including the Hartford return for a battery of steam boilers having the *condensate returned by a pump*, are shown in Fig. 23. Connections for a single boiler are shown in Fig. 24. The 90-deg elbow, short horizontal nipple, and tee at the top of the Hartford connection may be replaced by an inverted Y fitting if the condensate flows to the boiler by *gravity*. The point at which the condensate enters the equilizer pipe should be 4 in. below the normal water line when a pump is used and usually 2 to 4 in. for gravity return.

The inverted Y fitting should *not be used* if condensate is *returned by a pump* because the fitting may direct the condensate upward into the equalizer pipe where it will cause noise due to rapid condensation of some steam. Proper selection of the pump capacity and discharge pressure is required in any case because a pump may deliver water at such a high rate that steam and cold condensate are brought into contact and cause noise.

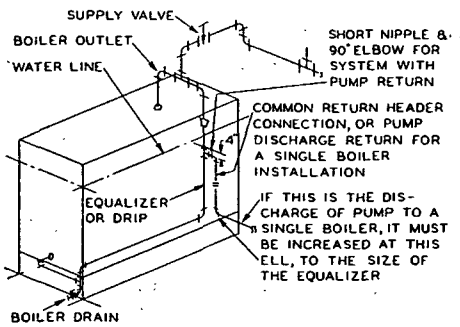

FIG. 24. BOILER PIPING INCLUDING HARTFORD RETURN CONNECTIONS

The size of equalizer recommended by the *Hartford Steam Boiler Inspection and Insurance Co.* is based upon grate area as follows: 1½, 2½, and 4 in. for grate areas of 4, 4 to 15, and over 15 sq ft respectively. It should not be less than the size of the main return piping from the system. The equalizer connection should be made as shown in Figs. 23 and 24 so that the steam flows toward it for best balance conditions. If the connection is such that the steam flows across the equalizer inlet, a lowered pressure will result at the inlet and tend to draw the condensate discharged by the pump into the steam thereby causing water hammer.

The condensate should enter the common return header of a battery of boilers midway between the end boilers. If the discharge line is more than 25 ft long, a check valve should be installed at the return header as shown in Fig. 23 in addition to the check valve at the outlet of the pump.

If the pump discharge is run at an elevation above the water line a spring-loaded check valve at the return header will keep the discharge line flooded and prevent water hammer which usually follows a system shut-down period.

Sizing Boiler Connections

Little information is available on the sizing of boiler runouts and steam headers. Although some engineers prefer an enlarged steam header to serve as additional steam storage space, there ordinarily is no sudden

demand for steam in a steam heating system, except during the heating-up period, at which time a large steam header is a disadvantage rather than an advantage. The boiler header may be sized by first computing the maximum load that must be carried by any portion of the header under any conceivable method of operation, and then applying the same schedule of pipe sizing to the header as is used on the steam mains for the building. The horizontal runouts from the boiler, or boilers, may be sized by calculating the heaviest load that will be placed on the boiler at any time, and sizing the runouts on the same basis as the building mains. The difference in size between the vertical uptakes from the boiler, which should be of same size as the boiler outlet tapping, and the horizontal main or runout, is compensated for by the use of reducing ells.

Return connections to boilers in gravity systems are made the same size as the return main itself. Where the return is split and connected to two tappings on the same boiler, both connections are made the full size of the return line. Where two or more boilers are in use, the return to each may be sized to carry the full amount of return for the maximum load which that boiler will be required to carry. Where two boilers are used, one of them being a spare, the full size of the return main would be carried to each boiler, but if three boilers are installed, with one spare, the return line to each boiler would require only half of the capacity of the entire system, or, if the boiler capacity were more than one-half the entire system load, the return would be sized on the basis of the maximum boiler capacity. As the return piping around the boiler is usually small and short, it should not be sized to the minimum.

With returns pumped from a vacuum or receiver return pump, the size of the line may be calculated from the water rate on the pump discharge when it is operated, and the line sized for a very small pressure drop. The relative boiler loads should be considered, as in the case of gravity return connections. Boiler header and piping sizes should be based on the total load.

CONDENSATE RETURN PUMPS

Condensate return pumps are used for gravity systems when the local conditions do not permit the condensate to return to the boiler under the existing static head. The return of the condensate permits the water to pass repeatedly through the cycle of vaporization, with subsequent condensation and return to the boiler. During such repeated cycles any incrustants or other substances in solution are precipitated and the water de-activated to a considerable extent, so that corrosion of a serious nature is seldom ever encountered where the condensate is repeatedly used. Serious corrosion is more frequently found in systems in which the condensate is wasted, and fresh make-up water is continually being introduced.

A generally accepted condensate pump unit for low pressure heating systems consists of a motor-driven centrifugal pump with receiver and automatic float control. Other types in use include rotary, screw, turbine and reciprocating pumps with steam turbine or motor drive, and direct-acting steam reciprocating pumps.

The receiver capacities of these automatic units should be sized so as not to cause too great a fluctuation of the boiler water line if fed directly to the boiler, and at the same time not so small as to cause too frequent operation of the unit. The usual unit provides storage capacity between stops in the receiver of approximately 1.5 times the amount of condensate returned per minute, and the pump generally has a delivery rate of 2 to 3