Lathe Operation

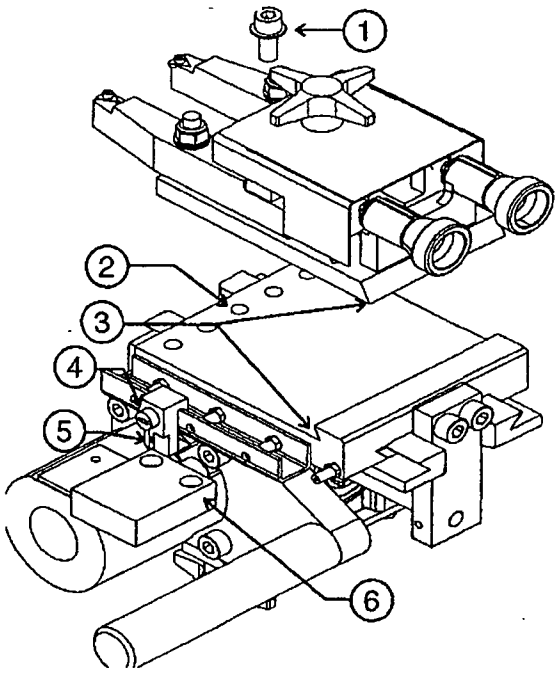

BSR084-A

Brake Lathe Parts

Item	Description	Item	Description
1	Set Screws	4	Cam Screw
2	Mount Holes (5)	5	Cam
3	Dovetail	6	Automatic Shutoff Switch

15. Center the cutting head to align with the brake rotor by loosening or removing the set screw and moving the cutting head.
    - The cutting head can be secured into any one of five holes.
    - The holes can fill up with metal chips, therefore clean out these holes before installing the set screw.
    - Also clean the dovetail area when you change the cutting head position.
16. Push the cutting head back into the dovetail so that it is square and tighten the set screw.
17. Set the automatic shut-off by first cranking the feed knob until the tool bits clear the outside edge of the rotor.
    - Loosen the shut-off cam screw and slide the cam back until it begins to contact the automatic shut-off switch plunger.
    - Tighten the cam screw.
18. Turn on the lathe. Make sure that the feed knob is in the disengaged position.