fitting standard, and for 300 lb steel flanges and flanged fittings, than those shown in the regular American Standards mentioned previously.

Screwed fittings include: nipples or short pieces of pipe of varying lengths; couplings of steel or wrought-iron; elbows for turning angles of either 45 deg or 90 deg; return bends, which may be of either the close or open pattern, and may be cast with either a back or side outlet; tees;

TABLE 6. AMERICAN STANDARD DIMENSIONS OF ELBOWS, 45-DEG ELBOWS, TEES AND CROSSES (STRAIGHT SIZES) FOR CLASS 125 CAST-IRON SCREWED FITTINGS, *ASA* B16a-1939

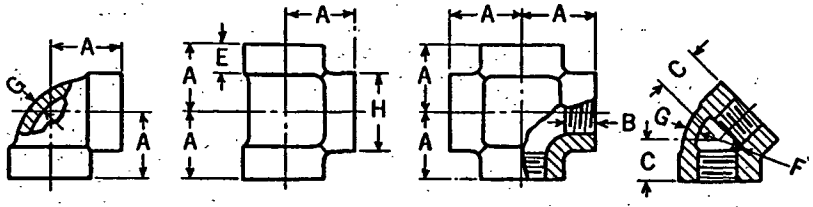

Nominal Pipe Size	A Center to End, Elbows, Tees and Crosses	C Center to End, 45 Deg Elbows	B Length of Thread, Min.	E Width of Band, Min.	F Inside Diameter of Fitting, Min.	F Inside Diameter of Fitting, Max.	G Metal Thickness,[a] Min.	H Outside Diameter of Band, Min.
¼	0.81	0.73	0.32	0.38	0.540	0.584	0.110	0.93
⅜	0.95	0.80	0.36	0.44	0.675	0.719	0.120	1.12
½	1.12	0.88	0.43	0.50	0.840	0.897	0.130	1.34
¾	1.31	0.98	0.50	0.56	1.050	1.107	0.155	1.63
1	1.50	1.12	0.58	0.62	1.315	1.385	0.170	1.95
1¼	1.75	1.29	0.67	0.69	1.660	1.730	0.185	2.39
1½	1.94	1.43	0.70	0.75	1.900	1.970	0.200	2.68
2	2.25	1.68	0.75	0.84	2.375	2.445	0.220	3.28
2½	2.70	1.95	0.92	0.94	2.875	2.975	0.240	3.86
3	3.08	2.17	0.98	1.00	3.500	3.600	0.260	4.62
3½	3.42	2.39	1.03	1.06	4.000	4.100	0.280	5.20
4	3.79	2.61	1.08	1.12	4.500	4.600	0.310	5.79
5	4.50	3.05	1.18	1.18	5.563	5.663	0.380	7.05
6	5.13	3.46	1.28	1.28	6.625	6.725	0.430	8.28
8	6.56	4.28	1.47	1.47	8.625	8.725	0.550	10.63
10	8.08[b]	5.16	1.68	1.68	10.750	10.850	0.690	13.12
12	9.50[b]	5.97	1.88	1.88	12.750	12.850	0.800	15.47

All dimensions given in inches.

[a] Patterns shall be designed to produce castings of metal thickness given in the table. Metal thickness at no point shall be less than 90 percent of the thickness given in the table.

[b] Applies to elbows and tees only.

crosses; laterals or *Y* branches; and a variety of plugs, bushings, caps, lock-nuts, flanges and reducing fittings. Reducing fittings as well as bushings, both of which are used in changing from one pipe size to another, may have the smaller connection tapped eccentrically to permit free drainage of the water of condensation in steam lines or free escape of air in water lines.

Fittings for copper tubing are available in the soldered, flared, or compression types. Illustrations of each of these types are shown in Fig. 2.

TABLE 7. AMERICAN STANDARD DIMENSIONS OF TEES, CROSSES[a] (STRAIGHT SIZES), AND ELBOWS FOR CLASS 125 CAST-IRON FLANGED FITTINGS, *ASA* B16a-1939

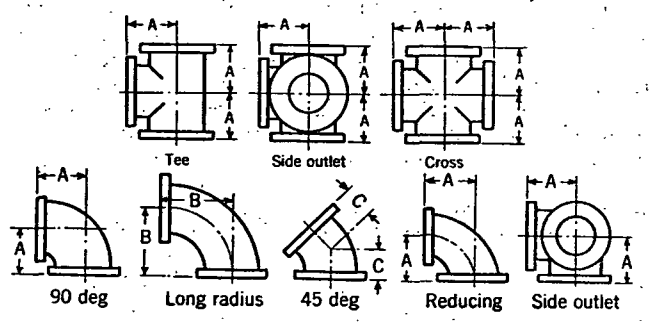

Nominal Pipe Size[b,e]	A Center to Face Tees, Crosses[c,d] and Elbows	AA Face to Face Tees and Crosses[c,d]	B Center to Face Long Radius Elbows[e,f,g]	C Center to Face 45 Deg Elbows	Diameter of Flange	Thickness of Flange, Min.	Metal Thickness of Body
1	3½	7	5	1¾	4¼	7/16	5/16
1¼	3¾	7½	5½	2	4⅝	1/2	5/16
1½	4	8	6	2¼	5	9/16	5/16
2	4½	9	6½	2½	6	5/8	5/16
2½	5	10	7	3	7	11/16	5/16
3	5½	11	7¾	3	7½	3/4	3/8
3½	6	12	8½	3½	8½	13/16	7/16
4	6½	13	9	4	9	15/16	1/2
5	7½	15	10¼	4½	10	15/16	1/2
6	8	16	11½	5	11	1	9/16
8	9	18	14	5½	13½	1⅛	5/8
10	11	22	16½	6½	16	1⅜	3/4
12	12	24	19	7½	19	1¼	13/16
14 O.D.	14	28	21½	7½	21	1⅜	7/8
16 O.D.	15	30	24	8	23½	1⅞	1
18 O.D.	16½	33	26½	8½	25	1⅞	1 1/16
20 O.D.	18	36	29	9½	27½	1 11/16	1⅛
24 O.D.	22	44	34	11	32	1⅞	1¼
30 O.D.	25	50	41½	15	38¾	2⅛	1 7/16
36 O.D.	28	56	49	18	46	2⅜	1⅝
42 O.D.	31	62	56½	21	53	2⅝	1 13/16
48 O.D.	34	68	64	24	59½	2¾	2

All dimensions given in inches.

[a] Crosses both straight and reducing sizes 18 in. and larger shall be reinforced to compensate for the inherent weakness in the casting design.

[b] Size of all fittings listed indicates nominal inside diameter of port.

[c] Tees, side outlet tees, and crosses, 16 in. and smaller, reducing on the outlet, have the same dimensions center to face, and face to face as straight size fittings corresponding to the size of the larger opening. Sizes 18 in. and larger, reducing on the outlet, are made in two lengths, depending on the size of the outlet.

[d] Tees and crosses, reducing on run only, carry same dimensions center to face and face to face as a straight size fitting of the larger opening.

[e] Reducing elbows and side outlet elbows carry same dimensions center to face as straight size elbows corresponding to the size of the larger opening.

[f] Special degree elbows, ranging from 1 to 45 deg, inclusive, shall have the same center to face dimensions as given for 45-deg elbows, and those over 45 deg and up to 90 deg, inclusive, shall have the same center to face dimensions as given for 90-deg elbows. The angle designation of an elbow is its deflection from straight line flow and is the angle between the flange faces.

[g] Side outlet elbows shall have all openings on intersecting center lines.

[h] Body thickness at no point shall be less than 87½ percent of the dimensions given in the table.