

ASBESTOSPRAY CORPORATION

High Temperature Insulation

MMBB-0006094

GENERAL SPECIFICATIONS FOR STEAM TURBINES

SURFACE PREPARATION:

The surfaces to be insulated must be thoroughly clean from any material, such as dust, oil, old insulation, or flaky rust which is apt to interfere with the proper bonding of Asbestospray's High Temperature Fiber insulation and the metal. Wherever nuts and bolt threads are to be protected, the applicator should cover them with asbestos cloth or paper, thus preventing the fiber from adhering to the threads. All open piping must be masked to prevent the osbestos fiber from entering the turbine.

SUPPORTS

It is recognized that supports will be necessary on the lower half of the turbine casing only. Supports on the upper half of the turbine are at the owner's option. Supports may be in the nature of the following:

Where permissible, rectangular 1 8" x 3 8" split pins as supplied by K.S.M. Division of Omark, or approved equal spaced approximately 18" on center should be welded to the casing by the manufacturer, owner or contractor.

Where welding is not permitted, the casing should be drilled for 1 4" studs or eye bolts in lieu of the welded pins. Speed washers are to be used with the studs. Heavy gauge tie wire, looped so as to form rabbit ears, can be used with the eyebolts.

When strap brackets are necessary, they are to be welded, when permitted, or fastened to the flange at the four quarter points.

APPLICATION

The application of Asbestospray's High Temperature fiber insulation to a turbine is a unique and interesting process. This is one of the few times it is recommended that the fibers be applied in more than one layer. This is done so as to assure the most efficient insulation coating possible. It is also important to note the special application procedures which must be followed to assure the owner a fast economical and successful insulation.

These procedures are as follows:

If you are to start on the bottom, select a suitable area (one which would act as a key) to start your spraying.

Apply the insulation so as to form a layer approximately 2½ inches thick. This initial layer is not pressed in the standard manner. The first 2½ inch coating is compressed with the sharp or knife edge so as to form a quilted pattern. This process provides a tightly knit insulation where it is needed most and at the same time provides a key where the succeeding layer will successfully knit with the primary layer of insulation.

When and where space permits, the whole casing should be done in this manner. This will permit heat to be introduced to the turbine, reducing the normal start-up time.

As the mechanic compresses the fiber with the sharp edge of his trowel, he starts his mechanical support of the insulation by bending one side of every second split pin, attaching a speed clip to every second stud or by pressing flat into the insulation one side of the rabbit ears.

03112120

The spray process now continues with the applicator building up the insulation coating until the unpressed thickness is approximately ½ to 1 inch above the specified or recommended thickness. The insulation is then lightly tamped or pressed with a wooden trowel or float, the edges of which have been rounded off so as to eliminate tool marks. If a fine finish is desired, an overspray of atomized water and stroking of the fiber surface with a finishing trowel will produce the desired effect. Care should be exercised, however, to hold the trowel in a slightly tilted position when stroking, or the trowel will dig into the yet soft coating.

Where an easy separation point around the flanges is desired for repair work, the fibers are applied so that the coating tapers into a feather edge at the flange. The fibers are then pressed and troweled smooth, at this point wetted asbestos paper is applied to the troweled surface and the spray process is now continued over the flange to complete the insulation of the turbine casing. It is known that while the asbestos paper will in no way affect the insulation coating, it does facilitate easy removal of the insulation around the flange.

In order to establish a uniform program of application, it is suggested that the insulation be applied in the following manner:

1. The underside of the turbine casing.

2. The steam transfer lines above the turbine casing.

3. The top half of the turbine casing.

4. The horizontal flange.

5. The steam mains.

6. The valve chests and auxiliaries.

03112121

IN RE: ABRAMS November 1992

UNITED ALLIS-CHALMERS NOVEMBER 1966

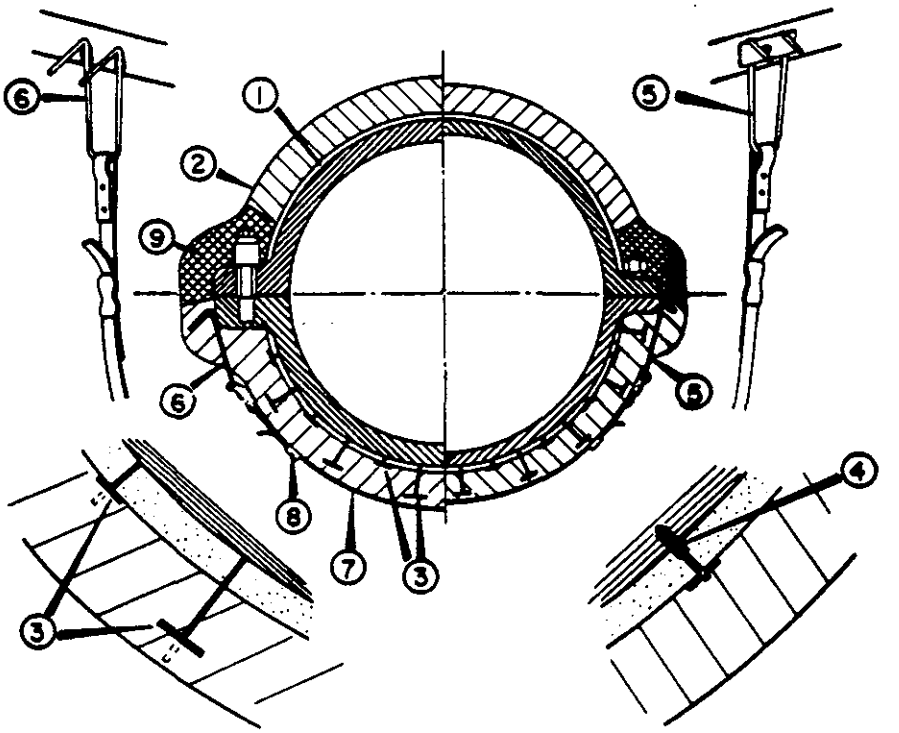

NOTES – 1. HIGH DENSITY LAYER.
2. NORMAL DENSITY.
3. KSM RECTANGULAR WELDING PINS 1/8" x 3/8" SPLIT BY THE PROPER LENGTH.
4. ALTERNATE: IF WELDING IS NOT PERMISSABLE, CASING TO BE DRILLED AND TAPED FOR STUDS AND SPEED WASHERS.
5. STRAP BRACKET SCREWED ON.
6. STRAP BRACKET WELDED ON.
7. S.S. STRAP 3/4" x .020" THICK.
8. SEAL.
9. SEPERATE FLANGE JOINT ISOLATION.

TURBINE
FINISH
1

03112122

IN RE: ABRAMS November 1992

HWBB-0006097

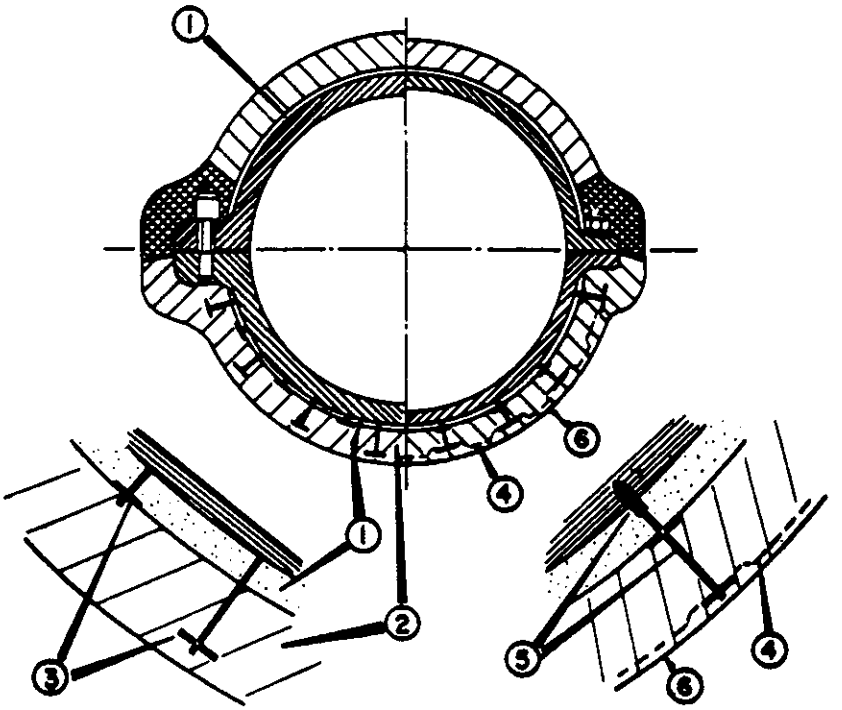

NOTES –
1. HIGH DENSITY.
2. NORMAL DENSITY.
3. KSM NO. 10 GA. PIN AND 1½" x 1½" SPEED WASHERS OR EQUAL.
4. 1" HEXAGONAL 20 GA. WIRE MESH.
5. ALTERNATE: IF WELDING IS NOT PERMISSABLE, CASING TO BE DRILLED AND TAPPED FOR STUDS AND SPEED WASHERS.
6. FINISHING CEMENT

TURBINE
FINISH
2

03112123