COMPANY CONFIDENTIAL

ANNISTON AROCLOR CLEAN-UP

Engineering Parameters and Recommendations

for

Eliminating PCB Loss to the Environment

Johnnie Etheredge

April 28, 1971

0356594

TOWOLDMON0057529

Aroclor Removal Devices

1. Curbing around drumming and blending areas
2. Use buckets and pans for small leaks until repaired
3. Use adsorbents to clean up spills -- Anniston uses Oil Dry (trade name)
4. Use buckets at sample ports
5. Do not use detergents for clean up
6. Segregate contaminated and uncontaminated water
7. Carbon towers to remove PCB from product HCl acid
8. Brink mist eliminators in off-gas lines drop PCB back into process
9. Condensers in off-gas lines, PCB recycled
10. Catch tanks in vapor lines
11. Drowning jets for vapors before emission to atmosphere
12. Keep vessels buttoned up
13. Use a sump in effluent line
14. Limestone pit -- HCl is present in effluent
15. Carbon adsorption of Aroclor from plant effluent
16. Evaluation in progress -- Aroclor adsorption on a less expensive adsorbent than carbon

0356595

TOWOLDMON0057530

AROCLOR WASTE SUMP

The purpose of an Aroclor waste sump is to separate and collect entrained Aroclor from the waste effluent. Aroclor (PCB) existing as a second phase may be removed from the waste stream through the use of a properly designed and operated sump.

Leaks and spills are generally major contributors to effluent contamination. Because Aroclor is heavier than, and almost insoluble in water (solubility of 300 to 400 ppb), a correctly designed sump will efficiently collect entrained Aroclor. A sump presently used at Monsanto's Anniston, Alabama plant in the Aroclor manufacturing process effluent stream yields an effluent below Aroclor solubility level.

The sump operates with an inlet stream flow of approximately 250 gpm containing HCl, Aroclors, process water and grit washed through the sewer system. The Aroclor removed (plus the solid grit material washed in through the sewer system) is collected in the bottom portion of the sump and pumped out at three month intervals, unless of course a major spill should occur.

The sizing of a sump is usually done by one of two methods or a mixture of both. The classical theoretical approach of determining settling velocities requires that both particle size and density must be known. The classical approach becomes complex because each type of Aroclor has a different particle size and density. For this reason a generalized approach, applicable to the range of Aroclor products produced at Anniston, has been developed for sizing a sump to collect this range of Aroclors.

The generalized approach combines these variables in a constant "k" called the sizing factor. The sizing factor along with the flow rate will give a surface area sufficient for settling Aroclor if the flow is evenly distributed along the inlet end of the sump. Space availability, terrain and other physical limitations can determine the width and length appropriate to the calculated surface area. Remember -- for efficient operation the inflow must be evenly distributed along the inlet end of the sump.

Formula: $S.A. = \frac{F.R.}{k}$

Where: $S.A.$ = Surface area in $ft.^2$

$F.R.$ = Flow rate in gallons per minute

$k = 1.66 \frac{gal.}{Min.\ ft.^2}$ = sizing factor

0356596

TOWOLDMON0057531

Example: Anniston sump design

F.R. = 250 gpm

$$\text{Therefore: } S.A. = \frac{250 \frac{\text{gal.}}{\text{min.}}}{1.66 \frac{\text{gal.}}{\text{Min.} \cdot \text{ft.}^2}}$$

$$S.A. = 150.6 \text{ ft.}^2$$

Anniston sump is 10 ft. by 15 ft., or S.A. = 150 ft.^{2}.

Three important factors to be considered in determining the depth of the sump are maximum possible spill, frequency of clean-out and turbulence created by incoming flow. The maximum possible spill can be determined by examination of the processing unit. Frequency of clean-out can be determined by available manpower and equipment. Correct distribution of the inlet flow across the inlet side of the sump will minimize the turbulence. There are several methods of distributing the flow. The Anniston sump has three inlet streams entering below the liquid level. An examination of the cut-away sketch #1 in Appendix A will explain the principle. A minimum vertical separation of 2 to 3 feet should be maintained between settled material and influent stream. The inflow enters the sump below the liquid surface to prevent mixing of floating organics that may appear.

The operation of a sump is simple and for that reason the necessary precautions for efficient operation are often overlooked or conveniently pushed aside for later consideration. However, to maintain efficient removal of Aroclor, caution should be exercised during operation of the sump. A few potential problems that may occur are listed below.

Potential Problems:

1. Solids washing into sump will be collected and, depending on character of solids, could be a problem in removal.

2. Regular cleaning is required to avoid overfilling the storage capacity for Aroclor.

3. Introduction of detergents or emulsifying agents (e.g., floor cleaning) will have a serious deleterious effect on sump efficiency.

4. Prolonged periods of operation at flow rates higher than design capacity will result in decreased efficiency.

5. A sump alone will not remove materials lighter than water.

6. Care must be taken to prevent stirring of the settled Aroclor if cleaning is attempted while the pit is in operation.

7. A floating organic film with a high Aroclor content may appear on the sump surface.

These are only a few problems that must be considered if a continuously efficient operation is to be achieved.

0356597

TOWOLDMON0057532

Construction Details:

The solids that are washed into the sump create a problem when an attempt is made to remove the collected Aroclor. A sump pump that will handle the solids should be installed. Anniston uses the services of a commercial septic tank cleaner (Honeywagon). Neither a sump pump nor a Honeywagon removes all solids unless the pit is stirred. Therefore, a periodic shutdown of the sump is needed to achieve a thorough cleaning.

To prevent floating organics and trash from leaving the sump an underflow arrangement is used (see sketch #1, Appendix A). Because the floating film has a high Aroclor content a surface type skimmer is used in the Anniston sump. The surface skimmer used at Anniston is a model 610 Brill skimmer manufactured by Oil Skimmers, Inc., Cleveland, Ohio (see Appendix B). The tubing used by Anniston in the skimmer is Tygon R-3603 manufactured by U. S. Stoneware and lasts approximately four weeks per tube during continuous 24 hour service.

The Anniston sump has an acid brick and leak-proof membrane lining because the waste stream is slightly acidic. If the waste stream is not acidic, leak-proof concrete walls and floor are sufficient. ACI Standard Building Code was used for all reinforced concrete. A description of the acid brick and leak-proof membrane follows.

0356598

TOWOLDMON0057533

Size:

Width - 10 FT
Length - 15 FT
Depth - 14 FT. Dictated by depth of existing influent pipe and factors stated earlier.

Material of construction:

Acid brick lined reinforced concrete [slightly acidic stream]
Acid resistant membrane between brick and concrete

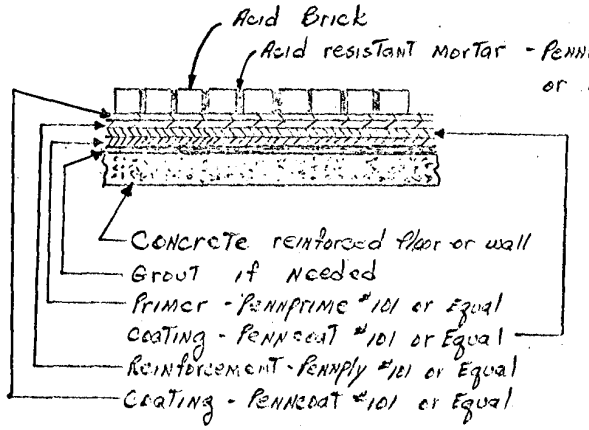

0356599

TOWOLDMON0057534

APPENDIX A

#1

ANNISTON AROCLOR WASTE SUMP

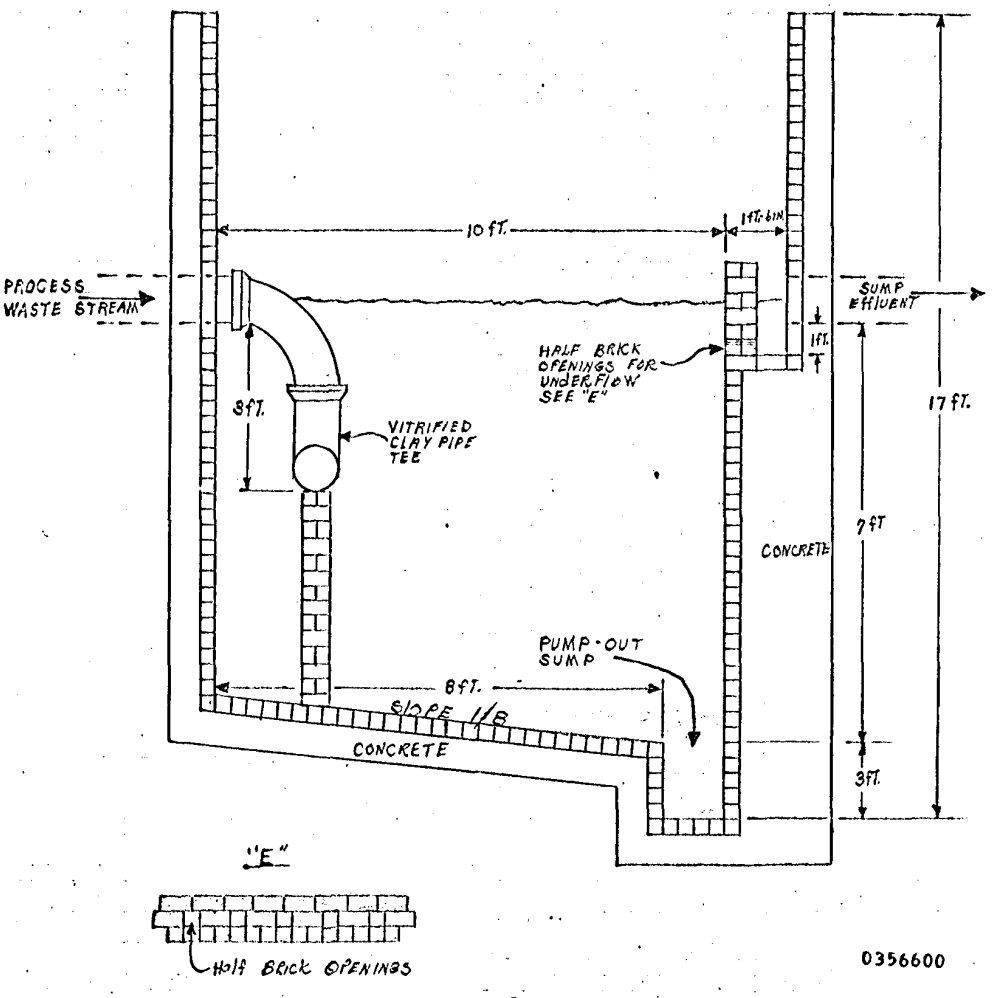

0356600

Johnnie Etheredge 3/25/71

TOWOLDMON0057535

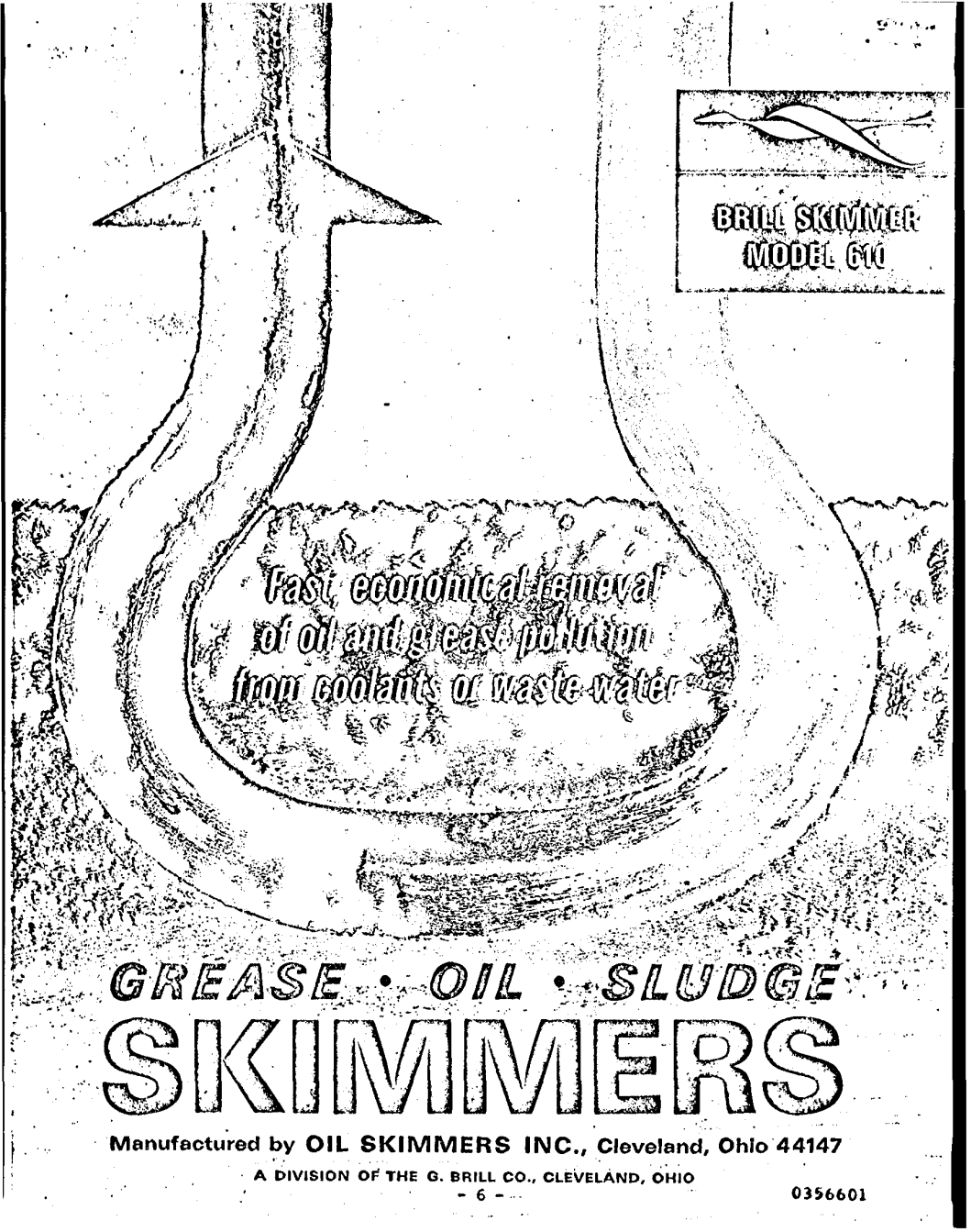

GREASE • OIL • SLUDGE

SKIMMERS

Manufactured by **OIL SKIMMERS INC.**, Cleveland, Ohio 44147

A DIVISION OF THE G. BRILL CO., CLEVELAND, OHIO

0356601

TOWOLDMON0057536

BRILL SKIMMER
MODEL 610
PATENTED

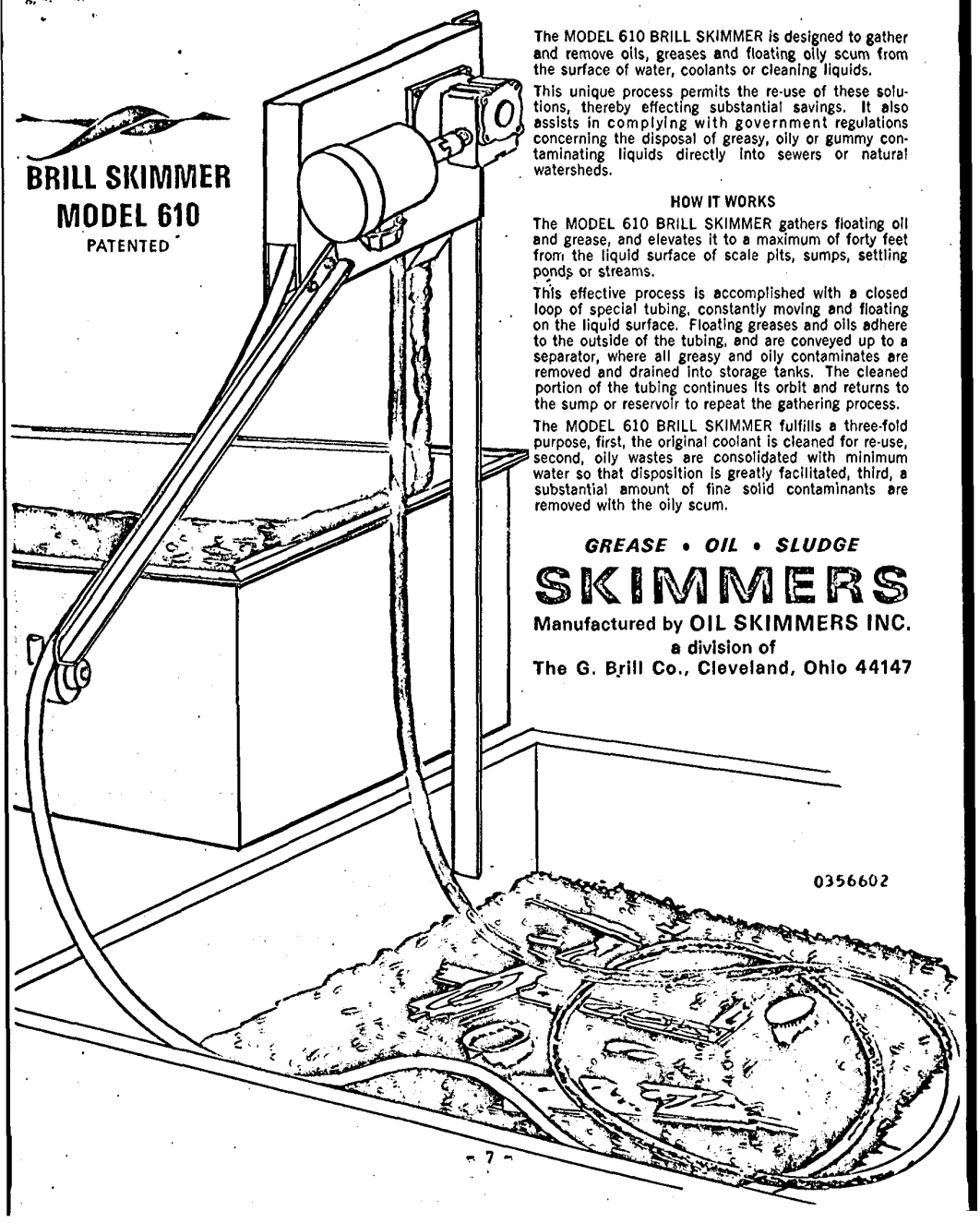

The MODEL 610 BRILL SKIMMER is designed to gather and remove oils, greases and floating oily scum from the surface of water, coolants or cleaning liquids.

This unique process permits the re-use of these solutions, thereby effecting substantial savings. It also assists in complying with government regulations concerning the disposal of greasy, oily or gummy contaminating liquids directly into sewers or natural watersheds.

HOW IT WORKS

The MODEL 610 BRILL SKIMMER gathers floating oil and grease, and elevates it to a maximum of forty feet from the liquid surface of scale pits, sumps, settling ponds or streams.

This effective process is accomplished with a closed loop of special tubing, constantly moving and floating on the liquid surface. Floating greases and oils adhere to the outside of the tubing, and are conveyed up to a separator, where all greasy and oily contaminates are removed and drained into storage tanks. The cleaned portion of the tubing continues its orbit and returns to the sump or reservoir to repeat the gathering process.

The MODEL 610 BRILL SKIMMER fulfills a three-fold purpose, first, the original coolant is cleaned for re-use, second, oily wastes are consolidated with minimum water so that disposition is greatly facilitated, third, a substantial amount of fine solid contaminants are removed with the oily scum.

GREASE • OIL • SLUDGE

SKIMMERS

Manufactured by OIL SKIMMERS INC.
a division of
The G. Brill Co., Cleveland, Ohio 44147

0356602

TOWOLDMON0057537

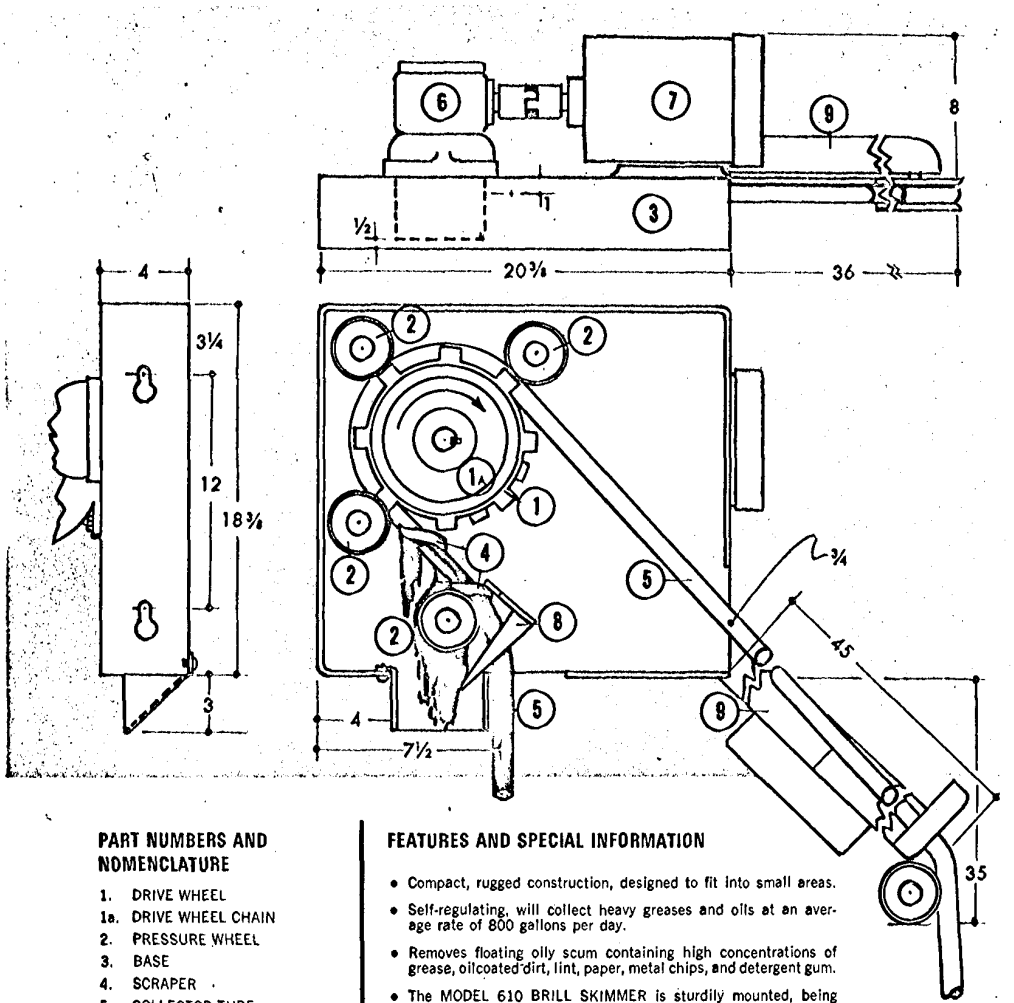

PART NUMBERS AND NOMENCLATURE

1. DRIVE WHEEL
1a. DRIVE WHEEL CHAIN
2. PRESSURE WHEEL
3. BASE
4. SCRAPER
5. COLLECTOR TUBE
6. REDUCER
7. ELECTRIC MOTOR, ½ hp/ 1725 rpm/TEFCBB
   - 230/440 volt, 3 ph. 60 cycles
   - 115/230 volt, 1 ph. 60 cycles
8. TUBE GUIDE
9. OUTRIGGER

FEATURES AND SPECIAL INFORMATION

- Compact, rugged construction, designed to fit into small areas.
- Self-regulating, will collect heavy greases and oils at an average rate of 800 gallons per day.
- Removes floating oily scum containing high concentrations of grease, oilcoated dirt, lint, paper, metal chips, and detergent gum.
- The MODEL 610 BRILL SKIMMER is sturdily mounted, being bolted to a 4" x 4" angle iron, which is secured to the edge of the sump or collection pit.
- To determine the length of collector tube needed for your application, this simple formula is recommended:

  DOUBLE THE AMOUNT OF HOSE NEEDED TO EXTEND FROM THE BRILL SKIMMER UNIT, TO THE LOWEST AVERAGE LIQUID LEVEL IN THE PIT, THEN ADD 12 ADDITIONAL FEET, this will allow adequate tube surface when the liquid level fluctuates, permitting tube to float over and around debris, trash or any floating objects in the pit without tangling.

distributed by

OIL SKIMMERS INC.
a division of THE G. BRILL CO., CLEVELAND, OHIO 44147
Phone: 216-237-6181
216-946-7747

0356603

TOWOLDMON0057538

INSERTING TUBING IN MODEL 610 BRILL SKIMMER

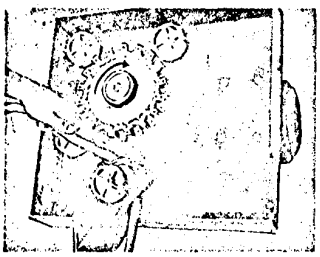

A. Remove backplate, apply power and check direction of rotation.

B. Squeeze new tubing under tube guide ⑧ lift up helical scraper ④ and wind in tubing.

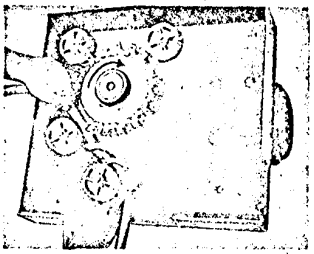

A. Place tubing between outside sprocket teeth on drive wheel ①

B. Rotate motor coupling until tubing passes under pressure wheel ② insert tube between inner and outer rows of teeth on drive wheel ① up to the next pressure wheel ②

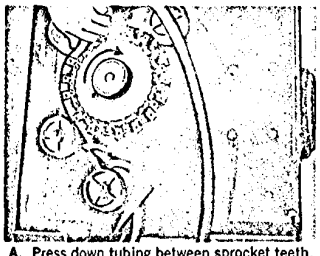

A. Press down tubing between sprocket teeth, and continue to rotate drive wheel ① in proper direction until tubing is past second pressure wheel ②

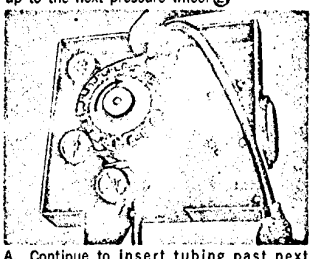

A. Continue to insert tubing past next pressure wheel ② by repeating previous instructions.

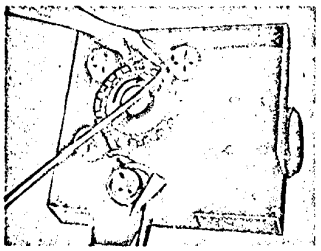

A. Repeat previous instructions.

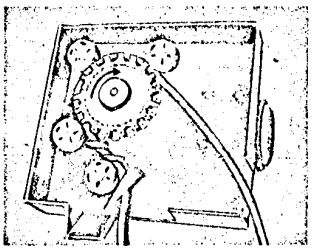

A. Tubing is now in proper position on drive wheel ① and is ready to be placed on outrigger ⑨

CHECK LIST Tubing in proper opening at right of spout — under tube guide ⑧ — through helical scraper ④ — between inner and outer teeth of drive wheel ① — firmly held in place by four pressure wheels ② — place tubing in opening on right side, extend along outrigger ⑨ through the guide yoke, and over the outboard wheel. **Unit is now ready for operation . . . be certain that motor will drive unit in proper direction.**

OIL SKIMMERS INC.

1803 W. ROYALTON ROAD • CLEVELAND, OHIO 44147

A DIVISION OF THE G. BRILL CO. • CLEVELAND, OHIO

0356604

TOWOLDMON0057539

AROCLOR REMOVAL - HCL LIMESTONE NEUTRALIZATION PIT

Introduction:

The Monsanto, Anniston, limestone neutralization pit serves a dual role -- neutralization of waste Muriatic Acid (HCl) and removal of both dissolved and entrained Aroclor. Limestone neutralization is satisfactory in Anniston's case since the HCl does not form insoluble salts with the limestone. The limestone quarried and crushed within 30 miles of the plant site represents the most economical alkali source in Anniston's particular case.

Neutralization of the waste HCl is accomplished by gravity feeding aqueous HCl through a bed of limestone rock. The removal of Aroclor is effected in two methods. First, the limestone pit serves as a large settling basin to collect entrained Aroclor. Second, the soluble Aroclor is apparently adsorbed by finely divided inert residue freed from the limestone rock during neutralization of the aqueous HCl.

The effectiveness of the limestone pit in removing Aroclor was determined by laboratory analysis. Analysis of samples taken daily over a four month period of both the influent and effluent revealed a very significant drop in Aroclor levels across the Anniston limestone pit. At the present time, daily analysis of the pit effluent indicates average Aroclor levels far below the solubility level (300 to 400 ppb) of Aroclor. However, the low numbers cannot be maintained if detergents, emulsifiers or solvents are present in the effluent. In other words, any agent that increases the amount of soluble Aroclor in the waste stream decreases the amount of Aroclor removed by the limestone pit.

Size and Analysis of Limestone:

Anniston uses two sizes of limestone -- #2 and #6. The #6 is small: 5% passes through a 3/8 in. screen and 100% passes through a 1 in. screen. The small rock (#6) neutralizes the HCl quicker than the #2 limestone because it has more effective surface area. However, if the #6 is not handled with caution it will compact in the pit and a loss of pit size and life will be realized. The #2 limestone is 1 in. to 2 1/2 in. in size. Neutralization takes a little longer but the compaction problem is minor. At the present time Anniston is using the small #6 limestone in the first 20 ft. of the neutralization chamber and the large #2 limestone in the rest of the neutralization chambers. A chemical analysis of the limestone used in the Anniston HCl neutralization pits is as follows:

SiO_2 Plus Insolubles	R_2O_3	$CaCO_3$	$Mg\ CO_3$
2.446	0.80	93.459	3.116

Sizing of Limestone Pits:

The shape and size of limestone pits used by Monsanto, Anniston, were developed for a specific set of variables and conditions present in the Anniston Plant. No known set group of theoretical equations will logically fit the sizing of the type of pits used by the Anniston operation.

0356605

TOWOLDMON0057540

The numerous variables to be considered in sizing a limestone pit requires methods other than theoretical formulas. Flow rate, HCl concentration, Aroclor concentration, length of pit life desired, available property for pit, chemical analysis of limestone, size of limestone available, efficiency desired for Aroclor removal, HCl neutralization efficiency and material other than HCl and Aroclor in the effluent stream are a few of the many variables involved. An effective and efficient limestone pit operation depends entirely on a thorough investigation of each variable. Therefore, it is recommended that a pilot model be operated before a full scale operation is installed.

Although it is not recommended to use the Anniston operation as a proportional method of sizing other operations, it may be of value to know a few Anniston variables. These items may give an idea of what to expect.

1. Waste influent
   a. Flow - 700 gpm avg.
   b. HCl concentration - 1% approx.
2. Retention time for neutralization - 15 to 20 min.
3. Total pit retention time - 25 min. avg.
4. Effluent from limestone pit
   a. Solids
      (1) 50 ppm avg.
      (2) 1.5 to 250 microns
   b. 100 ppb PCB avg.

Description of Facility:

Monsanto Anniston has two limestone pits designed and located for continuous operation. A flow diagram (fig. 1) shows how the pits are arranged and connected together for simultaneous or individual operation. For clarity in description the pits are numbered pit #1 and pit #2.

Reading the description of the two pits will reveal a discrepancy in size and arrangement of baffle walls. Although the pits are not identical they both work reasonably well. Experimenting in the field as to the best method of size and arrangement caused the discrepancies. Presently the recommended approach is pit #1 for operation and efficiency.

0356606

TOWOLDMON0057541

Figure 1

ANNISTON LIMESTONE PITS

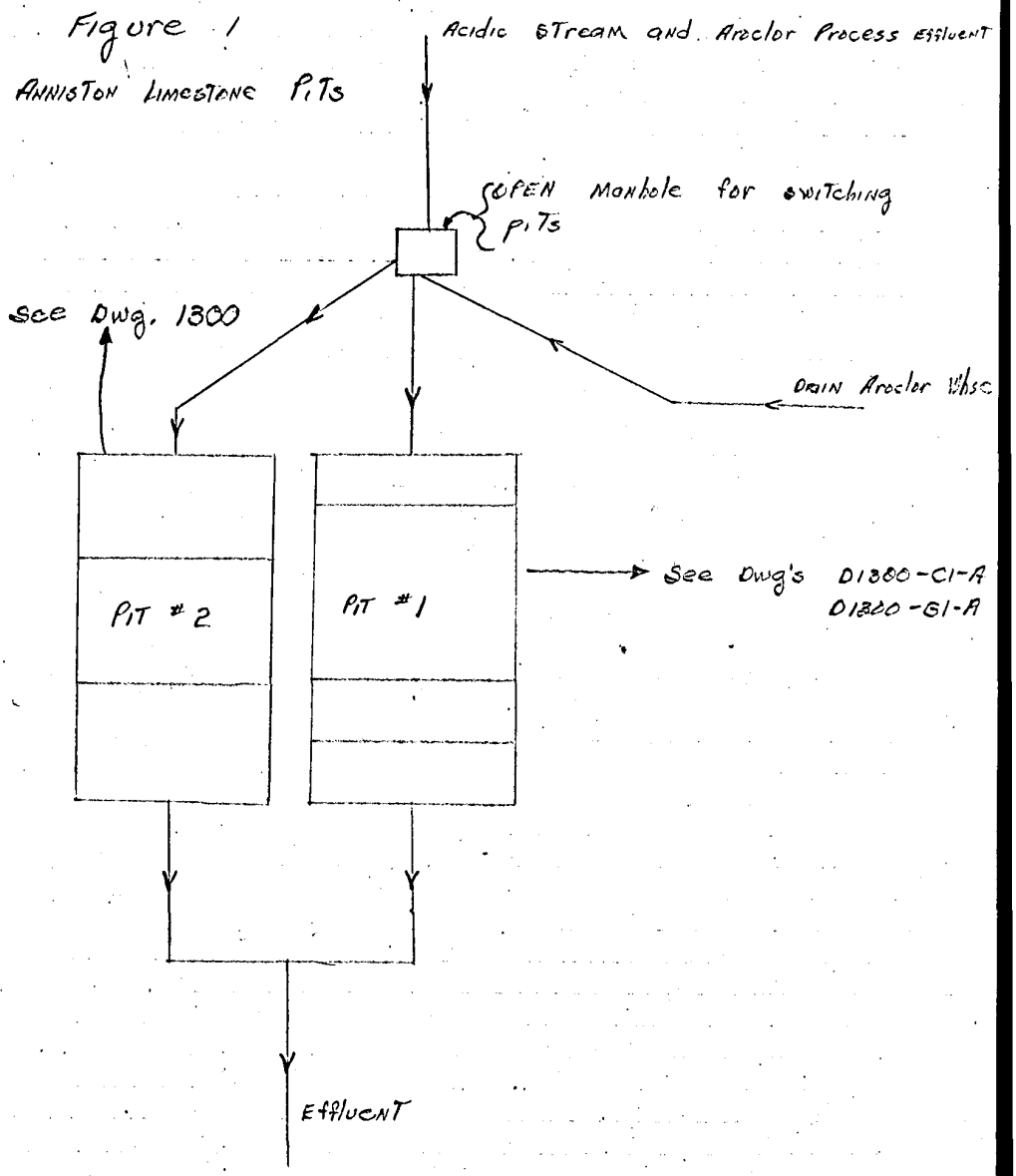

0356607

TOWOLDMON0057542

Limestone Pit #1

Fig. #2
Dwgs. D1300-C1-A
D1300-G1-A

Limestone pit #1 originally built for HCl neutralization only is presently, after minor revisions, used for neutralization and Aroclor removal. The physical dimensions and characteristics of pit #1 are as follows:

The influent flow measurement weir is a 6 ft. by 7 ft. acid resistant brick-lined reinforced concrete box with a 12 in. wooden 90° V-notch weir.

The grit chamber measures 32 ft. wide by 20 ft. long at the top with 1:3 side slopes. The depth of the grit chamber is 4 ft. The walls and bottom are reinforced concrete. Baffle "A" is an overflow baffle that forms the downstream end of the grit chamber. The baffle is made of reinforced concrete 1 ft. thick by 32 ft. long by 5 ft. deep.

The neutralization chamber is 120 ft. long by 50 ft. wide at the top with 1:3 side slopes and 7 ft. deep. The neutralization chamber is the only portion of pit #1 to be filled with limestone.

Baffle "B" is an underflow baffle. See drawing D1300-C1-A for description.

The settling basin has two compartments. The first compartment is a 17 ft. continuation of the neutralization chamber void of limestone. The second compartment is a reinforced concrete box 14 ft. long by 27 ft. wide and 10 ft. deep. The second compartment is sloped 1 ft. in 7 ft. from upstream to downstream end of the basin. A perforated suction pipe is used at the low end to pump inerts coated with Aroclor from the pit. Effluent leaves the pit in an overflow standpipe. The elevation of the standpipe controls the level in the pit.

The entire pit is coated with Lion P_2O_5 cat asphalt. The neutralization chamber has a 12 in. protective sand cover over the asphalt. See Appendix for Lion Technical Bulletin CA for subgrade preparation and application of the asphalt.

0356608

TOWOLDMON0057543

Fig #2

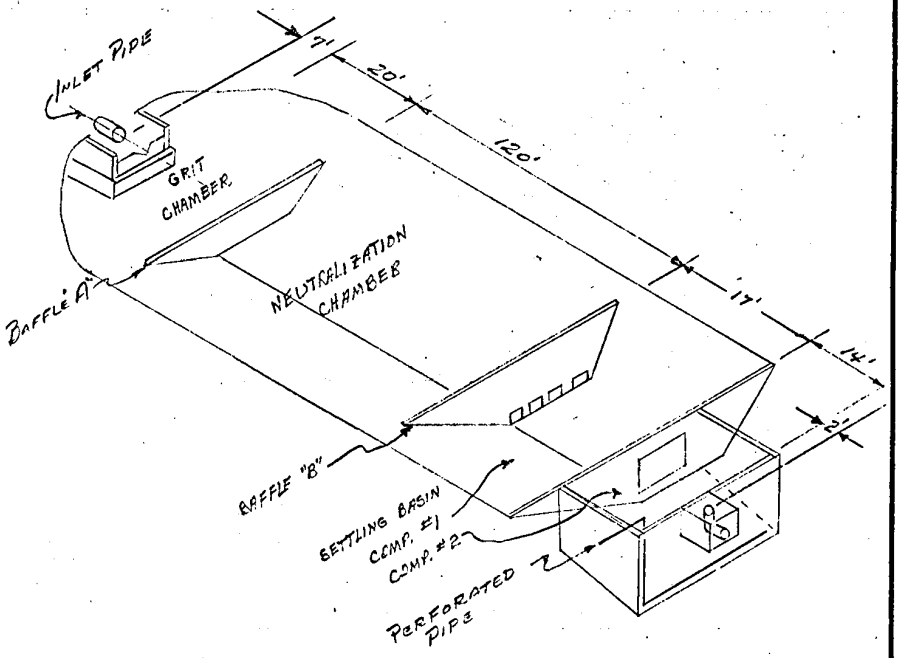

NOTICE: This drawing is the property of Monsanto Company and must be returned, without reproduction or duplication, at any time upon request, but in any event at completion of the work or job. While in the possession of the recipient, it must be properly safeguarded against revelation or disclosure to any one except those employes who require it for the work or job. The recipient must keep confidential, and require his (its) employes to keep confidential, the information contained hereon.

COMPANY CONFIDENTIAL
This drawing is the property of Monsanto Company and must be accounted for. Information hereon is confidential and must not be reproduced, revealed to unauthorized persons or sent outside the company without proper authorization.

TSD – MONSANTO COMPANY – ANNISTON, ALA.

0356609

TITLE					AUTH. NO.
#1 LIMESTONE PIT - 14 -					JOB NO.
DRAWN BY	APPROVED	DATE	SCALE	DEPT.	
RLB	Johnnie Etheredge	3/19/71	NONE		TS-A

GILVIE PRESS DIVISION GRAPHIC CONTROLS CORP., BROOKLYN, N. Y. 11217 STOCK NO. 450 11888

TOWOLDMON0057544

Limestone Pit #2

Fig. #3
Dwg. 1300

Pit #2 is 200 ft. long by 60 ft. wide at the top with 1:4 side slopes and approximately 6 ft. deep. The influent stream is distributed across the width of the pit through an 18 in. perforated Flextran pipe.

The Flextran pipe, product of Johns-Manville Company, was perforated by Anniston personnel for the expected flow in the Anniston Plant. The perforations are 2 in. holes 1 ft. apart.

Baffle "A", 66 ft. 6 in. from the distributor, is an overflow baffle. Baffle "B", 66 ft. 6 in. downstream of "A", is an underflow baffle. See drawing 1300 for details.

All of the pit from distributor to baffle "B" is filled with limestone. The last section of the pit from baffle "B" to the overflow has 30 ft. of limestone and 36 ft. of settling area.

Effluent leaves the pit through a wooden 12 in. 90° V-notch weir.

The entire pit, dirt surfaces and exposed concrete, are coated with asphalt.

0356610

TOWOLDMON0057545

Fig #3

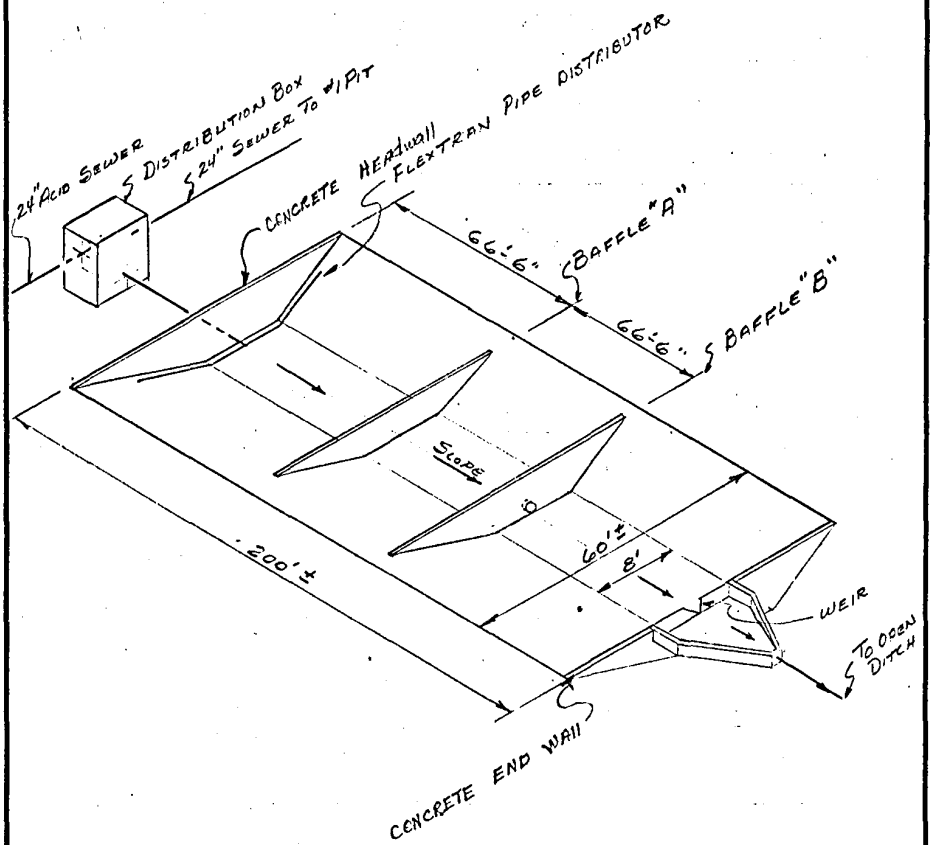

NOTICE: This drawing is the property of Monsanto Company and must be returned, without reproduction or duplication, at any time upon request, but in any event at completion of the work or job. While in the possession of the recipient, it must be properly safeguarded against revelation or disclosure to any one except those employes who require it for the work or job. The recipient must keep confidential, and require his (its) employes to keep confidential, the information contained hereon.

COMPANY CONFIDENTIAL
This drawing is the property of Monsanto Company and must be accounted for. Information hereon is confidential and must not be reproduced, revealed to unauthorized persons or sent outside the company without proper authorization.

TSD – MONSANTO COMPANY – ANNISTON, ALA.

0356611

TITLE	AUTH. NO.
#2 Limestone Pit	JOB NO.

DRAWN BY	APPROVED	DATE	SCALE	DEPT.	
RLB	Johnnie Etheredge	5/19/71	None		TS-A

©GILVIE PRESS DIVISION GRAPHIC CONTROLS CORP., BROOKLYN, N. Y. 11217 STOCK NO. 450 11599

TOWOLDMON0057546



Close up view of tough and flexible P_2O_5 "cat" asphalt membrane lining applied on large canal project in Wyoming.

Technical Bulletin *CA* Published by Lion Oil Company, El Dorado, Arkansas

The old cliche that "History repeats itself" is certainly true in regard to the use of asphalt down through the years. The Babylonian and Sumerian civilizations of 2500 B.C. found native asphalts the only answer to waterproofing problems in their temples and palaces. Man of the 20th Century also is finding asphalt the most satisfactory and economical answer to some of his greatest problems. Modern improvements in petroleum refining and intensive research have developed petroleum asphalts of many types, and from them have come asphaltic products especially designed to serve many needs in the world of today.

One of the newest developments from the petro-chemical laboratory is catalytically blown asphalt, or "cat" asphalt as it is commonly called. Originated and developed by the Lion Oil Company under patent No. 2,450,756, catalytically blown asphalt, using phosphorous pentoxide as the catalyst, has been widely adopted throughout the United States as a principal material for controlling seepage in irrigation canals and water supply systems.

One of the most serious problems of the modern world is the drying up of streams and the consequent lowering of water tables, necessitating construction of irrigation canals, water storage pits, and the damming of rivers to serve as reservoirs. Before the discovery of "cat" asphalt, irrigation engineers found a great deal of water being lost through seepage, and they tried many methods in an effort to control the wastage. The water which seeps from canals and irrigation ditches is not only lost, but usually collects in lower ground areas, rendering such areas unproductive or necessitating the installation of expensive drainage systems. In 1949, the U. S. Bureau of Reclamation estimated that of the 15,650,000 acre-feet of water supplied for irrigation, 3,900,000 acre-feet, or 25 per cent, were lost in transit. With the advent of "cat" asphalt as the ideal low-cost canal liner, much of this waste has been eliminated.

For canal linings, "cat" asphalt is used to produce a thick, tough, waterproof membrane, formed by spraying the very hot (400°F.) asphalt on the earth's surface. This type of asphalt, now manufactured by a number of licensees, has been applied to over 6.5 million square yards of canals and reservoirs for seepage control during the past five years, and its use is constantly expanding as new needs are found for this versatile material. Extensive tests made by the U. S. Bureau of Reclamation in connection with canal lining construction, using the Lion catalytically blown asphalt, have shown the product to have unusual durability characteristics as well as a toughness and flexibility which make it unexcelled for this purpose. Experience has shown that, not only is this type of construction probably one of the most efficient means ever developed for the control of seepage, but it is the most economical both in initial cost and in length of service.

Although originally developed for the control of seepage of irrigation water in canals and reservoirs, newer uses include control of industrial wastes, preventing pollution of ground waters, the leak-proofing of sewage disposal ponds, the lining of reservoirs for the settlement and filtration of municipal water supplies, and erosion control on beaches and farm lands.

A most interesting application of "cat" asphalt is in connection with the fascinating development of underground storage for butane-propane hydrocarbons. In Scurry County, Texas, near Snyder, the underlying salt domes become excellent gas storage reservoirs by the simple expedient of pumping water into the salt domes, dissolving the salt, and bringing the brine back to the surface to be stored in pits lined with "cat" asphalt. This brine can be injected back into the reservoirs to lift the stored gases to the surface for commercial use during the periods of heavy demand. Lion Oil Company, Sunray Oil Company, Scurry Butane Products Company and Phillips Petroleum Company are among those who are using "cat" asphalt as a liner in such brine ponds. This method of storing the brine prevents the pollution of the surrounding soil and saves precious water for reuse, making possible an economically feasible operation.

One of the latest developments in the use of membrane asphalts is the stabilization of natural soils under highway and airfield pavements by enveloping or "wrapping up" these soils in membranes of "cat" asphalt. Simple, efficient and durable beyond all normal requirements, yet low in cost, this method of pavement design promises to revolutionize the work of the highway engineer, allowing the construction of fast, smooth, high load-carrying highways and air fields at a fraction of today's cost.

The requirements for membrane asphalt as specified by the U. S. Bureau of Reclamation are as follows:

The asphalt for the asphaltic membrane shall be catalytically blown asphalt cement and shall conform to the following specifications—

(a) **Materials**—The materials supplied under this specification shall be asphalts prepared only by the catalytic-

*U. S. Patent Number 2,450,756

0356612

TOWOLDMON0057547

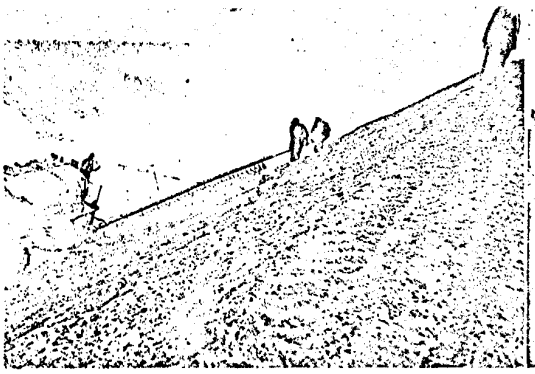

Rapid coverage of large areas with P_2O_5 "cat" asphalt is made easy by attaching the spray bar directly to distributor. (Riverton Project, Pavillion, Wyo.)

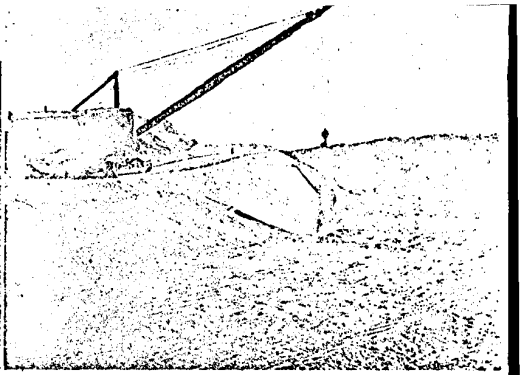

Dragline casts earth cover over completed membrane lining in major irrigation canal project to supply water so necessary to growing of crops in the West.

blowing treatment of asphaltic petroleum. Asphaltic materials for which ferric chloride or other compounds of iron have been used as catalysts in the blowing operation, will not be acceptable.

(b) **General requirements**—The asphalt shall be homogenous, free from water, and shall not foam when heated to 347°F.

(c) **Detailed requirements**—Catalytically blown asphalt shall meet the requirements shown below:

Flash Point (C.O.C.), min.	425°F.
Softening Point (R&B)	175° to 200°F.
Penetration at 77°F., 100 g., 5 sec.	50-60
Penetration at 32°F., 200 g., 60 sec., min.	30
Penetration at 115°F., 50 g., 5 sec. max.	120
Ductility at 77°F., 5 cm. per minute, min.	3.5 cm
Loss at 325°F., 5 hours, max.	1.0%
Penetration after loss on heating, 77°F., 100 g., 5 sec., % of original, min.	60.0%
Bitumen (soluble in carbon tetrachloride), min.	97.0%

APPLICATIONS—Construction requirements are considered under 4 general classes: (1) Seepage Control, (2) Seepage and Erosion Control, (3) Erosion Control, and (4) Soil Stabilization.

SEEPAGE CONTROL

Efficient, economical seepage control can be obtained by the use of the simple "cat" asphalt membrane. This membrane is constructed by spraying the hot "cat" asphalt directly on the prepared, smooth subgrade, and then covering the cooled membrane with a layer of soil or gravel.

PREPARATION OF SUBGRADE—New canals and reservoirs must be excavated to allow for the thickness of the earth cover over the membrane. Many old canals are already oversize as a result of erosion, so that frequently no over-excavation is necessary. For application purposes it is not necessary to trim the canal to any exact cross-section, so that in many cases much earthwork can be saved by using essentially the existing canal or reservoir. However, in both canals and storage pits, side-slopes must not be steeper than 1-3/4:1; otherwise, sloughing of the soil cover over the membrane may occur. In some cases, if the cover soil is particularly unstable, slopes of 2:1 are desirable. Subgrades should be smooth before applying the hot asphalt. It is important that the subgrade be free of clods or large pebbles since it is difficult to coat properly such projections. Smooth surfaces require less asphalt in the production of a perfect membrane. Conversely, a rough surface requires more asphalt and greatly increases the difficulties in obtaining a completely water-tight membrane. An adequately smooth surface may be obtained by dragging first with a steel beam to knock down large projections, following with a smooth-faced steel roller to crush clods and push pebbles into the subgrades. Usually a roller weighing 50 lbs. per lineal inch of width is specified.

To guard against undue weed growth, all weeds, tules, cattails or willows should be grubbed prior to beginning the dragging and smoothing operations. Where weed growth is excessive, it will be wise to apply a good commercial soil sterilant containing sodium chlorate and borax. This material may be applied dry or in water solution, not less than 8 ounces to the square yard, in the infested areas. The sterilant should be applied after dragging and rolling have been completed.

Dry, dusty areas of subgrade must be sprinkled with water immediately prior to application of the hot asphalt. Unless this is done, holidays may form in the membrane due to the surface tension of the hot asphalt. Damp, wet, and cold soil helps, rather than hinders, the formation of a good membrane.

APPLICATION OF MEMBRANE—The asphalt is sprayed directly on the subgrade to produce a membrane of uniform thickness free from holes or holidays. The usual rate of application is 1.5 to 2.0 gallons per square yard, with heavier applications preferred for reservoirs and chemical ponds where leakage may be critical, and for other installations where the subgrade is unavoidably rough. Asphalt may be applied by hand sprays or by distributor bars connected to a distributor with a flexible metal hose and supported by suitable cables or ropes. All passes of the sprays should be lapped to avoid thin or bare areas. Applications on side slopes are usually made prior to covering the bottom of the canal or reservoir. Such application in several passes will avoid excessive run-down and puddling of the asphalt in the bottom. The temperature and pressure of the asphalt at the spray nozzle should be controlled to maintain a flat uniform spray. An application temperature of 350° to 400°F is recommended.

Rope supports or cleated planks should be provided for working on side slopes if the subgrade will be adversely disturbed when such means are not used. Roughened or disturbed areas should be smoothed before application of the asphalt. Concrete areas to which the membrane is to be bonded should be clean and free of loose material, and the asphalt should be applied to approximately twice the normal thickness, tapering to normal thickness at a distance of approximately 12 inches from the edge of the concrete. If atmospheric temperatures are low, or if the concrete is slightly damp, priming with a thin asphalt cutback is recommended before application of the membrane.

0356613

TOWOLDMON0057548

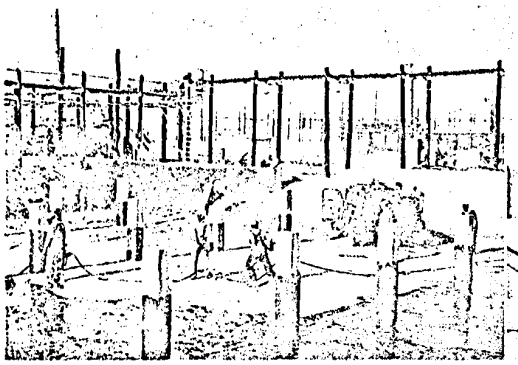

Lion membrane asphalt solves a seepage problem in spray pond at chemical plant in the South. Water is cooled and used repeatedly with no seepage loss.

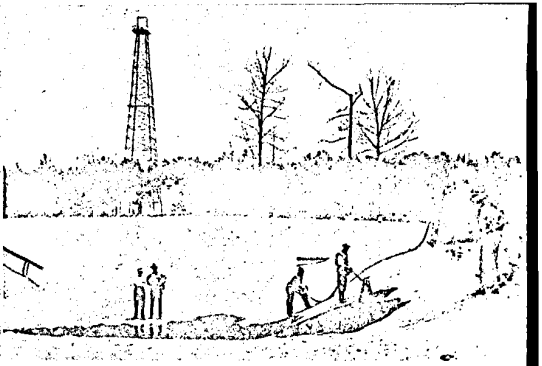

Salt water storage reservoir in a Southern oil field is being lined with Lion "cat" asphalt to prevent stream pollution. Note hand spray attached to distributor.

Adequate safety devices such as goggles, safety masks and heavy gloves should be used by workmen and spray men.

Spray equipment and the distributor must be flushed with distillate prior to shut-downs or storage. The distillate used for flushing the spray equipment should not come in contact with the completed membrane, and all distillate must be removed from the spray system before beginning membrane applications.

COVER MATERIAL—The primary purpose of cover material is to hold the membrane in place to prevent lifting and destruction by sub-surface hydrostatic forces or flowing waters. In addition, the cover protects the membrane from weathering and from mechanical injury such as may result from the hooves of livestock. In general, an earth cover not less than 12 inches in thickness is recommended. Graded sands and gravels generally form the most stable cover material. Water-deposited silts are the least stable.

Where water velocities exceed approximately 1.5 feet per second, or where turbulence or wave action exist, gravel blankets of pit-run aggregate placed 3 to 6 inches deep (or more) over the earth cover are advisable. The greater the erosive possibilities, the larger should be the maximum size of the aggregate. If conditions are severe, the use of asphalt macadam, as described in the following sections, is recommended.

Cover material is generally placed by casting from draglines, but in large reservoirs roadways of cover material may be built over the membrane and the soil hauled and spread from within the area. Dozing of soil cover over the berm is usually objectionable since sliding soil or rolling rock may injure the membrane.

COSTS—The cost of Buried Asphalt Membrane will vary with the type of installation, the availability of proper backfill materials, and other factors. Costs on the average type of project, which include all excavation and backfill for a completed job, are from 40c to 70c per square yard

SEEPAGE-AND-EROSION CONTROL

CANALS AND DRAINAGE DITCHES—In canals and drainage ditches where the water velocities are high, an asphalt-penetrated macadam cover can be placed directly on the "cat" asphalt membrane to prevent erosion. In reservoirs, the asphalt-penetrated macadam cover also may be used to prevent displacement of the cover material by wave action at the beach line.

To produce the macadam cover, a uniform covering of gravel having a thickness of 2 to 3 inches is placed over the asphaltic membrane. The gravel should be uniformly graded with 95% retained on a ⅜-inch screen and 100% passing through a one-inch screen. This grading is necessary in order to produce a layer of rock or gravel which will be sufficiently "open" to permit penetration by the asphalt applied to the surface. After the rock or gravel has been carefully placed, it is bound together and cemented with a heavy application of "cat" asphalt. The asphalt must be applied slowly, with a "flooding" action, to secure deep penetration of the rock layer. If the asphalt is applied fast or with light sweeping strokes, it will build up on the surface and deep penetration cannot be obtained. From 1-¾ to 3 gallons of asphalt per square yard are required for thorough penetration of the rock layer.

If a smooth surface is desired, a fine aggregate passing ½-inch and retained on a ¼-inch sieve can be applied at the rate of 25 pounds per square yard and keyed in by light rolling while the asphalt is still hot. Such construction can be in two or more layers to provide a blanket of additional weight if erosion conditions are very severe.

MEMBRANE SEALS IN EARTH DAM CONSTRUCTION—The use of membrane asphalt on the upstream face of dams, on the base under the fill, and on the reservoir floor opens up new possibilities in construction of earthen dams on sites that before were not economically feasible.

In the "Pacific Builder and Engineer" for October, 1951 there appears an interesting description of plans for an earth-filled dam approximately 3,600 feet long and 36 feet high at the valley floor. The use of catalytically blown asphalt membrane over the entire upstream face of the dam and on the base under the fill will make possible watertight storage of 10,000 acre-feet of water. The site for the reservoir had been considered several times in the past by engineers, but was not considered feasible with either a clay-core wall or sheet piling.

In such construction, a membrane completely covering the face of the dam prevents seepage from the reservoir from entering the fill of the dam; the membrane on which the fill is constructed prevents the water rising by hydrostatic pressure into the fill; the membrane extended upstream on the valley floor, for varying distances as conditions require*, practically eliminates loss through seepage by increasing the distance water must travel.

The membrane on the face of the dam should be covered by a select earth or sand cushion which in turn should be covered by compacted pit-run fill. The top layer should be slag, or stone riprap, or asphaltic concrete. The membrane on the base of the dam (upon which the fill is to rest) should be placed on prepared subgrade and protected by a select earth or sand cushion, and in the reservoir by an earth cover.

With the availability of catalytic membrane asphalt, construction of dams is possible in areas where only porous soils are

0356614

* "The length of travel of any seepage should be 10 times the static head at the particular location. If at a certain point on the dam there is a depth of 25 feet of water, the total length of membrane under the dam plus the membrane upstream from the dam on the valley floor should total 10 x 25 feet or 250 feet."

TOWOLDMON0057549



...Here a large canal near Cody, Wyoming, (Shoshone Project) is shown in use after sealing with P_2O_5 "cat" asphalt to prevent loss of valuable water by seepage.

available. Expensive clay core-wall or sheet-piling methods are no longer necessary when the membrane lining is used.

EROSION CONTROL

If the seepage problem is not important, erosion control may be obtained readily in ditches and on spillways by the use of an asphalt-penetrated macadam cover as described in the previous section, second paragraph. The subgrade should be smoothed before the application of the layer of gravel (the placement of the initial membrane being omitted). The "cat" asphalt is then slowly "flooded" to properly penetrate the gravel.

SOIL STABILIZATION

Uses of asphaltic membranes in soil stabilization include (a) enveloping the soil base, (b) as a capillary barrier, and (c) as a shoulder or a shoulder-and-ditch membrane. In these applications the catalytic asphalt serves as a water-tight barrier to maintain a low or a constant, predetermined, moisture content in the soil material and thus to stabilize the load-bearing capacity.

Soils with appreciable contents of clay have high bearing strengths if their moisture content is maintained at a low value. The bearing strength of such soils under such conditions is usually more than sufficient for their use as a base material in pavement construction. Loss in strength and troublesome volume changes are prevented by the membrane envelope, which maintains the moisture content at a constant predetermined value. The use of aggregate base courses is minimized or eliminated, depending on the supporting value of the enveloped soil.

In such construction a membrane is sprayed upon a prepared plane surface as on a fill, or in an excavated trench with sloping sides. The membrane should not be less than ⅜-inch thick to provide a reasonable factor of safety with the construction methods and stresses applied (2.1 gal. per sq. yd.). The membrane should be carefully inspected prior to covering and all thin areas and voids (holidays) should be corrected. The first layer of soil, placed to a minimum 6-inch depth over the membrane by dragline or by dozer, is compacted by a pneumatic-tired roller or by a track-laying tractor. After the initial layer has been compacted, the remainder of the fill is placed and compacted by conventional means. The moisture content of the soil should conform to normal compaction practices. On completion of the fill, the top and sides are sprayed with membrane to complete the envelope. (In certain cases the top membrane may not be necessary if an adequate water-tight wearing surface is placed in its stead). With the top membrane in position, base construction is placed as required, with a cushion course directly over the membrane. By means of such simple methods, existing soils can be made into stable bases.

Membranes can be used as capillary breaks under bases or subgrades subject to saturation or frost action through the presence of water immediately below these elements. The barrier will control both capillary and vapor moisture. With such a seal, the use of base materials having a high content of 0.02 mm. size fraction is practical in areas where frost susceptibility is a problem. Layers of gravel customarily used as capillary breaks but which frequently fail because of filling with capillary soil material, and which permit vapor phase passage of moisture, are replaced by a simple, readily applied, asphaltic membrane.

Side ditches are sometimes the source of destructive moisture in the subgrade and base. The use of asphaltic membranes in such application is entirely similar to that in canals.

Thus Lion's new catalytic asphalt, a product of petroleum research, has been found efficient and adaptable in controlling water and solution seepage, and for maintaining moisture content at the desired level in engineering construction.

COVERAGE REQUIREMENTS FOR MEMBRANE ASPHALT

Weight, lbs./gal. at 60°F	8.5
Gallons at 60°F., per ton	235
Film thickness at 1.5 gallons at 60°F/sq.yd	0.27 inches
Film thickness at 2.0 gallons at 60°F/sq.yd	0.36 inches
Film thickness at 2.5 gallons at 60°F/sq.yd	0.45 inches
Tons per acre at 1.5 gallons at 60°F/sq.yd	31.0
Tons per acre at 2.0 gallons at 60°F/sq.yd	41.4
Tons per acre at 2.5 gallons at 60°F/sq.yd	51.8
Multiplier for volume reduction to 60°F. from 350°F	0.9024
Multiplier for volume reduction to 60°F. from 375°F	0.8944
Multiplier for volume reduction to 60°F. from 400°F	0.8864
Multiplier for volume reduction to 60°F. from 425°F	0.8784

For further information about the utilization of membrane lining in specific cases, address your inquiries to

LION OIL COMPANY
ASPHALT SALES DEPT. EL DORADO, ARKANSAS

0356615

TOWOLDMON0057550

AROCLOR ADSORPTION ON ADSORBENT OTHER THAN CARBON

A study is presently in progress to evaluate the removal of Aroclor by adsorption on a less expensive adsorbent than carbon and then removing the adsorbent by flocculation.

0356616

TOWOLDMON0057551