AMERICAN BUREAU OF SHIPPING

REPORT NO. NN6593	**SURVEY REPORT**	PORT OF SURVEY Newport News, Va.
NO. IN RECORD 4285	NAME OF VESSEL S.S. "ESSO BOSTON"	PORT OF REGISTRY Wilmington, Del.
OFFICIAL NO. 263,784	OWNERS Humble Oil & Refining Co.	GROSS TONNAGE 30680

HULL BUILT BY Newport News Shipbuilding & Dry Dock Company HULL NO. 541 DATE 11-1960

CLASS IN FULL ✠A1(E) ✠AMS

DESCRIPTION OF SURVEY

DRYDOCKING AND REPAIRS, TAILSHAFT SURVEY, ANNUAL CLASSIFICATION SURVEY AND ANNUAL BOILER SURVEY.

NOTE: All cargo tanks, 1 through 12, were cleaned and coated with Rustban 191.

INVOICE NO. NN8650 DATE 9-7-66 ATTENDING:

TO: Humble Oil & Refining Co.
Marine Division
P.O. Box 1512
Houston, Texas 77001

Mr. E. Porus - representing Owners.
LCDR F. C. Thomas - representing USCG
LCDR H. A. Pledger - representing USCG

FEES CHARGED

SS (H)	SS (M)	SS (E)
DD $ 90.00	TS $ 65.00	BS $ 145.00
AS $ 90.00	CONVERSION	ACG
SE	SR	QCG
ALL	RLL	DAMAGE
SS (RMC)	INT (RMC)	SEMI-AN (RMC)
CONT. (RMC)	WT	OTHER

REPORT DISTRIBUTION:

OWNERS/AGENTS	6
ABS NEW YORK	2
ABS FOREIGN HEAD OFFICE (where applicable)	
OTHER COPY (IF ANY)	

APPROXIMATE COST OF REPAIRS

TANK VESSEL CARGO:

FOR ENTRIES BY REPORT DEPT. ONLY

Dkdocks) 45 Aux) 35 Tsdrs } 86

FEES	$ 390.00
	22.00
EXPENSES	18.00
TOTAL	$ 430.00
billed	

FIRST VISIT 8-24-66 LAST VISIT 8-30-66

Sunday Survey 8-28-66 6
NO. OF VISITS CHARGEABLE

J. F. Cox — Surveyor

Surveyor

Surveyor

JAN ? Sef

Printed in U.S.A.

EXX-MOR-005779

American Bureau of Shipping

45 BROAD STREET, NEW YORK, N. Y. 10004

Report No. NN6593 Newport News, Va., August 30, 1966

S.S. "ESSO BOSTON"

THIS IS TO CERTIFY that the undersigned Surveyor to this Bureau did, at the request of the Owner's Representative, attend the S.S. "ESSO BOSTON", Official Number 283,784 of Wilmington, Delaware on the 24th. day of August 1966 and subsequent dates as vessel lay on dry dock and afloat at the Newport News Shipbuilding and Dry Dock Company, Newport News, Virginia in order to examine and report upon the condition of the vessel relative to Drydocking and Repairs, Tailshaft Survey, Annual Classification Survey, Annual Boiler Survey, and report as follows:-

DRYDOCKING SURVEY

1. The vessel was placed on dry dock and cleaned. The bow plating, keel and shell plating, welds and riveted seams were examined and found satisfactory except for shell plate No. 4 in Strake A, starboard side, set up between 5 frame spaces. Condition not considered serious and is noted for Record Only.

2. The rudder, sternframe, gudgeon and bushing were examined and placed in satisfactory condition by dressing liner on pintle pin and renewing bushing staves. Pintle pin hardened up.

3. All sea valves including the emergency bilge suction were opened up, examined except for the main high, low and overboard discharge valves and placed in satisfactory condition as follows:-

   (a) The following valves were renewed:

   Bilge pump overboard; overboard cooling from feed water and cargo pump L.O. coolers; overboard from generator air cooler; overboard from refrigeration condenser; overboard from evaporator; overboard from air conditioning; overboard from heating coil coolers; overboard from fire pump.

   (b) The main high, low and overboard butterfly sea valves serving the main condenser cooling water were provided with manual controls for operation of each valve, tried out and operated satisfactory, completing outstanding of Item No. 3, Newport News, Virginia report No. NN6144 dated October 8, 1965.

4. The main and auxiliary sea chests and strainers were cleaned, examined and found satisfactory.

5. The hull was recoated from keel to rail.

CONTINUED:

This Report is issued subject to the condition that it is understood and agreed that neither the Bureau nor any of its Committees is under any circumstances whatever to be held responsible for any inaccuracy in any report or certificate issued by this Bureau or its Surveyors or in any entry in the Record or other publication of the Bureau or for any error of judgment, default or negligence of its Officers, Surveyors or Agents.

EXX-MOR-005780

6. The oil lubricated tailshaft was drawn in, examined and subjected to a magnetic particle test. The bearing and oil seals examined. Clearance of bearings taken and no wear indicated. The solid bronze propeller examined and all found satisfactory. Blades of propeller were dressed by grinding, the shaft was run out and propeller connected up in good order. Counterbore in hub and fairwater were filled with a suitable sealing material.

Tailshaft Survey completed August 29, 1966.

ANNUAL SURVEY

7. Steering gear arrangements, cross head, hydraulic pumps, motors and connections examined, telemotor rams and visible piping examined and found in order.

8. Watertight doors in bulkheads and vessel's sides, closing appliances in the superstructure bulkheads and for air and sounding pipes examined and found satisfactory.

9. Coamings of ventilators to spaces below the freeboard deck and below decks of superstructures examined and found satisfactory.

10. Hatchway coamings, covers, and all their supports and means for closing examined and found satisfactory.

11. Machinery casings, guard rails and all other means of protection provided for openings and for access to crews quarters were examined and found satisfactory.

12. No material alteration has been made in the hull, superstructure or means of closing openings in superstructures which affect the position of the load line.

The International Load Line Certificate Number I-17-152-2 was endorsed on August 26, 1966. See Newport News, Virginia report No. LL3833 dated August 29, 1966.

13. A general examination was made of the fire extinguishing equipment and so far as could be seen found satisfactory.

14. A general examination was made of main and auxiliary machinery and anchor windlass and found satisfactory. The main circulating pump impeller, inner stage seals and bearings were renewed, also port main condensate pump, impeller, inner stage seals and bearings were renewed.

15. The port and starboard anchors and 365 fathoms of steel stud link were ranged, cleaned, examined and placed in satisfactory condition by renewing 2 patent links next to swivel and 1 pear shaped link next to anchor shackle on the port side. Links stamped: 65PA38938 J.C.S. 5-65 720 130 AB 51438.

16. A patent link was installed near anchor on the stern anchor chain, stamped: 66PA11706 GCM 8-66 747680 AB 53460.

17. The port and starboard water tube boilers together with their superheaters and valves were examined internally and externally and found in satisfactory condition.

CONTINUED:

EXX-MOR-005781

18. Safety valves on drums and superheaters were floated under steam to their allowable working pressure and operated satisfactorily.

19. Annual Classification Survey completed 8-1966.
Tailshaft Survey completed 8-1966.
Annual Boiler Survey completed 8-1966.

Vessel undocked August 29, 1966.

20. Outstanding of Boston, Mass., report No. B-25196 dated November 17, 1963 was not dealt with at this time.

It is recommended that this vessel be retained in her present Class with this Bureau.

OUTSTANDING: Item No. 20.

J. F. COX - SURVEYOR

American Bureau of Shipping

45 BROAD STREET, NEW YORK, N. Y. 10004

Report No. NN6593 Newport News, Va., August 30, 1966

S.S. "ESSO BOSTON"

THIS IS TO CERTIFY that the undersigned Surveyor to this Bureau did, at the request of the Owner's Representative, attend the S.S. "ESSO BOSTON", Official Number 283,784 of Wilmington, Delaware on the 24th. day of August 1966 and subsequent dates as vessel lay on dry dock and afloat at the Newport News Shipbuilding and Dry Dock Company, Newport News, Virginia in order to examine and report upon the condition of the vessel relative to Drydocking and Repairs, Tailshaft Survey, Annual Classification Survey, Annual Boiler Survey and report as follows:-

DRYDOCKING SURVEY

1. The vessel was placed on dry dock and cleaned. The bow plating, keel and shell plating, welds and riveted seams were examined and found satisfactory except for shell plate No. 4 in Strake A, starboard side, set up between 5 frame spaces. Condition not considered serious and is noted for Record Only.

2. The rudder, sternframe, gudgeon and bushing were examined and placed in satisfactory condition by dressing liner on pintle pin and renewing bushing staves. Pintle pin hardened up.

3. All sea valves including the emergency bilge suction were opened up, examined except for the main high, low and overboard discharge valves and placed in satisfactory condition as follows:-

   (a) The following valves were renewed:

   Bilge pump overboard; overboard cooling from feed water and cargo pump L.O. coolers; overboard from generator air cooler; overboard from refrigeration condenser; overboard from evaporator; overboard from air conditioning; overboard from heating coil coolers; overboard from fire pump.

   (b) The main high, low and overboard butterfly sea valves serving the main condenser cooling water were provided with manual controls for operation of each valve, tried out and operated satisfactory, completing outstanding of Item No. 3, Newport News, Virginia report No. NN6144 dated October 8, 1965.

4. The main and auxiliary sea chests and strainers were cleaned, examined and found satisfactory.

5. The hull was recoated from keel to rail.

CONTINUED:

This Report is issued subject to the condition that it is understood and agreed that neither the Bureau nor any of its Committees is under any circumstances whatever to be held responsible for any inaccuracy in any report or certificate issued by this Bureau or its Surveyors or in any entry in the Record or other publication of the Bureau or for any error of judgment, default or negligence of its Officers, Surveyors or Agents.

Printed in U.S.A.

6. The oil lubricated tailshaft was drawn in, examined and subjected to a magnetic particle test. The bearing and oil seals examined. Clearance of bearings taken and no wear indicated. The solid bronze propeller examined and all found satisfactory. Blades of propeller were dressed by grinding, the shaft was run out and propeller connected up in good order. Counterbore in hub and fairwater were filled with a suitable sealing material.

Tailshaft Survey completed August 29, 1966.

ANNUAL SURVEY

7. Steering gear arrangements, cross head, hydraulic pumps, motors and connections examined, telemotor rams and visible piping examined and found in order.

8. Watertight doors in bulkheads and vessel's sides, closing appliances in the superstructure bulkheads and for air and sounding pipes examined and found satisfactory.

9. Coamings of ventilators to spaces below the freeboard deck and below decks of superstructures examined and found satisfactory.

10. Hatchway coamings, covers, and all their supports and means for closing examined and found satisfactory.

11. Machinery casings, guard rails and all other means of protection provided for openings and for access to crews quarters were examined and found satisfactory.

12. No material alteration has been made in the hull, superstructure or means of closing openings in superstructures which affect the position of the load line.

The International Load Line Certificate Number I-17-152-2 was endorsed on August 26, 1966. See Newport News, Virginia report No. LL3833 dated August 29, 1966.

13. A general examination was made of the fire extinguishing equipment and so far as could be seen found satisfactory.

14. A general examination was made of main and auxiliary machinery and anchor windlass and found satisfactory. The main circulating pump impeller, inner stage seals and bearings were renewed, also port main condensate pump, impeller, inner stage seals and bearings were renewed.

15. The port and starboard anchors and 365 fathoms of steel stud link were ranged, cleaned, examined and placed in satisfactory condition by renewing 2 patent links next to swivel and 1 pear shaped link next to anchor shackle on the port side. Links stamped: 65PA38938 J.C.S. 5-65 720 130 AB 51438.

16. A patent link was installed near anchor on the stern anchor chain, stamped: 66PA11706 GCM 8-66 747680 AB 53460.

17. The port and starboard water tube boilers together with their superheaters and valves were examined internally and externally and found in satisfactory condition.

CONTINUED:

EXX-MOR-005784

18. Safety valves on drums and superheaters were floated under steam to their allowable working pressure and operated satisfactorily.

19. Annual Classification Survey completed 8-1966.
Tailshaft Survey completed 8-1966.
Annual Boiler Survey completed 8-1966.

Vessel undocked August 29, 1966.

20. Outstanding of Boston, Mass., report No. B-25196 dated November 17, 1963 was not dealt with at this time.

It is recommended that this vessel be retained in her present Class with this Bureau.

OUTSTANDING: Item No. 20.

J. F. COX - SURVEYOR

FORM LL 90

AMERICAN BUREAU OF SHIPPING

FILE

REPORT OF ANNUAL LOAD LINE INSPECTION

REPORT NO.	NAME OF SHIP		DATE
22833	S.S. "ESSO BOSTON"		August 29, 1956
GROSS TONNAGE	OFFICIAL NUMBER	PORT OF REGISTRY	PORT OF SURVEY
39680	253,784	Wilmington, Delaware	Newport News, Va.

OWNERS

Humble Oil and Refining Company

ITEM EXAMINED	CONDITION	RECOMMENDATIONS — REPAIRS EFFECTED
1. HATCHWAYS Coamings, Stiffeners, stays, beams, fore and afters, carriers, covers, tarpaulins, cleats, battens, wedges and lashings	Satisfactory	
2. MACHINERY CASINGS Fiddley openings, casings, doors, sills, skylights	Satisfactory	
3. FLUSH BUNKER SCUTTLES Attachments	- - -	
4. COMPANIONWAYS Doors, sills, fastenings	Satisfactory	
5. VENTILATORS Coamings, supports, deck connections, closing arrangements	Satisfactory	
6. AIRPIPES Closing arrangements	Satisfactory	
7. GANGWAY, CARGO AND COALING PORTS In ship's sides and superstructures	Satisfactory	
8. SCUPPERS AND SANITARY DISCHARGES Valves	Satisfactory	

EXX-MOR-005786

ITEM EXAMINED	CONDITION	RECOMMENDATIONS — REPAIRS EFFECTED
9. AIRPORTS Deadcovers	[redacted]	
10. GUARD RAILS OR BULWARKS	[redacted]	
11. FREEING PORTS Shutters, bars	- - -	
12. PROTECTION AND ACCESS TO CREW'S QUARTERS Gangways	[redacted]	
13. LIFE LINES	- - -	
14. END BULKHEADS OF SUPERSTRUCTURES Closing appliances and fastenings	[redacted]	
15. TIMBER, TANKER AND SPECIAL TYPE Supplementary fittings	- - -	
16. LOAD LINE MARKS	[redacted]	[redacted]

I have surveyed the above mentioned ship and am satisfied:—

(i) that the fittings and appliances for the protection of openings, the guard rails, the freeing ports, and the means of access to the crew's quarters have been maintained in an effective condition, and

(ii) that no alterations have been made to the hull or superstructures which would affect the calculation determining the position of the load lines.

ANNUAL:—

I have endorsed the load line certificate number [redacted] as follows:-

J. P. Cox — [redacted] — [redacted]

Signature — Place — Date

RENEWAL:—

I have renewed the load line certificate number _____ as follows:-

_____ — _____ — _____

Signature — Place — Date

Renewed until _____

_____

Surveyor, American Bureau of Shipping

J. P. Cox

This Report is issued subject to the condition that it is understood and agreed that neither the Bureau nor any of its Committees is under any circumstances whatever to be held responsible for any inaccuracy in any report or certificate issued by this Bureau or its Surveyors or in any entry in the Record or other publication of the Bureau or for any error of judgment, default or negligence of its Officers, Surveyors or Agents.

Fee
Expenses

Total

This vessel is classed [redacted]

Has this survey been carried out at the same time as a corresponding survey required for maintenance of class and for which a fee has been charged? Yes

If so, give report number [redacted]

This survey was requested by: [redacted]

PRINTED IN U. S. A.

EXX-MOR-005787

AMERICAN BUREAU OF SHIPPING

SURVEY REPORT

REPORT NO. NN6144		PORT OF SURVEY Newport News, Va.
NO. IN RECORD 4129	NAME OF VESSEL S.S. "ESSO BOSTON"	PORT OF REGISTRY Wilmington, Del.
OFFICIAL NO. 283,784	OWNERS Humble Oil and Refining Company	GROSS TONNAGE 30,680

HULL BUILT BY Newport News Shipbuilding and Dry Dock Company HULL NO. 541 DATE 11-1960

CLASS IN FULL CA1 CAMS

DESCRIPTION OF SURVEY

DRYDOCKING, COMPLETION OF SPECIAL SURVEY NO. 1 ON HULL AND ANNUAL SURVEY, HULL DAMAGE AND REPAIRS, COMPLETION OF SPECIAL SURVEY ON MACHINERY, AND ANNUAL BOILER SURVEY.

Outstanding: Item No. 3 of this report.

INVOICE NO. NN8169 DATE 10-29-65

TO: Humble Oil & Refining Co.
Marine Division
P.O. Box 1512
Houston 1, Texas

ATTENDING:

Mr. J. Ireland, for Owners

Mr. Charles Nye , for Pacific Pump Co.

Mr. R. Caudle - USCG

Mr. J. Lencemeyer - USCG

FEES CHARGED

SS (H) $ 823.00	SS (M) $ 620.00	SS (E)	
DD $ 90.00	TS	BS $ 145.00	
AS $ 90.00	CONVERSION	ACG	
SE	SR	QCG	
ALL	RLL $ 25.00	DAMAGE $ 300.00	
SS (RMC)	INT (RMC)	SEMI-AN (RMC)	
CONT. (RMC)	WT	OTHER	

REPORT DISTRIBUTION:

OWNERS/AGENTS 6
ABS NEW YORK 2
ABS FOREIGN HEAD OFFICE (where applicable)
OTHER COPY (IF ANY)

APPROXIMATE COST OF REPAIRS $ 35,000.00

TANK VESSEL CARGO:

FOR ENTRIES BY REPORT DEPT. ONLY

SS#1 Newport News 10 65 TWL(H) 10 65
AS 10 65
AS 10 65 AN(A) 10 65
BS 10/65

FEES $2,093.00

EXPENSES 20.00

TOTAL $2,113.00

billed

FIRST VISIT 9-22-65

NO. OF VISITS CHARGEABLE 10

FEB 7 1966

LAST VISIT 10-8-65

J.F. COX Surveyor

ALBERT MIDBOE - Surveyor

Surveyor

Printed in U.S.A.

EXX-MOR-005788

American Bureau of Shipping

45 BROAD STREET, NEW YORK, N. Y.-10004

Report No. NN6144 — Newport News, Va., October 8, 1965

S.S. "ESSO BOSTON"

THIS IS TO CERTIFY that the undersigned Surveyors to this Bureau did, at the request of Owner's Representative, attend the S.S. "ESSO BOSTON" of Wilmington, Delaware, Official No. 283,784 while vessel was in drydock and afloat at the Newport News Shipbuilding and Drydock Company, Newport News, Virginia on the 22nd. day of September 1965 and subsequent dates relative to Drydocking, Completion of Special Survey No. 1 on Hull and Annual Survey, Hull Damage and Repairs, Completion of Special Survey on Machinery, Annual Boiler Survey and report as follows:-

1. The vessel was placed on dry dock and cleaned. The bow plating, keel and shell plating, welds and rivets were examined and placed in satisfactory condition as follows:-

(a) Hull damage as result of grounding and refloating while vessel was in a loaded condition.

(b) #1 Starboard Cargo Tank
After end of plate number 3 in strake D set in, and was cropped and renewed for a length of 7'-3" x 7'-6" x 45.9# together with 10' of longitudinal frame No. 27 and thru bracket in way.

#2 Starboard Cargo Tank
After outboard section of plate No. 6 in strake "E" set in and was cropped and renewed over an area 4' wide by '6' long. Longitudinal frames #24 and 25 in way were cropped and renewed for a length of 10' and 13' respectively, also two flat bar stiffeners on longitudinals were renewed. Transverse frames 103 and 104 in way, damaged and were dealt with by cropping, fitting and welding inserts size 30" x 30" and 60" x 36" 20.4# plate respectively. Forward end of plate No. 4 in strake E faired over an area of 2' x 3'.

(c) Forward Starboard Bunker Tank, Cofferdam, #1, 2, 3 Cargo Tanks
Plate numbers 5 and 6 in strake M set in and was renewed for a length of 30' each.
Plate number 4 in strake M set in for full length and extends into plate number 3 for 3 feet. Plating was renewed as one plate for a length of 30'.
Plate number 7 in strake N set in at forward end for a length of 17' and was cropped and part renewed.
Plate numbers 4, 5 and 6 in strake N set in and were renewed for a length of 18', 23'-6" and 30' respectively.
Plate number 3 in strake N set in in two local areas and were heated and faired.
Plate number 6 in strake P forward lower edge set in and was heated and faired.
Plate number 5 in strake P set in at forward end and was cropped and renewed for a length of 14'-6".
Plate number 4 in strake P set in in two local areas and were heated and faired.
Plate number 5 in strake R set in at forward end, plate was cropped and renewed

CONTINUED:

This Report is issued subject to the condition that it is understood and agreed that neither the Bureau nor any of its Committees is under any circumstances whatever to be held responsible for any inaccuracy in any report or certificate issued by this Bureau or its Surveyors or in any entry in the Record or other publication of the Bureau or for any error of judgment, default or negligence of its Officers, Surveyors or Agents.

Printed in U.S.A.

EXX-MOR-005789

Item No. 1 continued:

for a length of 14'.

(d) #2 Port Cargo Tank
After inboard section of plate number 3, in Strake F and adjacent plating in strake E inboard edge set up and were cropped and renewed as one plate over a width of 6' x 12' x 48.45# longitudinal frame number 24 in way renewed for a length of 13' together with flat bar stiffener in way. Transverse web frame No. 104 cropped and renewed over an area of 60" x 42".

(e) Forward Port Bunker Tank
After end of plate number 4 in strake "P" set in and was cropped and renewed for a length of 12'.

(f) Internals in way of the above were cropped and renewed or faired in place as found necessary, also removals to effect repairs were replaced in good order.

(g) All tanks in way of the above repairs were examined after completion of work, subjected to a hydrostatic test, proven tight, and recoated where necessary.

(h) Outstanding of Boston Report No. B25196 relative to stern shell structure adjacent to stream anchor, re-examined and considered of minor nature and no recommendations made.

(i) Items 1 (a), (b), (c), (d), (e), (f) and (g) complete outstanding of New Orleans report No. 18049 dated March 26, 1965.

2. Stern frame, rudder, pintle pins and bushings examined and found in satisfactory condition.

3. Sea suction and discharge valves and emergency bilge injection valve were opened up, cleaned, examined and found in satisfactory condition.

NOTE: The sea valves high, low and overboard serving the main condenser were removed and were replaced with cast steel butterfly valves manufactured by Fargi-valve Portland, Oregon stamped AB 560-8-27-65 Dwg. CA-492 Figure 58. These valves are pneumatically controlled. After installation the closing mechanism was tested and operated satisfactorily. Valves are not provided with an attached arrangement for manual closing, and it is recommended that same be provided at the Owner's earliest opportunity. Since these valves are not provided with manual control it was demonstrated that the linkage between valve and air piston rod could be disconnected and valve closed with a pinch bar.

4. Sea chest and strainers were cleaned, examined and found in satisfactory condition.

5. The hull was painted.

6. The solid bronze propeller examined and found satisfactory; clearance of oil lubricated stern tube bearing measured and found to be .30".

7. Port and starboard anchors and 330 fathoms of stud link chain were ranged, examined and found in satisfactory condition.

8. Chain locker, its pumping arrangements and hawse pipes examined and found satisfactory.

9. Equipment examined and found satisfactory.

10. Scupper and overboard discharge valves opened up, examined and found satisfactory.

11. Poop, forward and after pump room spaces were examined and found in satisfactory condition.

12. The forward deep tanks, all cargo tanks, bunker tanks and cofferdams in way were examined, hydrostatic tested and placed in satisfactory condition as follows:-'

Scattered fractures in bulkhead plating and internal structures were chipped out and rewelded as found necessary; for particulars of plate renewals at this time see Item 1 of this report.

13. After peak tank, fresh water double bottom tanks and cofferdams in way were cleaned, examined, hydrostatic tested and found satisfactory.

ANNUAL SURVEY

14. Steering gear arrangements, crosshead, bearings and connections examined, telemotor rams and piping examined and found in order. Steering gear operated from bridge control and found satisfactory.

15. Watertight doors in bulkheads and closing appliances in the superstructure bulkheads and for air and sounding pipes examined and found satisfactory.

16. Coamings of ventilators to spaces below the freeboard deck and below decks of superstructures examined and found satisfactory.

17. Hatchway coamings, covers, and all their supports and means for closing examined and found satisfactory.

18. Machinery casings, guard rails and all other means of protection provided for openings and for access to crew's quarters were examined and found satisfactory.

19. No material alteration has been made in the hull, superstructures or means of closing openings in superstructures which affect the position of the load line.

20. Load line marks were verified and repainted.

21. The International Load Line Certificate Number I-17152 was renewed till October 1, 1970. See Newport News, Virginia report number LL3729 dated October 1, 1965.

22. A general examination was made of the fire extinguishing apparatus and so far as could be seen was found satisfactory.

EXX-MOR-005791

SPECIAL SURVEY ON MACHINERY

23. The L.P main turbine casing, rotor, shaft, coupling, blading, shrouding, packing, diaphragms, nozzle block, bearings, thrust were opened up, examined and found in satisfactory condition.

(a) After the rotor was cleaned and journals polished it was dynamically balanced satisfactorily.

24. The main reduction gears were examined, tooth contact checked and found satisfactory.

25. The main thrust was examined, clearances checked and all found satisfactory.

26. The main condenser was cleaned, examined, tested and found satisfactory.

27. Line shafting and bearings opened up, examined and found satisfactory.

28. The two auxiliary generator turbines, gears, bearings, thrust bearings, casings, rotors, couplings, blading, shrouding, packing, diaphragms, governor mechanism, nozzle blocks, and lube oil system were opened up under supervision of the manufacturers' representative, cleaned, examined and placed in satisfactory condition by renewing worn parts as found necessary.

29. The two auxiliary generator sets of 750 KW capacity each, together with their bearings, windings and electrical connections were cleaned, examined and found in satisfactory condition.

30. Electric cables were examined as far as practical and found satisfactory.

31. The switchboard, motors and the main and auxiliary electrical circuits were megger tested and placed in satisfactory condition by clearing all grounds and circuits with low readings.

32. The overspeed was checked also governor mechanism while the 2 turbo-generator units were running without and under loaded conditions and found satisfactory.

33. The auxiliary condenser, evaporators, feed water heater, fuel oil heaters, lube oil coolers, and air ejectors examined, tested and found in satisfactory condition.

34. Forced draft blowers were examined and found satisfactory.

35. The feed pumps and turbines driving same were opened up under supervision of the manufacturers' representative, examined and placed in satisfactory condition by renewing worn parts as found necessary.

36. Main and auxiliary pumps consisting of fire and butterworth, bilge, sanitary, auxiliary circulator and condensate, main circulator and condensate auxiliary feed, fuel oil service, fuel oil transfer general service and lubricating oil pumps were opened up, examined and placed in satisfactory condition by renewing worn parts and packing as found necessary.

EXX-MOR-005792

37. Pumping arrangements examined and found satisfactory.

38. The two steering gear pumps were examined under working conditions. Relief valves checked and found satisfactory.

39. The forced draft blowers and the air compressor were opened up, examined and found satisfactory.

40. Anchor windlass bearings, shafting, gears, pistons, cylinders and connecting rods, valves and valve gear were examined and found in satisfactory condition.

41. The port and starboard water tube boilers together with their superheaters and valves were subjected to a hydrostatic test of 850 PSI, examined externally and found satisfactory.

42. Upon completion of test the boilers, superheaters and valves were opened up, examined internally and found satisfactory.

43. Safety valves on drums and superheaters were floated under steam to their allowable working pressure and operated satisfactory.

44. Steam lines which were parted in connection with opening up turbines were examined internally and remainder of steam lines examined externally and found satisfactory.

45. A dock trial was held and the main and auxiliary machinery operated satisfactorily.

46. An automated oil firing system for the boilers was installed at this time. Control consoles were installed in the engine and boiler spaces and all necessary air, oil, steam piping and electrical wiring, controls and fittings installed under the supervision of the manufacturers' representatives and in accordance with drawings of Peabody Engineering Co. approved June 22, 1965. The equipment was tested satisfactorily during the owner's dock trial. Additional adjustments are to be made during the next voyage under the supervision of the manufacturers' representative.

47.

Special Survey No. 1 Hull completed -	October 1965.
Special Survey on Machinery completed -	October 1965.
Annual Survey completed -	October 1965.
Annual Boiler Survey completed -	October 1965.
Undocked -	September 25, 1965.

The foregoing surveys are considered complete subject to review by the New York Office.

48. Outstanding of this report: Item No. 3.

This vessel being considered in a seaworthy condition it is recommended that she be retained in present Class with this Bureau.

J. F. COX - SURVEYOR

ALBERT MIDBOE - SURVEYOR

EXX-MOR-005793

AMERICAN BUREAU OF SHIPPI
Tooth Contact Form

of Vessel S/S "ESSO BOSTON" Yard Built NN S & DD CO Hull No. 541
ate of Survey 10-6-65 Port of Survey Newport News, Va.
Survey Report No. NN6144 Gear Mfr.

INDICATE TOOTH CONTACT BY SHADING

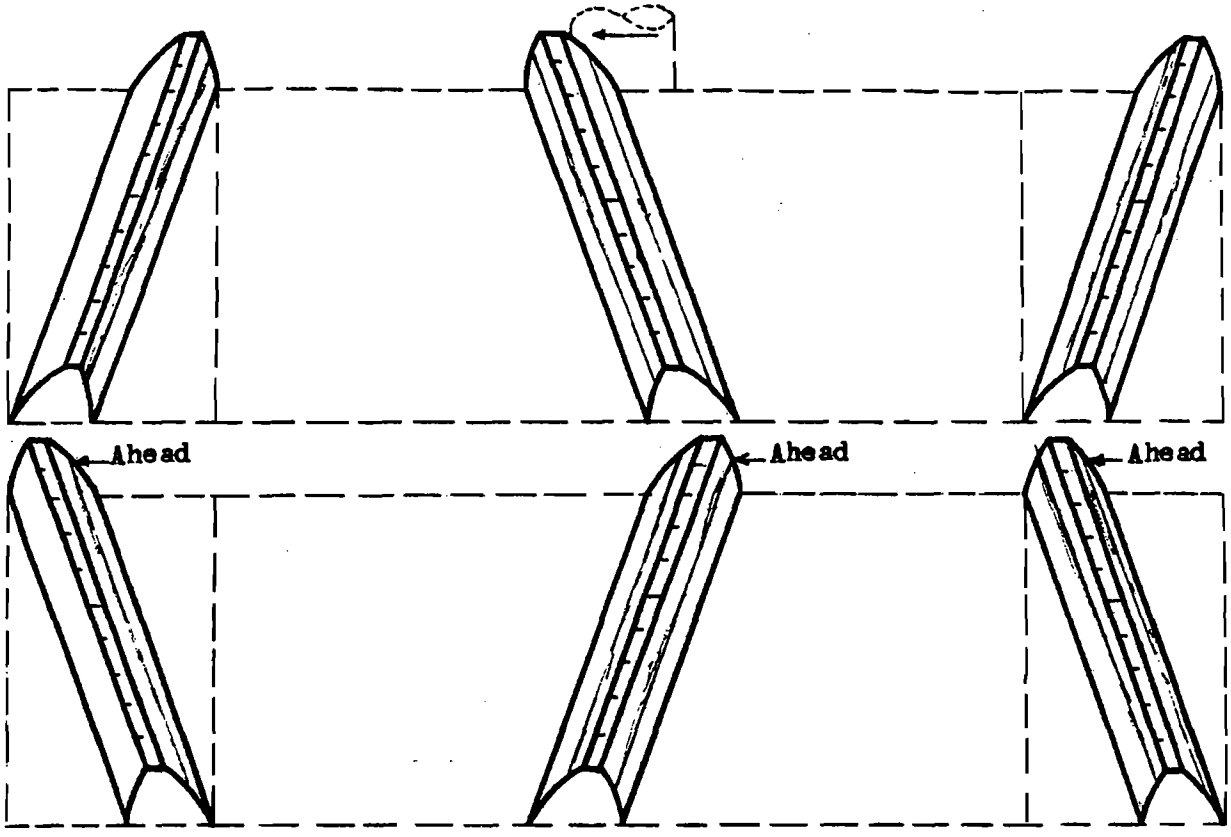

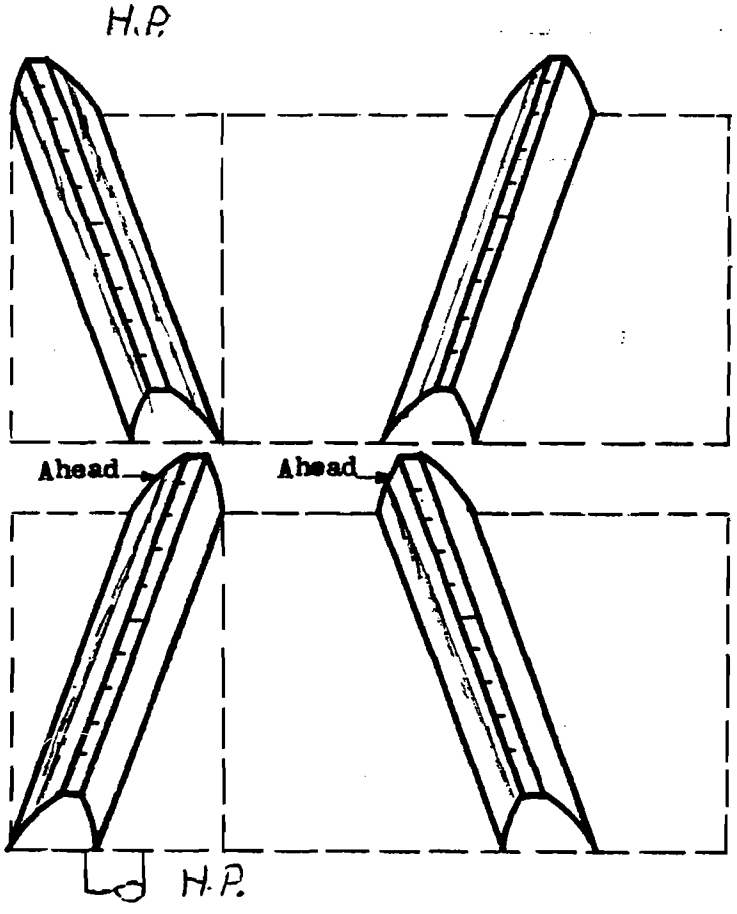

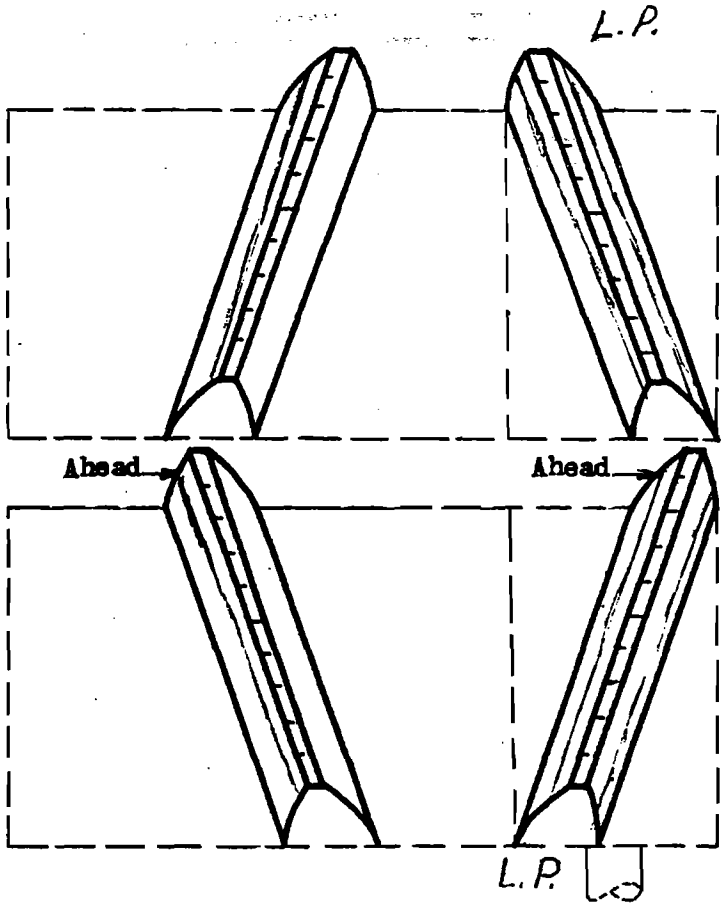

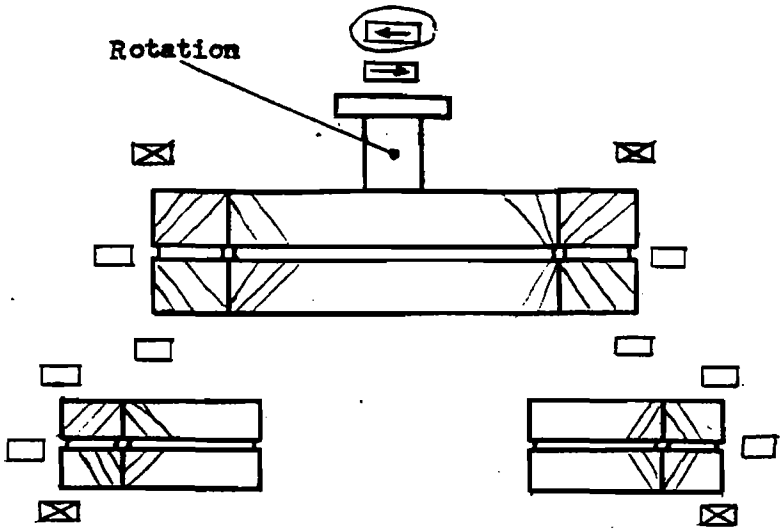

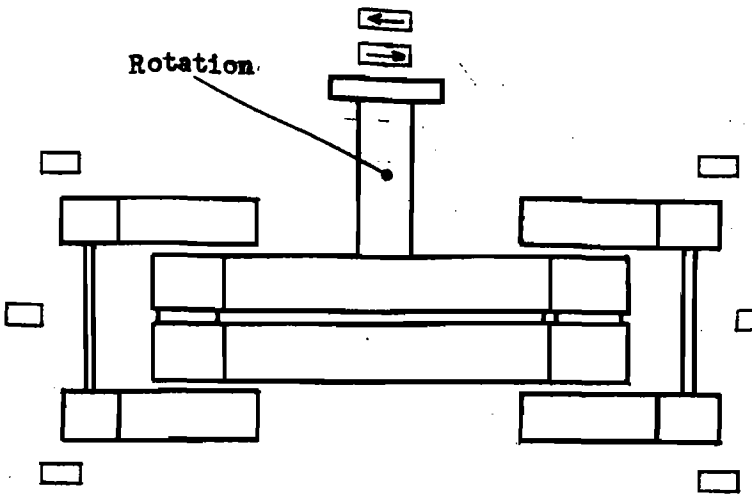

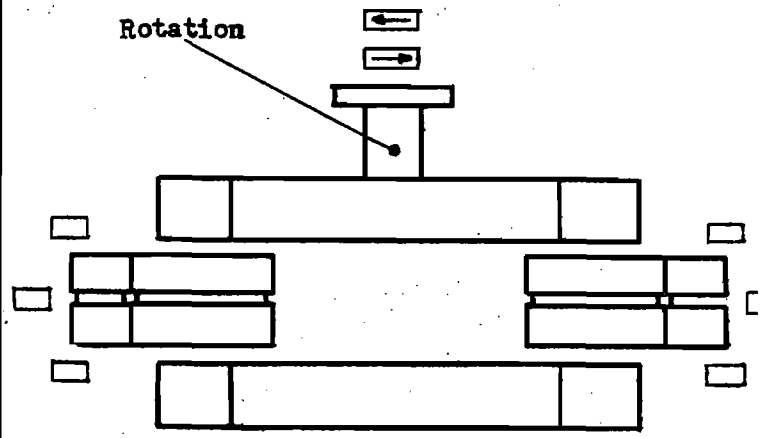

Show arrangement if not similar to one of above sketches
Indicate direction of helix angles on appropriate sketch
Indicate location of driving coupling on pinions by check mark in proper box
Indicate direction of rotation of low speed shaft, as viewed from above, by circling appropriate arrow

Were teeth coated before survey?

- ☐ Metal dye (Dykem or equivalent)
- ☐ Copper sulphate
- ☒ Not coated

How were gears finished?

- ☐ Lapped
- ☐ Shaved
- ☐ Ground
- ☐ As hobbed

Type of lube oil used ESSO MAR 56 Viscosity

Remarks

Surveyor Albert Midboe
ALBERT MIDBOE

PRINTED IN U. S. A.

American Bureau of Shipping

45 BROAD STREET, NEW YORK, N. Y.-10004

Report No. NN6144 — Newport News, Va., October 8, 1965

S.S. "ESSO BOSTON"

THIS IS TO CERTIFY that the undersigned Surveyors to this Bureau did, at the request of Owner's Representative, attend the S.S. "ESSO BOSTON" of Wilmington, Delaware, Official No. 283,784 while vessel was in drydock and afloat at the Newport News Shipbuilding and Drydock Company, Newport News, Virginia on the 22nd. day of September 1965 and subsequent dates relative to Drydocking, Completion of Special Survey No. 1 on Hull and Annual Survey, Hull Damage and Repairs, Completion of Special Survey on Machinery, Annual Boiler Survey and report as follows:-

1. The vessel was placed on dry dock and cleaned. The bow plating, keel and shell plating, welds and rivets were examined and placed in satisfactory condition as follows:-

(a) Hull damage as result of grounding and refloating while vessel was in a loaded condition.

(b) #1 Starboard Cargo Tank
After end of plate number 3 in strake D set in, and was cropped and renewed for a length of 7'-3" x 7'-6" x 45.9# together with 10' of longitudinal frame No. 27 and thru bracket in way.

#2 Starboard Cargo Tank
After outboard section of plate No. 6 in strake "E" set in and was cropped and renewed over an area 4' wide by 6' long. Longitudinal frames #24 and 25 in way were cropped and renewed for a length of 10' and 13' respectively, also two flat bar stiffeners on longitudinals were renewed. Transverse frames 103 and 104 in way, damaged and were dealt with by cropping, fitting and welding inserts size 30" x 30" and 60" x 36" 20.4# plate respectively. Forward end of plate No. 4 in strake E faired over an area of 2' x 3'.

(c) Forward Starboard Bunker Tank, Cofferdam, #1, 2, 3 Cargo Tanks
Plate numbers 5 and 6 in strake M set in and was renewed for a length of 30' each.
Plate number 4 in strake M set in for full length and extends into plate number 3 for 3 feet. Plating was renewed as one plate for a length of 30'.
Plate number 7 in strake N set in at forward end for a length of 17' and was cropped and part renewed.
Plate numbers 4, 5 and 6 in strake N set in and were renewed for a length of 18', 23'-6" and 30' respectively.
Plate number 3 in strake N set in in two local areas and were heated and faired.
Plate number 6 in strake P forward lower edge set in and was heated and faired.
Plate number 5 in strake P set in at forward end and was cropped and renewed for a length of 14'-6".
Plate number 4 in strake P set in in two local areas and were heated and faired.
Plate number 5 in strake R set in at forward end, plate was cropped and renewed

CONTINUED:

This Report is issued subject to the condition that it is understood and agreed that neither the Bureau nor any of its Committees is under any circumstances whatever to be held responsible for any inaccuracy in any report or certificate issued by this Bureau or its Surveyors or in any entry in the Record or other publication of the Bureau or for any error of judgment, default or negligence of its Officers, Surveyors or Agents.

Printed in U.S.A.

Item No. 1 continued:

for a length of 14'.

(d) #2 Port Cargo Tank
After inboard section of plate number 3, in Strake F and adjacent plating in strake E inboard edge set up and were cropped and renewed as one plate over a width of 6' x 12' x 48.45# longitudinal frame number 24 in way renewed for a length of 13' together with flat bar stiffener in way. Transverse web frame No. 104 cropped and renewed over an area of 60" x 42".

(e) Forward Port Bunker Tank
After end of plate number 4 in strake "F" set in and was cropped and renewed for a length of 12'.

(f) Internals in way of the above were cropped and renewed or faired in place as found necessary, also removals to effect repairs were replaced in good order.

(g) All tanks in way of the above repairs were examined after completion of work, subjected to a hydrostatic test, proven tight, and recoated where necessary.

(h) Outstanding of Boston Report No. B25196 relative to stern shell structure adjacent to stream anchor, re-examined and considered of minor nature and no recommendations made.

(i) Items 1 (a), (b), (c), (d), (e), (f) and (g) complete outstanding of New Orleans report No. 18049 dated March 26, 1965.

2. Stern frame, rudder, pintle pins and bushings examined and found in satisfactory condition.

3. Sea suction and discharge valves and emergency bilge injection valve were opened up, cleaned, examined and found in satisfactory condition.

NOTE: The sea valves high, low and overboard serving the main condenser were removed and were replaced with cast steel butterfly valves manufactured by Fargi-valve Portland, Oregon stamped AB 560-8-27-65 Dwg. CA-492 Figure 58. These valves are pneumatically controlled. After installation the closing mechanism was tested and operated satisfactorily. Valves are not provided with an attached arrangement for manual closing, and it is recommended that same be provided at the Owner's earliest opportunity. Since these valves are not provided with manual control it was demonstrated that the linkage between valve and air piston rod could be disconnected and valve closed with a pinch bar.

4. Sea chest and strainers were cleaned, examined and found in satisfactory condition.

5. The hull was painted.

6. The solid bronze propeller examined and found satisfactory; clearance of oil lubricated stern tube bearing measured and found to be .30".

EXX-MOR-005797

7. Port and starboard anchors and 330 fathoms of stud link chain were ranged, examined and found in satisfactory condition.

8. Chain locker, its pumping arrangements and hawse pipes examined and found satisfactory.

9. Equipment examined and found satisfactory.

10. Scupper and overboard discharge valves opened up, examined and found satisfactory.

11. Poop, forward and after pump room spaces were examined and found in satisfactory condition.

12. The forward deep tanks, all cargo tanks, bunker tanks and cofferdams in way were examined, hydrostatic tested and placed in satisfactory condition as follows:-

Scattered fractures in bulkhead plating and internal structures were chipped out and rewelded as found necessary; for particulars of plate renewals at this time see Item 1 of this report.

13. After peak tank, fresh water double bottom tanks and cofferdams in way were cleaned, examined, hydrostatic tested and found satisfactory.

ANNUAL SURVEY

14. Steering gear arrangements, crosshead, bearings and connections examined, telemotor rams and piping examined and found in order. Steering gear operated from bridge control and found satisfactory.

15. Watertight doors in bulkheads and closing appliances in the superstructure bulkheads and for air and sounding pipes examined and found satisfactory.

16. Coamings of ventilators to spaces below the freeboard deck and below decks of superstructures examined and found satisfactory.

17. Hatchway coamings, covers, and all their supports and means for closing examined and found satisfactory.

18. Machinery casings, guard rails and all other means of protection provided for openings and for access to crew's quarters were examined and found satisfactory.

19. No material alteration has been made in the hull, superstructures or means of closing openings in superstructures which affect the position of the load line.

20. Load line marks were verified and repainted.

21. The International Load Line Certificate Number I-17152 was renewed till October 1, 1970. See Newport News, Virginia report number LL3729 dated October 1, 1965.

22. A general examination was made of the fire extinguishing apparatus and so far as could be seen was found satisfactory.

EXX-MOR-005798

SPECIAL SURVEY OF MACHINERY

23. The L.P main turbine casing, rotor, shaft, coupling, blading, shrouding, packing, diaphragms, nozzle block, bearings, thrust were opened up, examined and found in satisfactory condition.

(a) After the rotor was cleaned and journals polished it was dynamically balanced satisfactorily.

24. The main reduction gears were examined, tooth contact checked and found satisfactory.

25. The main thrust was examined, clearances checked and all found satisfactory.

26. The main condenser was cleaned, examined, tested and found satisfactory.

27. Line shafting and bearings opened up, examined and found satisfactory.

28. The two auxiliary generator turbines, gears, bearings, thrust bearings, casings, rotors, couplings, blading, shrouding, packing, diaphragms, governor mechanism, nozzle blocks, and lube oil system were opened up under supervision of the manufacturers' representative, cleaned, examined and placed in satisfactory condition by renewing worn parts as found necessary.

29. The two auxiliary generator sets of 750 KW capacity each, together with their bearings, windings and electrical connections were cleaned, examined and found in satisfactory condition.

30. Electric cables were examined as far as practical and found satisfactory.

31. The switchboard, motors and the main and auxiliary electrical circuits were megger tested and placed in satisfactory condition by clearing all grounds and circuits with low readings.

32. The overspeed was checked also governor mechanism while the 2 turbo-generator units were running without and under loaded conditions and found satisfactory.

33. The auxiliary condenser, evaporators, feed water heater, fuel oil heaters, lube oil coolers, and air ejectors examined, tested and found in satisfactory condition.

34. Forced draft blowers were examined and found satisfactory.

35. The feed pumps and turbines driving same were opened up under supervision of the manufacturers' representative, examined and placed in satisfactory condition by renewing worn parts as found necessary.

36. Main and auxiliary pumps consisting of fire and butterworth, bilge, sanitary, auxiliary circulator and condensate, main circulator and condensate auxiliary feed, fuel oil service, fuel oil transfer general service and lubricating oil pumps were opened up, examined and placed in satisfactory condition by renewing worn parts and packing as found necessary.

EXX-MOR-005799

37. Pumping arrangements examined and found satisfactory.

38. The two steering gear pumps were examined under working conditions. Relief valves checked and found satisfactory.

39. The forced draft blowers and the air compressor were opened up, examined and found satisfactory.

40. Anchor windlass bearings, shafting, gears, pistons, cylinders and connecting rods, valves and valve gear were examined and found in satisfactory condition.

41. The port and starboard water tube boilers together with their superheaters and valves were subjected to a hydrostatic test of 850 PSI, examined externally and found satisfactory.

42. Upon completion of test the boilers, superheaters and valves were opened up, examined internally and found satisfactory.

43. Safety valves on drums and superheaters were floated under steam to their allowable working pressure and operated satisfactory.

44. Steam lines which were parted in connection with opening up turbines were examined internally and remainder of steam lines examined externally and found satisfactory.

45. A dock trial was held and the main and auxiliary machinery operated satisfactorily.

46. An automated oil firing system for the boilers was installed at this time. Control consoles were installed in the engine and boiler spaces and all necessary air, oil, steam piping and electrical wiring, controls and fittings installed under the supervision of the manufacturers' representatives and in accordance with drawings of Peabody Engineering Co. approved June 22, 1965. The equipment was tested satisfactorily during the owner's dock trial. Additional adjustments are to be made during the next voyage under the supervision of the manufacturers' representative.

47. Special Survey No. 1 Hull completed - October 1965.
Special Survey on Machinery completed - October 1965.
Annual Survey completed - October 1965.
Annual Boiler Survey completed - October 1965.
Undocked - September 25, 1965.

The foregoing surveys are considered complete subject to review by the New York Office.

48. Outstanding of this report: Item No. 3.

This vessel being considered in a seaworthy condition it is recommended that she be retained in present Class with this Bureau.

J. F. FOX - SURVEYOR

ALBERT MIDBOE - SURVEYOR

EXX-MOR-005800

FORM LL 30

AMERICAN BUREAU OF SHIPPING

FILE

REPORT OF ANNUAL LOAD LINE INSPECTION

REPORT NO.	NAME OF SHIP		DATE
LL3729	S/S "ESSO BOSTON"		OCTOBER 1, 1965
GROSS TONNAGE	**OFFICIAL NUMBER**	**PORT OF REGISTRY**	**PORT OF SURVEY**
30680	283,784	WILMINGTON, DEL.	NEWPORT NEWS, VA.
OWNERS			
HUMBLE OIL AND REFINING CO.			

ITEM EXAMINED	CONDITION	RECOMMENDATIONS — REPAIRS EFFECTED
1. HATCHWAYS Coamings, Stiffeners, stays, beams, fore and afters, carriers, covers, tarpaulins, cleats, battens, wedges and lashings	SATISFACTORY	REPAIRS EFFECTED AS RECOMMENDED
2. MACHINERY CASINGS Fiddley openings, casings, doors, sills, skylights	SATISFACTORY	"
3. FLUSH BUNKER SCUTTLES Attachments	---	
4. COMPANIONWAYS Doors, sills, fastenings	SATISFACTORY	"
5. VENTILATORS Coamings, supports, deck connections, closing arrangements	SATISFACTORY	"
6. AIRPIPES Closing arrangements	SATISFACTORY	"
7. GANGWAY, CARGO AND COALING PORTS In ship's sides and superstructures	SATISFACTORY	"
8. SCUPPERS AND SANITARY DISCHARGES Valves	SATISFACTORY	"

ITEM EXAMINED	CONDITION	RECOMMENDATIONS — REPAIRS EFFECTED
9. AIRPORTS Deadcovers	SATISFACTORY	REPAIRS EFFECTED AS [illegible]
10. GUARD RAILS OR BULWARKS	SATISFACTORY	"
11. FREEING PORTS Shutters, bars	-----	
12. PROTECTION AND ACCESS TO CREW'S QUARTERS Gangways	SATISFACTORY	"
13. LIFE LINES	SATISFACTORY	"
14. END BULKHEADS OF SUPERSTRUCTURES Closing appliances and fastenings	SATISFACTORY	"
15. TIMBER TANKER AND SPECIAL TYPE Supplementary fittings	SATISFACTORY	"
16. LOAD LINE MARKS	SATISFACTORY	REPAINTED

I have surveyed the above mentioned ship and am satisfied:—

(i) that the fittings and appliances for the protection of openings, the guard rails, the freeing ports, and the means of access to the crew's quarters have been maintained in an effective condition, and

(ii) that no alterations have been made to the hull or superstructures which would affect the calculation determining the position of the load lines.

ANNUAL:—

I have endorsed the load line certificate number_____as follows:-

Signature	Place	Date

RENEWAL:—

I have renewed the load line certificate number I-17,152 as follows:-

Signature	Place	Date
Albert Hidbee	Newport News, Va.	October 1, 1965

Renewed until October 1, 1970

Albert Hidbee — Surveyor, American Bureau of Shipping

This Report is issued subject to the condition that it is understood and agreed that neither the Bureau nor any of its Committees is under any circumstances whatever to be held responsible for any inaccuracy in any report or certificate issued by this Bureau or its Surveyors or in any entry in the Record or other publication of the Bureau or for any error of judgement, default or negligence of its Officers, Surveyors or Agents.

Fee $ 25.00	This vessel is classed American Bureau of Shipping
Expenses -	Has this survey been carried out at the same time as a corresponding survey required for maintenance of [illegible] and for which a fee has been charged? Yes
Total $ 25.00	If so, give report number_____
	This survey was requested by: Owner's Representative

" Yes - Issuance of Renewal L.L. Certificate by B.Y.U.

PRINTED IN U. S. A.

EXX-MOR-005802