SERVICE BULLETIN

JAN. 9, 1970 **No.** Q-539 **under** BRAKES

FOR BRANCHES AND DISTRIBUTORS ONLY.

PLAINTIFF'S EXHIBIT

MAC-7

BRAKE LINING KITS
SWD592, 5921, 595, 5951, RAD703, 705
(DM & R Models, As Applicable)

PURPOSE To furnish service brake lining kit numbers for replacement of all previously approved lining kits for noted units.

INFORMATION Although originally conceived for applications considered off-highway by nature, the units affected have increasingly been operated at highway speed in dumper/mixer use. The replacement linings will provide increased brake effectiveness to meet these more demanding field operating conditions.

Unit application, brake size and respective kit part numbers are as tabulated.

Unit	Brake Size	Lining Kit No.
SWD592, 595 RAD703, 705	17-1/4 x 6	202SMH171
SWD5921, 5951	17-1/4 x 7	202SMH172

Each kit contains material for relining the brakes on a single axle. Both kits listed have FORWARD and REVERSE blocks of the same mix.

Due to the different characteristics of the new lining it is not interchangeable on an individual wheel basis with that of the previous type. Where a single drive axle is employed and one wheel brake assembly requires relining, both assemblies must be serviced with the new linings. In the case of dual axle drive bogies, good maintenance practice dictates replacement of all linings at the same period. Along with other important factors, this will help to achieve the brake balance necessary for maximum braking performance.

In extreme circumstances, where replacement of linings on all four wheel assemblies is not possible, it is absolutely essential that both ends of the same axle receive the same type linings.

RECOMMENDATION When brake relining becomes necessary on affected units, use only those kits listed for increased brake effectiveness. Do not mix linings on any single axle or bogie.

Parts are available now.

PRINTED IN U.S.A.

SERVICE BULLETIN

JAN. 28, 1970 **No.** Q-540 **under** BRAKES

FOR BRANCHES AND DISTRIBUTORS ONLY.

AIR PRESSURE WARNING SWITCHES
All Mack Western Models
(FL, FS, RL, RS Series)

PURPOSE To direct attention to the possibility of incorrect installation of air pressure switches in subject chassis.

INFORMATION The switches involved actuate the low air pressure warning buzzer and auxiliary spring brake warning light. Nominally 70 psi, 1MR1318-P2 has an operating range of 68 to 75 psi and actuates the low air pressure warning buzzer.

1MR1318-P1 is a 60 psi switch with an operating range of 58 to 65 psi and actuates auxiliary spring brake warning light.

Both switches are identical in appearance except that the outer terminal nut on the P2 is color coded blue. The P1 has no color identification.

INSPECTION PROCEDURE

To check the proper placement and operating condition of these switches, build up truck air system to governor cut-out pressure. Slowly bleed air from system.

The switches should operate in the following sequence:

1. When air pressure reaches nominal 70 psi range, the low pressure warning buzzer should operate.

2. Further reduction in pressure to 60 psi range should then actuate the auxiliary brake warning light.

If these devices operate in reverse order, then air pressure switches will have to be reversed in their location.

Where air switches do not operate in their specified operating range, install a test air gage in the air system to verify that the truck air pressure gage is correct. Any switch that does not function within given range, or gage that does not register properly, should be replaced.

Inspections should be conducted at next scheduled service period, as part of routine maintenance. No allowance for checking is granted. However, if the switches were improperly installed, a maximum of one hour labor may be recovered via standard RWR procedure.

RECOMMENDATION All Mack Western models released prior to 2/10/69 were subject to possible improper switch installation. Relocate low air pressure buzzer and auxiliary spring brake warning light switches that do not operate in correct sequence.

PRINTED IN U.S.A.

SERVICE BULLETIN

MAY 19, 1970 **No.** Q541 **under** BRAKES

FOR BRANCHES AND DISTRIBUTORS ONLY.

SLACK ADJUSTERS
F, R, U and MB Models with
(RAD606 and RAD704 Axles)

PURPOSE To provide means of extending service life of slack adjusters on RAD606 and RAD704 axles.

INFORMATION Service life of the slack adjusters on RAD606 and RAD704 axles can be increased by replacing type 20 slack adjusters, original service equipment, with type 30 slack adjusters. Direct replacement of slack adjusters cannot be completed until the lower bolt hole on the air chamber mounting bracket is spotfaced to 1.380 in. dia. x 0.380 in. See illustration.

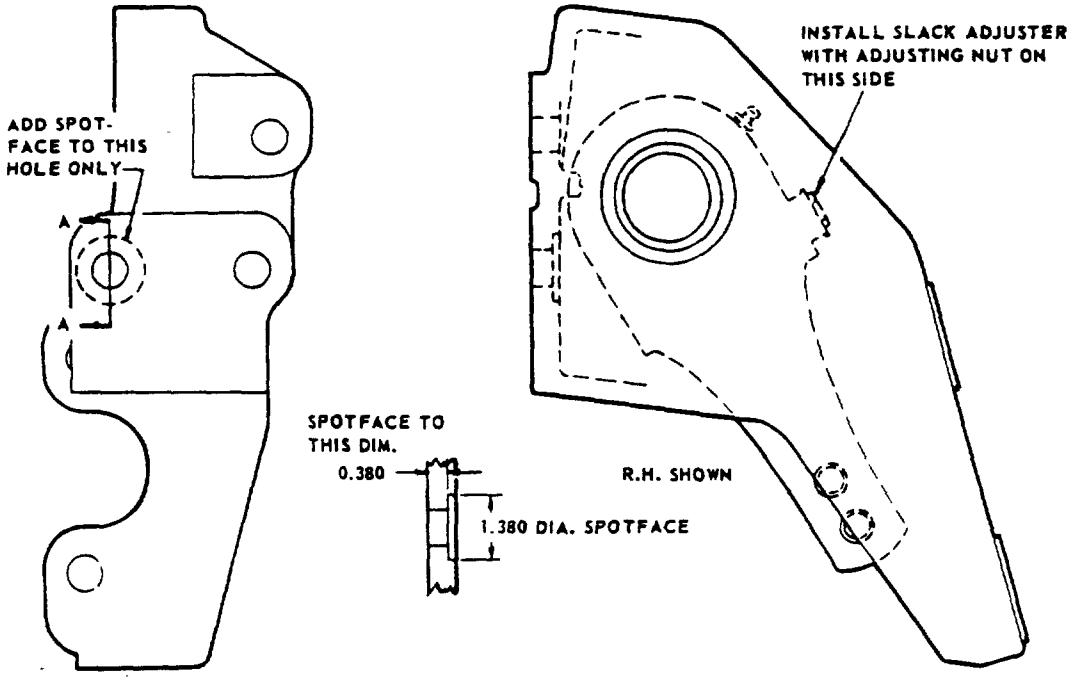

The air chamber mounting bracket modification is necessary to provide required slack adjuster clearance.

Parts required:

Qty.	Part No.	Description	Removed Parts
2	25QDA334	Slack Adjuster Complete	25QDA118A

RECOMMENDATION Installation of type 30 slack adjusters on RAD606 and RAD704 axles institutes a product improvement and is available at customers option and expense. Parts are available now.

PRINTED IN U.S.A.

SERVICE BULLETIN

JULY 23, 1971 **No.** Q543 **under** BRAKES

FOR BRANCHES AND DISTRIBUTORS ONLY. (Supersedes Bulletin dated JAN. 18, 1971)

BRAKE LINING CRACKING
(All Models with SWD Bogies and 16-1/2 x 6 in. Brakes)

PURPOSE To advise field of attaching part improvement made in the 202SMH185 "Velvetouch" brake lining kit.

INFORMATION All steel attaching parts have replaced brass capscrews and elastic stopnuts. This change was made to provide a secure and rigid assembly. The lining kit part number 202SMH185 was not affected by this change.

Qty.	Part No.	Description	Replaces
32	21AX812**	Locknut	21AX801
32	3AX527	Capscrew	5AX120

* Quantity shown is for one axle.
** Torque 21AX812 locknut 25 to 28 lb. ft. Refer to Service Bulletin Q542 under BRAKES for latest cast iron drum information.

RECOMMENDATION Use lining kit 202SMH185 and improved attaching parts to correct brake lining cracking problems. Complaints of loose, previously installed 202SMH185 lining can be corrected by replacing brass capscrews and elastic stopnuts with steel capscrews and locknuts. Parts will be available by August 9, 1971.

PRINTED IN U.S.A.

SERVICE BULLETIN

FEB. 18, 1972 **No.** Q544 **under** BRAKES

FOR BRANCHES AND DISTRIBUTORS ONLY. (Supersedes Bulletin dated Dec. 2, 1971)

BRAKE CHATTER CORRECTION
(DM, F, MB, R and U with SWD56, 57 and 75 Bogie Using Six or Seven Inch Brake Shoes)

PURPOSE To provide information correcting brake chatter complaints.

INFORMATION Some reports of brake chatter have been received. Investigation revealed brake chatter was eliminated by replacing wear plate type brake shoes with roller type brake shoes on front bogie axle, only. This is a direct parts replacement requiring removal of existing brake shoe parts and installation of parts as listed.

Parts required:

Six Inch Brakes

* Qty.	Part No.	Description
4	2QD4158	Brake Shoe (malleable iron)
4	55MX111-P1	Roller
4	7AX71	Screw
4	31AX436	Pin
4	80AX744	Bushing
4	31AX506	Pin, Return Spring

* Quantity for one axle.

NOTE

It is recommended 202SMH173 Brake Lining be used in conjunction with six inch brake shoes.

Seven Inch Brakes

* Qty.	Part No.	Description
2	2QD4153-P1	Brake Shoe RH (malleable iron)
2	2QD4154-P1	Brake Shoe LH (malleable iron)
4	55MX111-P1	Roller
4	7AX71	Screw
4	31AX436	Pin
8	80AX744	Bushing
4	31AX506	Pin, Return Spring

* Quantity for one axle.

2QD4153-P1 is used on RH lower and LH upper.
2QD4154-P1 is used on LH lower and RH upper.

(Continued Over)

PRINTED IN U.S.A.

NOTE

It is recommended 202SMH174 Brake Lining be used in conjunction with seven inch brake shoes.

Apply grease to roller and pin at assembly. Stake roller pin lock screw with prick punch to lock in place.

When converting from aluminum type brake shoes to malleable iron type brake shoe, on either six or seven inch brakes, return spring 58AX96 must replace existing spring 58AX117 because of length differences.

RECOMMENDATION Brake chatter is to be corrected as described herein, using roller type brake shoe on front bogie axle, only. Field handling will be based on normal warranty. Warranty coverage will be based on first report of problem.

SERVICE BULLETIN

MAR. 3, 1972 **No.** Q547 **under** BRAKES

FOR BRANCHES AND DISTRIBUTORS ONLY.

BRAKE SPIDER REPLACEMENT
(Mack Western Chassis with Rockwell Standard "P" Series Brakes)

PURPOSE To announce release of a replacement brake spider for subject chassis.

INFORMATION A replacement 8-mounting hole brake spider has been made available for use on subject chassis fitted with square tube style axle housing only, and 16-mounting hole brake spider. The 8-mounting hole brake spider is directly interchangeable and, therefore, requires no special service modification instructions. The 8-mounting hole brake spider is recommended as a replacement part for any damaged 16-mounting hole brake spider as applied on subject chassis.

Parts required:

Qty. *	Part No.	Description
1	8235-A3211N2224	Brake Spider (left front wheel and rear right wheel)
1	8235-A3211M2223	Brake Spider (right front wheel and left rear wheel)
8	43RU1590-P17	Bolt
16	35AX1367	Flat Washer (hardened)
8	21AX792	Stop Nut

* The quantities as listed are for one wheel brake spider replacement requiring either one 8235-A3211N2224 brake spider or one 8235-A3211-M2223 brake spider.

Place one 35AX1367 flat washer under the head and one on the nut end of 43RU1590-P17 bolt prior to securing the 8-mounting hole brake spider. Torque bolt 225 lb. ft.

RECOMMENDATION If replacement of 16-mounting hole brake spider is required, use 8-mounting hole brake spider as described herein. Normal brake warranty will apply.

Parts are available now.

PRINTED IN U.S.A.

SERVICE BULLETIN

APRIL 12, 1973 **No.** Q550 **under** BRAKES

FOR BRANCHES AND DISTRIBUTORS ONLY.

BRAKE ARRANGEMENT IMPROVEMENTS
(All Chassis Models with FA532C, FA535C, FA600C, FA601C, FA703C or FA704C Front Axle)

PURPOSE To inform field of various brake arrangement improvements on subject front axles.

INFORMATION Design changes have been made with respect to the brake spider and brake anchor pins. The brake spider flange thickness was increased to provide for heavy duty use. The brake anchor pins are designed with integral groove for snap rings, providing positive pin retention. These changes were made to improve the operational efficiency on Rockwell-Standard air brake assemblies.

Parts required:

FA532C and FA535C Front Axles

Qty.	Part No.	Description	Replaces
*Ref.	1QDA4165A (RH)	Brake Assembly Complete	1QDA4165 (RH)
*Ref.	1QDA4166A (LH)	Brake Assembly Complete	1QDA4166 (LH)
2	8235-A-3211-H-2400	Spider Service Assembly	8235-A-3211-H-2244
2	8235-A1-3211-H-2400	** Spider	8235-3211-H-2244
4	8235-1225-N-378	** Spider and Brkt. Bushing	8235-1225-N-378
2	344SZ95	** Spider and Brkt. O-ring	344SZ95
2	8235-1705-D-290	** Spider and Brkt. Retainer	8235-1705-D-290
2	8235-1779-J-1024	** Spider and Brkt. Seal	- - - - -
2	8235-1225-U-827	** Spider and Brkt. Bushing (Anchor Pin)	- - - - -
4	8235-1259-Q-251	Anchor Pin	301SM86
8	342SQ26	Retainer	342SQ26
4	361SZ679	Lockscrew	- - - - -
2	8235-LW-1912	Lockwire (obtain locally)	- - - - -

* Complete brake assembly listed for reference and the parts as listed are only included parts affected by design changes.

** Parts included in spider service assembly.

(Continued Over)

PRINTED IN U.S.A.

FA600C and FA601C Front Axles

Qty.	Part No.	Description	Replaces
*Ref.	1QDA4167A-P1 (RH)	Brake Assembly Complete	1QDA4167-P1 (RH)
*Ref.	1QDA4168A-P1 (LH)	Brake Assembly Complete	1QDA4168-P1 (LH)
2	8235-A-3211-J-2402	Spider Service Assembly	8235-A-3211-F-2242
2	8235-A1-3211-J-2402	** Spider	8235-3211-F-2242
4	8235-1225-N-378	** Spider and Brkt. Bushing	8235-1225-N-378
2	344SZ95	** Spider and Brkt. O-ring	344SZ95
2	8235-1705-D-290	** Spider and Brkt. Retainer	8235-1705-D-290
2	8235-1779-J-1024	** Spider and Brkt. Seal	- - - - -
4	8235-1225-U-827	** Spider and Brkt. Bushing (Anchor Pin)	- - - - -
4	8235-1259-Q-251	Anchor Pin	301SM86
8	342SQ26	Retainer	342SQ26
4	361SZ679	Lockscrew	- - - - -
2	8235-LW-1912	Lockwire (obtain locally)	- - - - -

* Complete brake assembly listed for reference and the parts as listed are only included parts affected by design change.

** Parts included in spider service assembly.

FA703C and FA704C Front Axles

Qty.	Part No.	Description	Replaces
*Ref.	1QDA4167A-P2 (RH)	Brake Assembly Complete	1QDA4167-P2 (RH)
*Ref.	1QDA4168A-P2 (LH)	Brake Assembly Complete	1QDA4168-P2 (LH)
2	8235-A-3211-J-2402	Spider Service Assembly	8235-3211-F-2242
2	8235-A1-3211-J-2402	** Spider	8235-3211-F-2242
4	8235-1225-N-378	** Spider and Brkt. Bushing	8235-1225-N-378
2	344SZ95	** Spider and Brkt. O-ring	344SZ95
2	8235-1705-D-290	** Spider and Brkt. Retainer	8235-1705-D-290
2	8235-1779-J-1024	** Spider and Brkt. Seal	- - - - -
2	8235-1225-D-828	** Spider and Brkt. Bushing (Anchor Pin)	- - - - -
2	8235-1259-Q-251	Anchor Pin	301SM86
8	342SQ26	Retainer	342SQ26
4	361SZ679	Lockscrew	- - - - -
4	8235-LW-1912	Lockwire (obtain locally)	- - - - -

* Complete brake assembly listed for reference and the parts as listed are only included parts affected by design change.

** Parts included in spider service assembly.

NOTE

New complete brake assemblies will service old.
New spiders will service old with the addition of new anchor pins with new snap rings and anchor pin set screws.
New anchor pins (with new snap rings) will service old.

RECOMMENDATION This bulletin is issued to inform the field of various brake arrangement improvements as applied on subject front axles. Use improved design parts when service is required.

CIRCULATION

Service Manager	
Shop Foreman	
Night Foreman	
Night Foreman	
Inspector Leadman	
Inspector Leadman	
Inspector Leadman	
Unit Overhaul Room	
Shop Office	

SERVICE BULLETIN

JUNE 15, 1973 **No.** Q549 **under** BRAKES

FOR BRANCHES AND DISTRIBUTORS ONLY. (Supersedes Bulletin dated MAR. 30, 1973)

CAM BRAKE ASSEMBLY IMPROVEMENTS
(All Chassis with SW76C, SW56C, SW57C, SW571C, SW573C, SW59C and SW68C Series Bogies)

PURPOSE To inform field personnel of improvements made to brake assemblies on subject bogies.

INFORMATION The improvements consist of changes to anchor pin and spider designed to improve the operational efficiency, retention of pin in spider and to facilitate removal of pin after long service. New anchor pins are used which have a flat that the set screw engages to more securely lock pin in spider. In addition, the snap ring grooves are of rectangular cross section and are used with new rectangular section snap rings for better retention. To prevent anchor pin becoming "frozen" in spider due to corrosion, the new spiders incorporate a stainless steel bushing in anchor pin bore.

Brake assemblies incorporating these improvements are identified by a raised part number as shown in parts lists. Note that two types of assemblies are required; one for the right hand front rear axle or left hand rear rear axle and one for left hand front rear axle or right hand rear rear axle. Grade 8 mounting bolts and hardened flat washers are used for all new assemblies.

Time allowance to change one brake assembly is 3.5 hours for all bogies.

NOTE

Service kits are available for SWS56 and SWS57 series bogies only. These kits provide all necessary parts to convert existing brake assemblies to improved design. Each kit will service one wheel.

SW76C, SW56C, SW57C, SW571C and SW573C
To convert these brake assemblies to improved design, it will be necessary to order one kit for each wheel to be serviced. Two types of kit are available; one for right hand front rear axle and one for left hand rear rear axle. Brake assemblies involved are shown in following list:

New Assy. No.	Description	Replaces
1QDA4159A-P1	Air Brake Assy. (RH Front & LH Rear)	1QDA4159-P1
1QDA4159A-P2	Air Brake Assy. (LH Front & RH Rear)	1QDA4159-P2
1QDA4159A-P3	Air Brake Assy. (RH Front & LH Rear)	1QDA4159-P3
1QDA4159A-P4	Air Brake Assy. (LH Front & RH Rear)	1QDA4159-P4

(Continued Over)

CIRCULATION

Service Manager	
Shop Foreman	
Night Foreman	
Night Foreman	
Inspector Leadman	
Inspector Leadman	
Inspector Leadman	
Unit Overhaul Room	
Shop Office	

PRINTED IN U.S.A.

Parts required (quantity shown is for one wheel):

Qty.	Part No.	Description	Replaces
1	8235-MPS-1984	Brake Service Kit (RH Front & LH Rear)	- - -
1	8235-MPS-1985	Brake Service Kit (LH Front & RH Rear)	- - -
8	3AX1810	Bolt, Brake Spider Mtg.	3AX1299
8	* 35AX682	Washer, Brake Spider Mtg.	- - -
8	21AX718	Nut, Brake Spider Mtg. Bolt	20AX7

NOTE: Torque spider mounting bolts 290 to 320 lb. ft.

The brake service kit consists of following parts. Except for the brake spider assemblies, parts listed are common to both kits.

Qty.	Part No.	Description	Replaces
1	8235-A-3211-N-2406	Brake Spider Assy. (Kit 8235-MPS-1984 RH Rear & LH Front)	8235-A-3211-N-2224
1	8235-A-3211-P-2408	Brake Spider Assy. (Kit 8235-MPS-1985 LH Rear & RH Front)	8235-A-3211-M-2223

Following parts are common to both kits:

2	8235-1259-Q-251	Anchor Pin	1759-E-31 or 301SM86
4	228SM16	Snap Ring	1218-M-13 or 364SQ21
2	6AX813	Cap Screw	- - - -
1	8235-LW-1912	Lockwire (obtain locally)	- - - -
1	** 364SM27	Return Spring	364SM27

* If not available use washer 35AX1252

** No change in part number. Identification is by color only. Old return spring is black, new return spring is green.

SW59C Series Bogies

Parts required to update these brake assemblies must be ordered individually as shown in "Parts required" list. Brake assemblies affected are shown in following list for reference purposes.

New Assy. No.	Description	Replaces
1QDA4180A-P1	Air Brake Assy. (RH Front & LH Rear)	1QDA4180-P1
1QDA4180A-P2	Air Brake Assy. (LH Front & RH Rear)	1QDA4180-P2

(Continued on Sheet #2)

Parts required (quantity shown is for one wheel):

Qty.	Part No.	Description	Replaces
1	8235-A-3211-A-2419	Spider Service Assy. (RH Front & LH Rear)	8235-A-3211-D-2240
1	8235-A-3211-Z-2418	Spider Service Assy. (LH Front & RH Rear)	8235-3211-C-2239
2	***8235-1259-R-252	Anchor Pin	8235-1259-G-241
4	***228SM16	Snap Ring	364SQ21
2	6AX813	Capscrew	- - - -
1	8235-LW-1912	Lockwire (obtain locally)	- - - -
1	#8235-2258-H-528	Return Spring	8235-2258-H-528
2	3AX1456	Brake Spider Mtg. Bolt	3AX1447
6	3AX1811	Brake Spider Mtg. Bolt	3AX1751
8	36AX9	Lockwasher	36AX9

NOTE: Torque spider mounting bolts 365 to 470 lb. ft.

*** These parts must be used to obtain full benefit of new arrangement.
# See illustration for means of identifying new spring.

Following parts are included in spider service assemblies and listed here for reference. Except for spider, parts are same on both assemblies.

Qty.	Part No.	Description	Replaces
1	8235-A-3211-A-2419	Spider Assy. (RH Front & LH Rear)	8235-3211-D-2240
1	8235-A-3211-Z-2418	Spider Assy. (LH Front & RH Rear)	8235-3211-C-2239

Following parts are common to both assemblies:

1	8235-1225-N-378	Bushing	8235-1225-N-378
1	344SZ95	O-ring	3780-A-131 or 344SZ95
1	8235-1705-D-290	Retainer	1705-D-290
1	8235-1779-J-1024	Seal	1779-J-1024
2	8235-1225-U-827	Bushing, Anchor Pin	- - - -

(Continued Over)

SW68C Series Bogies

Parts required to update these brake assemblies must be ordered individually as shown in "Parts required" list. Brake assemblies affected are shown in following list for reference purposes.

New Assy. No.	Description	Replaces
1QDA4160A-P1	Air Brake Assy. (RH Front & LH Rear)	1QDA4160-P1
1QDA4160A-P2	Air Brake Assy. (LH Front & RH Rear)	1QDA4160-P2

Parts required (quantity shown is for one wheel):

Qty.	Part No.	Description	Replaces
1	8235-A-3211-X-2416	Spider Service Assy. (RH Front & LH Rear)	8235-A-3211-U-2231
1	8235-A-3211-Y-2417	Spider Service Assy. (LH Front & RH Rear)	A-3211-V-2232X
2	%8235-1259-R-252	Anchor Pin	- - - - -
4	%228SM16	Snap Ring	- - - - -
2	6AX813	Capscrew	- - - - -
1	8235-LW-1912	Lockwire (obtain locally)	- - - - -
1	@8235-2258-H-528	Return Spring	8235-2258-H-528
8	3AX1809	Brake Spider Mtg. Bolt	3AX1299 or 3AX1770
8	21AX718	Brake Spider Mtg. Bolt Nut	21AX718
8	35AX682	Washer	- - - - -
8	36AX7	Lockwasher	- - - - -

NOTE: Torque spider mounting bolts 290 to 320 lb. ft.

% These parts must be used to obtain full benefit of new arrangement.

@ See illustration for means of identifying new spring.

Following parts are included in spider service assemblies and are listed here for reference. Except for spider, parts are same for both assemblies.

Qty.	Part No.	Description	Replaces
1	8235-A-3211-X-2416	Spider Assy. (RH Front & LH Rear)	- - - - -
1	8235-A-3211-Y-2417	Spider Assy. (LH Front & RH Rear)	3211-V-2232X

Following parts are common to both assemblies:

Qty.	Part No.	Description	Replaces
2	8235-1225-N-378	Bushing	1225-N-378
1	344SZ95	O-ring	3780-A-131
1	8235-1705-D-290	Retainer	1705-D-290
1	8235-1779-J-1024	Seal	1779-J-1024
2	8235-1225-U-827	Bushing, Anchor Pin	- - -

RECOMMENDATION This bulletin describes the brake arrangement improvements for subject bogies. Use improved parts to correct field failures on affected parts.

Warranty: An extended warranty program has been issued "WDPL #27".

Parts are available now.



OLD RETURN SPRING
35 COILS WITH IDENTICAL ENDS



NEW RETURN SPRING
33 COILS, UNEQUAL LENGTH ENDS AND 180° HOOKS

RETURN SPRING IDENTIFICATION
SWS59 and SWS68C SERIES BOGIES

SERVICE BULLETIN

JULY 30, 1973 **No.** Q549a **under** BRAKES

FOR BRANCHES AND DISTRIBUTORS ONLY.

BRAKE SHOE SUPPORT
(SW56, 76, 57, 571 and 573 Series Bogies with Cam Brakes)

PURPOSE To advise of a brake shoe support which can be installed on existing brake assemblies to extend service life.

INFORMATION Current production brake assemblies have a support which stabilizes the brake shoe and extends life of shoe and spider anchor pin bore and camshaft splines and bushing. The support consists of a spring clip mounted on a separate bracket which grips the brake shoe and holds it in alignment. See following illustration for arrangement. The support is attached with spider mounting bolts and can be installed on brake assemblies now in service.

Brake assemblies affected are 1QDA4159 or 1QDA4159A-P1, P2, P3 and P4. Parts required to add the shoe supports to existing assemblies are available in kit form. Kit number is:

Qty.	Kit Number	Description
*	8235-MPS2008	Brake Shoe Support Kit

* Each kit services one axle (2 wheels)

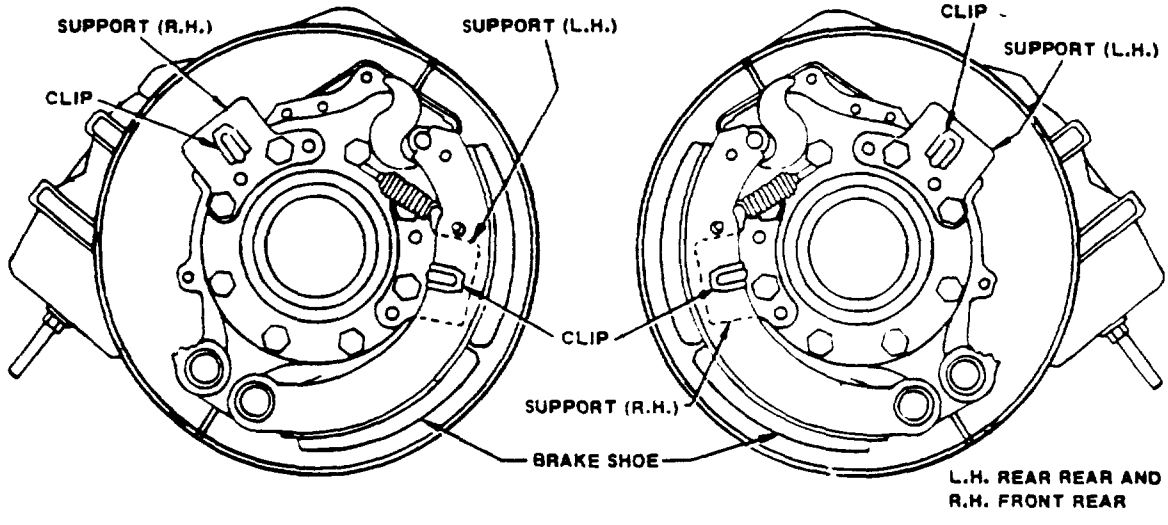

BRAKE ASSEMBLY 1QDA 4159A-P2 AND P4
(L.H. FRONT REAR AND R.H. REAR REAR)

BRAKE ASSEMBLY 1QDA 4159A-P1 AND P3
(L.H. REAR REAR AND R.H. FRONT REAR)

(Continued Over)

PRINTED IN U.S.A.

The kit consists of following parts:

Qty.	Part Number	Description
2	8235-3280-W-6081	Support, LH
2	8235-3280-Z-6136	Support, RH
8	8235-2203-L-6798	Washer, 1/4" Spacer
8	8235-2203-K-6797	Shim, 1/16"
8	8235-2203-J-6796	Shim, 1/32"
4	45SM15	Clip
4	1AX374	Capscrew
4	20AX1	Nut
4	36AX1	Lockwasher

Instructions are furnished with each kit; however, they are reproduced in this bulletin for informational purposes. Note that two procedures are given. One applies to non-current spiders with 1/2 inch thick flange and the other to current spiders with 3/4 inch thick flange. Also note that two of the four support mounting holes are not used.

NOTE

Refer to Service Bulletin Q549 under BRAKES for other improvements made to these brake assemblies. It is recommended that these improvements be incorporated along with the shoe supports to provide maximum brake life with minimum time and expense.

RECOMMENDATION Install brake shoe supports at time of regular brake service, especially in cases where short life of spider or shoe anchor pin bore is experienced or if camshaft endplay or bushing wear is a problem.

Warranty: An extended warranty program has been issued per WDPL #27.

ULATION

ce ger	
nan	
nan	
nan	
tor nan	
tor nan	
tor nan	
ver- oom	

MACK 34, 38, and 44.000 Lb. Bogie (Mack SW-56C, 57C, 76C, 571C & 573C)

INSTALLATION INSTRUCTIONS:

1. With 1/2 inch thick brake spider flange
   a. Remove four (4) mounting bolts shown.
   b. Select and position 1/4 inch spacer washer.

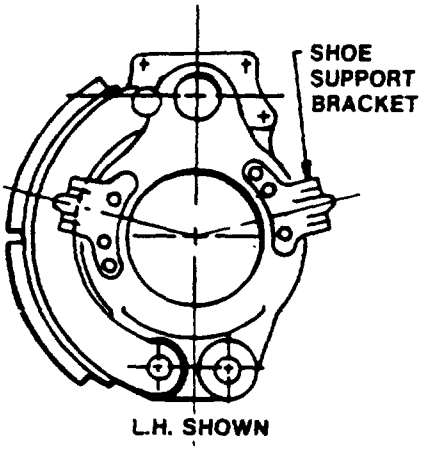

L.H. SHOWN

For L.H. Brake
3280-W-6081 Shoe Support Pad

For R.H. Brake
3280-Z-6136 Shoe Support Pad

   c. Use feeler and measure clearance between shoe web and shoe support bracket. (See View A).
   d. Select proper thin shim washers as measured. Install shim washer under support pad at the mounting bolt to nearest .032.
   e. Retorque mounting bolts to 210-270 ft.lb.
   f. Bolt shoe spring clip to brackets with 1/4 inch diameter capscrew, lockwasher and nut provided. (See View B).
   g. Position shoe in proper working position under spring clip. Clip should provide approximately 65 lbs. lateral support force against the shoe support bracket. Check for free return at brake shoe against camhead by normal shoe return spring action. Lubricate if necessary.

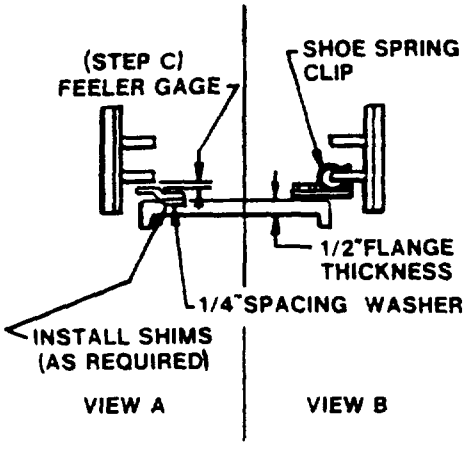

2. With 3/4 inch thick brake spider flange
   a. Remove cast spider material shown in View C flush with mounting face both sides shown shaded.
   b. Follow steps a through g above but do not use 1/4 spacer washer.

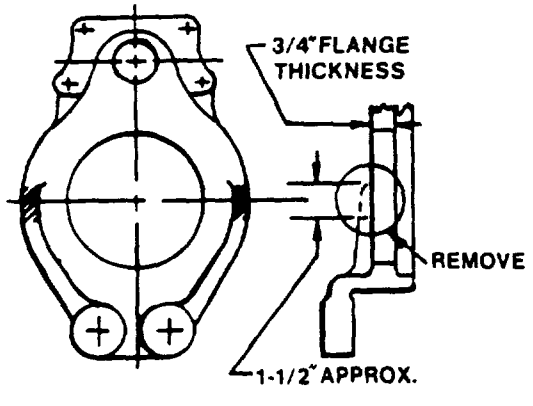

VIEW C

SAMPLE INSTRUCTION

SHEET

SERVICE BULLETIN

OCT. 9. 1973 **No.** Q551 **under** BRAKES

FOR BRANCHES AND DISTRIBUTORS ONLY.

SLACK ADJUSTER CLEARANCE
(RL, RS, FL, FS)

PURPOSE To provide slack adjuster clearance on subject models.

INFORMATION Due to a possible interference between the right hand slack adjuster and the beam hanger on all Mack SWH 56/57 (Hendrickson suspension) and SWV 56/57 (vendor suspension other than Hendrickson) bogies using cam brakes 1QDA39301/302, the beam hangers must be ground in the area of the slack adjusters as illustrated.

Procedure:

1. Remove clevis pin at slack adjuster.
2. Remove snap ring and washer from upper end of slack adjuster.
3. Remove slack adjuster.
4. Grind off bracket as sketch indicates.
5. Install slack adjuster.
6. Install washer and snap ring at upper end.
7. Install clevis pin at lower end.

RECOMMENDATION This should be undertaken only in the event of a possible interference. Normal warranty shall apply.

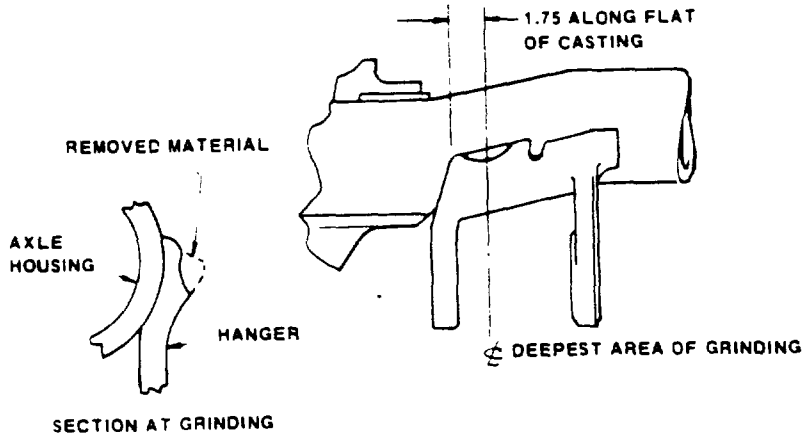

CIRCULATION

Service Manager
Shop Foreman
Night Foreman
Night Foreman
Inspector Leadman
Inspector Leadman
Inspector Leadman
Unit Overhaul Room
Shop Office

PRINTED IN USA

Mack

SERVICE BULLETIN

MAY 31, 1974 **No.** Q552 **under** BRAKES

FOR BRANCHES AND DISTRIBUTORS ONLY. (Supersedes Bulletin dated JAN. 4, 1974)

CHASSIS AFFECTED ALLENTOWN ☑ HAYWARD ☑ OAKVILLE ☑

BRAKE CHAMBER
(All with SWW69W Bogie)

PURPOSE To inform the field of an improved method for locking brake chamber to plunger housing.

INFORMATION Brake assemblies 1QDA4161-P1 and P2 and 1QDA-4162-P1 and P2 now incorporate a collet nut to lock the brake chamber in plunger housing. This arrangement replaces the setscrew and nylon pellet originally used as a locking device.

The collet nut can be installed on brake assemblies originally equipped with a setscrew if improved locking ability is required. A new non-pressure housing is required for this installation because original housing has insufficient threads to accept nut.

Parts required:

Qty.	Part Number	Description
8	8235-1227-H-762	Collet Nut
4	8235-A3780-X-414	Non-pressure Housing (Short)
4	8235-A3780-Z-416	Non-pressure Housing (Long)
*	8235-A3711-D-1408	Spider, R.H.
*	8235-A3711-E-1409	Spider, L.H.

* Required only if threads in existing spider are worn or damaged.

Procedure

1. Cage the spring brakes, using vehicle air to compress spring. Disconnect air lines. Remove setscrew and nylon pellet from plunger housing, then remove chamber assembly.

2. Remove existing non-pressure housing and reassemble chamber with new housing. Do not tighten clamp ring. Install collet nut on non-pressure housing with chamfered side towards spider end of tube. See illustration.

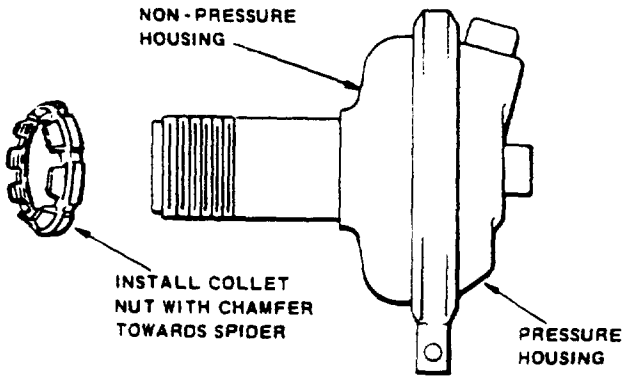

CIRCULATION

Service Manager	
Shop Foreman	
Night Foreman	
Night Foreman	
Inspector Leadman	
Inspector Leadman	
Inspector Leadman	
Unit Overhaul Room	
Shop Office	

PRINTED IN U.S.A.

3. Apply non-hardening sealer to first three threads of non-pressure housing. Using standard assembly procedure, screw chamber assembly into plunger housing until it bottoms. Be sure collet nut is loose. Align pressure housing ports with air lines and tighten clamp ring. Connect air lines and uncage spring brake.

4. Apply brakes and maintain full pressure while tightening collet nut. Seat nut against plunger housing by hand then, using a hammer and drift, tighten nut 1-1/2 notches (3/16 turn).

5. Plug setscrew hole in plunger housing. If a suitable plug is not available, cut end off of original setscrew and reinstall it.

RECOMMENDATION Install collet nut and new non-pressure housing if the setscrew does not provide satisfactory retention of brake chamber. Normal warranty will apply. All parts available September, 1974.

SERVICE BULLETIN

SEPTEMBER 5, 1974 **No.** Q537 **under** BRAKES

FOR BRANCHES AND DISTRIBUTORS ONLY. (Supersedes Bulletin dated NOV. 25, 1968)

CHASSIS AFFECTED ALLENTOWN ☑ HAYWARD ☑ OAKVILLE ☑

HAND CONTROL VALVE
Brake vs. Spring Brake Piping Arrangement
(All 4 & 6 Wheel Models (Except Tractors))

PURPOSE To outline air piping modification that may be necessary when hand control valves are used in conjunction with auxiliary spring brakes.

INFORMATION Original piping of some vehicles with auxiliary spring brakes and hand control valve, permitted compounding of braking force on rear axle brake parts. This occurred when hand control valve was used after spring brakes were already applied.

If damage such as broken brake drums, slack adjusters, camshafts, etc., is noted, the brake system should be checked for possibility of compounding and modified if necessary. The piping arrangement described in this bulletin will release the spring brakes when hand control valve is actuated.

NOTE: There are two exceptions to the need for this modification: Tractors and other vehicles equipped with either Rockwell-Standard Failsafe units or Bendix-Westinghouse model DD3 safety actuators.

To ascertain whether piping modification is required, proceed as follows:

1. Apply auxiliary spring brake.
2. With piggy-back type, remove air line at spring brake side of chamber.

   NOTE: This step is not necessary with frame mounted units as standard brake application and spring brake release can be observed visually.
3. Apply hand control valve. Air should expel from open line or, in case of frame mounted units, movement of parts should be observed. Release hand control valve.
4. Apply foot brake and check as in previous step.

If action is not evident as explained in Steps 3 & 4, piping modification will be necessary.

Preliminary to any work being performed, block wheels to prevent vehicle movement. Open reservoir drain cocks and fan brake pedal until air gage reads 0 psi. Close drain cock.

All necessary precautions and workmanlike practices are to be followed in the repiping. Keep dirt from entering lines, do not make sharp bends, pitch lines to drain back to reservoir and avoid possible chafe points.

CIRCULATION

Service Manager	
Shop Foreman	
Night Foreman	
Night Foreman	
Inspector Leadman	
Inspector Leadman	
Inspector Leadman	
Unit Overhaul Room	
Shop Office	

(Continued Over)

PRINTED IN U.S.A.

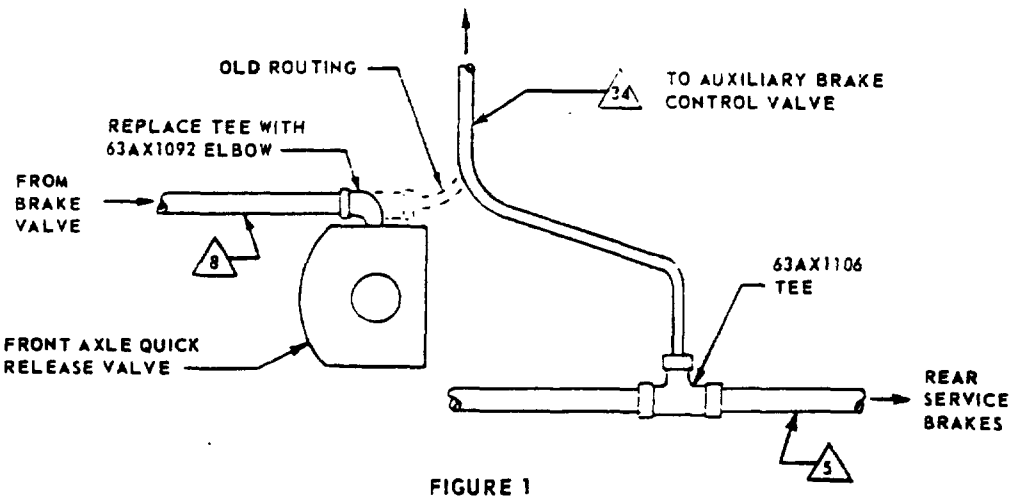

FIGURE 1
AUXILIARY BRAKE CONTROL VALVE PIPING
R MODELS - TYPICAL

At front axle quick release valve, disconnect tee connection joining lines 8 & 34. Replace tee with 63AX1092 elbow. Connect line 8 to elbow. Install 63AX1106 tee at convenient location in line 5 and reroute line 34 to connect as shown in Figure 1. Recharge air system and check for leaks. Follow steps for initial system inspection.

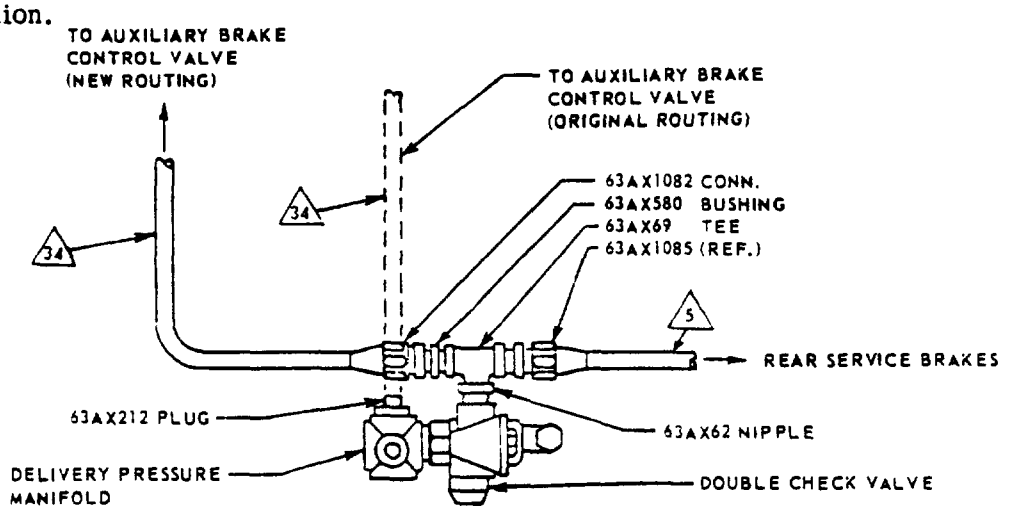

FIGURE 2
AUXILIARY BRAKE CONTROL VALVE PIPING
U & DM MODELS - TYPICAL

Disconnect rear service brake line 5 at double check valve. Remove elbow. Add 63AX62 nipple and 63AX69 tee as shown in Figure 2. Reconnect line 5. At manifold, as shown for original routing, disconnect line 34 connection. Plug port uncovered with 63AX212 plug. Reroute free end of auxiliary brake control valve line 34 to 63AX69 tee and connect. Figure 2 indicates hardware necessary. Recharge air system and check for leaks. Follow steps given for initial system inspection.

(Continued On Sheet #2)

Disconnect rear service brake line 5 at double check valve and stoplight switch. Add 63AX1316 tee at port uncovered. Reconnect line 5 as shown in Figure 3. Disconnect auxiliary brake control valve line 34 at brake valve. Plug uncovered port with 63AX107. Reroute line 34 to connect with 63AX1316 tee as shown. Figure 3 indicates hardware necessary. Recharge system and check for leaks. Follow steps given for initial system inspection.

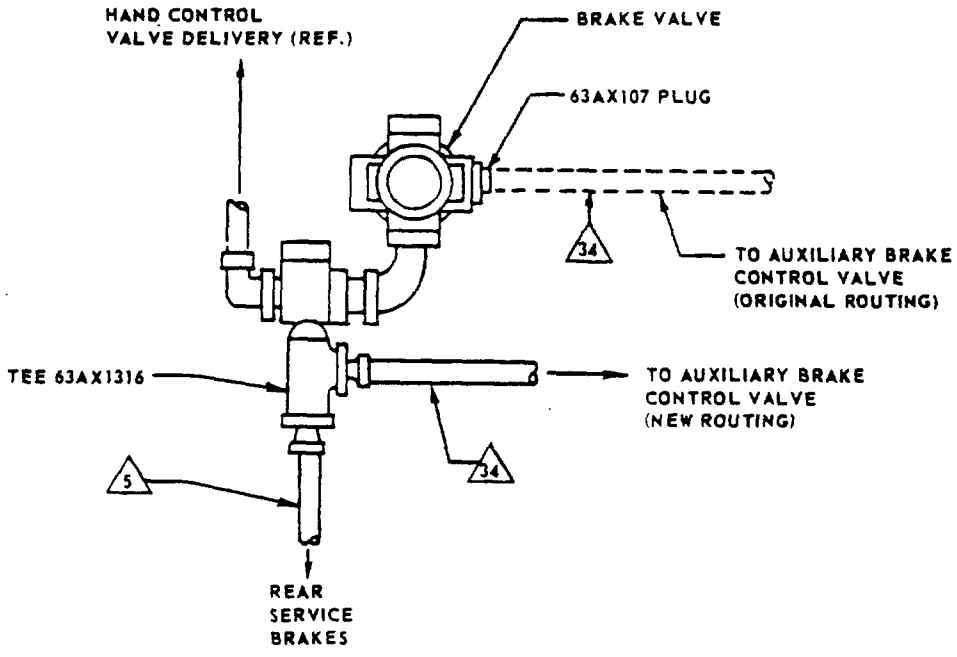

FIGURE 3
AUXILIARY BRAKE CONTROL VALVE PIPING
MB MODELS - TYPICAL

RECOMMENDATION The modification should be made on a customer convenience basis. Re-emphasize to operators that the hand control valve should not be used to hold the brakes applied when the vehicle is being parked unattended.

Parts are available now.

SERVICE BULLETIN

APRIL 7, 1975 **No.** Q553 **under** BRAKES

FOR BRANCHES AND DISTRIBUTORS ONLY. (Supersedes Bulletin dated January 7, 1975)

CHASSIS AFFECTED ALLENTOWN ☑ HAYWARD ☐ OAKVILLE ☑

BRAKE CAM ROTATION CHANGE
(SWS681C Bogie - Eaton 18 x 7 Brakes)

PURPOSE To request that a campaign to change both brake assemblies on the forward bogie axle to prevent possibility of brake "chatter". This condition can damage the brake assembly.

INFORMATION Brake chatter on front bogie axle is eliminated by having the cam rotate in same direction as forward wheel rotation when making a brake application. Up to the present time, brakes on the forward axle have been arranged so that cam rotation is opposite wheel rotation and chatter has been experienced under some conditions. Future production brake assemblies will incorporate the "cam and wheel rotation same" feature and all bogies in service are to be changed over to this configuration.

Brake assemblies that require modification can be recognized by the position of the air chamber. On assemblies requiring changeover, the chamber points down and forward. On assemblies with the desired cam rotation, the chamber points up and forward. See Figure 1.

Basically, the modification consists of interchanging existing spiders and air chamber brackets from side to side and installing new, longer barrel assemblies and camshafts. The longer parts are required to maintain tire clearance when the air chambers are installed in their new position.

All parts required for the changeover are contained in Eaton kit, part number 2719-1001305. The kit contains two barrel assemblies, two camshafts, a grease fitting and attaching hardware. Inspect all other brake assembly parts and replace any found damaged. Pay particular attention to anchor pins, retaining springs and rollers.

Procedure: To be performed on forward bogie axle only.

1. Cage spring brakes, disconnect air lines and remove air chamber from bracket.
2. Remove wheel and drum assemblies.
3. Remove slack adjusters, shoes, rollers and pins keeping shoes and linings on the same side as before.
4. Remove air chamber bracket. Discard bolts but retain washers. Also remove camshaft, camshaft barrel and spider. Retain bolts, nuts and washers. Remove pipe plugs from camshaft barrels and retain.

NOTE

This conversion requires that original left hand spider and air chamber bracket be installed on right side and the right hand spider and bracket on the left side. As these parts are removed, transfer them to the opposite side in preparation for reassembly.

(Continued Over)

CIRCULATION

Service Manager	
Shop Foreman	
Night Foreman	
Night Foreman	
Inspector Leadman	
Inspector Leadman	
Inspector Leadman	
Unit Overhaul Room	
Shop Office	

PRINTED IN USA

5. Mount spider on axle, interchanging left and right hand parts as explained in note.

   Left Side - Install spider so that camshaft bore is to front of axle, approximately at 9:30 o'clock. (8° to 10° above horizontal)

   Right Side - Install spider so that camshaft bore is to front of axle, approximately at 2:30 o'clock. (8° to 10° above horizontal)

6. Mount barrel assembly on the spider. Attach with 1/2-13 x 1-3/4 bolts supplied in kit and the original washers. Tighten bolts to 110 lb. ft. torque.

   Left Side - Use barrel assembly 2719-1001272. See Figure 2.

   Right Side - Use barrel assembly 2719-1001273. See Figure 3.

7. Attach air chamber bracket to barrel assembly using 1/2-13 x 3-1/4 bolts and nuts furnished in kit. Use washer under nut and head of bolt. Use eight existing washers and the eight new ones supplied in kit. Tighten nuts to 110 lb. ft. torque.

   Left Side - Use air chamber bracket with forging number 1000265.

   Right Side - Use air chamber bracket with forging number 1000266.

8. Install new camshaft into barrel assembly. See Figure 4.

   Left Side - Use camshaft 363SM87.

   Right Side - Use camshaft 363SM86.

9. Install slack adjusters, washers and secure with new snap rings.

10. Install grease fitting from kit into one of the barrel assemblies. Pressure lubricate the assembly through this fitting until grease appears next to slack adjuster. Remove fitting and replace with plug from original assembly. Repeat procedure on other side.

11. Complete assembly of brake. Install shoes and drum on same side as originally used on.

12. Connect air lines to air chambers.

    Left Side - Use the lines from right chamber.

    Right Side - Fabricate new lines locally. They must be approximately one foot longer than originals.

13. Adjust both brakes, then uncage spring brake. Check slack adjusters to be sure they do not strike axle housing during a brake application.

RECOMMENDATION This is a campaign. Convert all SWS681C bogies in your area with Eaton brake assemblies incorporating cam rotation opposite wheel rotation on front bogie axle to cam rotation same as wheel rotation. Reimbursement for parts and labor is to be made through normal RWR procedures. Maximum labor time allowed is six hours. All work performed under this program must be completed no later than June 30, 1975. Disposition of removed parts - Ship old camshafts and barrels collect to:

Eaton Corporation
Brake Division
21220 West Eight Mile Road
Southfield, Michigan 48075
Attn: Ray Johnston

(Continued on Sheet #2)

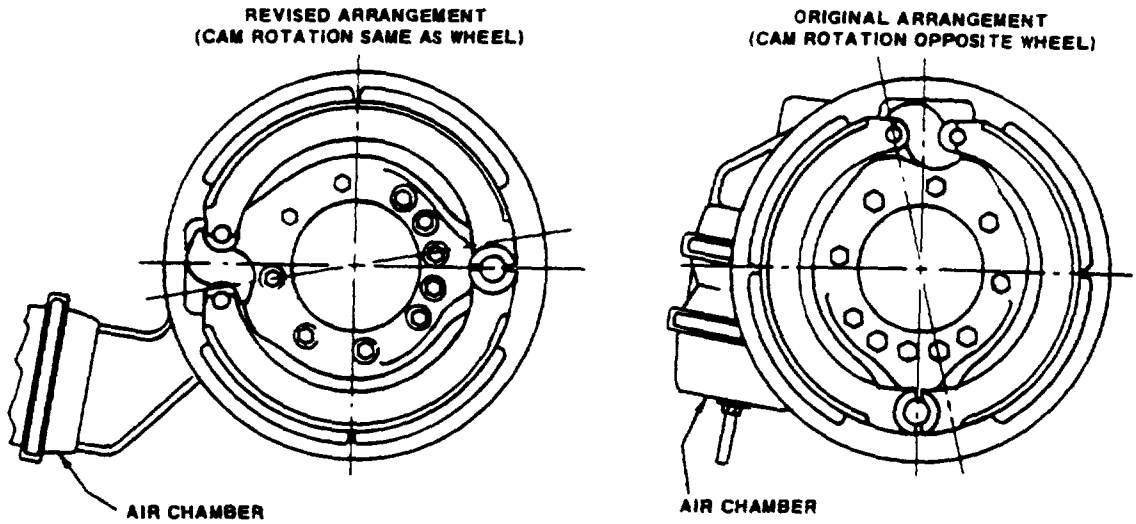

FIGURE 1
SWS681C FORWARD AXLE BRAKE ASSEMBLIES
L.H. SHOWN

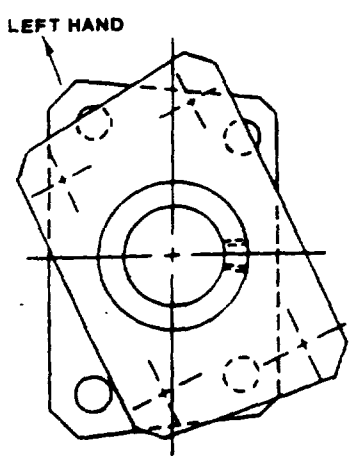

FIGURE 2

Looking into the short end of the camshaft barrel (where the camshaft spline will be), and with the grease fitting hole pointing to 3 o'clock (horizontal), the top of flange closest to the observer will point to the hand of the assembly, as indicated by the arrow.

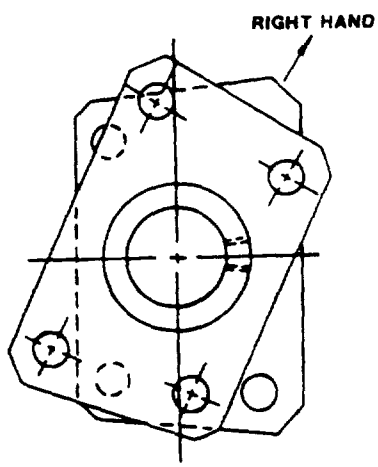

FIGURE 3

Looking into the short end of the camshaft barrel (where the camshaft spline will be), and with the grease fitting hole pointing to 3 o'clock (horizontal), the top of flange closest to the observer will point to the hand of the assembly, as indicated by the arrow.

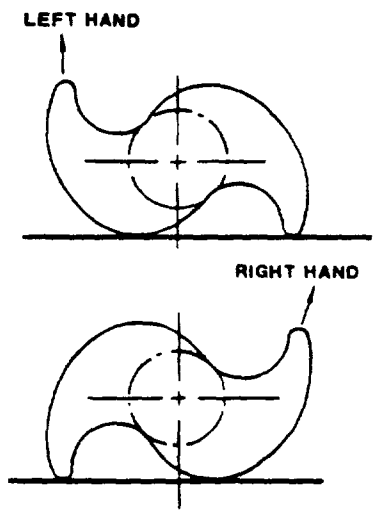

FIGURE 4

Looking into the head of the camshaft in the position shown, the hand of the camshaft is indicated by the arrow.

WHEELS AND AXLES

1. Changing Axles or Springs on Reclass Changeover

Changing axles or springs is possible but once again the GAWR certification must be changed accordingly. For example, if lighter springs are used, the Gross Axle Weight Rating (GAWR) which is governed by lightest component in assembly, will be lowered. Conversely, if heavier springs are used, all other front axle components (brakes, axle beam, knuckle) may require upgrading to allow heavier front axle loadings.

2. Tire or Rim Changeovers on Steering Axle

Tires or rims on the steering axle may be changed to a lower load capacity which lowers the Gross Axle Weight Rating (GAWR) certification accordingly. Tire size, ply rating and rim design all are important factors in determining these capacities. If the operator does not limit front axle loading to the new rating, weight transfer during panic type stops may cause control problems.

WHEELBASE CHANGES

Wheelbase changes can be made within the following guidelines. The wheelbase can be shortened if air line sizes are not reduced or restrictive type fittings are not installed. Wheelbase on a vehicle shall not be reduced below that shown in the current sales Data Book (presently 120 inches). Care must be exercised on straight trucks that the center of gravity wheelbase guidelines outlined in SED letter 585-75 are allowed.

Lengthening the wheelbase from the standard minimum up to 220 inches can be made without adding additional air valving or plumbing. From 220 to 300 inches each axle controller must be fitted with an individual supply line, not smaller than 5/8 inch O. D. tubing. See Figure 3. Any lengthening of the chassis platform by welding additional platform length to the existing frame is not recommended or approved. If the platform is lengthened by welding or other means. it is the sole responsibility of the person or persons doing such work.

NOTE

It is not permissible to splice air line. If longer lines are required it will be necessary to install a complete new line.

CHANGE OF APPLICATION OF STOCK CHASSIS

In the past, it has not been uncommon to modify, say, a tractor chassis (in stock) to be used in a truck application. This will no longer be economically feasible because of changes in brake system components and possible axle and spring changes required to meet weight transfer under the required stopping distance of MVSS 121. These changes required due to difference in weight transfer, may also involve frame modifications.

TRACTOR OR TRAILER STOPLIGHT CIRCUIT OVERLOAD

Caution must be exercised when adding extra stoplights to either tractor or trailer such that the stoplight circuit in either is not overloaded. The anti-wheel lock control that would be mounted on a trailer receives its current source through the stoplight electrical circuit. Should this circuit be overloaded by addition of stoplights on either the tractor or trailer, it could render the anti-wheel lock on the trailer inoperative.

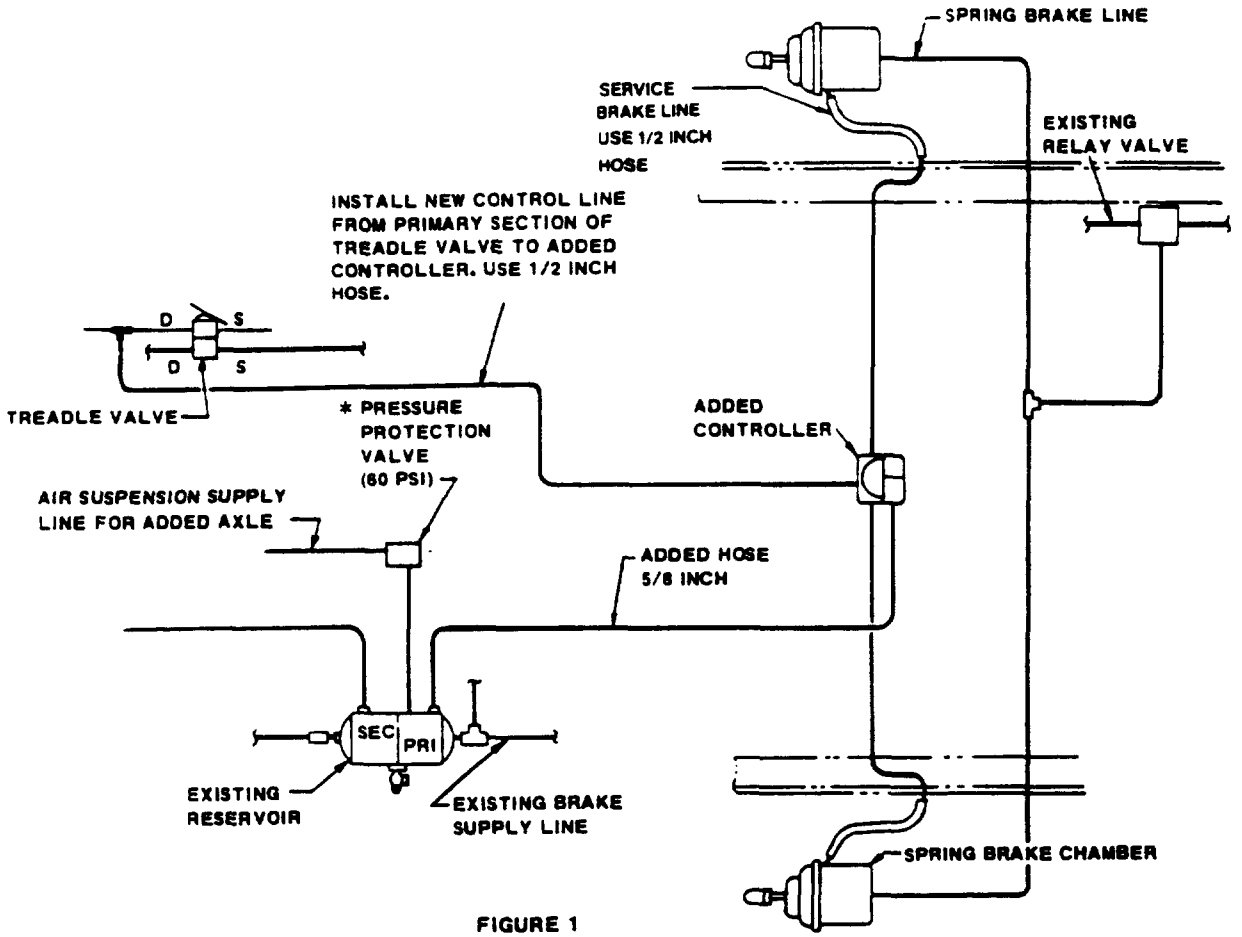

FIGURE 1
PIPING FOR ADDED AXLE ON DM MODELS

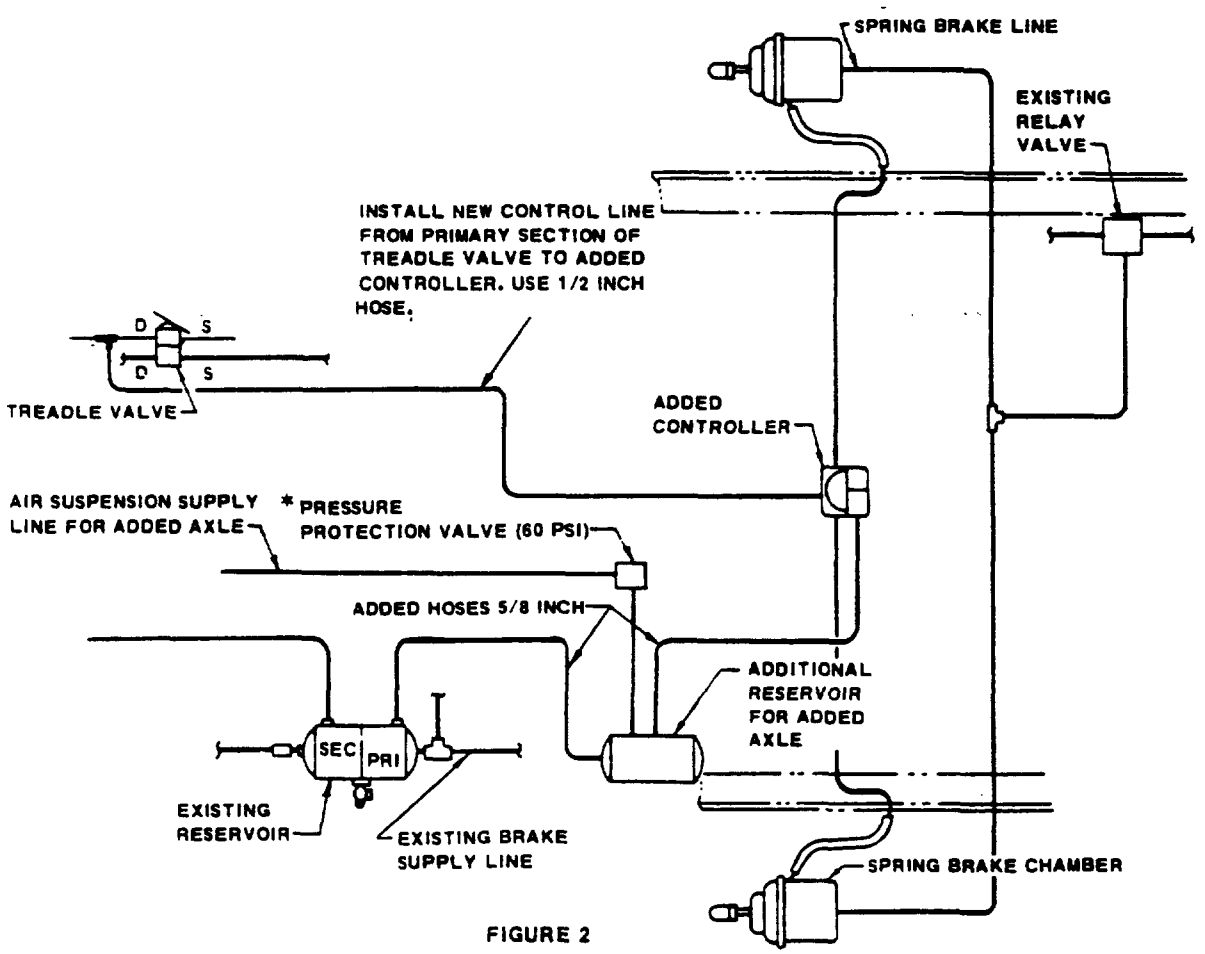

FIGURE 2
PIPING FOR ADDED AXLE
ON ALL EXCEPT DM MODELS

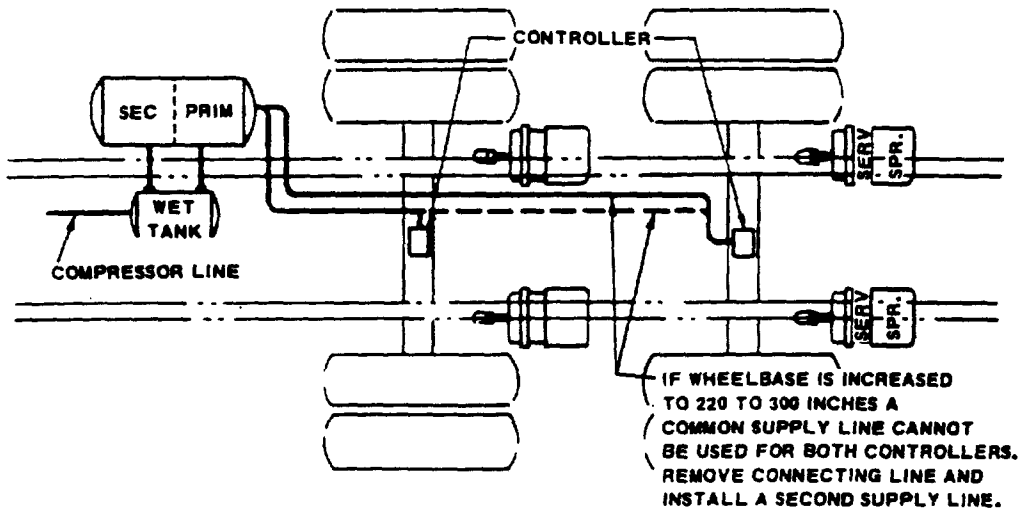

FIGURE 3
ADDING SEPARATE CONTROLLER
SUPPLY LINE ON EXTENDED WHEELBASE

SERVICE BULLETIN

JANUARY 22, 1976 **No.** Q549c **under** BRAKES

FOR BRANCHES AND DISTRIBUTORS ONLY.

CHASSIS AFFECTED ALLENTOWN☑ HAYWARD☑ OAKVILLE☑

BRAKE RETURN SPRING
(All with SW59C and SW68C Series Bogies)

PURPOSE To advise of an alternate return spring available for service replacement.

RECOMMENDATION Install the spring recommended below if short service life is experienced with standard spring. Normal warranty will apply.

INFORMATION The return spring supplied with brake assemblies for subject bogies may not have adequate service life in all operations. Field experience indicates that in these cases the spring shown in following chart will provide longer life.

New Service Part	Description	Replaced Part
58AX55	Brake Return Spring	8235-2258-H-528

NOTE

In Service Bulletin Q549 under BRAKES, mark parts list for SW59C and SW68C (sheet 2, front and back) to show the new spring as replacement for the original spring.

CIRCULATION

Service Manager	
Shop Foreman	
Night Foreman	
Night Foreman	
Inspector Leadman	
Inspector Leadman	
Inspector Leadman	
Unit Overhaul Room	
Shop Office	

PRINTED IN U.S.A.

SERVICE BULLETIN

MARCH 9. 1976 **No.** Q556 **under** BRAKES

FOR BRANCHES AND DISTRIBUTORS ONLY.

CHASSIS AFFECTED ALLENTOWN☐ HAYWARD☑ OAKVILLE☐

BRAKE CHAMBER
Increasing Clearance at Cab Tilt Cylinder
(WL and WS with FAW536C, 537C Front Axles and Cam Brakes)

PURPOSE To inform the field of procedure for eliminating possible interference between front brake chambers and cab tilt cylinder.

RECOMMENDATION Check for subject condition and, if found, reposition brake chamber as instructed in bulletin. Normal warranty will apply.

INFORMATION Additional clearance can be obtained by installing a new brake chamber mounting bracket which rotates the existing chamber 40 degrees to the rear. See illustration

New parts required:

Qty.	Part Number	Description
1	8235-D48-3299-R1552	Brake Chamber Brkt. and Bush. Ass'y., L. H.
1	8235-D48-3299-S1553	Brake Chamber Brkt. and Bush. Ass'y., R. H.

Parts available May.

Procedure:

1. Tilt Cab for accessibility.
2. Remove front brake chambers.
3. Take off "C" clip that retains slack adjusters on camshaft. then remove slack adjusters.
4. Remove four bracket mounting bolts and slide bracket off spider.
5. Install new bracket using existing retaining bolts.
6. Reinstall slack adjusters and brake chambers.
7. Return cab to normal position.

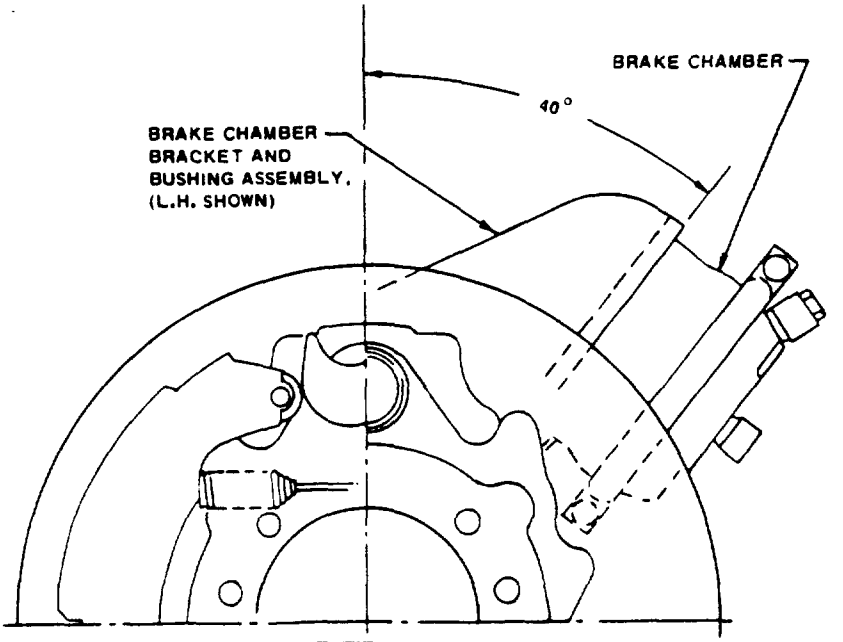

CIRCULATION

Service Manager	
Shop Foreman	
Night Foreman	
Night Foreman	
Inspector Leadman	
Inspector Leadman	
Inspector Leadman	
Unit Overhaul Room	
Shop Office	

March

SERVICE BULLETIN

APRIL 12. 1976 **No.** 0558 **under** BRAKES

FOR BRANCHES AND DISTRIBUTORS ONLY.

CHASSIS AFFECTED ALLENTOWN ☑ HAYWARD ☐ OAKVILLE ☑

ANTI-WHEEL LOCK WIRING
(All with B. F. Goodrich Anti-Wheel Lock System)

PURPOSE To inform the field of a possible cause for the anti-lock warning light remaining on after start up although there is no malfunction in the system.

RECOMMENDATION Revise the B. F. Goodrich anti-lock warning unit wiring as described herein if this condition occurs. Normal warranty will apply.

INFORMATION The brake controller is sensitive to a time delay between energizing of the warning unit's KEY and POWER terminals. In some cases the delay to the POWER terminal. caused by the time required for the accessory relay to close, is long enough to be interpreted as a power failure by the controller. When this occurs, the anti-lock warning light will not go out even though the system is functioning normally.

To prevent this condition, the warning unit wiring has been changed at the factory to insure simultaneous energization of these terminals. The modification, shown in following illustration. consists of removing existing wire from KEY terminal and connecting KEY and POWER terminals with a bus bar. For field modifications a jumper wire can be used in place of the bus bar.

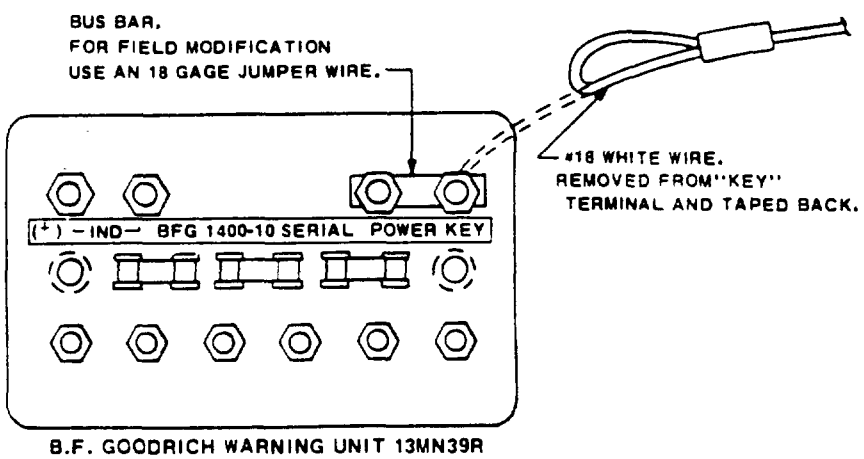

B.F. GOODRICH WARNING UNIT 13MN39R

CAUTION

Be sure to remove the wire from the KEY terminal. not POWER terminal. This is important because the KEY terminal wire is not heavy enough to carry combined load of both circuits.

CIRCULATION

Service Manager	
Shop Foreman	
Night Foreman	
Night Foreman	
Inspector Leadman	
Inspector Leadman	
Inspector Leadman	
Unit Overhaul Room	
Shop Office	

Mack

SERVICE NOTE

The original controller, 3355-1800-2 is terminated and future service requirements will be met with an improved controller 7MN31R. This controller incorporates revised circuitry that prevents possibility of the false failure indication described herein. An additional improvement involves use of different sizes for the power/warning and wheel sensor connectors. This feature eliminates possibility of making an incorrect connection at these points. An adapter harness 41MR3516-P1 is available to permit connecting the improved controller to old style leads Valve and controller assemblies incorporating controller 7MN31R are part number 5MN35R. replacing 5MN33R

Service installation of controller 7MN31R (or assembly 5MN35R) can be accomplished as follows:

1. It is permissible to intermix current and non-current controllers on a single chassis; however if at least one controller is of non-current type the warning unit must be wired as described previously.

2. When all controllers on a vehicle are of improved type 7MN31R, the revised wiring shown in the illustration is not required. Vehicles that are wired in this manner should be changed back to standard wiring if, at any time, all controllers are changed to 7MN31R. This is accomplished by removing the bus bar (or jumper wire) from warning unit and reconnecting the KEY terminal wire.

SERVICE BULLETIN

JUNE 15, 1976 **No.** Q554 **under** BRAKES

FOR BRANCHES AND DISTRIBUTORS ONLY. (Supersedes Bulletin dated JANUARY 8, 1976)

CHASSIS AFFECTED ALLENTOWN☑ HAYWARD☑ OAKVILLE☑

MVSS 121 PRECAUTIONS
(All Vehicles So Equipped)

PURPOSE To inform branch and distributor personnel of certain precautions regarding chassis modifications on MVSS 121-equipped vehicles that could adversely affect braking performance and require recertification to comply with MVSS 121.

RECOMMENDATION It is strongly recommended that vehicles subject to MVSS 121 requirements not be modified in any way that would jeopardize their certification. If for any reason, such modification is considered necessary, be sure to observe the guide lines presented in the preceding discussion. However, bear in mind that this is only a guide; the party making the installation is ultimately responsible for the vehicles compliance with all regulations.

The following SED letters provide additional details on MVSS 121 requirements:

577-75 FMVSS Equipped Chassis
555-74 MVSS 121 Air Brake Standard
520-73 Braking Requirements
585-75 Center of Gravity vs. Wheelbase
550-74 Elimination of Short Wheelbase

INFORMATION If any modifications affecting braking performance are performed, it will be the responsibility of the facility making the modification to recertify that the vehicle meets all requirements of FMVSS 121. These requirements cover (but are not limited to) the following:

(1) Air compressor pressure build-up time
(2) Air reservoir volume
(3) Service brake stopping distance
(4) Brake actuation time
(5) Brake release time
(6) Parking brake grade holding
(7) Emergency brake stopping distance

BRAKE SYSTEM

1. Relocation of Chassis Air Reservoirs

This has often been done in the past to provide clearance for installation of bodies and other special equipment. This is no longer acceptable if the relocation requires changing length of any hoses or changing any hose connecting fittings. For example, if relocation would require a change from a straight fitting to an elbow fitting, then this could adversely affect brake application times or air compressor build-up time and would not be acceptable.

Minor air reservoir relocation that does not require changing line diameter, lengthening lines or addition of restrictive fittings would be acceptable.

(Continued Over)

CIRCULATION

Service Manager	
Shop Foreman	
Night Foreman	
Night Foreman	
Inspector Leadman	
Inspector Leadman	
Inspector Leadman	
Unit Overhaul Room	
Shop Office	

PRINTED IN U.S.A.

Mack

2. Removing Front Brakes

Our tests disclose that the front brakes are required to meet the minimum stopping distance requirements of MVSS 121.

3. Reclass Changeover of Brake System Components

This has been done in the past in certain instances to satisfy customer requirements for a particular brand name brake system component. This practice will no longer be permitted, unless the installer making the changeover is prepared to recertify that the chassis so modified meets all MVSS 121 requirements. This necessity comes as a result that the chassis, as was originally certified by Mack Trucks, was so certified based on the performance of entire braking system being considered on a system basis. To change a component, even though that component may be used in an MVSS 121 brake system for some other model or application, could result in the affected brake system failing to meet requirements. Alcohol evaporators and after coolers may be field installed.

4. Local Installation of Tag or Pusher Axles

This has often been done in the past (prior to MVSS 121) on new chassis to satisfy customer request. As a result of the recertification requirement in MVSS 121, the installation of either a tag or pusher axle will require the installer to recertify that the chassis meets all MVSS 121 requirements. It is suggested that both distributors and branches refrain from making any such installation at this time as a result of the expense that could be incurred in the event that the recertification was challenged by D.O.T. This would result in the installer, at his expense, having the vehicle tested to assure compliance.

Adding the third axle requires installation of an additional reservoir and in most cases a larger air compressor. Based on use of type 30 brake chambers, minimum additional reservoir size is 2160 cubic inches. Vehicles equipped with a TU-FLO 501 air compressor will require a TU-FLO 600 compressor to provide adequate capacity. We highly recommend, although not specifically required by MVSS 121, that adequate spring brake chambers be installed on the third axle to ensure the chassis will meet parking and emergency stopping requirements.

It is also necessary to add anti-wheel lock equipment to a third axle under most conditions.

4-Wheel Truck - An additional axle, either tag or pusher, liftable or non-liftable must have anti-lock device.

6-Wheel Truck A non-liftable tag axle must be equipped with anti-lock.. To meet the performance requirements of MVSS121 we recommend that any additional axle installed whether liftable or non-liftable, in the tag or pusher position be equipped with anti-lock.

Another consideration when adding a third axle is weight transfer. The additional axle and consequent higher gross loads may increase forward weight transfer. This condition can decrease braking ability and possibly damage front axle components. Additional information regarding weight transfer is given in Sales Engineering letter 585-75.

The accompanying diagrams of a third axle piping arrangement is offered as a guide for cases where it has been decided to make such an installation. See Figures 1 and 2. However, use of these arrangements should not be construed as a guarantee that a vehicle so modified will meet any or all MVSS 121 requirements.

(Continued on Sheet #2)

SERVICE BULLETIN

JULY 16, 1976 **No.** Q555 **under** BRAKES

FOR BRANCHES AND DISTRIBUTORS ONLY.

(Supersedes Bulletin dated OCTOBER 27, 1975)

CHASSIS AFFECTED ALLENTOWN ☑ HAYWARD ☐ OAKVILLE ☑

BRAKE CONTROLLER AND MASTER CYLINDER RESERVOIR

Component Relocation

(R, RD. DM and U Models)

PURPOSE To outline procedure for relocating subject components if required to permit installation of special bodies, improve accessibility etc.

RECOMMENDATION If it is necessary to relocate brake master cylinder or front axle controller, follow procedure outlined in bulletin.

INFORMATION Early production of MVSS121 equipped vehicles had the front axle brake controller mounted on the engine front support crossmember. It has since been relocated to a frame crossmember to improve engine accessibility, line routing and brake operation. The brake reservoir of DM400, 600 all R and RD vehicles equipped with disc brakes has been relocated to engine side of dash panel to eliminate interference with body components.

Parts required:

Brake Reservoir Mounting Parts

Chassis	Qty.	Part Number	Description
DM400 DM600	1	24QE3197	Bracket, Reservoir Mounting
	1	*42QEA40400-P122	Flex Hose Assembly
	2	1AX111	Bolt, 3/8-24 X 3/4
	2	20AX3	Nut, 3/8-24 Hex
	2	36AX3	Lockwasher
R, RD w/ Fiber-glass Hood (W/O Air Susp.Cab.)	1	24QE3198	Bracket, Reservoir Mounting
	1	*42QEA40400-P120	Flex Hose Assembly
	1	83AX629	Clamp, Hose
	1	239AX331	Screw, #10-16 X 1/2, Self drilling
R, RD w/ Fiberglass Hood and Air Susp. Cab.	1	24QE2397	Bracket, Reservoir Mounting
	1	*42QEA40400-P120	Flex Hose Assembly
	1	83AX629	Clamp, Hose
	1	239AX331	Screw, #10-16 X 1/2, Self drilling
	2	4AX22	Bolt, 1/4-20 X 1
	2	36AX1	Lockwasher, 1/4
	2	#1AX445	Bolt, 1/4-28 X 2-5/8
R, RD w/ Sheetmetal Hood	1	24QE2397	Bracket, Reservoir Mounting
	1	*42QEA40400-P120	Flex Hose Assembly
	1	83AX629	Clamp, Hose
	2	4AX22	Bolt, 1/4-20 X 1
	2	36AX1	Lockwasher
	2	#1AX445	Bolt, 1/4-28 X 2-5/8

* Make from 973AX130FT25 hose and (2) 63AX1720 fittings

\# Purchase locally.

(Continued Over)

CIRCULATION

Service Manager	
Shop Foreman	
Night Foreman	
Night Foreman	
Inspector Leadman	
Inspector Leadman	
Inspector Leadman	
Unit Over-haul Room	
Shop Office	

Controller Mounting Parts

Chassis	Qty.	Part Number	Description
	AR	101AX126RF50	Hose (1/2 O. D.)
	AR	101AX127RF50	Hose (5/8 O. D.)
All w/	1	26QB2241	Controller Mounting Bracket
Eaton	1	26QB2305	Ratio Valve Mounting Bracket
Controller	2	1AX63	Bolt, 5/16-24 X 2
& Channel	1	1AX6	Bolt, 5/16-24 X 1-3/4
Type cross-	2	1AX114	Bolt, 5/16-24 x 1
member	5	20AX2	Nut
	5	36AX22	Lockwasher
	2	37AX68	Flatwasher
	3	35AX1027	External Tooth Lockwasher
	AR		Hose
with	1	26QB2239	Controller Mounting Bracket
Eaton	2	1AX60	Bolt, 1/2-20 x 1-1/2
Controller	3	1AX6	Bolt, 5/16-24 x 2
& I-beam	5	20AX5	Nut
Cross-	2	36AX5	Lockwasher
member	3	36AX22	Lockwasher
	3	35AX1027	External Tooth Lockwasher
with	3	1AX13	Bolt, 3/8-24 x 1-1/2
Goodrich	3	20AX3	Nut
Controller	3	36AX3	Lockwasher
	3	35AX916	External Tooth Lockwasher

Relocating Brake Reservoir

Refer to following illustrations for the reservoir location and mounting instructions.

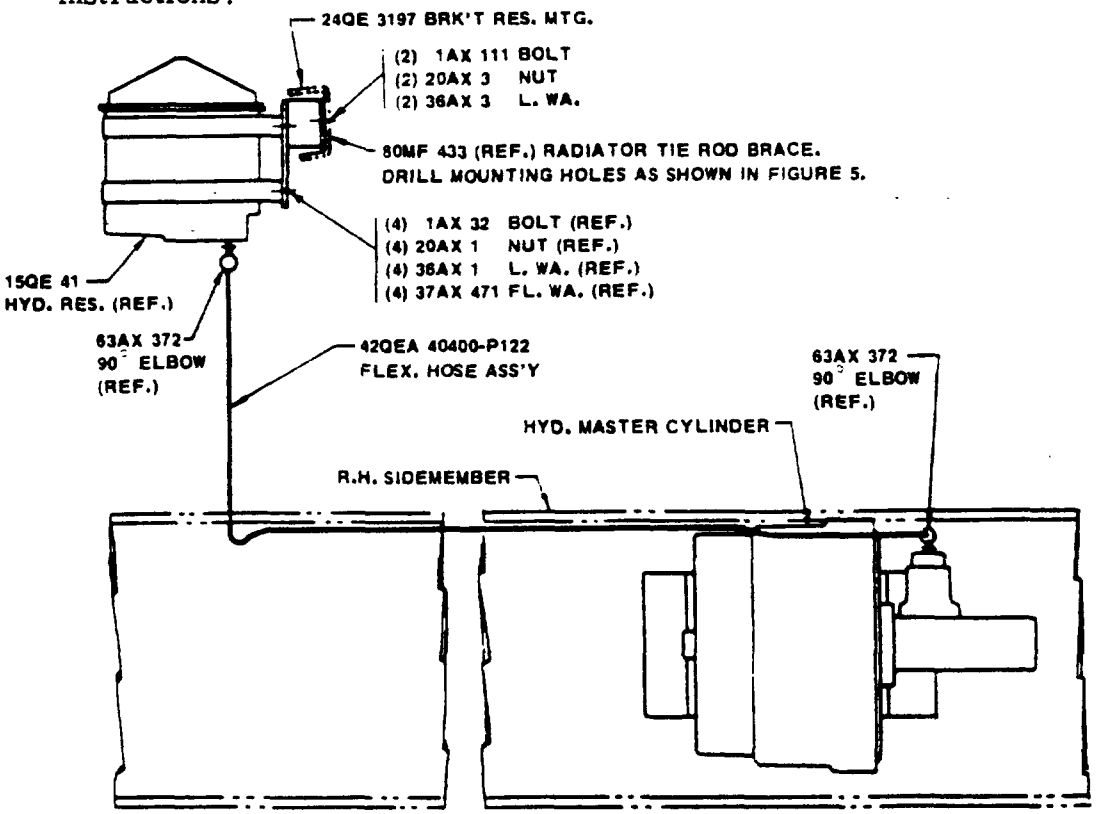

FIGURE 1
BRAKE RESERVOIR MOUNTING, DM

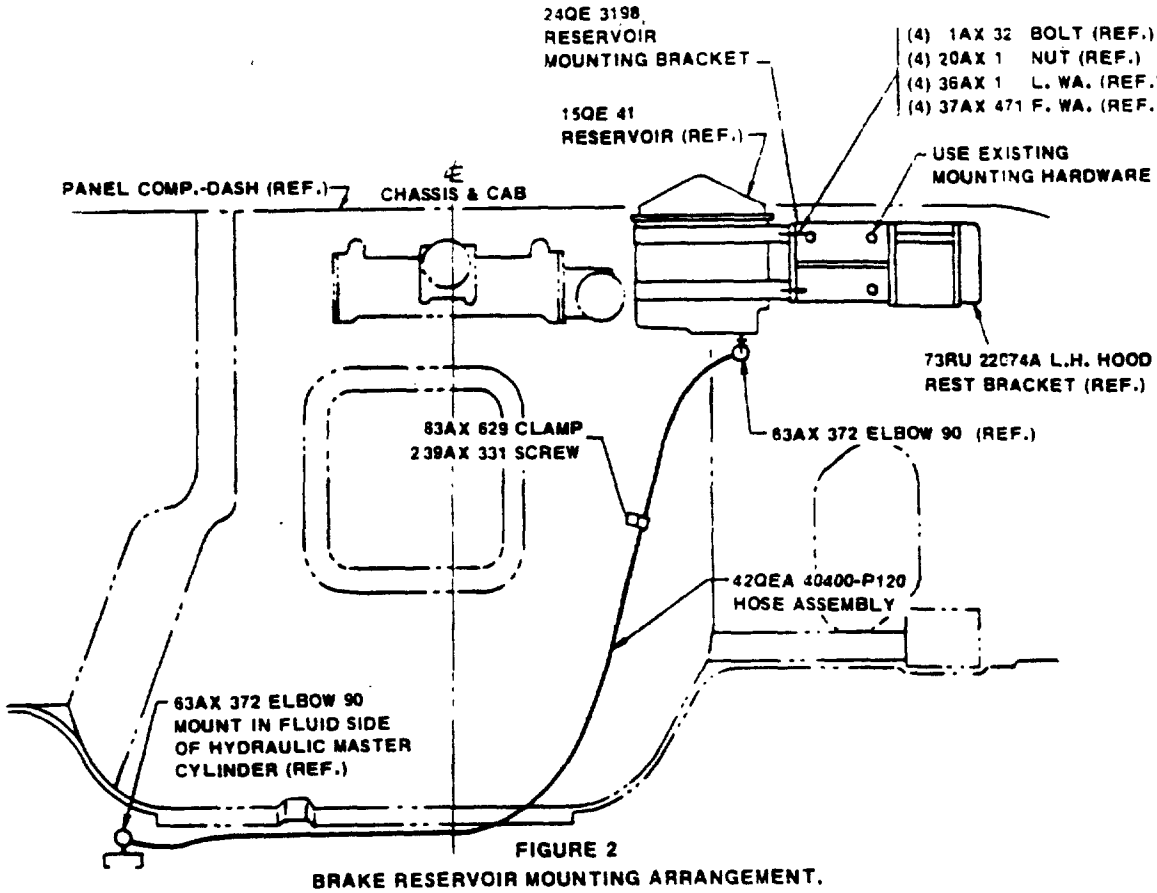

FIGURE 2
BRAKE RESERVOIR MOUNTING ARRANGEMENT,
R AND RD SERIES WITH FIBERGLASS HOOD
AND STANDARD CAB MOUNTING

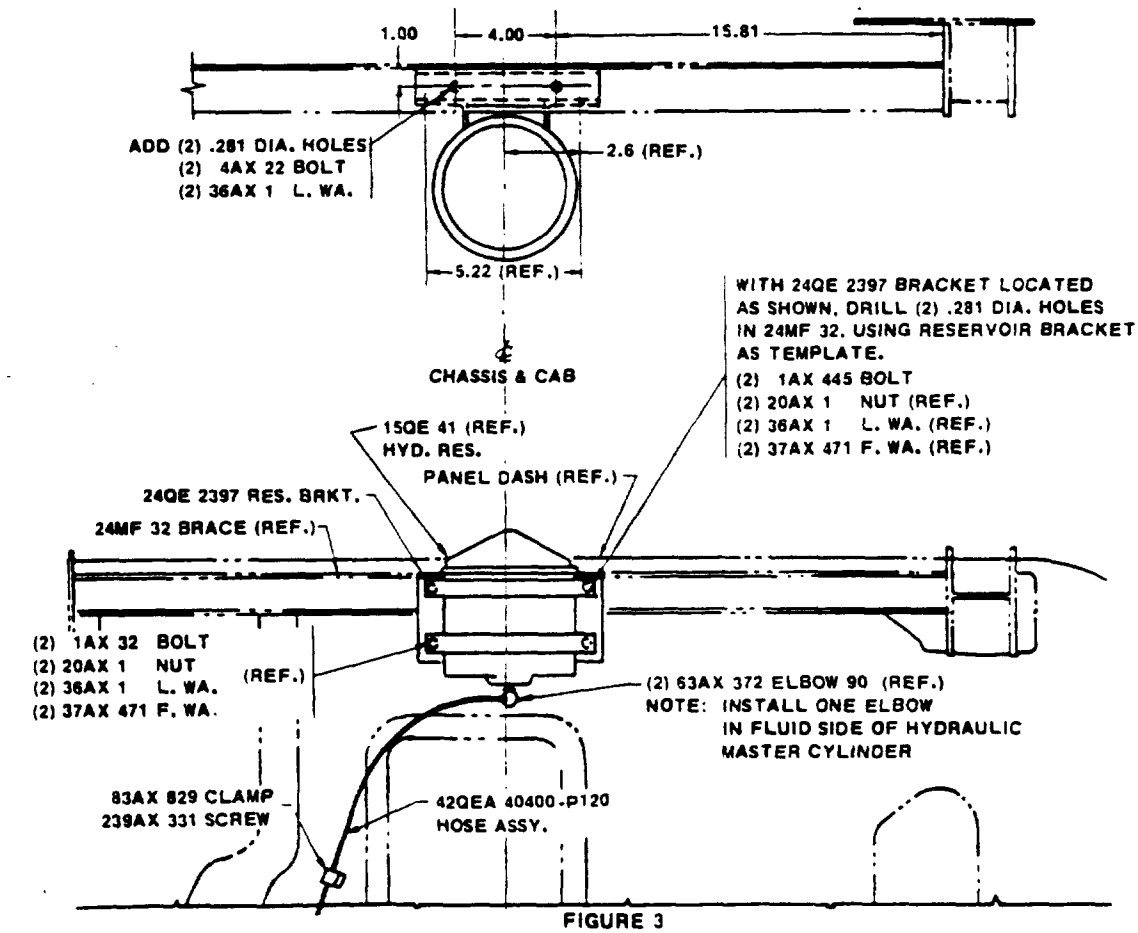

FIGURE 3
BRAKE RESERVOIR MOUNTING ARRANGEMENT,
R AND RD SERIES WITH FIBERGLASS HOOD
AND AIR SUSPENDED CAB

(Continued Over)

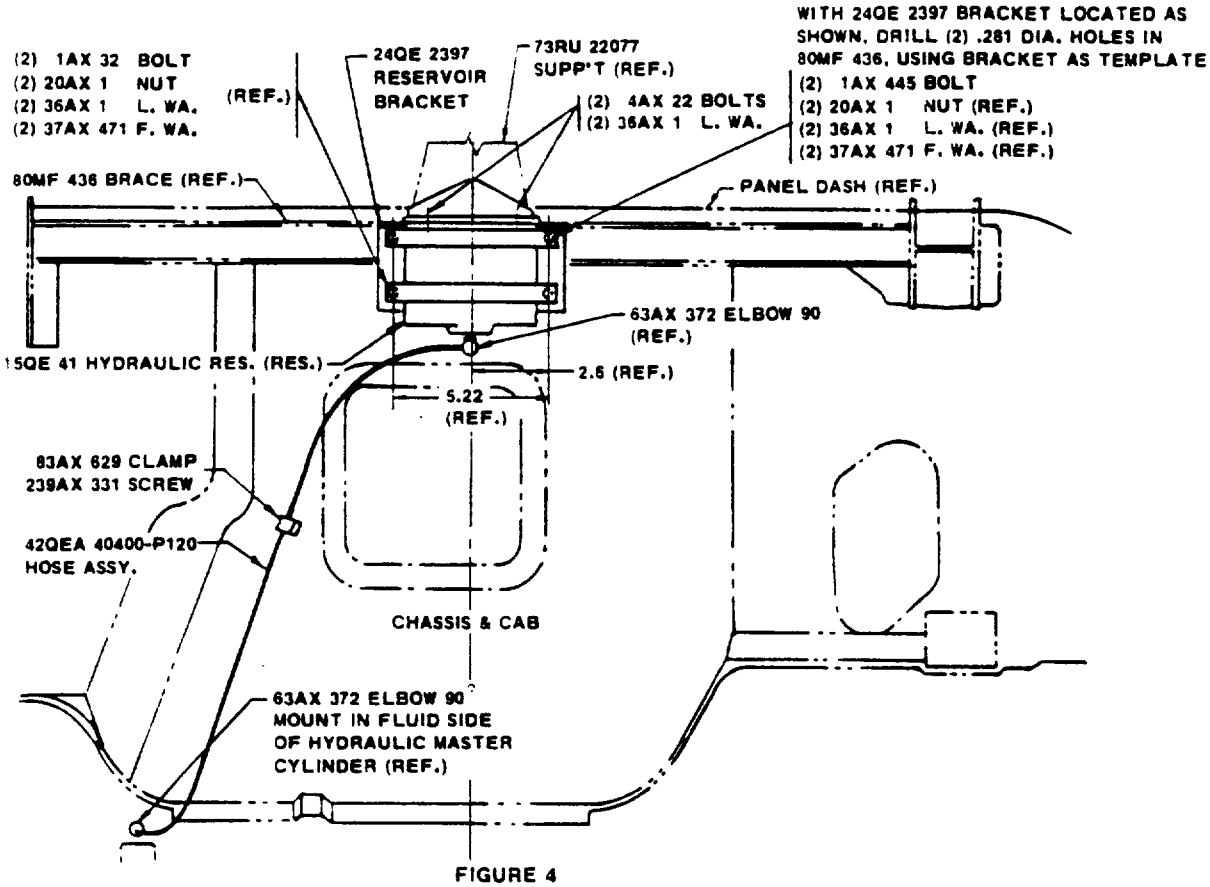

FIGURE 4
BRAKE RESERVOIR MOUNTING ARRANGEMENT, R AND RD SERIES WITH SHEET METAL FRONT END

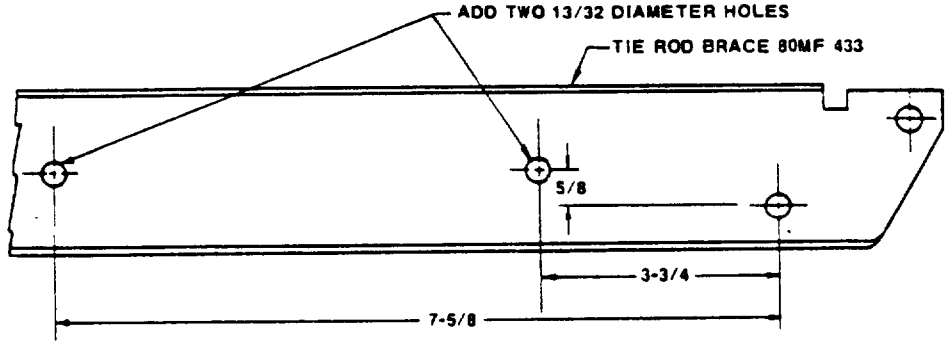

FIGURE 5
BRAKE RESERVOIR MOUNTING HOLES

Master Cylinder

CAUTION

If the master cylinder must be relocated, maintain the hydraulic fluid supply port in the top or upright position.

Hydraulic System Bleeding

Whenever brake system hydraulic components have been relocated, it is necessary to bleed the system of air. First bleed the master cylinder at the bleed vent then bleed each front wheel caliper. Use a pressure bleeder or bleed the system manually. After bleeding replenish the brake fluid in the hydraulic reservoir.

Relocating Front Axle Controller

Eaton Controller - Mount on the frame crossmember located immediately behind cab. Locate approximately as shown in Figure 6. Be sure controller clears frame, crossmember and any adjacent chassis equipment before drilling mounting holes. Shift controller as necessary to provide adequate clearance. Note that two mounting arrangements are used, depending on type of crossmember. See Figures 6 and 7.

NOTE

To conform with current production, the ratio valve is relocated along with the controller.

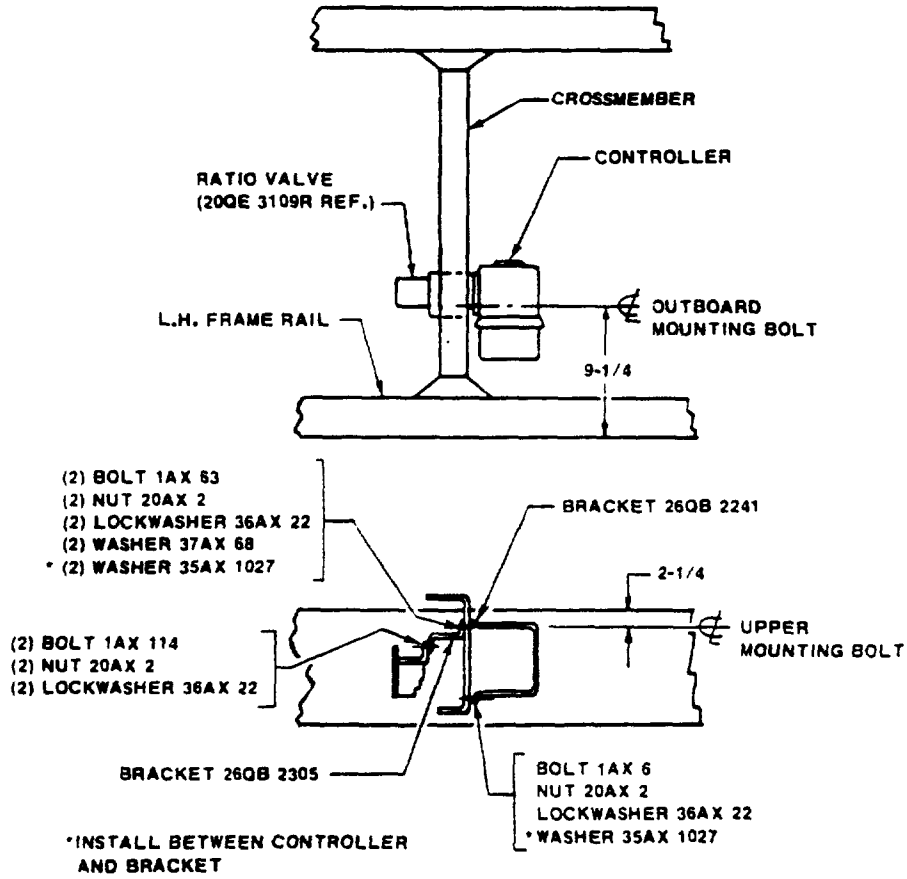

FIGURE 6
MOUNTING EATON CONTROLLER ON
CHANNEL TYPE CROSSMEMBER

(Continued Over)

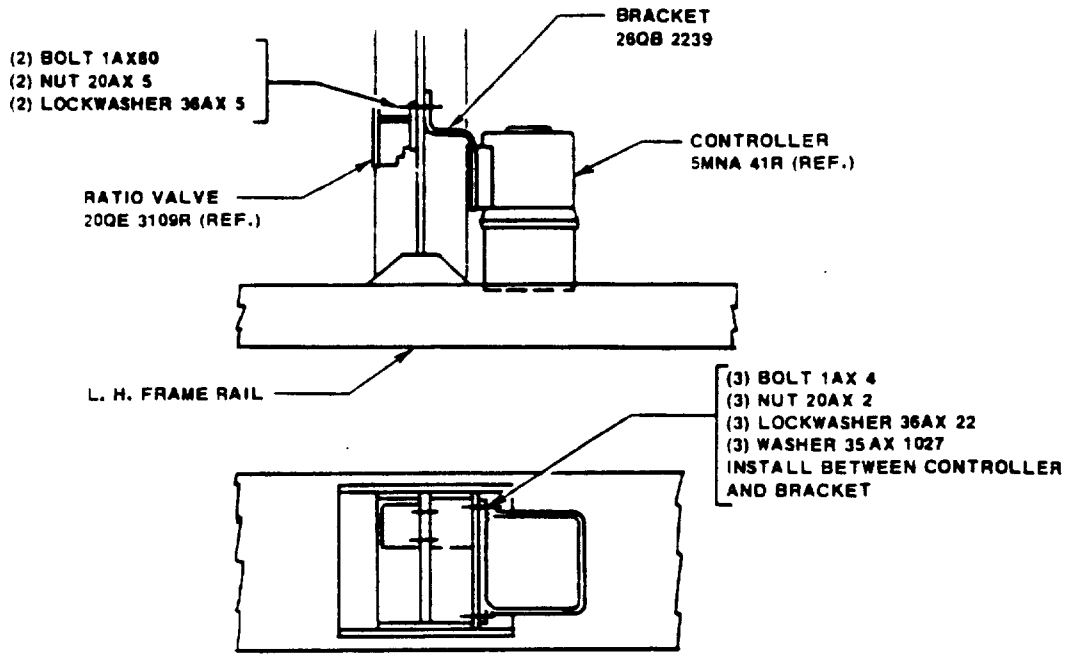

FIGURE 7
INSTALLING EATON CONTROLLER ON
I-BEAM CROSSMEMBER

Goodrich Controller - Mount on inside of left hand frame rail, close to the cab crossmember as shown in Figure 8. Air and electrical lines routed along the frame rail may have to be raised or lowered in this area to clear the controller.

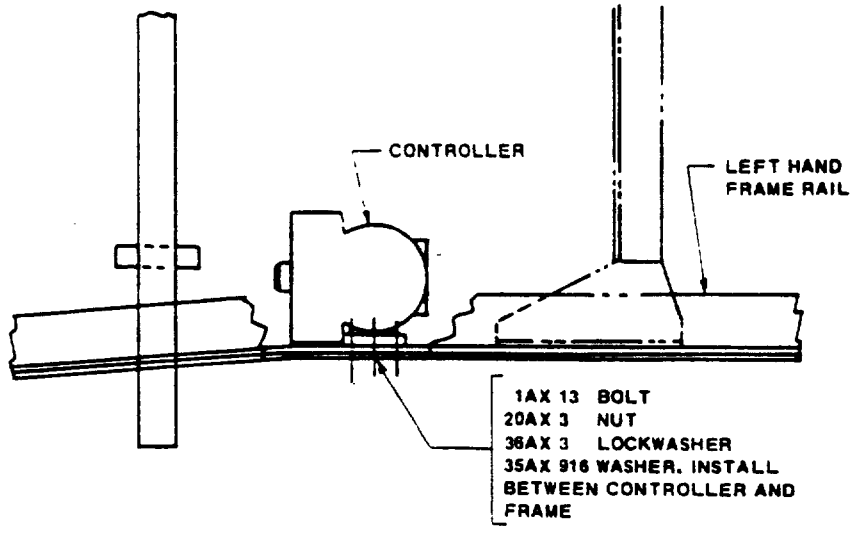

FIGURE 8
MOUNTING GOODRICH CONTROLLER

Repipe the relocated components as shown in Figure 9. Use same size air lines as original installation and be sure to use non-restrictive fittings. If possible, reuse originai fittings. Do not splice air lines. Use a complete new hose if a longer line is required.

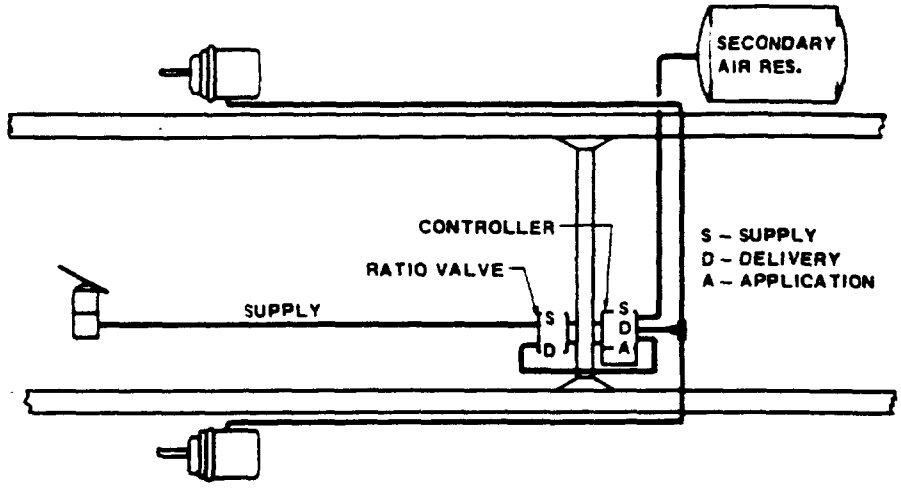

FIGURE 9
PIPING CONTROLLER AND RATIO VALVE

SERVICE BULLETIN

JULY 29, 1976 **No.** Q559 **under** BRAKES

FOR BRANCHES AND DISTRIBUTORS ONLY.

CHASSIS AFFECTED ALLENTOWN☐ HAYWARD☑ OAKVILLE☐

FRONT BRAKE CHAMBER

Increasing Clearance with Power Steering Gear

(WL and WS with FAW536W, FA537W, FF931W Front Axle and Wedge Brakes)

PURPOSE To provide procedure for eliminating possible interference between air inlet fitting and power steering gear.

RECOMMENDATION Revise brake chamber on all chassis equipped with power steering gear if originally built with non-current inlet port orientation. Normal warranty will apply.

INFORMATION The inlet fitting on forward, left hand air brake chamber can interfere with the power steering gear if it is not correctly positioned. Vehicles with this condition can be rectified by rotating the chamber cover to properly orient the fitting.

To reposition the cover, disconnect air line from chamber. Loosen chamber clamp and rotate cover to position inlet port as shown in illustration. Tighten clamp.

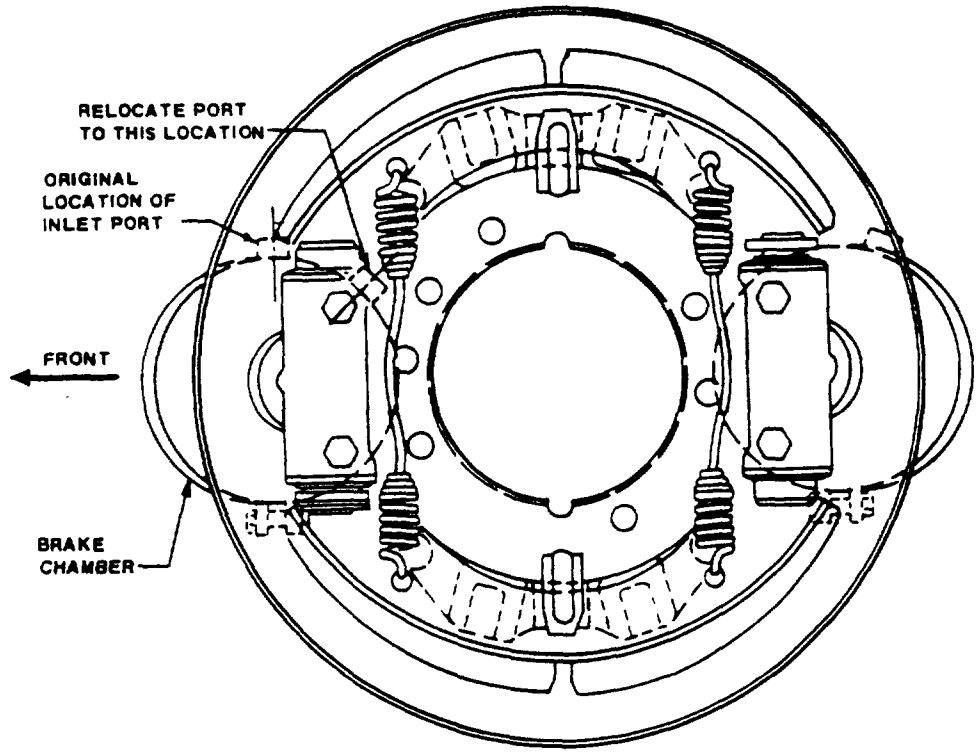

The air line connecting front and rear chambers will have to be shortened to suit the new port location of front chamber. Reposition air line fittings to provide best routing with the shorter hose.

CIRCULATION

Service Manager	
Shop Foreman	
Night Foreman	
Night Foreman	
Inspector Leadman	
Inspector Leadman	
Inspector Leadman	
Unit Overhaul Room	
Shop Office	

PRINTED IN U.S.A.

SERVICE BULLETIN

AUGUST 27, 1976 **No.** Q560 **under** BRAKES

FOR BRANCHES AND DISTRIBUTORS ONLY.

CHASSIS AFFECTED ALLENTOWN☐ HAYWARD☑ OAKVILLE☐

TRACTOR PROTECTION VALVE MOUNTING

(Mack Western Models WL and WS)

PURPOSE To inform the field of an improved mounting arrangement for subject valve.

RECOMMENDATION Install the new reinforcement on all vehicles not so equipped. Normal warranty will apply.

INFORMATION The improved mounting arrangement consists of a reinforcement plate installed between the tractor protection valve and cab floor.

Parts required:

Quantity	Part Number	Description
1	50QW29310	Reinforcement Plate
4	27AX370	Rivet

To install the plate, remove tractor protection valve and drill four mounting holes in cab floor using the reinforcement plate as a template. Position template by using 5/16-24 bolts installed in tractor protection valve mounting nut-serts. Refer to illustration for hole layout and size. Install reinforcement plate using rivets shown in parts list. Reinstall tractor protection valve using existing hardware.

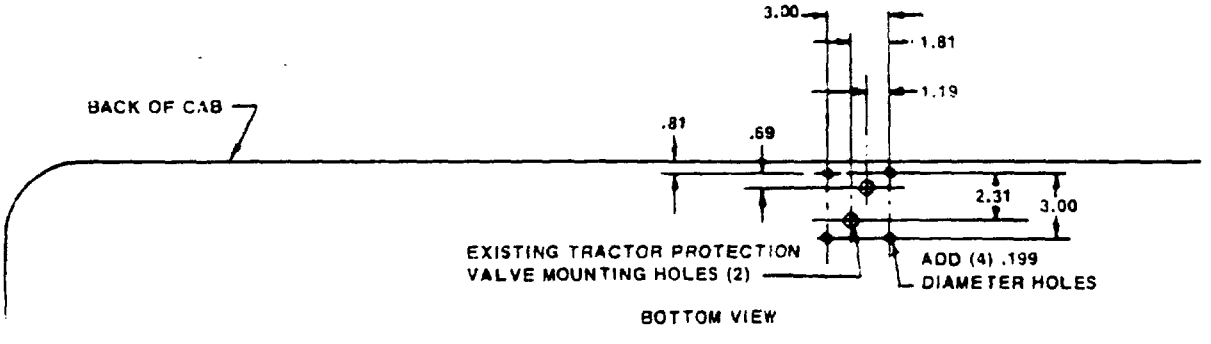

NOTE

The nut-sert flanges are larger than the 1/2 inch diameter mounting bolt holes in the reinforcement plate and will prevent the plate from seating flush against cab floor. Do not enlarge holes in plate to provide clearance. The plate must support the nut-serts.

CIRCULATION	
Service Manager	
Shop Foreman	
Night Foreman	
Night Foreman	
Inspector Leadman	
Inspector Leadman	
Inspector Leadman	
Unit Overhaul Room	
Shop Office	

SERVICE BULLETIN

FEBRUARY 3, 1978 T **No.** Q561 **under** BRAKES

FOR BRANCHES AND DISTRIBUTORS ONLY.

CHASSIS AFFECTED ALLENTOWN ☑ HAYWARD ☑ OAKVILLE ☑

DOUBLE CHECK VALVE AND STOP LIGHT SWITCH
(All Highway Models)

PURPOSE To announce availablility of a separate double check valve and stop light switch to replace the combination valve and switch.

RECOMMENDATION Install the new check valve and stop light switch arrangement if the combination valve and switch requires replacement.

INFORMATION The separate valve and switch arrangement provides easier servicing of the stop light switch. The switch screws into the check valve body and can be replaced without disturbing any air lines. A separate valve and switch can be used to service the combination unit.

Parts required:

Qty.	New Part	Description	Replaces
1	20QE2199R	Double Check Valve	20QE3120R
1	* 1MRA2325R	Stoplight Switch	----------

* Includes boot 8MY266

PRINTED IN U.S.A.

CIRCULATION

Service Manager	
Shop Foreman	
Night Foreman	
Night Foreman	
Inspector Leadman	
Inspector Leadman	
Inspector Leadman	
Unit Overhaul Room	
Shop Office	

SERVICE BULLETIN

MARCH 16, 1978 T **No.** Q564 **under** BRAKES

FOR BRANCHES AND DISTRIBUTORS ONLY.

CHASSIS AFFECTED ALLENTOWN☑ HAYWARD☐ OAKVILLE☑

BRAKE ASSEMBLY DUST SHIELD
(DM, F, MB, R, RD, U and R Fire Apparatus With
FAW536C, 537C Front Axles and 16 1 2 x 5 Cam Brakes)

PURPOSE To announce availability of a one-piece dust shield.

RECOMMENDATION Install the one-piece shield if water or dirt entering the brake is a problem.

INFORMATION Air brake assemblies 1QDA4225R(R.H.) and 1QDA4226R (.L.H.), formerly supplied with two-piece dust shields, now have one-piece shields. The new shield provides better protection against entry of water than the previous part. Water in the brake assembly can cause erratic brake performance, such as pulling to one side.

One-piece shield, part number 8235-3236-K-2065, can be used as a replacement for the two-piece shield, if desired.

PRINTED IN U.S.A.

CIRCULATION

Service Manager
Shop Foreman
Night Foreman
Right Foreman
Inspector Leadman
Inspector Leadman
Inspector Leadman
Unit Overhaul Room
Shop Office

SERVICE BULLETIN

JULY 20, 1978 **No.** Q566 **under** BRAKES

FOR BRANCHES AND DISTRIBUTORS ONLY.

CHASSIS AFFECTED ALLENTOWN☑ HAYWARD☑ OAKVILLE☑

AUTOMATIC SLACK ADJUSTER
(RAS512C and RAD529C Rear Axles on Chassis
Equipped with Disc Brakes)

PURPOSE To provide instructions for installing automatic slack adjusters on rear wheel brake assemblies.

RECOMMENDATION Install automatic slack adjusters if service life of disc brake lining is unsatisfactory.

INFORMATION Rapid wear of disc type front brakes has been traced, in many cases, to incorrect adjustment of the rear wheel brake slack adjusters. This condition occurs because the disc brakes, being self-adjusting, always provide braking action, whereas incorrectly adjusted rear wheel brakes do not provide their normal share of the braking action under light braking conditions. Installation of automatic slack adjusters will maintain the rear brakes at correct operating clearance at all times thereby equalizing wear on front and rear brakes.

NOTE

In addition to the slack adjusters, it is recommended to replace the front wheel brake ratio valve with metering valve 20QE2191R. Refer to Service Bulletin Q95 under BRAKES for details.

Parts required:

Qty.	Part Number	Description
2	25QDA335-P8	Slack Adjuster
2	21QX1188	Slack Adjuster Retainer
4	48RU1899	Retainer Clamp
2	7AX263	Setscrew
2	1AX147	Bolt, 1/4-28 x 1-1/4
4	1AX69	Bolt, 1/4-28 x 1-5/8
6	20AX1	Nut, 1/4 - 28
6	36AX1	Lockwasher
2	36AX4	Lockwasher

CIRCULATION

Service Manager	
Shop Foreman	
Night Foreman	
Night Foreman	
Inspector Leadman	
Inspector Leadman	
Inspector Leadman	
Unit Overhaul Room	
Shop Office	

(Continued Over)

Procedure - See illustration.

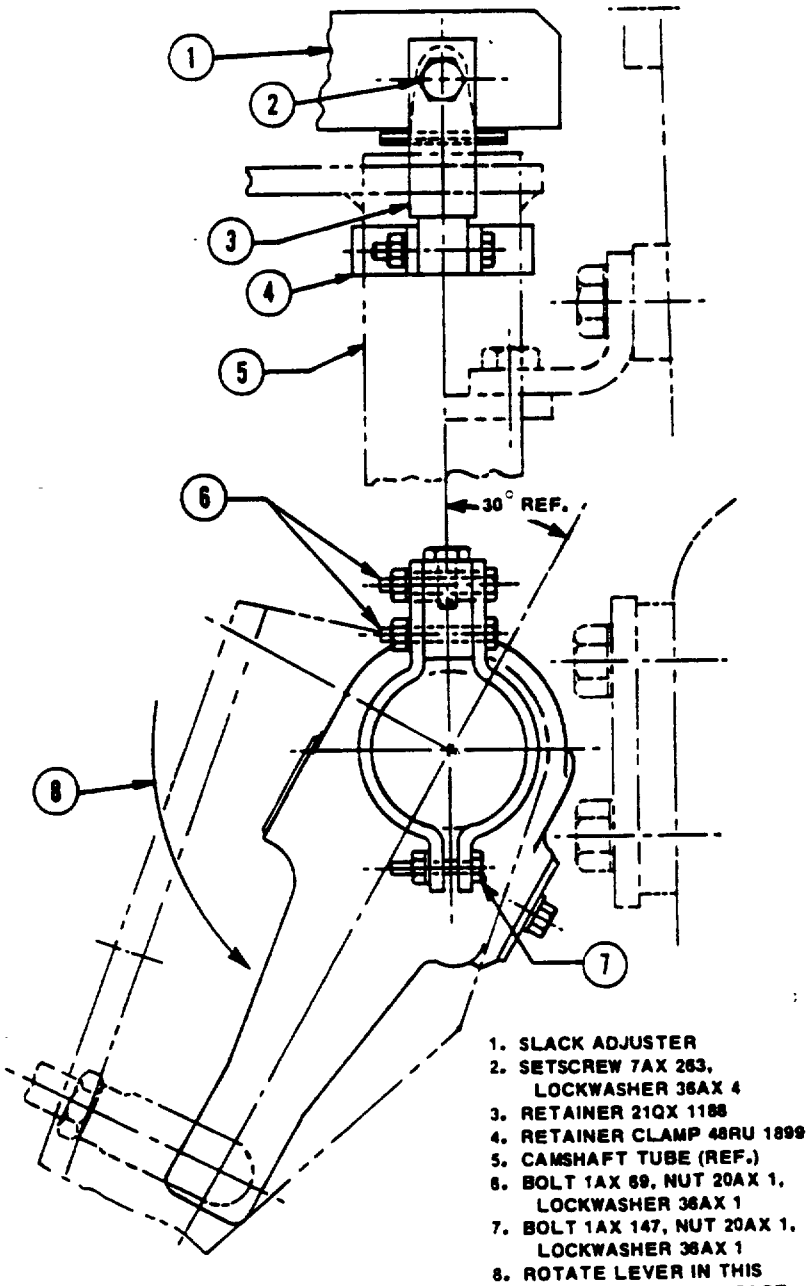

1. Cage spring brakes if used.

2. Remove existing slack adjusters from brake assembly.

3. Install new slack adjuster on camshaft. Be sure arrow on adjuster points in the direction of a brake application.

4. Install clamps 48RU1899 and retainer on camshaft tube. Do not

5. Align clevis pin hole in adjuster arm with clevis by turning worm adjustment nut clockwise, and install clevis pin.

6. Move slack adjuster control arm by hand in direction shown in illustration to make sure it is in contact with the internal stop. Proper operation depends on control arm being correctly positioned against stop.

7. Install control arm setscrew as shown in illustration, then tighten retainer slamp screw. Be sure control arm does not move when clamp is tightened.

8. Check operation of slack adjuster by operating brakes and observing if adjusting nut rotates. The nut should rotate until brake linings are at normal operating clearance. If operation is satisfactory, uncage spring brakes, if used.

SERVICE BULLETIN

OCTOBER 12, 1978 T **No.** Q567 **under** BRAKES

FOR BRANCHES AND DISTRIBUTORS ONLY.

CHASSIS AFFECTED ALLENTOWN☑ HAYWARD☐ OAKVILLE☑
(Mack Fleet Service Facts No. Q2001)

BRAKE SHOE RETURN SPRING
(DM, DMM, F, RD, RM, MB and HMM Models With FA(W)617C Front Axle)

PURPOSE To inform the field of correct return spring for the cam brakes used on this front axle.

RECOMMENDATION Check for use of correct brake shoe return spring at time of overhaul or if short life of return springs is experienced.

INFORMATION Interference between the brake shoe return spring and hub of spoke wheels has been noted on some vehicles.

The return spring recommended for this application is 8235-2258-E-525. This spring has the coils located closer to the shoes to provide increased clearance in the hub area. It is painted yellow for identification.

Any brake assembly equipped with the superseded spring (painted green) should be changed over to the yellow spring.

END

PRINTED IN U.S.A.

CIRCULATION

Service Manager	
Shop Foreman	
Night Foreman	
Night Foreman	
Inspector Leadman	
Inspector Leadman	
Inspector Leadman	
Unit Overhaul Room	
Shop Office	

SERVICE BULLETIN

OCTOBER 16, 1978 OH T **No.** Q563 **under** BRAKES

FOR BRANCHES AND DISTRIBUTORS ONLY. (Supersedes Bulletin dated FEBRUARY 27, 1978)

CHASSIS AFFECTED ALLENTOWN☑ HAYWARD☐ OAKVILLE☑

SPECIAL INSTRUCTIONS: This is a Mandatory Product Improvement campaign to be done on a no-charge basis to customer. A list of affected chassis is not available; therefore it will be necessary to visually inspect each chassis to determine need for modification. Maximum labor allowance is two hours per chassis.

BRAKE SYSTEM MODIFICATION
(All M Model Off-Highway Trucks)

PURPOSE To inform the field of a modification that will provide early "M" model vehicles with an improved dual circuit brake system.

RECOMMENDATION Modify the braking system of older vehicles as outlined here as a product improvement.

INFORMATION Current production off-highway truck brake systems are piped so that No. 3 reservoir is charged from No. 1 reservoir. This arrangement prevents loss of air from No. 3 reservoir, which supplies air for the brakes on one axle, from affecting the No. 2 reservoir which supplies air for the brakes on the other axle.

On non-current chassis which are piped as shown in Figure 1, No. 3 reservoir is charged from No. 2 reservoir. With this arrangement loss of air from one reservoir could possibly drain the other reservoir, resulting in loss of all brakes. By changing the piping to the arrangement shown in Figure 2, loss of air from one reservoir will not affect the other one.

The modification generally involves changing only one air line, item 3, Figures 1 and 2. Remove the line from No. 2 reservoir (shown in Figure 1) and connect it to No. 1 reservoir as shown in Figure 2. Due to the many different arrangements in use, specific details regarding parts and installation procedure are not provided here. Air line size and length, fittings etc. will have to be worked out locally to suit the particular chassis.

CAUTION

Be sure air for No. 3 reservoir is taken from No. 1 reservoir and not directly from compressor. If No. 3 reservoir is charged directly from the compressor, moisture will accumulate that could cause a brake malfunction during freezing weather.

CIRCULATION	
Service Manager	
Shop Foreman	
Night Foreman	
Night Foreman	
Inspector Leadman	
Inspector Leadman	
Inspector Leadman	
Unit Overhaul Room	
Shop Office	

Service Operations, Allentown, Pa., U.S.A.

MACK®

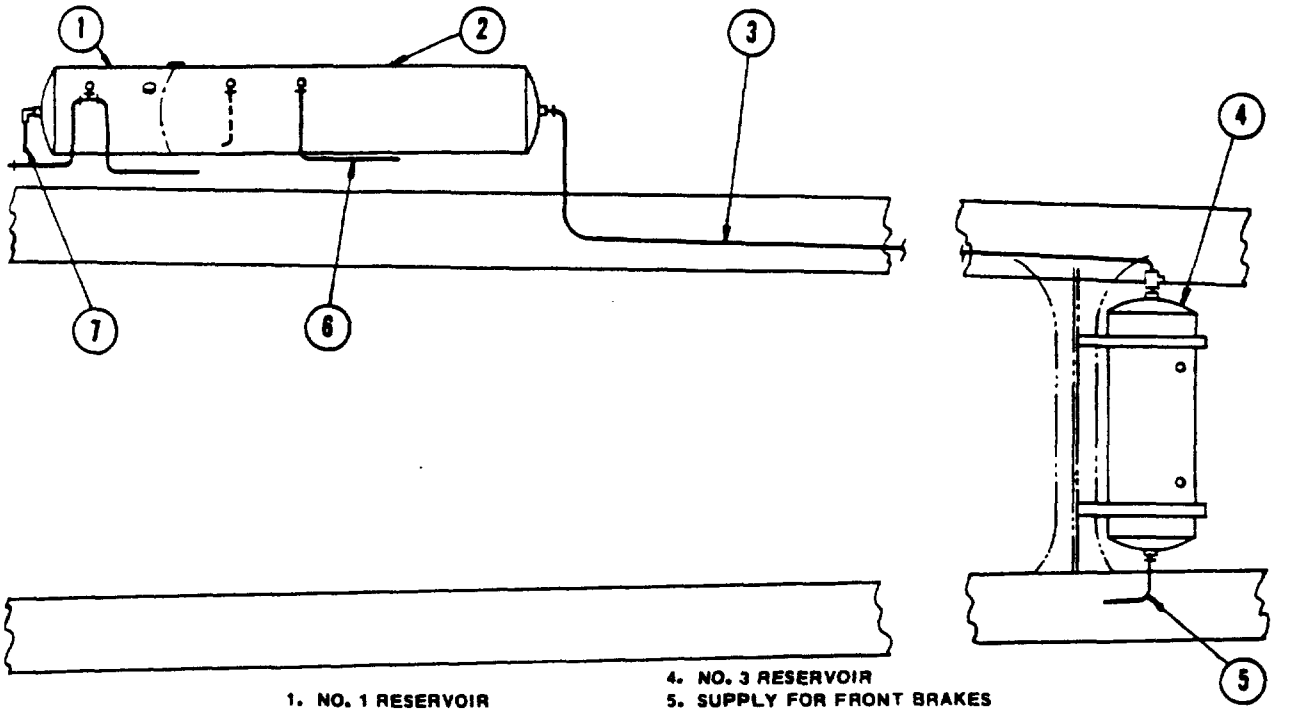

1. NO. 1 RESERVOIR
2. NO. 2 RESERVOIR
3. AIR LINE TO NO. 3 RESERVOIR
4. NO. 3 RESERVOIR
5. SUPPLY FOR FRONT BRAKES
6. SUPPLY FOR REAR BRAKES
7. COMPRESSOR DISCHARGE LINE

FIGURE 1
TYPICAL NON-CURRENT ARRANGEMENT

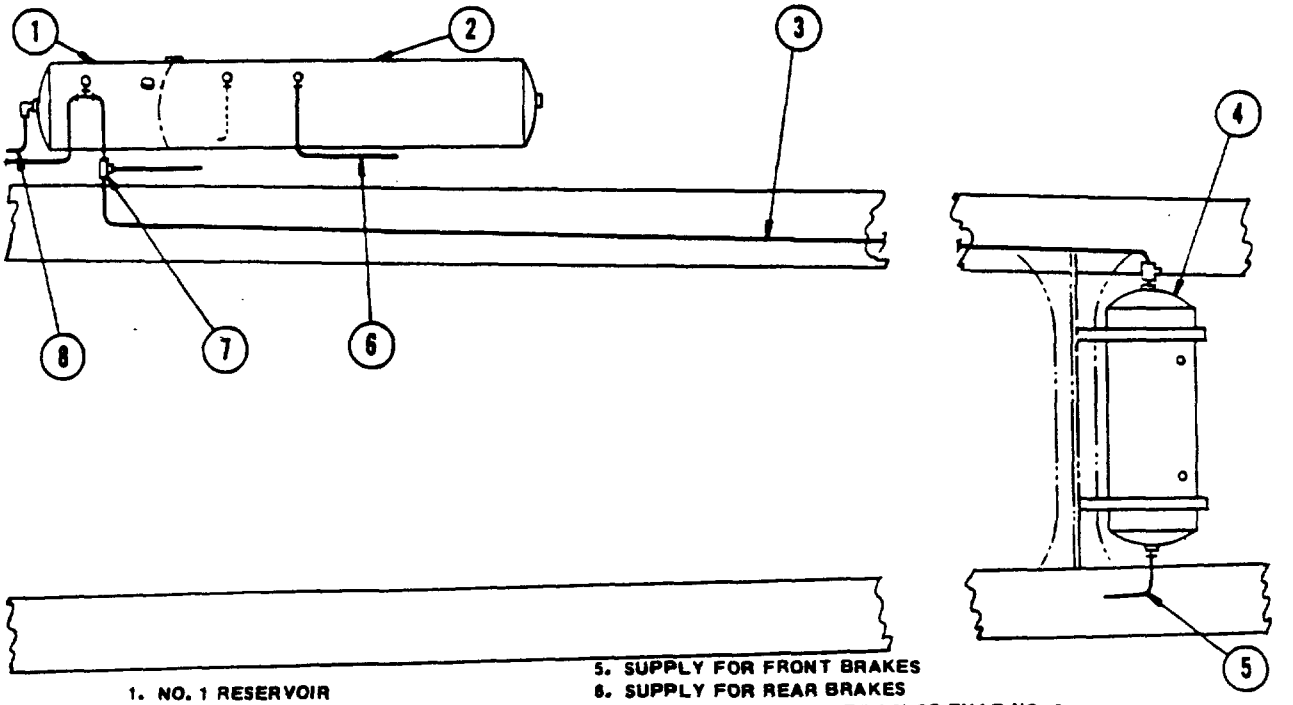

1. NO. 1 RESERVOIR
2. NO. 2 RESERVOIR
3. AIR LINE TO NO. 3 RESERVOIR
4. NO. 3 RESERVOIR
5. SUPPLY FOR FRONT BRAKES
6. SUPPLY FOR REAR BRAKES
7. CONNECT AIR LINE (ITEM 3) SO THAT NO. 3 RESERVOIR IS CHARGED FROM NO. 1 RESERVOIR.
8. COMPRESSOR DISCHARGE LINE

FIGURE 2
MODIFIED ARRANGEMENT

END

SERVICE BULLETIN

NOVEMBER 3, 1978 T **No.** Q562a **under** BRAKES

FOR BRANCHES AND DISTRIBUTORS ONLY.

CHASSIS AFFECTED ALLENTOWN☑ HAYWARD☑ OAKVILLE☑

FRONT BRAKE RATIO VALVE

(All Allentown "SX" Models and Mack Western 6-Wheel Dump or Mixer Truck Models)

PURPOSE To inform the field that, in some cases, improved life of rear brakes can be obtained by removing subject valve.

RECOMMENDATION Remove the ratio valve if premature wear of bogie brake linings and drums is experienced.

INFORMATION Under severe operating conditions, bogie brakes on vehicles equipped with a ratio valve (20QE2148R or 20QE3109R), wear faster than the front axle brakes. This condition is caused by the ratio valve limiting front axle braking force at certain performance levels. Removal of the ratio valve will allow the front brakes to provide a larger share of the braking force and thereby equalize front and rear brake life.

The ratio valve is connected in series between the brake valve and front axle brake quick release valve or anti-wheel lock controller. After the ratio valve is removed it will be necessary to fabricate a new line to connect these components. Do not splice existing lines.

On vehicles having the ratio valve and quick release valve connected by an air line, the existing tube fittings can be reused. On Allentown vehicles having the valves connected by a pipe nipple, use existing fitting at brake valve end and 90 degree elbow 63AX51094R (1/2 in. Tube x 1/2 NPTF) at quick release valve inlet port. Use plastic tubing 101AX126RF-50 (1/2 in. O. D.) for the new air line. Figures 1 and 2 are typical Allentown arrangements. Mack Western is similar except ratio valve is mounted on underside of floor (RL, RS) or engine support (WL, WS).

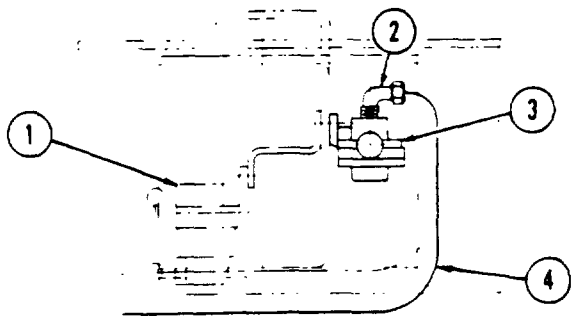

1. RATIO VALVE (REMOVE)
2. ELBOW
3. QUICK RELEASE VALVE OR CONTROLLER
4. AIR LINE TO BRAKE APPLICATION VALVE

FIGURE 1
VALVES MOUNTED SEPARATELY

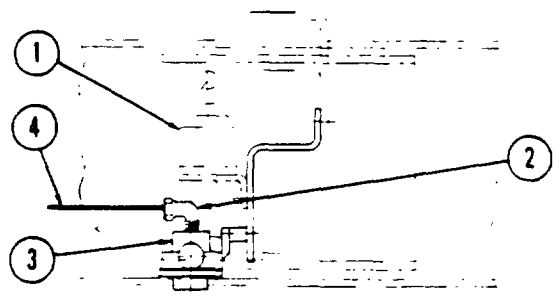

1. RATIO VALVE (REMOVE)
2. ELBOW
3. QUICK RELEASE VALVE OR CONTROLLER
4. AIR LINE TO BRAKE APPLICATION VALVE

FIGURE 2
VALVES MOUNTED TOGETHER

CIRCULATION

Service Manager	
Shop Foreman	
Night Foreman	
Night Foreman	
Inspector Leadman	
Inspector Leadman	
Inspector Leadman	
Unit Overhaul Room	
Shop Office	

END

SERVICE BULLETIN

NOVEMBER 6, 1978 **No.** Q562b **under** BRAKES

FOR BRANCHES AND DISTRIBUTORS ONLY.

CHASSIS AFFECTED ALLENTOWN☑ HAYWARD☑ OAKVILLE☑

DISC TO DRUM BRAKE CHANGEOVER
(Highway Vehicles with FA536D, 537D, 616D, 617D,
or 619D Disc Brake Equipped Front Axles)

PURPOSE To inform the field that drum brakes can legally be installed on vehicles originally equipped with disc brakes.

RECOMMENDATION Refer to the Service Sales Merchandising letter mentioned herein if a customer wants to convert his vehicle from disc to drum brakes. This work is to be done at the customer's option and expense.

INFORMATION Revisions to MVSS121 specify less stringent stopping and performance requirements for trucks. This makes it permissible to change from air-over-hydraulic disc brakes to cam or wedge type brakes if the cutomer desires.

All parts required for this changeover are listed in Service Sales Merchandising letter No. 78-121, dated October 11, 1978. Refer to this publication if a disc to drum brake conversion is planned. It is recommended that this changeover be made when the disc brakes require relining or other service in order to minimize the expense involved.

END

PRINTED IN U.S.A.

CIRCULATION

Service Manager
Shop Foreman
Night Foreman
Night Foreman
Inspector Leadman
Inspector Leadman
Inspector Leadman
Unit Overhaul Room
Shop Office

SERVICE BULLETIN

FEBRUARY 13, 1980 T **No.** Q557 **under** BRAKES

FOR BRANCHES AND DISTRIBUTORS ONLY. (Supersedes Bulletin dated MARCH 26, 1976)

CHASSIS AFFECTED ALLENTOWN☑ HAYWARD☐ OAKVILLE☑

COMBINATION BRAKE LINING
(Eaton and Rockwell 18 x 7 Cam Brakes)

PURPOSE: To announce the availability of special lining kits for service use which provide longer life than the standard lining.

RECOMMENDATION: Install a service or heavy-duty lining kit, if extended lining life is desired.

INFORMATION: The "service" lining kit for SWS681C and SS58C bogies is a combination type consisting of one organic and one semi-metallic block for each shoe. All blocks in the "heavy-duty" kits are semi-metallic.

NOTE

Semi-metallic blocks contain no asbestos and therefore may be ground to fit if required, without danger of creating asbestos dust.

Part numbers of the standard lining kits and corresponding service and heavy-duty lining kits are shown in following chart.

Bogie	Brake Type	Standard Lining Kit	Service Lining Kit	Heavy-Duty Lining Kit
SWS681L,SS58C	Eaton	202SMH218	*202SMM218	**202SMH230
SWS592C,SS65C	Rockwell	202SMH208	----------	**202SMH229

* Combination organic and semi-metallic blocks
** Semi-metallic blocks

Install lining blocks of combination kits as shown in following illustration. Note that semi-metallic blocks are shown shaded.

CIRCULATION

Service Manager	
Shop Foreman	
Night Foreman	
Night Foreman	
Inspector Leadman	
Inspector Leadman	
Inspector Leadman	
Unit Overhaul Room	
Shop Office	

MACK

NOTE

Semi-metallic brake blocks can be identified by the letters "SM" preceding the block identification number.

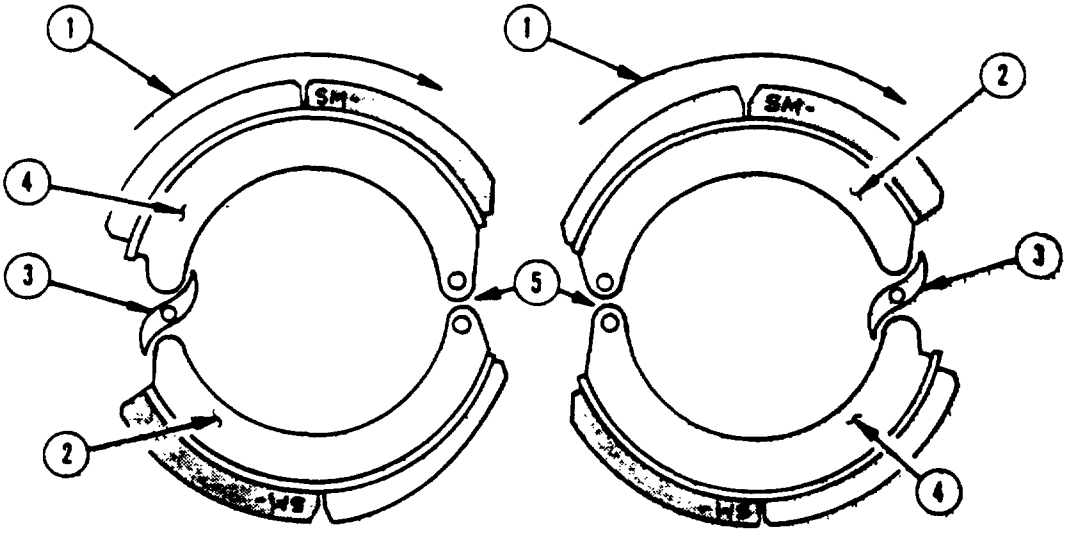

SEMI-METALLIC BLOCK ORGANIC BLOCK

1. DIRECTION OF ROTATION
2. REVERSE (SECONDARY) SHOE
3. BRAKE CAM
4. FORWARD (PRIMARY) SHOE
5. BRAKE ANCHOR

BRAKE BLOCK INSTALLATION FOR COMBINATION KITS – RIGHT SIDE SHOWN

The forward and reverse shoes may be in either position, depending on location of the cam. With cam facing toward front of vehicle, the forward shoe is at bottom. With cam at rear of vehicle, the forward shoe is at top. See illustration.

END

SERVICE BULLETIN

APRIL 7, 1980 **No.** Q562 **under** BRAKES

FOR BRANCHES AND DISTRIBUTORS ONLY. (Supersedes Bulletin dated FEBRUARY 3, 1978)

CHASSIS AFFECTED ALLENTOWN☑ HAYWARD☑ OAKVILLE☑

(Mack Fleet Service Facts No. Q2002)

BRAKE SYSTEM CHANGES
(All With MVSS121 Brake System)

PURPOSE To announce changes in MVSS121 brake system requirements and to advise of improvement that can be made to existing systems.

RECOMMENDATION Be sure all vehicles subject to MVSS121 requirements are not modified or altered in anyway except as specified in this bulletin.

INFORMATION Recent changes to Motor Vehicle Safety Standard (MVSS)121 have resulted in less stringent performance requirements in some areas. Vehicles built prior to release of the revised standards can be modified to current standards if desired. Changes which affect Mack vehicles include the following:

a. * Removal of anti-wheel lock equipment from front (steering) axle.

b. Brake chambers on front (steering) axle of FA536C, 537C reduced from type 24 to type 20.

c. Reduced chamber size to type 24 on 44,000 lb. bogies and single rear axle of 23,000 lbs. or less.

d. Lower friction brake lining on front (steering) axle. Reduce coefficient of friction from GG to EE.

e. Smaller air lines for supply and control functions provides better timing between tractor and trailer.

f. Less stringent stopping requirements that eliminate need for disc brakes on the larger front axles; cam or wedge brakes are adequate.

* CAUTION: Removal of anti-lock from the steering axle cannot safely be accomplished without item d.

If an operator wishes to take advantage of these changes to bring his vehicle in conformity with current regulations he may do so. However, due to the many brake arrangements involved and the need to insure that changes are in compliance with regulations, the part numbers required are not given in this bulletin. Mack branches or distributors can obtain those part numbers by consulting axle arrangements on micro-fiche cards for chassis built after June, 1976.

CIRCULATION	
Service Manager	
Shop Foreman	
Night Foreman	
Night Foreman	
Inspector Leadman	
Inspector Leadman	
Inspector Leadman	
Unit Overhaul Room	
Shop Office	

Service Operations, Allentown, Pa., U.S.A.

MACK

Various improvements have been made to MVSS121 brake systems that can be applied to existing systems at time of overhaul or to correct an operational problem. These improvements are listed below and installation instructions are provided.

a. Drum brake linings.
b. Front brake ratio valve.
c. Metering valve for disc brake systems.
d. Relocating front axle controller.
e. Relocating disc brake intensifier reservoir.
f. Lower ratio intensifier for disc brakes.
g. Automatic slack adjusters on rear axle with automatic adjusting front brakes.

I. Drum Brake Linings

Brake linings listed in the accompanying charts apply to all highway models equipped with cam or wedge actuated brakes. The lining mix has been changed due to increased stopping distance. The new lower friction lining will provide increased lining and drum life while maintaining overall brake performance. Due to the different characteristics of the new mix, it is not interchangeable on an individual wheel basis with linings of previous type.

Where a single drive axle is employed and one wheel brake assembly requires relining, both assemblies must be serviced with the new mix linings. Similarly, in the case of dual axle drive bogies, all four assemblies must be serviced with the new mix linings when any relining is required. Failure to observe these precautions will have an adverse effect on brake balance and brake stability may be jeopardized.

Some lining kits are combination type consisting of one organic and semi-metallic block per shoe. Instructions for installing these kits follows.

NOTE

Semi-metallic brake blocks can be identified by the letters "SM" preceding the block identification number.

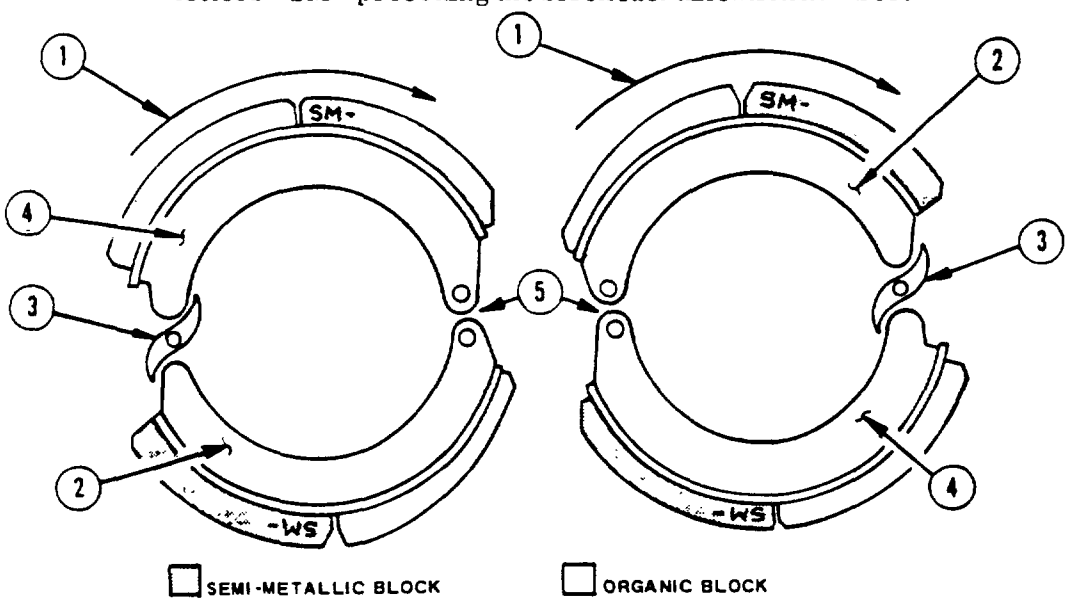

1. DIRECTION OF ROTATION
2. REVERSE (SECONDARY) SHOE
3. BRAKE CAM
4. FORWARD (PRIMARY) SHOE
5. BRAKE ANCHOR

FIGURE 1

BRAKE BLOCK INSTALLATION FOR COMBINATION KITS – RIGHT SIDE SHOWN

The forward and reverse shoes may be in either position, depending on location of the cam. With cam facing toward front of vehicle, the forward shoe is at bottom. With cam at rear of vehicle, the forward shoe is at top. See illustration.

 (Continued Page 3)

DRUM BRAKE SERVICE LINING
ALLENTOWN AND OAKVILLE CHASSIS

Axle or Bogie	Brake Type	Brake Assy. No. 1QDA-	Size	Lining Kit No.	Fasteners
FA535W, 532W	Wedge	323A, 324A	15 x 4	202SMH167	①
FAW536W, 537W		343R, 344R	15 x 5	202SMH191	②
FAW536C, 537C	Cam	4260R, 4261R	16 1/2 x 5	202SMM207	②
FA(W)617C		4239, 4240	16 1/2 x 5	202SMH207	
FA703C		4167A, 4168A	16 1/2 x 5	202SMH207	
RAS512W, RAD529W	Wedge	551A, 552A	15 x 7	202SMH159	②
L155W		568R, 569R	15 x 7	202SMH159	
R170W		568R, 569R	15 x 7	202SMH159	
RAD529C	Cam	* 4231R, 4232R	16 1/2 x 7	202SMH204-P2	②
RAS512C		* 4231R, 4232R	16 1/2 x 7	202SMH204-P2	②
RAS512C, RAD529C		4171A, 4172A	16 1/2 x 7	202SMM204	④
RAD530C		* 4233R, 4234R	16 1/2 x 7	202SMH204-P2	②
RAD608C, 707C, 708C		* 4169A, 4170A	16 1/2 x 7	202SMH204-P2	②
R170C		* 4247R, 4248R	16 1/2 x 7	202SMH204-P2	②
L155C		4241R, 4242R	16 1/2 x 7	202SMH204	②
SW56, 57W	Wedge	551A, 552A	15 x 7	202SMH159	②
SW56, 57W		568R, 569R	15 x 7	202SMH159	
SW56C, 57C	Cam	4216	16 1/2 x 7	202SMM204	②
SW56C, 57C		4224R	16 1/2 x 7	202SMH204	②
SW561C		4228R	16 1/2 x 7	202SMH220	③
SW571, 573C		4217	16 1/2 x 7	202SMH204	②
SW571, 573C		*4227R	16 1/2 x 7	202SMH210	②
SW5711, 5731C		*4228R	16 1/2 x 7	202SMH220-P2	③

* These assemblies use combination brake linings. Assemble as shown in Figure 1. Combination linings have been effective in many instances in eliminating noise and complaints of short lining life.

① Bolt 8235-15X882, Nut 20 AX1, Lockwasher 36AX1. Install per Bulletin Q72 under BRAKES.

② Rivet 341SZ158

③ Rivet 341SZ151

④ Rivet 341SZ110-P2

APRIL 7, 1980

DRUM BRAKE LINING
MACK WESTERN CHASSIS

AXLE OR BOGIE	BRAKE TYPE	BRAKE ASSEMBLY NO. 1QDA	SIZE	LINING KIT NO.	FAST-ENERS
FAW536C, 537C	Cam	49333/334R-P5 (R) 49333/334R-P6 (W)	16 1/2 x 5	202SMM207	①
FAW536W, 537W	Wedge	49319/320R-P1* 49319/320R-P2** 49319/320R-P3***	(14° x 12") (12° x 12") 15 x 5 (14° x 9")	202SMH159	①
FAW536/537W	Wedge	49355/356R	15 x 4	202SMM225	②
FF-9311	Wedge	49345/346R(R)	15 x 4	202SMM225	②
FF-9311	Wedge	49357/358R(W)	15 x 4	202SMM225	②
FF-9311	Wedge	49345/346R-P2(RW)	15 x 4	202SMM225	②
FF-931-C	Cam	49335/336R-P3	16 1/2 x 5	202SMM225	①
FF-931-W	Wedge	49337/338R-P1* 49337/338R-P2** 49337/338R-P3***	(14° x 12") (12° x 12") 15 x 5 (14° x 9")	202SMH191	①
FL931W	Wedge	39323/324R-P1	15 x 6	202SM139-P2	①
RAD-529-C	Cam	4231/4232R	16 1/2 x 7	202SMH204	①
R-170-C	Cam	49317/318R-P13+ 49317/318R-P15++	16 1/2 x 7	202SMH204	①
R-170-W	Wedge	49319-320R-P9 49319/320R-P12	(12°) (10°) 15 x 7	202SMH159	①
SWS56/57/76C	Cam	49317/318R-P11	16 1/2 x 7	202SMH204	①
SWS56/57/76W	Wedge	49319/320R-P10	(12°) 15 x 7	202SMH159	①
SWS71/573C	Cam	49317/318R-P12	16 1/2 x 7	202SMH210#	①
SL,SQ(C)	Cam	49317/318R-P17FWD+ 49317/318R-P18RR+ 49317/318R-P19FWD++ 49317/318R-P20RR++	16 1/2 x 7	202SMH204	①
SL,SQ(W)	Wedge	49319/320R-P11	15 x 7	202SMH159	①
SSHD(C)	Cam	49317/318R-P13FWD+ 49317/318R-P14RR+	16 1/2 x 7	202SMH204	①
SSHD(C)	Cam	49317/318R-P15FWD++ 49317/318R-P16RR++	16 1/2 x 7	202SMH204	①

* 4 x 2 Tractors Over 120 W/B
** 4 x 2 Trucks & Tractors 120 W/B & Under
*** All 6 x 4
① Rivet 341SZ158
② Rivet 8235-RV3108

\+ Standard Suspension
++ Neway Suspension
\# Combination Lining

II. Front Brake Ratio Valve

An improved ratio valve 20QE3166R that provides more reliable cold weather performance is available. The non-current valve may malfunction due to cold weather freeze-up. Some modifications are required to install the new valve as a service replacement for old. Instructions are provided herein.

A ratio valve can be installed on chassis not originally equipped with one for improved brake performance. A ratio valve delays air pressure to the front brakes until pressure at rear brakes exceeds 10 psi. Above 10 psi and up to approximately 75 psi the valve maintains a pressure differential between front and rear brakes with the front brakes operating at the lower pressure. The pressure differential becomes progressively less as braking pressure approaches 75 psi and above 75 psi front and rear brake application pressure is equal. Procedure for installing a ratio valve on vehicles not so equipped is also provided.

CAUTION

It is illegal to install or use a manual front wheel limiting valve on a vehicle equipped with MVSS 121 brake system.

Parts involved are shown in following list. Actual requirements will depend on vehicle model, existing brake equipment and whether previosuly equipped with a ratio valve.

Qty.	Part Number	Description
1	20QE3166R	Ratio Valve
1	*26QB2305	Bracket, Ratio Valve Mounting (R, RD, DM, U)
1	*29QE2218	Bracket, Ratio Valve Mounting (F)
**	101AX126R	Tube, Plastic, 1/2" O.D.
2	63AX51085R	Connector (F Model)
2	63AX163	Connector (F Model)
3	63AX51093R	Elbow(R, U, DM)
2	1AX19	Bolt, Valve Mntg., 5/16-24 x 7/8
2	1AX114	Bolt, Valve Mntg., 5/16-24 x 1
2	1AX36	Bolt, Brkt. Mntg., 5/16-24 x 1 1/4
2	1AX400	Bolt, Brkt. Mntg., 5/16-24 x 1 1/2
2	1AX33	Bolt, Brkt. Mntg., 3/8-24 x 7/8
2	20AX2	Nut, 5/16-24
2	20AX3	Nut, 3/8-24
2	36AX3	Lockwasher, 3/8 I.D.
2	36AX22	Lockwasher, 5/16 I.D.
2	37AX68	Flat Washer, 11/32 I.D.

* Not required if originally equipped with ratio valve.
**As required.

NOTE

On Mack Western chassis, reuse existing brackets by elongating mounting holes as required.

Procedure

1. Vehicles not originally equipped with ratio valve (no anti-wheel lock).

   a. Install ratio valve bracket on chassis. Use quick release valve mounting holes for R, U (Figure 2) and RD, DM (Figure 3). Use alcohol evaporator mounting holes for F models (Figure 4). Mount ratio valve on bracket (except MB). A separate bracket is not required for the MB.

   b. On MB models the ratio valve is installed on outboard side of accessory mounting plate. This plate is located adjacent to and outboard of the right-hand tilt bracket. Install valve with inlet port facing up.

c. Pipe the ratio valve as shown in Figures 2, 3 or 4. (MB not shown; pipe as shown in Figure 4 for F models). Basically this involves connecting the line from brake application valve, that originally went to the quick release valve, to the supply (input) port of the ratio valve. The ratio valve's output port is then connected to the quick release valve. In effect , the ratio valve is inserted into the application valve-to-quick release valve line.

2. Vehicles equipped with ratio valve 20QE3109R or 20QE2148R can be changed over to new valve 20QE3166R as follows:

a. Disconnect two air lines from old valve and unbolt valve from mounting bracket.

b. Install new valve on bracket with inlet port facing up. Use existing fasteners.

c. Replace fittings on ratio valve hoses to match changed thread size if original valve is 20QE3109R

d. Pipe system as shown in Figures 2,3 or 4 except that the line shown going to quick release valve is connected to signal port of the anti-wheel lock controller/valve assembly. A separate quick release valve is not used with anti-wheel lock systems.

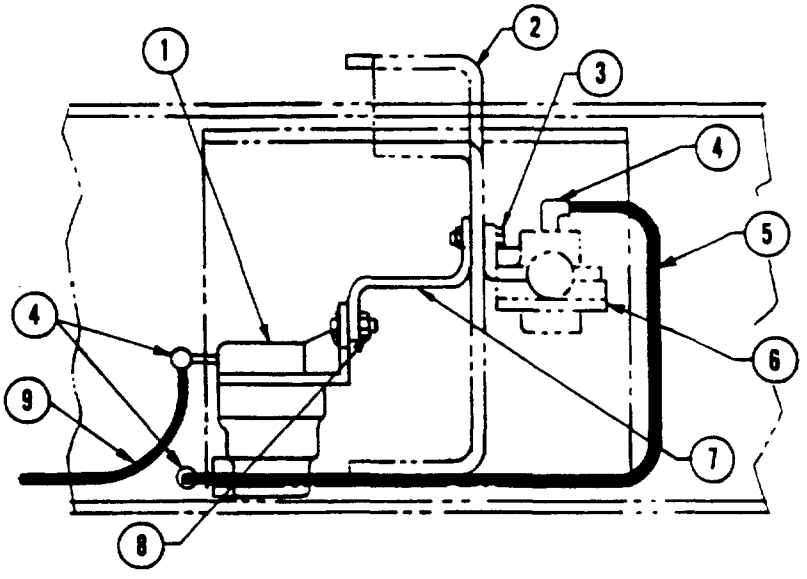

1. RATIO VALVE 20QE3166R
2. CROSSMEMBER
3. BOLT 1AX 36, NUT 20AX 2 LOCKWASHER 36AX 22, FLATWASHER 37AX 68
4. ELBOW 63AX 51093P
5. AIR LINE - QUICK RELEASE VALVE TO RATIO VALVE
6. QUICK RELEASE VALVE (REFERENCE)
7. BRACKET 26QB 2305
8. BOLT 1AX 114, NUT 20AX 2, LOCKWASHER 36AX 22
9. AIR LINE - RATIO VALVE TO BRAKE APPLICATION VALVE

FIGURE 2
R AND U MODELS

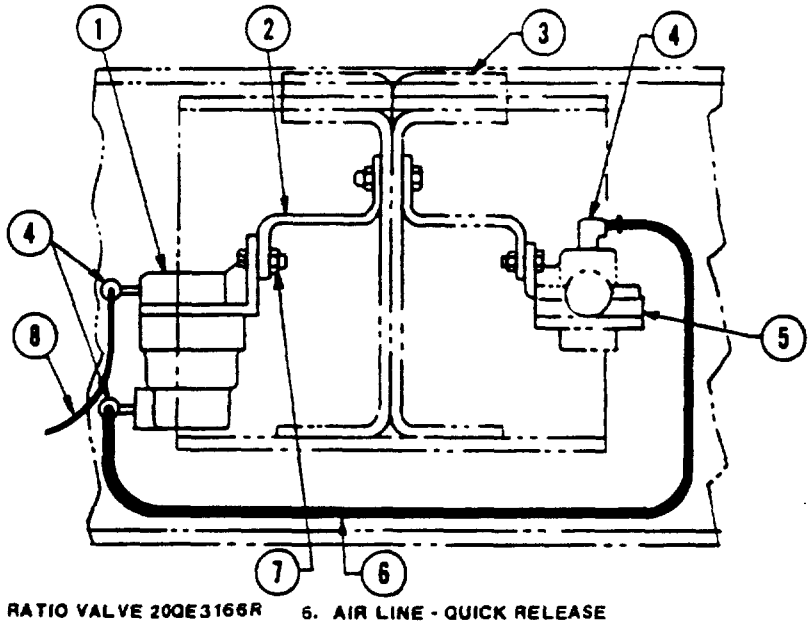

1. RATIO VALVE 20QE3166R
2. BRACKET 26QB 2305
3. CROSSMEMBER
4. ELBOW 63AX 51093R
5. QUICK RELEASE VALVE (REFERENCE)
6. AIR LINE - QUICK RELEASE TO RATIO VALVE
7. BOLT 1AX 114, NUT 20AX 2, LOCKWASHER 36AX 22
8. AIR LINE - RATIO VALVE TO BRAKE APPLICATION VALVE

FIGURE 3
RD AND DM MODELS

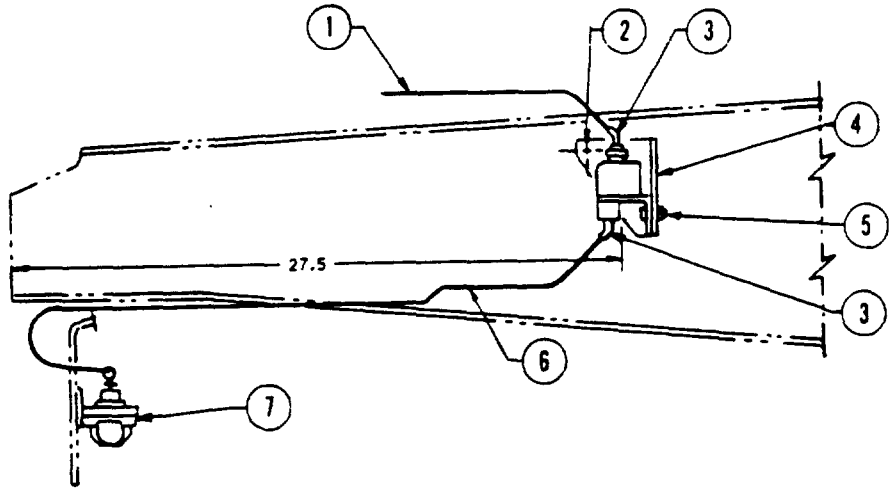

1. AIR LINE - RATIO VALVE TO BRAKE APPLICATION VALVE
2. BOLT 1AX 33, NUT 20AX 3, LOCKWASHER 36AX 3
3. CONNECTOR 63AX 51085R, CONNECTOR 63AX 163, ELBOW 63AX 343 (EXISTING)
4. BRACKET 29QE 2218
5. BOLT 1AX 19, NUT 20AX 2, LOCKWASHER 36AX 22
6. AIR LINE - QUICK RELEASE TO RATIO VALVE
7. QUICK RELEASE VALVE

FIGURE 4
F MODELS

III. Air Over Hydraulic Disc Brake Improvements

Short life of disc brake linings has been experienced by some operators. Short life of disc brakes generally occurs when rear axle or bogie brakes are not adjusted correctly. Disc brakes are self-adjusting and minimum lining clearance is maintained at all times. As a result, they will provide the major part of the braking force under light braking conditions if the rear wheel brakes are out of adjustment.

If a particular operation entails considerable light braking, disc brake life can be increased by installing a metering valve in the hydraulic system. It is similar in function to and replaces the ratio valve installed in the air system. The metering valve reduces pressure to the disc brakes under low application pressures, causing the rear brakes to assume a larger proportion of the braking effort. At higher application pressures full pressure is restored to the disc brakes.

The intensifier used to generate hydraulic pressure for disc type front brakes is available in two ratios, 17:1 and 23:1. The ratio indicates hydraulic pressure in relation to air pressure. For example, at an application pressure of 100 psi in the air brake system, 1700 psi will be developed in the hydraulic system with the 17:1 intensifier, or 2300 psi with the 23:1 intensifier. If an operator has a vehicle equipped with the 23:1 unit and desire to reduce front wheel braking force, the 17:1 ratio intensifier can generally be installed. This modification is permissible on highway vehicles equipped with a bogie rated at 55,000 pound or less.

Correct adjustment of rear axle manual slack adjusters is essential for achieving correct balance between front and rear brakes. If the operator prefers, automatic slack adjusters can be installed on the SW56, 57, 573 and 76 series bogies to aid in maintaining correct adjustment.

In addition to the brake system improvements listed previously, some general disc brake service procedure along with available service kits are given here.

Procedure

1. Installing metering valve 20QE2191R. See Figure 5 (R, U, and DM) and Figure 6 (MB).

   a. Remove ratio valve 20QE3109R installed in air line between brake application valve and anti-wheel lock controller or quick release valve. This valve is not used when a metering valve is installed. Install a new air line from brake application valve to controller or quick release valve.

   b. Remove the tee fitting to which the intensifier unit and caliper hydraulic lines are connected. Install the metering valve into these lines in place of the tee. Connect the "M" port to intensifier unit and "F" ports (two) to the brake calipers.

      Fabricate a suitable metering valve mounting bracket locally. Utilize any convenient bolts or holes to secure the bracket.

Parts required:

Qty.	Part Number	Description
1	20QE2191R	Pressure Metering Valve
3	63AX606	Nut, Inverted Flare

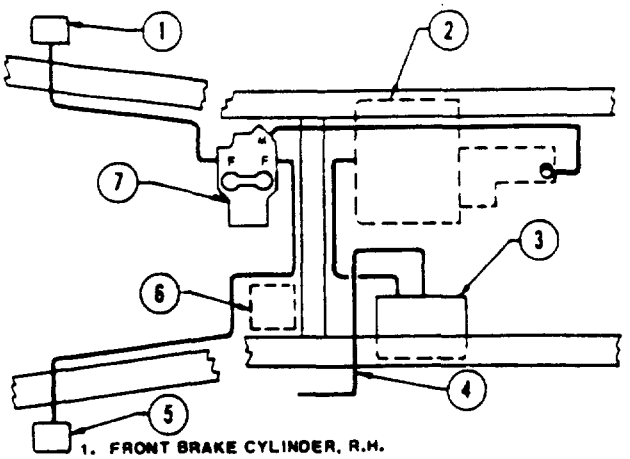

1. FRONT BRAKE CYLINDER, R.H.
2. INTENSIFIER
3. FRONT BRAKE CONTROLLER
4. AIR LINE - CONTROLLER TO BRAKE APPLICATION VALVE
5. FRONT BRAKE CYLINDER, L.H.
6. RATIO VALVE - REMOVE
7. METERING VALVE 20QE 2191R

FIGURE 5
R, U AND DM MODELS

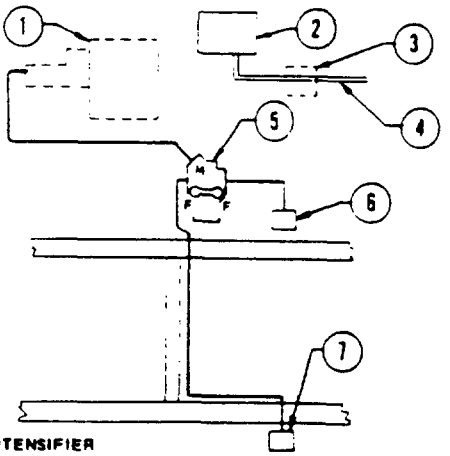

1. INTENSIFIER
2. FRONT BRAKE CONTROLLER
3. RATIO VALVE - REMOVE
4. AIR LINE - CONTROLLER TO BRAKE APPLICATION VALVE
5. METERING VALVE
6. FRONT BRAKE CYLINDER, R.H.
7. FRONT BRAKE CYLINDER, L.H.

FIGURE 6
MB MODELS

2. Installing low ratio intensifier.

   a. The 17:01 intensifier is directly interchangeable with the 23:1 unit.

Parts required

New Part	Description	Replaces
8QE429R(17:1)	Brake Intensifier	8QE430R(23:1)

3. Installing automatic slack adjusters on SW56, 57, 571, 573 and 76 series bogies.

   a. Remove existing slack adjusters.

   b. Install new slack adjuster on brake camshaft. Be sure arrow on adjuster points in direction unit rotates for a brake application. See Figure 7.

   c. Install slack adjuster retainer bracket on brake assembly using existing spider mounting bolts as shown in Figure 8. Do not tighten the bolts. Align clevis pin hole in slack adjuster with push rod clevis by turning worm adjusting nut clockwise and install clevis pin.

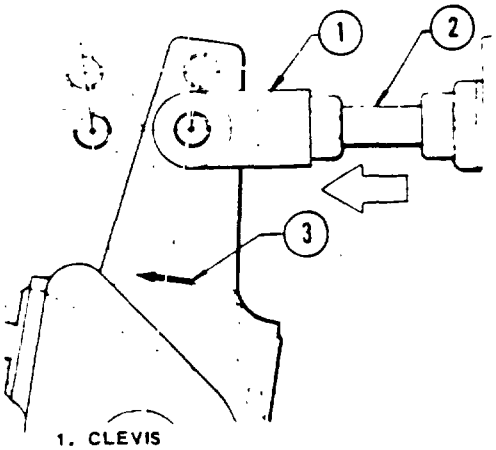

1. CLEVIS
2. PUSH ROD
3. DIRECTION OF BRAKE APPLICATION

FIGURE 7

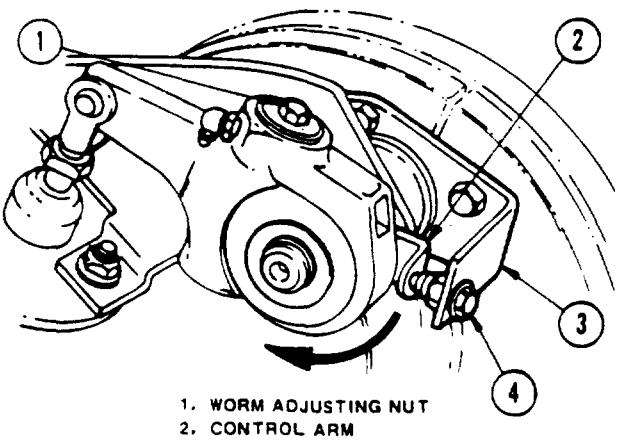

1. WORM ADJUSTING NUT
2. CONTROL ARM
3. RETAINER BRACKET
4. SETSCREW

FIGURE 8

   d. Move slack adjuster control arm in direction shown in Figure 8 to be sure it is in contact with the internal stop. Proper operation depends on control arm being correctly positioned against stop.

   e. Install control arm setscrew as shown in Figure 8 and tighten retainer bracket screws. Be sure control arm does not move when retainer screws are tightened.

f. Check operation of slack adjuster by operating brakes and observing if adjusting nut rotates. After establishing that operation is satisfactory, uncage spring brakes, if used.

Parts required per bogie:

Qty.	Part Number	Description
4	25QDA335-P6	Slack Adjuster
2	72RU2861-P5	Slack Adjuster Retainer Bracket (Rockwell Brakes)
2	72RU2861-P6	Slack Adjuster Retainer Bracket (Rockwell Brakes)
2	72RU3254A	Slack Adjuster Retainer Bracket (Eaton Brakes)
2	72RU3254A-P2	Slack Adjuster Retainer Bracket (Eaton Brakes)
4	7AX262Z	Setscrew
4	21AX317	Nut, Setscrew
8	37AX473	Washer, Setscrew Nut

4. Servicing the disc brake caliper.

Various components and service kits are available to expedite overhaul of these units. These items are shown in accompanying parts list.

General repair procedures are given in Highway Vehicle Service Manual TS442. Follow these procedures, taking particular care to observe the following points:

a. Minor corrosion and stains in the piston bores can be polished with crocus cloth. Do not use emery cloth or other abrasives.

Also check seal groove for scoring, nicks or corrosion. If any defects are noted, replace caliper.

b. The piston's outer diameter is plated and sized to a very close tolerance and must not be refinished by any means. If the O.D. is scored, knicked, corroded or the plating is worn or damaged, the piston must be replaced.

c. Current service brake lining for disc brakes is of low friction mix and will prevent front brakes developing excessive braking force. Linings made of this mix are identified by the letters "BX XS EE" ink stamped on edge of lining. See Figure 9.

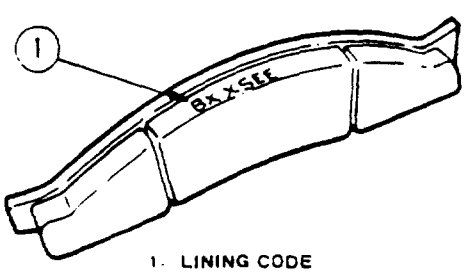

1. LINING CODE
FIGURE 9

5. Disc brake rotors may be machined to eliminate heat checking or grooving in the same manner as brake drums. Rotors may be machined to a minimum thickness of 1.630 inches.

Parts required:

Qty.	Part Number	Description
*	4891-Ø9726602	Kit, Boot and Seal
**	4891-Ø9906101	Kit, Shoe and Lining
***	4891-Ø9829401	Piston
*	4891-Ø929501	Lining Holddown Kit

* Services one caliper
** Service two calipers
*** As required

IV. Relocating Front Brake Controller

Early production R, RD, DM and U models with MVSS121 brake systems had the anti-wheel lock controller mounted on the engine front support crossmember. Current production vehicles have the controller mounted on a frame crossmember. The controller was relocated to improve engine accessibility; line routing and brake operation.

Chassis	Qty.	Part Number	Description
	AR	101AX126RF50	Hose (1/2 O. D.)
	AR	101AX127RF50	Hose (5/8 O. D.)
All w/	1	26QB2241	Controller Mounting Bracket
Eaton	1	26QB2305	Ratio Valve Mounting Bracket
Controller	2	1AX63	Bolt, 5/16-24 X 2
& Channel	1	1AX6	Bolt, 5/16-24 X 1-3/4
Type cross-	2	1AX114	Bolt, 5/16-24 x 1
member	5	20AX2	Nut
	5	36AX22	Lockwasher
	2	37AX68	Flatwasher
	3	35AX1027	External Tooth Lockwasher
	AR		Hose
with	1	26QB2239	Controller Mounting Bracket
Eaton	2	1AX60	Bolt, 1/2-20 x 1-1/2
Controller	3	1AX6	Bolt, 5/16-24 x 2
& I-beam	5	20AX5	Nut
Cross-	2	36AX5	Lockwasher
member	3	36AX22	Lockwasher
	3	35AX1027	External Tooth Lockwasher
with	3	1AX13	Bolt, 3/8-24 x 1-1/2
Goodrich	3	20AX3	Nut
Controller	3	36AX3	Lockwasher
	3	35AX916	External Tooth Lockwasher

Eaton Controller - Mount on the frame crossmember located immediately behind cab. Locate approximately as shown in Figure 10. Be sure controller clears frame, crossmember and any adjacent chassis equipment before drilling mounting holes. Shift controller as necessary to provide adequate clearance. Note that two mounting arrangements are used, depending on type of crossmember. See Figures 10 and 11.

NOTE

To conform with current production, the ratio valve is relocated along with the controller.

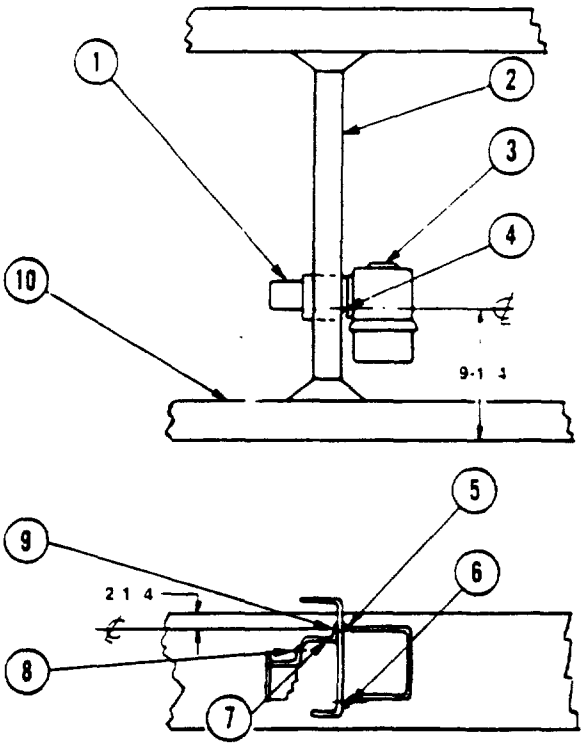

1. RATIO VALVE
2. CROSSMEMBER
3. CONTROLLER
4. OUTBOARD MOUNTING BOLT
5. BRACKET 26QB 2241
6. 1AX 6. 20AX 2. 36AX 22. *35AX 1027
7. BRACKET 26QB 2305
8. 1AX 114. 20AX 2. 36AX 22.
9. 1AX 63. 20AX 2. 36AX 22. 37AX 68. *35AX 1027
10. L.H. FRAME RAIL

*INSTALL BETWEEN CONTROLLER AND BRACKET

FIGURE 10
MOUNTING EATON CONTROLLER ON CHANNEL TYPE CROSSMEMBER

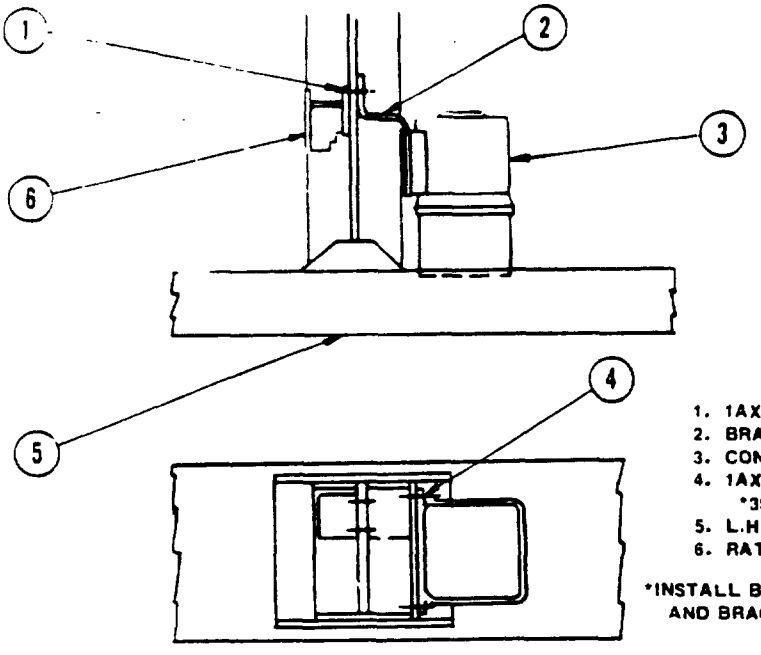

1. 1AX60. 20AX 5. 36AX 5
2. BRACKET 26QB 2239
3. CONTROLLER
4. 1AX 4. 20AX 2. 36AX 22. *35AX 1027
5. L.H. FRAME RAIL
6. RATIO VALVE

*INSTALL BETWEEN CONTROLLER AND BRACKET

FIGURE 11
INSTALLING EATON CONTROLLER ON I-BEAM CROSSMEMBER

Goodrich Controller - Mount on inside of left hand frame rail, close to the cab crossmember as shown in Figure 12. Air and electrical lines routed along the frame rail may have to be raised or lowered in this area to clear the controller.

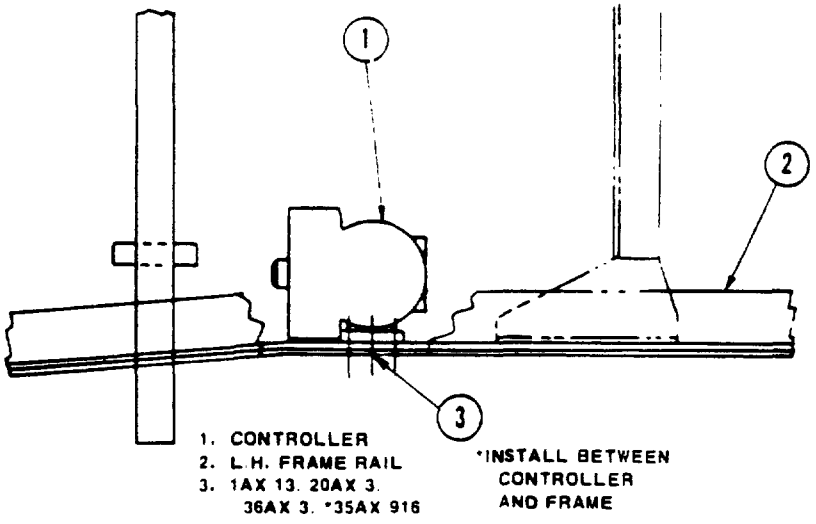

FIGURE 12
MOUNTING GOODRICH CONTROLLER

Repipe the relocated components as shown in Figure 13. Use same size air lines as original installation and be sure to use non-restrictive fittings. If possible, reuse original fittings. Do not splice air lines. Use a complete new hose if a longer line is required.

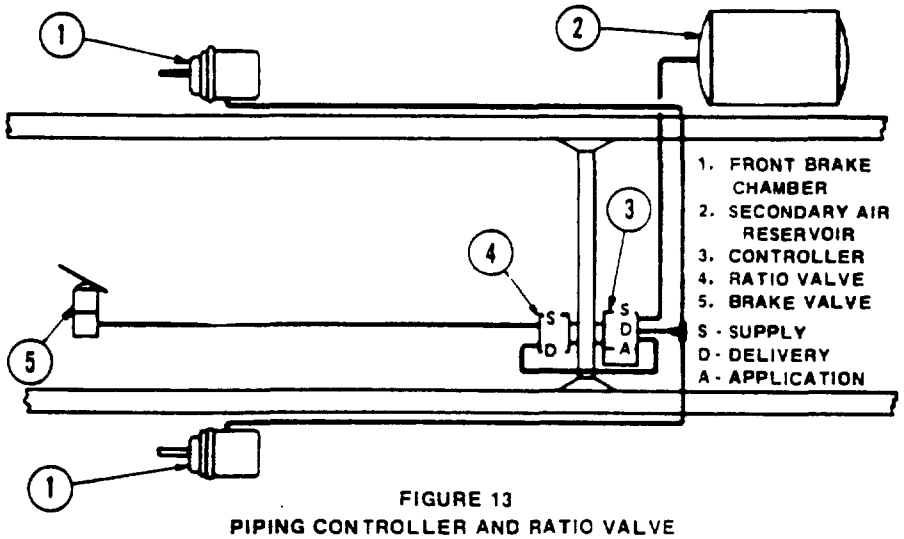

FIGURE 13
PIPING CONTROLLER AND RATIO VALVE

V. Relocating Intensifier Reservoir

The brake intensifier is a combination air chamber and hydraulic master cylinder. It utilizes brake system air pressure to develop hydraulic pressure in the master cylinder. Hydraulic pressure is used to operate the disc brakes.

A reservoir is required to contain a reserve supply of brake fluid. On early production R, RD and DM models the reservoir was mounted on the cab support crossmember. It has since been relocated to engines side of dash panel to eliminate possible interference with body components. The reservoir can be relocated per following procedure. Note that parts required vary with chassis model.

Parts required:

Chassis	Qty.	Part Number	Description
DM400 DM600	1	24QE3197	Bracket. Reservoir Mounting
	1	*42QEA40400-P122	Flex Hose Assembly
	2	1AX111	Bolt. 3 8-24 X 3 4
	2	20AX3	Nut. 3 8-24 Hex
	2	36AX3	Lockwasher
R.RD w/ Fiber-glass Hood (W/O Air Susp.Cab.)	1	24QE3198	Bracket. Reservoir Mounting
	1	*42QEA40400-P120	Flex Hose Assembly
	1	83AX629	Clamp. Hose
	1	239AX331	Screw. =10-16 X 1 2.Self drilling
R.RD w/ Fiberglass Hood and Air Susp. Cab.	1	24QE2397	Bracket. Reservoir Mounting
	1	*42QEA40400-P120	Flex Hose Assembly
	1	83AX629	Clamp. Hose
	1	239AX331	Screw. =10-16 X 1 2.Self drilling
	2	4AX22	Bolt. 1 4-20 X 1
	2	36AX1	Lockwasher. 1 4
	2	#1AX445	Bolt. 1 4-28 X 2-5 8
R.RD w/ Sheetmetal Hood	1	24QE2397	Bracket. Reservoir Mounting
	1	*42QEA40400-P120	Flex Hose Assembly
	1	83AX629	Clamp. Hose
	2	4AX22	Bolt. 1 4-20 X 1
	2	36AX1	Lockwasher
	2	#1AX445	Bolt. 1 4-28 X 2-5 8

* Make from 973AX130FT25 hose and (2) 63AX1720 fittings

\# Purchase locally.

Refer to Figures 14 through 18 for the reservoir location and mounting instructions.

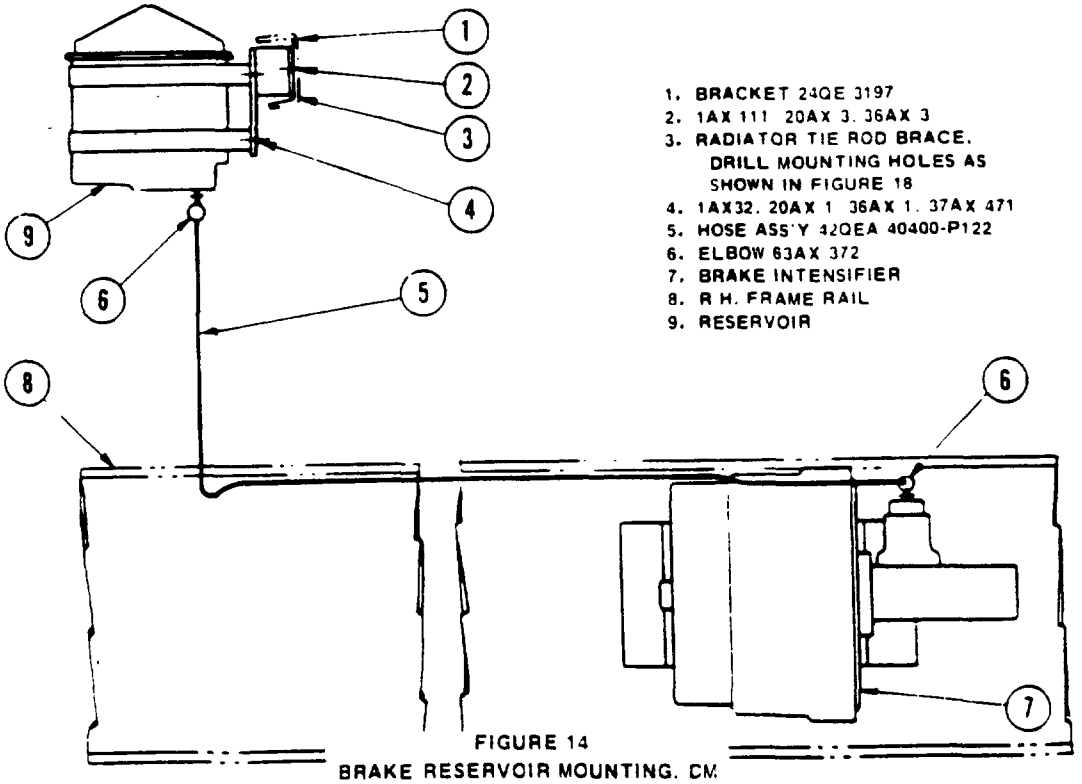

FIGURE 14
BRAKE RESERVOIR MOUNTING. CM

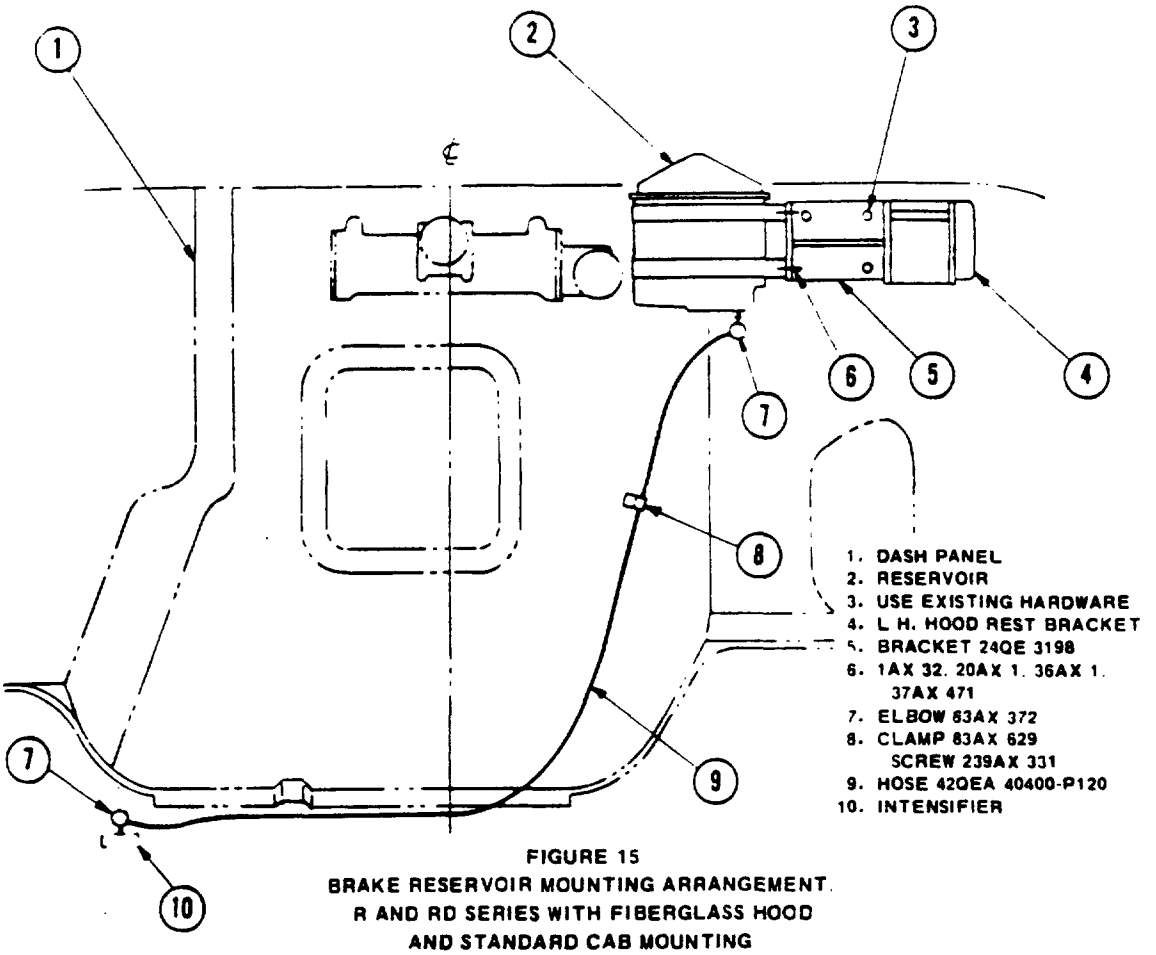

FIGURE 15
BRAKE RESERVOIR MOUNTING ARRANGEMENT.
R AND RD SERIES WITH FIBERGLASS HOOD
AND STANDARD CAB MOUNTING

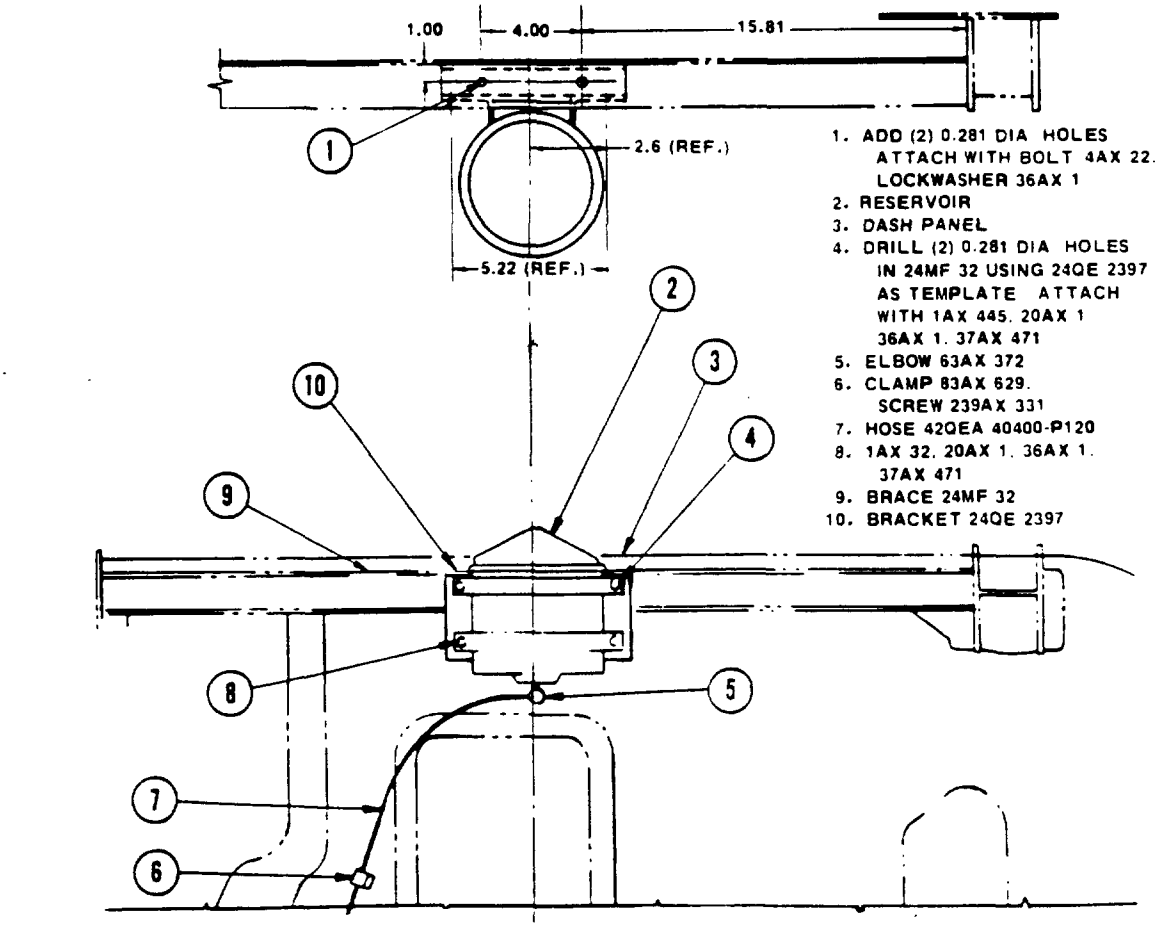

FIGURE 16
BRAKE RESERVOIR MOUNTING ARRANGEMENT.
R AND RD SERIES WITH FIBERGLASS HOOD
AND AIR SUSPENDED CAB

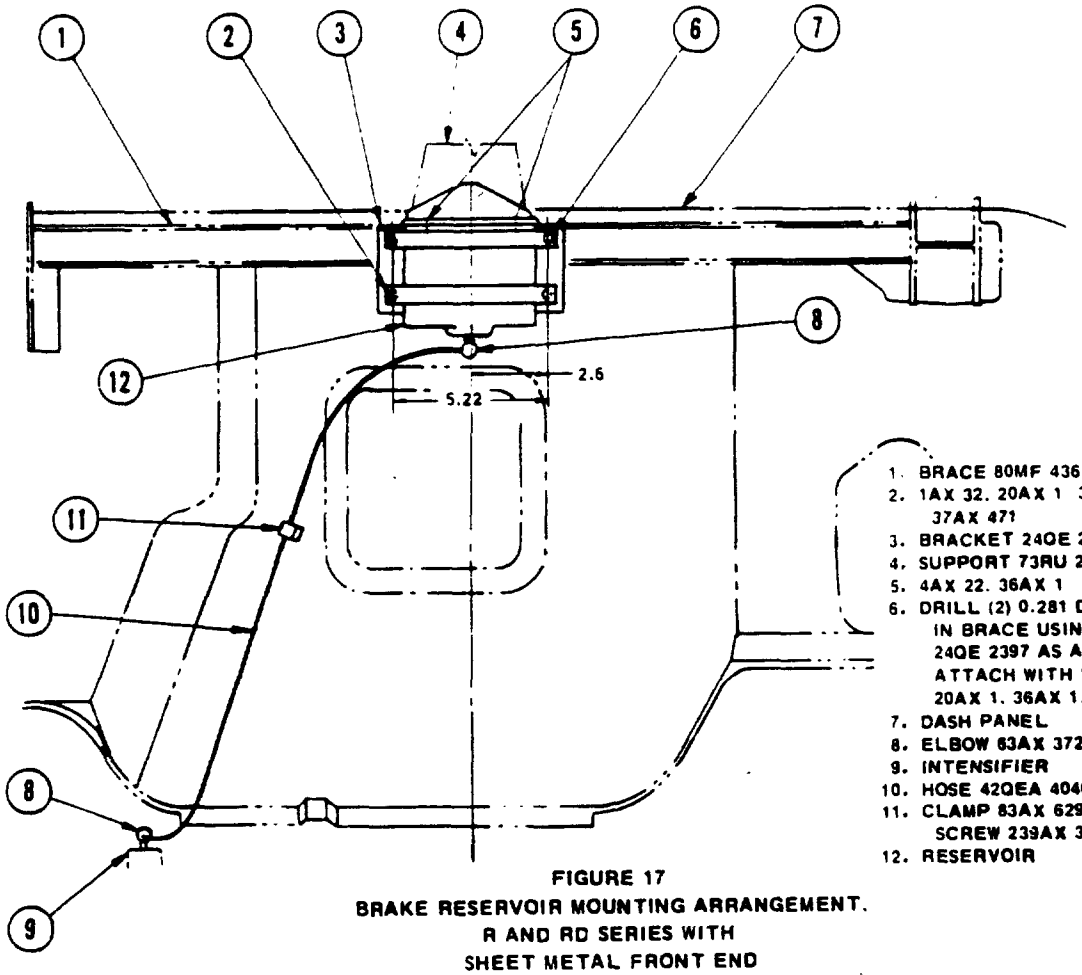

1. BRACE 80MF 436 (REF)
2. 1AX 32. 20AX 1 36AX 1 37AX 471
3. BRACKET 24QE 2397
4. SUPPORT 73RU 22077 (REF)
5. 4AX 22. 36AX 1
6. DRILL (2) 0.281 DIA. HOLES IN BRACE USING BRACKET 24QE 2397 AS A TEMPLATE. ATTACH WITH 1AX 445. 20AX 1. 36AX 1. 37AX 471
7. DASH PANEL
8. ELBOW 63AX 372
9. INTENSIFIER
10. HOSE 42QEA 40400-P120
11. CLAMP 83AX 629. SCREW 239AX 331
12. RESERVOIR

FIGURE 17
BRAKE RESERVOIR MOUNTING ARRANGEMENT.
R AND RD SERIES WITH
SHEET METAL FRONT END

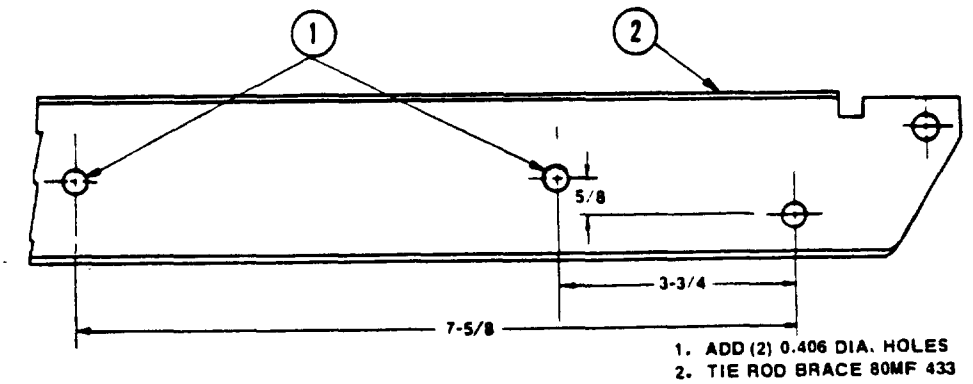

1. ADD (2) 0.406 DIA. HOLES
2. TIE ROD BRACE 80MF 433

FIGURE 18
BRAKE RESERVOIR MOUNTING HOLES

CAUTION

If the intensifier must be relocated, maintain the hydraulic fluid supply port in the top or upright position.

Hydraulic System Bleeding

Whenever brake system hudraulic components have been relocated, it is necessary to bleed the system of air. First bleed the master cylinder at the bleed vent then bleed each front wheeel caliper. Use a pressure bleeder or bleed the system manually. After bleeding replenish the brake fluid in the hydraulic reservoir.

VI. Low Ratio Intensifier

The intensifier used to generate hydraulic pressure for disc type front brakes is available in two ratios, 17:1 and 23:1. The ratio indicates hydraulic pressure in relation to air pressure. For example, at an application pressure of 100 psi in the air brake system, 1700 psi will be developed in the hydraulic system with the 17:1 intensifier, or 2300 psi with the 23:1 intensifier.

If an operator has a vehicle equipped with the 23:1 unit and desire to reduce front wheel braking force, the 17:1 ratio intensifier can generally be installed. This modification is permissible on highway vehicles equipped with a bogie rated at 55,000 pound or less. Part number of the 17:1 intensifier is 8QE429R; part number of 23:1 intensifier is 8QE430R.

END

SERVICE BULLETIN

MAY 2, 1980 **No.** Q568 **under** BRAKES

FOR BRANCHES AND DISTRIBUTORS ONLY.

CHASSIS AFFECTED ALLENTOWN☑ HAYWARD☑ OAKVILLE☑

BRAKE ADJUSTMENT PROCEDURE
(All with B.F. Goodrich Air Disc Brake)

PURPOSE To provide the field with alternate methods for adjusting these brakes.

RECOMMENDATION Inform users of subject brake that alternate adjustment procedures are available.

INFORMATION Attached to this bulletin is a copy of B.F. Goodrich Service Bulletin HDB-3 which explains two alternate methods of adjusting the full air disc brake. These methods do not require any special tools or gages. The preferred method of adjustment, as given in B.F. Goodrich Maintenance and Overhaul Manual OH275, requires use of adjustment gage ESD-78-HB-1.

Correct brake adjustment is necessary for best performance and life. Inadequate lining clearance can cause overheating, leading to reduced lining and disc life. Excessive clearance will necessitate more frequent adjustment.

END

CIRCULATION

Service Manager	
Shop Foreman	
Night Foreman	
Night Foreman	
Inspector Leadman	
Inspector Leadman	
Inspector Leadman	
Unit Overhaul Room	
Shop Office	

MAGUIRE, VOORHIS & WELLS, P.A.
Attorneys at Law
TWO SOUTH ORANGE PLAZA
2 SOUTH ORANGE AVENUE
ORLANDO, FLORIDA 32801
TELEPHONE (407) 244-1100
FACSIMILE (407) 423-8796

P.O. BOX 633
ORLANDO, FLORIDA 32802

DIRECT DIAL
(407) 244-1165
DIRECT FACSIMILE
(407) 648-4664
INTERNET E-MAIL
CKOLOS @MVW.COM

CHRIS N. KOLOS

July 17, 1997

David M. Lipman, Esq.
599 SW 74th Street
Suite 304
Miami, FL 33143

Re: ***Anne M. Tinker, Executrix of the Estate of Timothy W. Tinker, Deceased vs. A.E. Clevite, et al.*** **Ontario County Index No. 83778.**

Dear Mr. Lipman:

My letter of July 2, 1997 was not quite right. Enclosed please find what truly is the final production to be made by Mack Trucks, Inc. in response to paragraphs 7 and 11 of Plaintiff's Request for Production.

If you have any questions regarding the above, please do not hesitate to contact me.

Sincerely,

Chris N. Kolos

CNK:jo
Enclosures