MACHINE TOOL STANDARD DATA	BUILDER'S NAME GLEASON WORKS ROCHESTER, N.Y., U.S.A.	#116 HYPOID GENERATOR

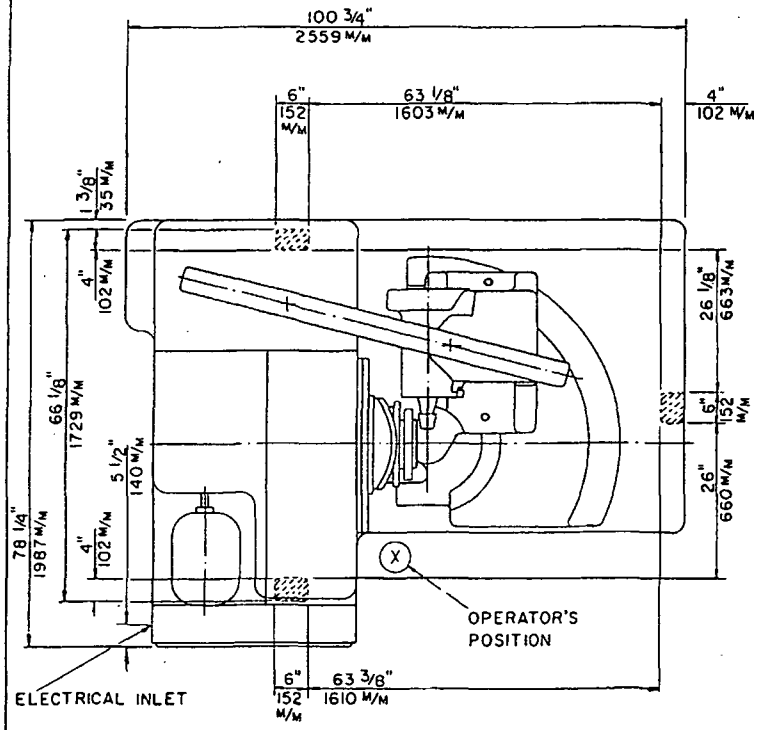

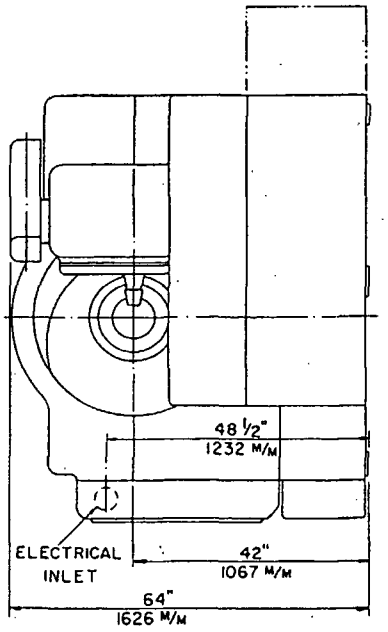

DWG.-G16SC-2720

FOUNDATION PLAN

GLEASON-000245