PLAINTIFF'S EXHIBIT

CAP-833

American Water Works Association
journal

September 1974
Part 2

# A Study of the Problem of Asbestos in Water

by

The American Water Works Association
Research Foundation

CAPCO JEN 0020272

# A Study of the Problem of Asbestos in Water

by
The American Water Works Association
Research Foundation
6666 W. Quincy Ave.
Denver, Colorado 80235

AWWA has accepted this report as representing the opinion of its authors. The authors have given explicit instructions that the report be published using their exact copy; the JOURNAL's editors have complied. The summary represents a reasonable distillate of the body, however, the reader is advised to read the entire report for a rational understanding of the asbestos-from -asbestos-cement-pipe problem.

CAPCO JEN 0020273

## Project History

Research has revealed a recognized occupational health hazard connected with excessive and prolonged inhalation of asbestos dust. A related question has arisen regarding the possible health hazard that may result from the presence of asbestos fibers in water, beverages, food, or fluids used for the administration of drugs. Since considerable amounts of asbestos-cement pipe convey potable water in North America, Europe, and other parts of the world, a question has also been raised with respect to the possible health hazard that may be associated with drinking water which has flowed through asbestos-cement pipe.

The asbestos industry has been investigating the biological effects of asbestos for many years. Additionally, the A/C Pipe Producers Association contracted with the American Water Works Association (AWWA) Research Foundation to study the problem of asbestos in water, and specifically with relation to the use of asbestos-cement pipe.

The objectives of the study were to: (1) assemble all pertinent literature on the biological effects of asbestos; (2) have a committee examine the technical literature and on the basis of present knowledge issue a report answering the question: Does asbestos in water constitute a hazard to health by causing a greater than normal occurrence of gastrointestinal cancer or malignant mesothelioma of the peritoneum or pleura?; and (3) recommend the research required to finally resolve the matter.

### Selection of Study Committee

In the formation of the select committee, considerable attention was given to keeping the group manageably small but invested with competency in the following specialties:

1. An individual familiar with the asbestos problem in air and water.
2. A representative of the U.S. Environmental Protection Agency (EPA) familiar with the problem.
3. A representative of the water supply industry.
4. An expert in analytical methods.
5. A pathologist.
6. An epidemiologist.
7. An international expert knowledgeable in the water, medical and public health fields, and capable of providing input and insight from abroad.

The fact that the committee members accepted the first invitation to serve indicates their interest in the subject.

The following persons served on the study committee:

Marvin Kuschner, M.D.
Dean, School of Medicine
State University of New York
Stony Brook, New York

Roger Lee
Chief, Surveillance & Technical Assistance Section
Program Operations Branch
Water Supply Division
U.S. Environmental Protection Agency

Gordon G. Robeck
Director, Water Supply Research Laboratory
U.S. Environmental Protection Agency

John R. Rossum
Sanitary Engineer
California Water Service Company

Marvin A. Schneiderman, Ph.D.
Associate Director for Field Studies and Statistics, DCCP
U.S. Department of Health, Education, and Welfare
Public Health Service
National Cancer Institute

E. Windle Taylor, C.B.E., M.A., M.D., D.P.H., F.R.C. Path.
Director of Water Examination (retired March 1974)
Metropolitan Water Board
London, England

George W. Wright, M.D.

### Procedure

Two meetings of two days' duration were held. Prior to the first meeting the AWWA Research Foundation staff gathered and analyzed, to the extent possible, all the pertinent literature on the biological effects of asbestos. Copies of papers dealing specifically with asbestos in water, including analytical methods, were sent to the committee members for their study prior to the first meeting. Each committee member also received abstracts of the Lyon Conference papers, the full text of which was available for their examination upon request. The committee members were also instructed to conduct their own search for additional information.

The Lyon Conference, convened by the International Agency for Research on Cancer, was held in Lyon, France on October 5-6, 1972. It involved 137 participants from 20 countries and was called to review all evidence relating asbestos with cancer and other biological effects.

Worthy of mention is the fact that in addition to the technical papers listed in the bibliography, the conference resulted in the issuance of a report of the advisory committee on asbestos cancers. Panels specializing in epidemiology, pathology, and physics and chemistry, met in a separate session after the conference and prepared a report which consisted of two sections.

The first section provided a general review in the form of answers to a number of important general questions about the relation of asbestos to cancers of different body sites while the second section offered recommendations for further research. Question seven in the first section was phrased as follows:

"Is there evidence of an increased risk of cancer resulting from asbestos fibres present in water, beverages, food or in the fluids used for the administration of drugs?"

The answer was as follows:

"Such evidence as there is does not indicate any risk."

The panel on pathology and experimental pathology recommended the following two projects for further experimental study.

1. "The effect of long-term ingestion of fibres of various sizes, shapes, and chemical composition should be studied."
2. "The effects of fibres and associated metals on the metabolism of target organs should be investigated."

Neither of these two projects were rated high in priority.

The bibliography lists the material distributed to each member or available for their study.

The purpose of the first meeting was to orient the committee, exchange information and views, discuss the work reported in the literature, and assign various tasks to be performed by the committee members during the three-month



CAPCO JEN 0020274

interim between meetings.

The second committee meeting concentrated on the health hazards posed by asbestos in water (based on present knowledge of the subject) and recommendations for research needed to answer unresolved questions.

Following the second meeting, several committee members collaborated on the development of the statement of the committee's position and recommendation. This was circulated by mail to all members.

Section III (Summary); section IV (Recommendations); section V (Committee Report); section VI (References); and section VII (Appendices) comprise the COMMITTEE REPORT.

## Bibliography


*General*

BONSER, G. M. & CLAYSON, D. B. Feeding of Blue Asbestos to Rats. Ann. Rprt. 1967 Brit. Empire Cancer Campaign for Res. p. 242.

BURNS, A. F. Chrysolite Fiber Levels in Municipal Water Systems. Johns-Manville Res. Rprt. No. 404-79. (Jun. 4, 1971).

BURNS, A. F.; JAUNARAJS, K. L.; & REIMSCHUSSEL, G. P. Method for the Quantitative Determination of Chrysotile Fiber in Samples from Various Sources. Johns-Manville Res. Rprt. No. 404-67. (Aug. 3, 1970).

CARRIERE, J. E. Behaviour of Asbestos-Cement Pipes in the Soil. Intl. Water Supply Assn. Paper presented at Stockholm, Sweden. (Jun. 15, 1964).

CUNNINGHAM, H. M. & PONTEFRACT, R. Asbestos Fibers in Beverages and Drinking Water. *Nature,* 232:332 (Jul. 30, 1971).

EICK, H. Corrosion in Asbestos Cement and Concrete. Intl. Water Supply Assn. Paper presented at Vienna, Austria (Sep. 1, 1969).

ELMES, P. C. & SIMPSON, M. J. C. Insulation Workers in Belfast. 3. Mortality 1940-66. *Brit. Jour. Indl. Med.,* 28:226 (1971).

ENTERLINE, P.; DECOUFLE, P. & HENDERSON, V. Mortality in Relation to Occupational Exposure in the Asbestos Industry. *Jour. of Occupational Med.,* 14:897 (Dec. 1972).

GOULD, D. A Dangerous Dust. *New Scientist,* (Mar. 9, 1967). p. 453.

HARWOOD, C. F. Asbestos Air Pollution Control. Report prepared for Illinois Inst. for Environ. Quality. (Nov. 1971).

KIVILUOTO, R. & MEURMAN, L. Results of Asbestos Exposure in Finland. Proc. Intl. Conf. on Pneumoconiosis, Johannesburg, South Africa. (Apr.-May 1969).

KRISTIANSEN, H. Extraction of Calcium by Soft Water from Concrete and Asbestos Cement Pipes. Norwegian Inst. for Water Res. (Mar. 1973).

LEWINSOHN, H. C. The Medical Surveillance of Asbestos Workers. (Brit.) *Roy. Soc. Health,* 2:69 (1972).

MANCUSO, T. F. & COULTER, E. J. Methodology in Industrial Health Studies. *Arch. of Environ. Health,* 6:210 (Feb. 1963).

MANCUSO, T. F. & EL-ATTAR, A. A. Carcinogenic Risk and Duration of Employment Among Asbestos Workers. Proc. 2nd Intl. Conf. on Biol. Effects of Asbestos. Dresden, Germany. (Apr. 1968). p. 161.

MEURMAN, L. O.; KIVOLUOTO, R. & HAKAMA, M. Mortality and Morbidity of Employees of Anthophyllite Asbestos in Mines in Finland. Paper presented at Lyon, France conference. (Oct. 2, 1972).

MCDONALD, J. C. Cancer in Chrysotile Mines and Mills, Paper presented at Lyon, France conference. (Oct. 2, 1972).

MCDONALD, J. C., ET AL. Mortality in the Chrysotile Asbestos Mines and Mills of Quebec. *Arch. of Environ. Health,* 22:677 (Jun. 1971).

MCDONALD, J. C., ET AL. Mortality in Chrysotile Producing Industry of Quebec: A Progress Report. Manuscript presented at 4th Pneumo. Conf., Bucharest (1971).

NEWHOUSE, M. L. A Study of the Mortality of Workers in an Asbestos Factory. *Brit. Jour. of Indl. Med.,* 26:294 (1969).

NEWHOUSE, M. L. Cancer Among Workers in the Asbestos Textile Industry. Paper presented at Lyon, France conference (Oct. 2, 1972).

OETTLE, A. G. Tumors of the Alimentary Tract in Mortality from Malignant Neoplasms of the Alimentary Canal in Whites, Coloreds, and Asians in South Africa, 1949-1958. Natl. Cancer Inst. Monograph No. 25. (Jul. 1967).

OLSON, H. L. Does Asbestos in Water Supply Present a Health Hazard? Paper presented at the Conf. of State San. Engrs. at San Francisco, Calif. (May 7, 1973).

PONTEFRACT, R. D. & CUNNINGHAM, H. M. Penetration of Asbestos through the Digestive Tract of Rats. *Nature,* 243:352 (Jun. 8, 1973).

POOLEY, F. D. Mesotheliomas in Relation to Exposure. Paper presented at Lyon, France conference (Oct. 2, 1972).

QUINT, S. M. Transite Pipe Test Line—Determination of Asbestos Fiber in Water. Johns-Manville Res. Rprt. No. 425-T-1360. (Sep. 29, 1971).

RICKARDS, A. L. Estimation of Submicrogram Quantities of Chrysotile Asbestos by Electron Microscopy. *Anal. Chem.,* 45:809 (Apr. 1973).

SARGENT, H. A. Asbestos in Drinking Water. Paper presented at NEWWA Meeting at Northfield, Vt. (May 17, 1973).

SELIKOFF, I. J.; HAMMOND, E. C. & SEIDMAN, H. Cancer Risk of Insulation Workers in the United States. Paper presented at Lyon, France conference (Oct. 2, 1972).

SPEIL, S.; & LEINEWEBER, J. P. Asbestos Minerals in Modern Technology. *Environ. Res.* 2:166 (Apr. 1969).

SWINBURNE, L. M. Report on Research at St. James' Hospital, Leeds. Appendix 4. Included in report from Asbestos Res. Council (Oct. 1970–Oct. 1971).

VIGLIANI, E. C.; GHEZZI, I; & MARANZANA, P. Epidemiological Study of Asbestos Workers in Northern Italy. Proc. 2nd Intl. Conf. on Biol. Effects of Asbestos. Dresden, Germany. (Apr. 1968).

WAGNER, J. C. Personal communication to Dr. P. V. Pelnar. (Oct. 27, 1972).

WESTLAKE, G. E.; SPJUT, H. J. & SMITH, M. N. Penetration of Colonic Mucosa by Asbestos Particles. An Electron Microscopic Study in Rats Fed Asbestos Dust. Laboratory Investigation. *Ofcl. Jour. of the Intl. Academy of Pathology,* 14:2029 (Nov. 1965).

*Asbestos-cement water pipe and human health*

Cancer Research in 1967. *Brit. Med. Jour.,* 7:73 (Jul. 1968).

Does A/C Pipe Constitute a Hazard to Health by Causing an Excessive Occurrence of Gastrointestinal Cancer or Malignant Mesothelioma of the Peritoneum or Pleura?

Eliminating the Hazards of Asbestos Waste. *Munic. Engrg.,* (Brit.) (Feb. 13, 1970).

Exposure to Asbestos. *Nature,* 234:383 (Dec. 17, 1971).

Municipal Water Systems Analysis—Table provided by Johns-Manville Res. Ctr.

*Lyon conference papers*

AHLMAN, K., ET AL. Anthophyllite Mining and Milling as a Cause of Asbestosis

AKEHURST, R. L. The 1969 Asbestos Regulations—Their Economic Appraisal

ALLISON, A. C. Efffects of Asbestos Particles on Macrophages, Mesothelial Cells and Fibroblasts

ASHCROFT, T. & HEPPLESTON, A. G. Quantitation of Asbestos Fibres in Lung Tissue

BECKLAKE, M. R. Assessment of Methods Used in the Studies of the Biological Effects of Asbestos—C. Lung Function

BERRY, G. Hygiene Standards—Theory and Application

BOERSMA, A.; DEGAND, P. & HAVEZ, R. Mesotheliome Diffus. Etapes Biochmiques du Diagnostic. Detection et Dosage de L'Acide Hyaluronique Dans Le Liquide Pleural

BOHLIG, H. & GILSON, J. C. Assessment of Methods Used in the Study of Biological Effects of Asbestos: Radiology

BOHLIG, H. & HAIN, E. Cancers in Relation to Type of Fibre, Dose, Occupation and Duration of Exposure (b) Manufacturing-III Environmental

BUTLER, E. B. & BERRY, A. V. Diffuse Mesotheliomas Diagnostic Criteria Using Exfoliative Cytology.

COOPER, W. C. & MIEDEMA, J. Asbestos in Relation to the Type of Fibre and Dose in the Insulation Industry

CRALLEY, L. J. & SUNDERMAN, F. W. Interactions of Metals and Minerals in Carcinogenesis. Interim Report of Investigations after 22 months

ELMES, P. C. Therapeutic Openings in the Treatment of Mesothelioma

ELMES, P. C. The Natural History of Diffuse Mesothelioma

ENTERLINE, P. E. & WEILL, H. Asbestosis in Asbestos Cement Workers

GIBBS, G. W. & DU TOIT, R. S. J. Environmental Data in Mining

GILSON, J. C. Progress in Epidemiology

GREENBERG, M. The Value of A Cancer Register in the Study of Asbestos Tumours

HAMMOND, E. C. & SELIKOFF, I. J. Relation of Cigarette Smoking to Risk of Death of Asbestos-Associated Disease Among Insulation




CAPCO JEN 0020275

Workers in the US
HARINGTON, J. S. Chemical Factors (Including Trace Elements) as Aetiological Mechanisms
HARRIES, P. G. Assessment of Methods Used in the Studies of the Biological Effects of Asbestos
HINSON, K. F. W., ET AL. Criteria for the Diagnosis and Grading of Asbestosis
HOLMES, S. Criteria for Environmental Data and Bases of Threshold Limit Values—Environmental Data in Industry
HOLMES, S. Sampling Methods
JONES, J. S. P. & SHEERS, G. Pleural Plaques
KANNERSTEIN, M.; CHURG, J. & MAGNER, D. Histochemical Studies in the Diagnosis of Mesothelioma
LANGER, A. M. & POOLEY, F. D. Identification of Single Asbestos Fibers in Human Tissue
LE BOUFFANT, L.; MARTIN, J. C. & DURIF, S. Structure Et Composition Des Plaques Pleurales
LINDELL, K. V. Asbestos and the Community—Industrial Uses
MCCAUGHEY, W. T. E. & OLDHAM, P. D. Diffuse Mesotheliomas: Morbid Anatomical and Histological Diagnostic Criteria, Including Observer Variation in Histological Diagnosis
MCDONALD, J. C. Asbestosis in Chrysotile Mines and Mills
MCDONALD, J. C. Cancer in Chrysotile Mines and Mills
MEURMAN, L. O.; KIVILUOTO, R. & HAKAMA, M. Mortality and Morbidity of Employees of Antohpyllite Asbestos Mines in Finland
MORGAN, A. & CRALLEY, L. J. Chemical Characteristics of Asbestos and Associated Trace Elements
NEWHOUSE, M. L. Cancer Among Workers in the Asbestos Textile Industry
NICHOLSON, W. J. & PUNDSAK, F. L. Asbestos in the Environment
OLDHAM, P. D. Asbestos in Lung Tissue
OLDHAM, P. D. A Trial of Techniques for Counting Asbestos Bodies in Tissue
POOLEY, F. D. Mesothelioma in Relation to Exposure
POOLEY, F. D. Methods for Assessing Asbestos Fibres and Asbestos Bodies in Tissue by Electron Microscopy
RAJAN, K. T. Experimental Methods—Organ Culture
SELIKOFF, I. J.; HAMMOND, E. C. & SEIDMAN, H. Cancer Risk of Insulation Workers in the US
SLUIS-CREMER, G. K. & DU TOIT, R. S. J. Amosite and Crocidolite Mining and Milling as Causes of Asbestosis
SMITHER, W. J. & LEWISOHN, H. C. Asbestosis in Relation to the Type of Fibre, Dose, Occupation and Duration of Exposure in Textile Manufacturing
STANTON, M. F. Some Aetiologic Considerations of Fiber Carcinogenesis
SUZUKI, Y.; KANNERSTEIN, M. & CHURG, J. Electron Microscopy of Normal, Hyperplastic and Neoplastic Mesothelium
TIMBRELL, V. Physical Factors as Aetiological Mechanisms
TIMBRELL, V. Progress in Physics and Chemistry
WAGNER, J. C. & BERRY, G. Considerations of Aetiological Mechanisms and Other Factors-Information Obtained from Animal Experiments
WAGNER, J. C. & BERRY, G. Investigations Using Animals
WAGNER, J. C. Report on Progress Made on the Recommendations of the UICC Working Group on Asbestos and Cancer, 1964.
WARWICK, M., ET AL. Immunology and Asbestosis
WEBSTER, I. Malignancy in Relation to Crocidolite and Amosite
Summary report of the advisory committee on asbestos cancers to the Director of the Intl. Agency for Res. on Cancer, a division of the World Health Org., Lyon, France. (Oct. 5, 1973)
Recommendations for further research by epidemiology, pathology and experimental pathology, and physics and chemistry panels
*Abstracts of papers*
CURRY, M. G. & GIGLIOTTI, G. M. Cycling and Control of Metals. Proc. of an Environ. Resources Conf., Columbus, Ohio. Oct. 31-Nov. 2, 1972. Report No. NERC-C-73-1 (Feb. 1973).
SMITH, R. W., ET AL. Aqueous Surface Chem. of Asbestos Minerals. Chemical and Metallurgical Engrg. Dept., California State Univ. and Colleges, Univ. of Nevada, School of Mines, Reno, Nev. Smithsonian Science Info. Exchange Notice of Res. Proj. supported by HEW, PHS, Health Service Mental Health Admin., Natl. Inst. of Occupational Safety and Health (Sep. 1971-Aug. 1972).



CAPCO JEN 0020276

# DOES THE USE OF ASBESTOS-CEMENT PIPE FOR POTABLE WATER SYSTEMS CONSTITUTE A HEALTH HAZARD?

*A Committee Report*
*by*

MARVIN KUSCHNER, M.D.
ROGER LEE
GORDON G. ROBECK
JOHN R. ROSSUM
MARVIN A. SCHNEIDERMAN, PH.D.
E. WINDLE TAYLOR, C.B.E., M.A., M.D., D.P.H., F.R.C. PATH.
GEORGE W. WRIGHT, M.D. (CHAIRMAN)

Prepared for

The American Water Works Association
Research Foundation
6666 W. Quincy Avenue
Denver, Colorado 80235



CAPCO JEN 0020277

## Summary

Does the use of asbestos-cement pipe for potable water systems constitute a health hazard?

This question has been raised because of the possibility that asbestos fibers might be released by mechanical action during construction or subsequent tapping of the system, or by erosion or by leaching and thus be ingested directly or indirectly through water drunk or through food prepared from water flowing through such systems. Asbestos-cement pipe has been in use for potable water systems for 50 years in Europe and almost 40 years in the United States of America without overt evidence that it poses a hazard to health. Populations using these systems have not been studied with techniques adequate to reveal small differences of health experience when compared to populations using other water distribution systems. Moreover, the lag time for biological effects such as cancer may be longer than the period spanned by the use of asbestos-cement pipe. For these reasons, a direct evaluation of the question on epidemiologic grounds is not possible at this time. Nevertheless, it is possible to consider the matter in a useful way by exploration of the following questions:

A. *Is there valid evidence that ingested asbestos is harmful?*

Asbestos can cause granulomatous and fibrotic reactions in the lungs but there is no evidence that it does so in the gastrointestinal tract. There is sufficient evidence to support the presumption that occupational exposure to asbestos poses an unusual risk of developing gastro-intestinal cancer. This is assumed to be caused by the asbestos ingested as a result of occupational exposure. An excess occurrence of peritoneal mesothelioma has been reported in most occupational groups exposed to airborne asbestos. Although it may be so, it is not certain that this is caused by ingested asbestos.

B. *What is known about the determinants of the biological effects of ingesting asbestos?*

There is evidence that whatever gastro-intestinal carcinogenic effect is demonstrable, it is related to dose but is not related to variety of fiber, and whether or not it is related to fiber size is unknown. If ingested asbestos plays a role in the development of mesothelioma of the peritoneum it can be expected to be dose related and probably related to the dose of those fibers longer than ten micrometers and thinner than three micrometers. It is unlikely to be related to the chemical make-up of the different varieties of fiber.

C. *What is the evidence that asbestos is released from asbestos-cement pipe by mechanical handling during installation, tapping for new users, or by erosion or by leaching as water flows through the system? If this does occur, what are the amounts of the released fiber, its size and pattern of build-up or persistence?*

The general prevalence of asbestos in soil results in its presence in most waters of lake, river, and well origin, and in distribution systems whether fabricated of asbestos-cement or other materials. Additional asbestos fibers may be contributed to the water flow through transfer from the asbestos-cement pipe wall or deposit in the pipe during construction or repair of the distribution system. At present the available data are inadequate to describe the quantitative or qualitative contribution made by asbestos-cement pipe alone with respect to the amount, size, and persistence of the asbestos fibers found in potable water distribution systems.

D. *If there is evidence to indicate that ingested asbestos is harmful, what inferences can be drawn from the circumstances of such exposure that are applicable or meaningful with respect to the exposure that might be experienced due to the domestic use of asbestos-cement pipe?*

The total amount of asbestos ingested by occupational groups spans a range that, even at its lowest level, is many times that which is likely to be experienced by the public use of water from asbestos-cement pipe systems. Since the occupational risk of excess gastro-intestinal cancer is dose-related, the slight or perhaps no risk posed by low level occupational exposure makes it even less likely that the exposure from ingestion of public water would pose a gastro-intestinal cancer hazard.

Asbestos-cement pipe systems have serviced large populations for 40 or more years in Europe and the United States. No apparent increase in peritoneal mesotheliomas among the public has occurred during this period despite the fact that this tumor has been the focus of great interest among pathologists for the past ten years.

Asbestos fibers shorter than 20 micrometers in length appear to have little or no capacity to induce mesotheliomata in experimental animals. To the degree that fibers longer than this are absent or scant in the water of asbestos-cement pipe systems the likelihood that such systems would pose a mesothelioma risk would be small.

No firm evidence shows that the proper use of asbestos-cement pipe poses a hazard to health by reason of ingestion of asbestos fibers. Calculations comparing the probable ingestion exposure in occupational groups to that likely to occur as a result of ingestion of potable water from asbestos-cement pipe systems suggests that the probability of risk to health from the use of such systems is small — approaching zero. A group of scientists at the Lyon Conference on Biological Effects of Asbestos, who looked at the possible hazard posed by asbestos in potable water, reached a similar conclusion. Additional evidence, currently not available, to show more directly that the use of asbestos-cement pipe is without risk, is desirable. Appendix F lists proposed areas of research directed toward achieving that goal.

## Recommendations

Of primary importance is the development of a standard analytical procedure to identify and quantify asbestos fibers by type and size as they actually exist in water. This ability is essential for the equally important study of pipe systems of various materials to determine the effect of the asbestos content of the soil in which the pipes are laid and the effect of the pipe itself (asbestos-cement) upon the asbestos content of the water traversing the system.

In addition, necessary research should include epidemiological studies of human population groups exposed to asbestos-cement pipe systems, and animal studies to examine the health aspects of asbestos fiber and to explore possible carcinogenic effects.

Appendix F provides a more detailed list of suggested research projects.

## Committee Report

**Introduction.** The question we have been asked is: Does the use of asbestos-cement pipe for potable water systems constitute a health hazard?

This question has been raised because of the possibility that asbestos fibers might be released by mechanical action during construction or subsequent tapping of the system, or by erosion, or by leaching, and thus be ingested directly or indirectly by water drunk, or through food prepared from water flowing



CAPCO JEN 0020278

through such systems.* Asbestos-cement pipe has been in use for potable water systems for 50 years in Europe and almost 40 years in the United States of America without overt evidence that it poses a hazard to health. Populations using these systems have not been studied with techniques adequate to reveal small differences of health experience when compared to populations using other water distribution systems. Moreover, the lag time for biological effects such as cancer may be longer than the period spanned by the use of asbestos-cement pipe. For these reasons, a direct evaluation of the question on epidemiologic grounds is not possible at this time. Nevertheless, it is possible to consider the matter in a useful way by exploration of the following questions:

A. Is there valid evidence that ingested asbestos is harmful?

B. What is known about the determinants of the biological effects of ingesting asbestos?

C. What is the evidence that asbestos is released from asbestos-cement pipe by mechanical handling during installation, tapping for new users, by erosion, or by leaching as water flows through the system? If this does occur, what amounts of fiber are released and what is their size and pattern of build-up or persistence?

D. If the evidence indicates that ingested asbestos is harmful, what inferences can be drawn from the circumstances of such exposure that are applicable or meaningful with respect to the exposure that might be experienced due to the domestic use of asbestos-cement pipe?

A. *Is there valid evidence that ingested asbestos is harmful?*

Data relating human exposure to asbestos in the environment to subsequent health effects are limited to occupational and para-occupational exposure. Such exposures constitute a combination of inhalation and ingestion, since the bulk of the fibers deposited in the regions distal to the pharynx by inhalation are cleared from the lungs by being brought up into the back of the throat via the mucous removing apparatus and then swallowed or expectorated. In addition, those fibers deposited in the back of the nose and the pharynx are likewise cleared into the throat and then swallowed or expectorated. Moreover, for most occupationally exposed groups, facilities for eating and washing were not always available, and direct contamination of food consumed on the job was common. Although quantitative aspects of exposure via the ingestion route in man have not been examined, on the basis of studies of pulmonary clearance of particles it is undoubtedly substantial.

Asbestos can cause granulomatous and fibrotic reactions in the lungs, but there is no evidence that it does so in the gastro-intestinal tract. Therefore this manifestation was not further considered. An excess occurrence of cancer of the lung, pleura and peritoneum, and also the gastro-intestinal tract, has been reported in association with occupational and para-occupational exposure of humans to asbestos. Since it is logical to believe that of these manifestations an excess of gastro-intestinal and peritoneal cancer might be associated with asbestos entering the body via the route of ingestion, these two classes of cancer were considered.

Several recent reports have shown a higher incidence of tumors of the gastro-intestinal tract in populations exposed occupationally to asbestos than in a comparable age group of the general public not thus exposed.[1,2,3] Another study, comparing an occupational group heavily exposed to asbestos to several groups who had experienced lesser exposure in the same occupation, has shown a gastro-intestinal tumor incidence in the most heavily exposed double that of the lesser exposed.[4,5] In none of these studies has the author concluded that the data establish unequivocally that employment in asbestos-producing or -using occupations poses a higher than usual risk of developing gastro-intestinal cancer. Nevertheless, the data, when taken in aggregate, appear to establish the presumption that such a relationship does exist. In each of these occupational groups the exposure has been by both inhalation and ingestion, but it would appear reasonable to assume that whatever effect on gastro-intestinal cancer rate exists, it is due to ingestion, since the ingested fibers would have direct access to the cells lining the gastro-intestinal system.

An excess occurrence of peritoneal (abdominal) mesothelioma has been reported in several groups occupationally and para-occupationally exposed to combined inhalation and ingestion of asbestos.[3,5,6,7,8,9,10] In contrast to the gastro-intestinal cancers where the ingested fibers come into direct and immediate contact with the inner surface of the gut wall, the route of access of fibers to the mesothelial cells of the peritoneum is not clearly understood. Channels through which fibers could go from the lung to the peritoneum without entering the gastro-intestinal tract do exist. Moreover, the intestinal wall may provide a barrier to the migration of asbestos fibers of critical size from the lumen of the gut to the mesothelial cells covering the outer surface of the gastro-intestinal tract. For these reasons, the excess of peritoneal mesotheliomas is less clearly the result of ingestion, and may be the result solely of inhalation.

B. *What is known about the determinants of the effects of ingested asbestos?*

The biological effect of virtually every agent is related to its specific nature, dose, and host sensitivity or reactivity. Data relating the effects of asbestos to host sensitivity or reactivity are scant and not applicable to the question being considered. Some data are available relating the dose and specific nature of the fibers to the biological effects of asbestos. With respect to the specific nature of asbestos fibers, one should note that the varieties of asbestos have different chemical compositions and shapes. Some varieties have more iron and less magnesium than others, and some have straight, stiff fibers in contrast to others that are more flexible and curved or curly. Moreover, the airborne dust to which humans are exposed contains asbestos fibers that vary in length from hundreds to less than one micrometer, and in diameter from ten or more to 0.04 micrometers.

Studies that have examined the relationship between the intensity and duration of occupational exposure to asbestos and the incidence of gastro-intestinal cancer have revealed data that can be interpreted as demonstrating a dose effect, the risk decreasing with diminishing dose.[1,5] Also see Appendix E. There are data[1] showing a greater risk of both lung and gastro-intestinal cancer in maintenance than in production workers even though their total exposures were thought to be similar. Among several other possible explanations for this observation, the greater likelihood of high intermittent exposure of maintenance workers may have played a role. Approximately the same order of excess of gastro-intestinal cancer has been reported in those occupations where chrysotile, amosite, or a mixture of chrysotile and crocidolite, have been used.[1,2,5,11] Thus, there does not appear to be an effect related

*While the use of asbestos-cement pipe for sewage or other water systems might also be considered, it seems logical to believe that such systems would have a lesser and more indirect effect and that consideration should first be directed to potable water systems.



CAPCO JEN 0020279

to different chemical compositions or shapes of fibers. Airborne asbestos in all occupational and para-occupational exposures contains fibers of all sizes as to diameter and length. This makes it impossible to study the effect of various sizes of fiber by human epidemiology. Feeding experiments with animals using asbestos fibers of mixed lengths and diameters have not produced a gastro-intestinal carcinogenic response.[12,13,14,15,16] Thus, no animal experiments have been conducted thus far to examine the effects of various sizes of fiber on gastro-intestinal carcinogenesis.

To summarize, there is evidence that whatever gastro-intestinal carcinogenic effect is demonstrable, it is related to dose and perhaps to pattern of dose, but is not related to variety of fiber used in asbestos-cement pipe. Whether or not it is related to fiber size is unknown.

With respect to mesothelioma, the only studies relating dose or severity of occupational exposure to occurrence of mesothelioma are those of Newhouse. They show a dose relationship with the risk lessening as the dose decreases.[8,21] Animal experiments support the dose relationship premise.[22,23] Unfortunately, the studies by Newhouse do not express exposure in numerical terms. Available evidence also suggests that an excess of mesothelioma occurs in occupationally exposed groups at doses below those that produce pulmonary fibrosis and probably below that necessary to cause an excess of bronchogenic cancer.[3,5,8,10] Evidence of an excess of mesothelioma resulting from para-occupational exposure has been presented with the assumption that in some instances these exposures have been extremely slight. The numerical intensity of exposure in these non-occupational cases has not been demonstrated. However, on the basis of available information, it appears that many of these exposures have been substantial, though perhaps brief.[10,11,17,18,20] It is difficult to evaluate the validity of a cause-and-effect relationship between casual and presumably slight exposures of the general public to inhaled asbestos and the development of mesothelioma. Such a relationship has been sought by looking for exposure to asbestos in the life experience of cases of mesothelioma collected from hospital or non-occupationally derived records.[6,7,9,10,19] In view of the wide-spread use of asbestos, or asbestos-containing products, now and during the past 50 years, frequent slight exposure of the general public must be common. The importance of these casual exposures should be evaluated with caution.

The two asbestos components of asbestos-cement pipe, chrysotile and crocidolite, have been shown to be associated with excess development of peritoneal mesothelioma. The experience in pure chrysotile exposure appears to be less severe than that of mixed varieties.[4,18] Unfortunately, there are no numerical dose data for the latter exposures. Therefore, it is unsafe to conclude that this difference is a true varietal effect in terms of chemical or physical character. Both varieties of asbestos produce tumors of the pleura in the experimental animal model.

Since humans are exposed to all sizes of asbestos fiber, it is not possible to examine the effect of varying fiber size by human epidemiologic studies. Several investigators have produced cancer of the pleura by introducing asbestos, glass, or aluminum-oxide fibers directly into the pleura or peritoneal space of experimental animals. Some disagreement exists as to whether these tumors are the specific counterpart of mesothelioma in humans. Chrysotile, amosite, and crocidolite, as well as glass and aluminum-oxide fibers will produce these experimental tumors. This suggests that the tumorogenic effect is not related specifically to the chemical composition of the fibers.[22,24,25] These animal studies have indicated a striking effect of size of fiber on this type of carcinogenesis. One can conclude from such studies that fibers thinner than three and longer than 20 micrometers are more carcinogenic than fibers of greater diameter, irrespective of length, or those shorter than 20 micrometers, irrespective of diameter.[26] Whether these findings are applicable to the effects of ingested asbestos has not been demonstrated by animal experimentation, but they do suggest that if ingestion of asbestos plays a role in the development of peritoneal mesothelioma, it might be expected that the size of the fibers capable of penetrating the gut wall and reaching the mesothelial cells would be of importance.

To summarize, if ingested asbestos plays a role in the development of mesothelioma of the peritoneum, it can be expected to be dose related, and, on a conservative basis; probably related to the dose of those fibers longer than ten micrometers and thinner than three micrometers. It is unlikely to be related to the chemical make-up of the different varieties of fibers.

C. *Is asbestos released from asbestos-cement pipe during proper use? If it is, what are the amounts and sizes of the fibers and what are the patterns of build-up and persistence?*

Answers to these questions are dependent on methods for collecting samples, identifying the specific variety of asbestos in the pipe as distinct from other kinds of co-existing fibers, and measuring the asbestos fiber size and amount without altering the original state of the fibers. This task, even on a research basis, is extremely difficult and has been accomplished only in some respects to date (see Appendix B). There are no data delineating temporal variations such as might result from repair or tapping of new lines or services.

There are scant quantitative data for chrysotile asbestos in water expressed in micrograms per unit of volume. Fibers identified as asbestos are found in the primary water source (lake, river or well) of most systems thus far examined. See Appendix D-1,3. This is not surprising in view of the ubiquity of asbestos of one or another variety in the soil of the United States through which source waters flow, or in which they lie; and the consequent opportunity for leaching of fibers from the soil into these waters. Appendix C shows the distribution of asbestos on or close to the surface throughout the United States. There is also the opportunity for some of the asbestos fibers freed into the atmosphere by wind erosion, by earth disturbance, and by escape of fibers from the use of commercial articles containing asbestos to be washed by surface-water drainage into the primary sources. Thus, one can anticipate that appreciable amounts of asbestos fiber exist in the water as it enters the distribution system.

It is necessary to determine the amount of asbestos in potable water and the increment added by the distribution system. It is also necessary to know whether an observed increment is caused by fibers being removed from asbestos-cement pipe, or by contamination from the soil surrounding the pipe, or left in the pipe during construction or repair of the system. Limited studies of water circulated through a closed loop of asbestos-cement pipe, not buried in the soil, reveal that asbestos fibers can be transferred from the pipe wall to the water. See Appendix D-2. The mechanisms governing this release and its persistence have not been established.

Three asbestos-cement pipe systems in use for a substantial period of time have been sampled for their asbestos fiber content. The data on asbestos content of the water from the



CAPCO JEN 0020280

system reported by Sargent were obtained by examining the samples with a light microscope only.[27] Subsequent examination of these samples using the electron microscope, which permits recognition of chrysotile asbestos, revealed that a large proportion of the fibers originally reported as being asbestos were in fact not.[28] This experience exemplifies the difficulties inherent in measuring the asbestos content of water.

The other two asbestos-cement pipe systems were analyzed by a technique (See Appendix B and D) permitting electron microscope recognition and quantification of chrysotile asbestos. In one of these the source and pipe system lay in serpentine soil. Preliminary data place the quantity of asbestos in tap water in this system at 0.119 microgram per liter. The source water contained 0.045 microgram per liter. The increment amounted to 0.074 microgram per liter.

In the second system the well and asbestos-cement pipe lay in soil comparatively free from serpentine rock. The tap water contained 0.01 microgram per liter and the source water 0.0061. The increment amounted to 0.0040 microgram per liter.

Several points should be made with regard to these studies. Appendix B indicates the major difficulties posed by the methodology used. The quantitative aspects are expressed for chrysotile only. Chrysotile usually comprises 80% or more of the asbestos used in asbestos-cement pipe. The confidence limits with present techniques at these minute amounts may be as much as one order of magnitude. Since the original size of the fibers is altered by the "rub-out technique" we have no knowledge of the amount of fiber in the water as it is ingested by humans according to length and diameter.

Multiple high-volume sampling also creates some difficulties, and good data with respect to the effect of length of pipe traversed, velocity of flow, and temporal effects do not exist. Nevertheless, these studies afford a preliminary estimate of the likely exposure by way of ingestion of tap water for comparison with the exposure by ingestion experienced by occupational groups. They do not provide information on the amount of fibers of various sizes. One should also note that if it could be established that the make-up of the pipe, the aggressiveness of the water, and factors such as velocity of flow and age of pipe were essentially the same in the two systems examined, then other explanations for the difference in asbestos content of the water must be found. Serpentine soil contains asbestos fibers. Particles of such soil entering the pipe during construction, especially those lodging in the crevices of joints, could slowly and over a long period of time contaminate the water. At present there are not adequate data for a description of the quantitative or qualitative role of asbestos-cement pipe as a contributor to asbestos fiber found in potable water distribution systems. However, the available data do indicate what additional studies need to be made and also afford a first approximation of the magnitude of the possible health hazard.

D. *If the evidence indicates that ingested asbestos is harmful, what inferences can be drawn from the circumstances of such exposure that are applicable or meaningful with respect to the exposure that might be experienced due to the domestic use of asbestos-cement pipe?*

With respect to an excess of gastro-intestinal cancer, such evidence as there is does not suggest that the variety of asbestos plays a role and thus the kinds of asbestos used in asbestos-cement pipe might be implicated. There is no evidence in man or animals about the influence of the size of fibers ingested on the development of gastro-intestinal carcinogenesis. Hence, until additional information is available, it must be assumed that the size of fibers existing in potable water could play a role.

Evidence derived from occupational groups indicates a direct dose relationship between environmental exposure and the risk of excess gastro-intestinal cancer. The amount ingested can be expected to be directly related to the environmental exposure. The amount of asbestos in water delivered through asbestos-cement pipe and other pipe systems is expressed in terms of micrograms per liter. Using this kind of data, one can compare the quantity of asbestos likely to be ingested from water to those ingested by the occupationally-exposed populations experiencing an excess of gastro-intestinal cancer, thus placing these two categories of populations in perspective.

As shown in Appendix A, one can calculate the approximate amounts of asbestos ingested by the occupationally-exposed populations of the two groups where an excess of gastro-intestinal cancer and exposure data have been reported. In the McDonald group this ranged from 2.1 to 168.0 grams, and in the Enterline group from 42 to 336 grams during the working lifetime of the men studied. For comparison, based upon a water consumption of two liters per day, one can calculate that the total amount ingested in 60 years from the water system with the highest concentration of fibers would be 0.07 gram (See Appendix D-3, Memphis, not asbestos-cement pipe, filtered). The higher of the two asbestos-cement pipe systems studied (See Appendix D,Malvern) would provide a total of 0.005 gram ingested in 60 years. That the amount of asbestos ingested from asbestos-cement pipe systems over a 60-year period would approach the least of the occupational exposures is unlikely. Moreover, the dose response observed in the occupationally-exposed populations suggests that at the lower levels of exposure there was slight or perhaps no risk of excess gastro-intestinal cancer.[1,4,5] Also see Appendix E. Thus, there appears to be even less probability that the ingestion of asbestos from the higher of the two potable asbestos-cement pipe systems would reach the risk level for gastro-intestinal cancer of the occupationally-exposed groups.

With respect to mesothelioma of the peritoneum, the occupational and para-occupational exposure is by both inhalation and ingestion. Neither route provides direct exposure of the target cells. The fibers reaching the pleura or peritoneum do so by indirect routes. It is possible, therefore, that peritoneal mesothelioma is not caused by ingestion of fibers and thus not a matter for our consideration. Both chrysotile and crocidolite are associated with an excess of peritoneal mesothelioma in occupationally-exposed populations. Hence, fibers released from asbestos-cement pipe would have this potential. Mesothelioma is dose related in occupational exposures and also the animal model. There are no numerical data defining the hazardous level of this dose relationship in humans. As Appendix A shows, the range of exposure by ingestion in those occupationally exposed is higher than that which is apt to be provided by potable water. Since animal studies indicate that the longer fibers are the potent initiators of mesothelioma, the dose should be looked at in terms of categories as to length of fibers in potable water. We do not know the proportion of long to short fibers in their natural state in potable water and therefore cannot make the desired comparison at this time. If all or most of the fibers released by asbestos-cement pipe are less than ten micrometers long, especially if the quantity of those that are longer is small, the



CAPCO JEN 0020281

likelihood that asbestos-cement pipe poses a mesothelioma risk would be small. As stated at the outset, asbestos-cement pipe systems have serviced large populations for 40 or more years in Europe and the United States. No apparent increase in peritoneal mesotheliomas among the public has occurred during this period despite the fact that this tumor has been the focus of great interest among pathologists for the past ten years.

**Conclusions.** No firm evidence shows that the proper use of asbestos-cement pipe poses a hazard to health by reason of ingestion of asbestos fibers. Calculations comparing the probable ingestion exposure in occupational groups to that likely to occur as a result of ingestion of potable water from asbestos-cement pipe systems suggests that the probability of risk to health from the use of such systems is small - approaching zero. A group of scientists at the Lyon Conference on Biological Effects of Asbestos, who looked at the possible hazard posed by asbestos in potable water, reached a similar conclusion.[32] Additional evidence, currently not available, to show more directly that the use of asbestos-cement pipe is without risk, is desirable. Appendix F lists proposed areas of research directed toward achieving that goal. Most will require several years time and the commitment of substantial money and manpower. Some require techniques not currently developed.

## References


1. ENTERLINE, P., ET AL. Mortality in Relation to Occupational Exposure in the Asbestos Industry. *Jour. Occupational Med.*, 14:12:897 (Dec. 1972).
2. ELMES, P. C. & SIMPSON, M. G. Insulation Workers in Belfast. 3. Mortality 1940-66. *Brit. Jour. Indl. Med.*, 28:226 (1971).
3. SELIKOFF, I. J., ET AL. Cancer Risk of Insulation Workers in the United States, Paper No. 35. Conf. on the Biol. Effects of Asbestos, Intl. Agency for Res. on Cancer, Lyon, France (Oct. 1972).
4. MCDONALD, J. C., ET AL. Mortality in the Chrysotile Asbestos Mines and Mills of Quebec. *Arch. Environ. Health*, 22:677 (1971).
5. MCDONALD, J. C. Cancer in Chrysotile Mines and Mills, Paper No. 29. Conf. on the Biol. Effects of Asbestos, Intl. Agency for Res. on Cancer, Lyon, France (Oct. 1972).
6. WEBSTER, I. Malignancy in Relation to Crocidolite and Amosite, Paper No. 30. Conf. on the Biol. Effects of Asbestos, Intl. Agency for Res. on Cancer, Lyon, France (Oct. 1972).
7. WEBSTER, I. Asbestos and Malignancy. *South African Med. Jour.*, 47:165 (1973).
8. NEWHOUSE, M. L. Cancer Among Workers in the Asbestos Textile Industry, Paper No. 32. Conf. on the Biol. Effects of Asbestos, Intl. Agency for Res. on Cancer, Lyon, France (Oct. 1972).
9. MCDONALD, A. & MCDONALD, J. C. Epidemiologic Surveillance of Mesothelioma in Canada. *CMA Jour.*, 109:359 (1973).
10. WAGNER, J. C., ET AL. Epidemiology of Asbestos Cancers. *Brit. Med. Bull.*, 19:71 (1971).
11. SELIKOFF, I. J., ET AL. Carcinogenicity of Amosite Asbestos. *Arch. Environ. Health*, 25:183 (1972).
12. SMITH, W. E. L., ET AL. Tests for Carcinogenicity of Asbestos, *Ann. N.Y. Acad. Sci.*, 132:456 (1965).
13. SMITH, W. E. Asbestos, Talc and Nitrites in Relation to Gastric Cancer. *Amer. Indl. Hyg. Assoc. Jour.*, 34:227 (1973).
14. BONSER, G. M. & CLAYSON, D. B. Feeding of Blue Asbestos to Rats, 45th Ann. Rprt., Brit. Empire Cancer Campaign for Res.-1967. (1968) p. 242.
15. SWINBURNE, L. M. The Ingestion of Asbestos by Rats. Personal communication to Bu. of Food, FDA. Reported in the Fed. Rgtr., 38:188:27077 (Sep. 1973).
16. GROSS, P. Personal communications to J. F. Knox and G. W. Wright.
17. WRIGHT, G. W. Personal observations of environmental conditions in paraoccupational exposures.
18. GILSON, J. C. Asbestos Cancer: Past and Future Hazards. *Proc. Roy. Soc. Med.*, 66:395 (1973).
19. NEWHOUSE, M. L. & THOMPSON, H. Mesothelioma of Pleura and Peritoneum Following Exposure to Asbestos in the London Area. *Brit. Jour. Indl. Med.*, 22:261 (1965).
20. WAGNER, J. C., ET AL. Diffuse Pleural Mesothelioma and Asbestos Exposure in the Northwest Cape Province. *Brit. Jour. Indl. Med.*, 17:260 (1960).
21. NEWHOUSE, M. L. Asbestos in the Workplace and the Community. *Ann. Occupational Hyg.*, 16:97 (1973).
22. WAGNER, J. C., ET AL. Mesotheliomata in Rats after Innoculation with Asbestos and Other Materials. *Brit. Jour. Cancer*, 28:173 (1973).
23. SMITH, W. E., ET AL. Tests for Threshold Levels of Carcinogenicity of Asbestos, Internationale Konferenz ueber die Biologischen Wirkungen des Asbestos. Dresden, E. Germany (1968) p. 240.
24. STANTON, M. F. & WRENCH, C. Mechanisms of Mesothelioma Induction With Asbestos and Fibrous Glass. *Jour. Natl. Cancer Inst.*, 48:797 (1972).
25. STANTON, M. F. Some Aetiologic Considerations of Fiber Carcinogenesis, Paper No. 43A. Conf. on the Biol. Effects of Asbestos, Intl. Agency for Res. on Cancer, Lyon, France (Oct. 1972).
26. STANTON, M. F. Fiber Carcinogenesis: Is Asbestos the Only Hazard? editorial. *Jour. Natl. Cancer Inst.*, 52:633 (1974).
27. SARGENT, H. E. Asbestos in Drinking Water. Presented NEWWA Meeting, Northfield, Vt. (May 17, 1973).
28. ROBECK, G. G. Personal communication.
29. LYNCH, J. R., ET AL. The Interrelationship of Selected Asbestos Exposure Indices. *Amer. Ind. Hyg. Assn. Jour.*, 31:598:604 (1970).
30. GIBBS, G. W. Personal communication.
31. MCDONALD, J. C. Asbestos in Chrysotile Mines and Mills, Paper No. 23. Conf. on the Biol. Effects of Asbestos, Intl. Agency for Res. on Cancer, Lyon, France (Oct. 1972).
32. Report of the advisory committee on asbestos cancers to the Intl. Agency for Res. on Cancer. *Ann. Occupational Hyg.*, 16:9 (1973).




CAPCO JEN 0020282

## Appendix A

The approximote amount of fiber ingested by reason of inhalation in occupational settings can be estimated retrospectively if the intensity and duration of airborne exposure is known. The occupational group reported by McDonald et al. had an airborne exposure spanning the range of 10 to 800 million particles per cubic foot (mppcf) years.[4,5] Assuming a duration of exposure of 40 years for a person acquiring a total of ten mppcf years, his exposure would have been to an environment containing 0.24 mppcf each day. McDonald estimates that in the general exposures of his study population one mppcf of airborne dust was equivalent to two asbestos fibers per cubic centimeter (cc) large enough to be seen by the light microscope.[31] Thus, the exposure at ten mppcf years was 0.5 fiber per cc for 40 years. It is reasonable to estimate that during work in the occupations of his study group, the respiratory volume, averaged during a seven-hour period of work per day, would be at the rate of 16 liters per minute. Doing this seven hours a day, five days a week, 50 weeks a year for 40 years would produce a total inhaled volume of $6.72 \times 10^{10}$ cc. If each two cc contained one fiber, this would amount to $3.36 \times 10^{10}$ fibers being inhaled in 40 years.In occupational circumstances the fibers that are counted by the light microscope can be estimated to average $1 \times 20$ micrometers. Based on the weight of this size of fiber, it is estimated that 1.35 grams of asbestos fiber would be inhaled as the equivalent of an exposure of ten mppcf years. Further, estimating that 80% of this size of fiber is deposited and subsequently cleared from the respiratory system to be swallowed, a total of 1.1 grams might be ingested at this level of exposure.

Lynch has shown that in manufacturing operations there are 25 to 100 times as many thin fibers requiring the electron microscope for recognition as there are of those large enough to be seen by the light microscope.[29] Gibbs reports similar circumstances for the type of exposure reported by McDonald et al. Using the lower value of 25, and assuming a fiber of $0.5 \times 5.0$ micrometers, a lung deposition of 50% of this size fiber, and clearance with subsequent swallowing of 90%, calculations show that the ingestion by this occupational group at the ten mppcf level was an additional 1.0 gram of asbestos fiber. Thus, a total of 2.1 grams of asbestos would be ingested at this level of exposure.

Since the group under study by McDonald et al covered an exposure range of 10 to 800 mppcf years, the range of ingestion during their working life was approximately 2.1 to 168 grams of asbestos of all sizes, and 1 to 80 grams for the size of fiber measuring $0.5 \times 5.0$ micrometers.

Based on Lynch's studies, the group examined by Enterline can be expected to have had a fiber to particle ratio of between two and six fibers per cc for each one mppcf. Choosing four fibers per cc for the conversion ratio, and using the same calculations as above for McDonald's study group, the numbers are simply doubled in order to arrive at the ingestion exposure for the Enterline group. The range of exposure for this group was 100 to 800 mppcf years. Therefore, the ingestion exposure for the Enterline group ranged between 42 and 336 grams for both the light-microscope and electron-microscope sizes of asbestos fiber over the 40-year period of work, and from 20 to 160 grams for the fibers $0.5 \times 5.0$ micrometers which would be seen only by using an electron microscope.

A precise estimate of the ingestion exposure is not possible in these retrospective studies. The estimates arrived at are meant only to provide a frame of reference for comparison of the occupational exposure to that which might occur in the general public by reason of ingestion from potable water supplies.



CAPCO JEN 0020283

## Appendix B

The determination of the asbestos fiber concentration in water supplies is a very difficult task. Some of the reasons for this are:

1. The concentration of asbestos fiber in water is generally very low, i.e. in the parts-per-billion range.
2. There is no convenient chemical method which can be considered because the elements present in all forms of asbestos fiber are common to all rock-forming minerals.
3. There are no reliable methods to concentrate or separate the asbestos fiber from the other inorganic solids present in the water.
4. The size of the fiber is, in most instances, below the limits of resolution of the optical microscope.

Faced with these limitations, the analyst must resort to electron microscopic techniques for the identification and quantification of the asbestos fiber in water.

The exact details of the electron microscopic methods which are used for the analysis of asbestos fiber will depend to a great extent on the nature of the information desired. Basically there are three major steps involved:

1. Removal of the solids from the water by filtration on a membrane filter.
2. Transfer of the captured solids to a suitable mount for examination with the electron microscope.
3. Examination of the sample, including counting and measuring the asbestos fibers which are found.

The majority of information which has been obtained on the asbestos-fiber content of waters was gathered by a method designed to determine the *mass* (or weight) of chrysotile present. This method was developed to ascertain the levels of chrysotile fibers in source waters, and also to obtain information on the possible addition of fiber by asbestos-cement pipe. In somewhat more detail, this method involves a considerable degree of mechanical work on the sample prior to examination by the electron microscope.

After the suspended solids are collected on the membrane filter, the entire sample is ashed (at 400° C) to destroy the filter and any organic solids present in the water. An aliquot of the ashed inorganic solids is then rubbed out, or ground, in a dilute solution of nitrocellulose. This latter step reduces the size of the particles of residue which might hide extremely small asbestos fibers. The final result is an even dispersion of the inorganic residue in a film which is suitable for transfer to a standard electron-microscope grid.

The sample is examined under the electron microscope, and photographs taken of representative areas. Under these conditions it is possible to recognize chrysotile fibers by their characteristic hollow-tube structure. Quantification is accomplished by measuring the length and diameter of each fiber, calculating the total mass, and finally relating this mass to the original amount of water sampled.

This technique, which many investigators agree is the best available for the purpose, has several shortcomings. First, because of the extremely small fraction of the sample which can be examined under the electron microscope, and because of the small amounts of asbestos present, the accuracy and precision of the analysis is very poor. Under the best conditions duplicate determinations on the same sample cannot be reproduced by better than a factor of three. Although there are insufficient data available to estimate the accuracy, most agree that the true value is at least within a factor of ten of the measured value. From these values, it is obvious that the reported values can only be used as an index of the relative amount of fiber present, and no great significance should be placed on small differences.

A second limitation of this method is the destruction of the original form of the fibers by the rub-out procedure. There is increasing pressure from medical and biological researchers to have information on the exact size and shape of the fibers as they may be ingested. It is necessary, therefore, that methods be devised to obtain this information.

Finally, the method is specific for chrysotile and cannot be used for the determination of amphibole fibers. This point is important since many varieties of asbestiform minerals can occur in water, and crocidolite is a common ingredient of asbestos-cement pipe.

There are several possible variations of the above technique which might be used to obtain information about the original size and shape of the fibers, and the various types of fiber present. With the transmission electron microscope, it is possible to identify a mineral variety by means of selected area electron diffraction. This method is also limited in that it cannot be used reliably to distinguish between the different types of amphiboles, i.e., crocidolite, amosite, anthophyllite, etc. Thus, one can only be certain that an amphibole mineral is present.

In order to obtain more information about the variety of amphibole fiber, it is necessary to use an electron-probe approach to determine the chemical composition of each fiber in question. This type of analysis can be accomplished in a scanning-electron microscope with the proper accessories, or in the more sophisticated transmission-electron microscope now available, e.g. EMMA IV. These techniques require more time per sample and more sophisticated instrumentation, and are, therefore, much more expensive.

In order to obtain the desired information on the original size and shape of the fibers, it is necessary to explore new sample preparation techniques. Obviously, the technique cannot involve any excessive amount of physical work in the sample. The most promising approach appears to be the direct-transfer method. In this method the solids are collected on a membrane filter. Using a special extraction apparatus, it is then possible to dissolve the filter and deposit the residue on a carbon-coated electron-microscope grid. The sample can then be examined by either transmission or scanning electron microscopy and the actual dimensions of the fibers determined along with the other essential information. This method might suffer from even poorer precision and accuracy than the rub-out technique, but it will yield the information most urgently needed.

Finally, it should be pointed out that the various modifications of the analytical method which have been discussed are only now being explored in various laboratories. Although they do show considerable promise, more work is required to establish their validity and applicability to this problem.



CAPCO JEN 0020284

## Appendix C

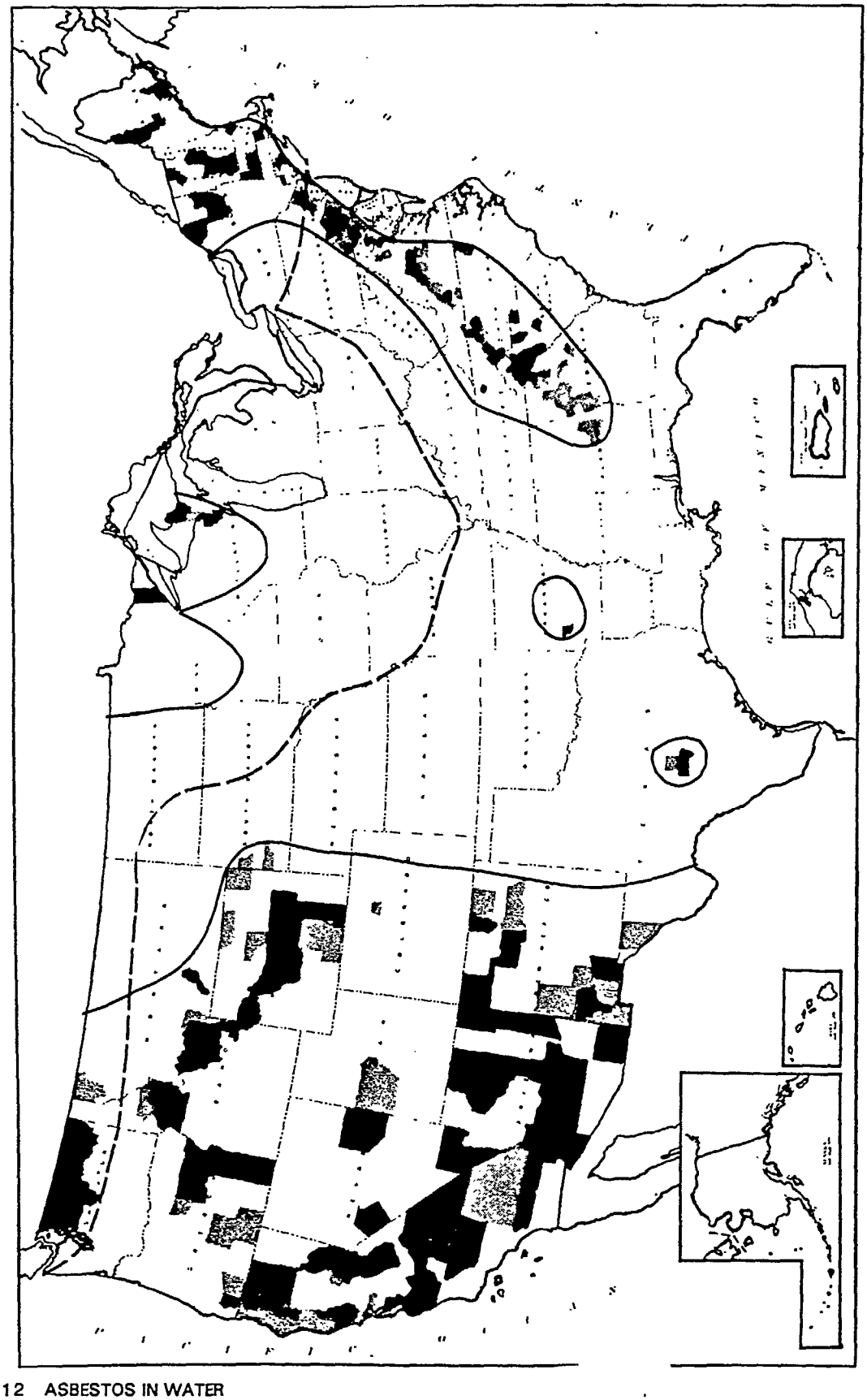

**Key to Map**

1. Crosshatched or shaded areas are counties where amphibole asbestos fibers have been reported.
2. Solid black areas are counties where chrysotile and/or serpentine rock have been reported. If both amphiboles and serpentine are found in a county, it is solid black.
3. Solid lines surround those areas where fiber-bearing rocks might exist.
4. The dashed line shows lowest limit of glacial activity. Rocks not native to the area can be found north of this line.



CAPCO JEN 0020285

# Appendix D-1*

## Introduction

This project was conducted to investigate the removal of chrysotile fiber from the inner walls of asbestos cement pipe by potable water in municipal water systems. Two municipal systems were selected: Malvern, Pennsylvania and Glendale, Arizona. Both systems utilize well water sources. The Malvern well is drilled in a serpentine rock belt (known to contain chrysotile fiber intermixed with the rock), while the Glendale system is outside any serpentine-bearing area.

## Experimental

Pertinent features of the two municipal systems and water properties are given in Table 3 of Appendix D-1-2. Sampling was conducted at the well site and at a location down-line, referred to as the domestic site. The objective was to obtain weekly samples at both sites in both systems; however, manpower and equipment problems caused occasional sampling interruptions. Sampling was initiated at Glendale during September 1969 and continued through December 1970. Sampling at the Malvern well site was initiated in June 1969, but the domestic filtration site was not placed in operation until December 1969 so that comparative well and domestic site data at Malvern was not available as early as Glendale. The sampling sites were not changed throughout the program, with the exception of the Malvern well site where a new well as drilled on the original site in October 1970.

The sampling equipment and procedures are described in Appendix D-1-1. Sample analysis for fiber content, including ashing, rubout and counting, is described in Report No. E404-37 and 404-67. Analysis was conducted at the J-M Research & Engineering Center.

Analytical results for the Malvern and Glendale municipal water systems are presented in Tables 1 and 2 of Appendix D-1-2. Table 3 of Appendix D-1-2, in tabulating the water properties at the well and outlining the pipe systems, provides a basis for interpreting the fiber level data. These fiber level data were analyzed statistically and the results are outlined below.

There is a greater than 99 per cent probability that the initial fiber level (at the well site) is higher at Malvern than at Glendale. Table 3 of Appendix D-1-2 shows the average of all well site samples for Malvern (0.17 $\mu$g/gal) and for Glendale (0.023 $\mu$g/gal). As stated in the introduction, the Malvern well is drilled in an area of serpentine rock, which contains chrysotile fiber, while the Glendale well is not in such an area. It is, therefore, not unexpected that well water from Malvern contains more fiber.

Statistical analysis of the data yields a 90 per cent probability that there was an increase in fiber level between the well site and the domestic site at both Malvern and Glendale. In addition, it was shown that at both Malvern and Glendale (within each system) there is no significant correlation between the initial fiber level and the amount of increase. It thus appears that the water is picking up fiber from the pipe walls, but the amount of pick-up is not significantly influenced by the existing fiber level in the water. Also, this lack of correlation between initial fiber level and amount of increase indicates that the fiber quantification procedure can define changes in fiber level unaffected by the initial level.

Table 3 of Appendix D-1-2 shows that the average fiber level increase at Malvern is 0.28 $\mu$g/gal, while at Glendale the average increase is 0.015 $\mu$g/gal. Statistical analysis yields a 90 per cent probability that Malvern had a greater fiber level increase between the well site and the domestic site than did Glendale. Among the factors that could influence removal of fiber from pipe by water are the water properties, the length of exposure time of the pipe to the water, the flow rate of the water through the pipe and the pipe surface area exposed per unit volume of water.

Table 3 of Appendix D-1-2 shows that there is not a large difference in pipe area exposed per gallon of water between the Malvern (0.80 sq ft/gal) and Glendale (0.96 sq ft/gal) pipe systems. The flow rate through about 90 per cent of the length of the Glendale system was 54 ft/min., similar to the 48 ft/min. through the Malvern system. The first 10 per cent of the Glendale system had a flow rate of 138 ft/min., so that the overall potential for erosion of the pipe was somewhat greater in the Glendale system. The length of exposure time of the pipe to the water could be an influencing factor, but has not been systematically evaluated.

*Abstract from Johns-Manville Research and Engineering Center Report No. E404-79.



CAPCO JEN 0020286

## Appendix D-1-1

### Sampling Municipal Water Systems

**Apparatus Description.**

The filter assembly consists of a top and bottom section. The bottom section (on four legs) contains a coarse stainless steel mesh and sintered stainless steel filter-support disc. The thicker top section is held in place by stainless steel wing-nuts and is fitted with a small bleed valve. The whole assembly is sealed with two O rings. Both top and bottom sections are center-drilled and tapped to receive 1/2-in. pipe.

**Apparatus Hook-up.**

1. To the top section, connect a 4-in. nipple, an elbow, and another nipple to which a plastic pipe or hose may be clamped. The plastic pipe is connected to a cut-off valve tapped into the system.

2. To the bottom section, connect a short nipple, an elbow, and another nipple to connect the water meter. The outflow is run off into a convenient drain.

(Note -All fittings should be brass or stainless steel. Ribbon dope is used as pipe dope could foul the filters.)

**Collecting Sample**

1. Remove the top section of the assembly.

2. On the sintered filter-support, lay (a) a Whatman 541 filter paper which has been cut to size, (b) a 0.8 $\mu$m pore size Millipore filter sheet, and (c) another Whatman 541 filter paper. The filter sheets are all 293 mm diameter.

3. Wet the filter papers from the center outwards, and smooth out the ripples.

4. Replace the top and spin on the wing nuts finger tight.

5. Open the water valve slowly with the bleed valve open. When the test chamber is filled, close the bleed valve.

6. Run approximately 300 -400 gallons through the filter, or until the outflow slows to a trickle.

7. Shut off the water. Note the initial and final meter readings, and record volume, data, location, and any other pertinent data or observations.

8. Open the assembly and remove the top Whatman 541 filter paper plus the Millipore filter sheet. Leave the bottom Whatman filter paper in place for the next test. This bottom filter paper is only used to protect the Millipore from possible damage due to direct contact with the sintered metal support.

9. Fold the filter sheets together into a petri dish for shipment to be analyzed.

## Appendix D-1-2

## JOHNS-MANVILLE RESEARCH AND ENGINEERING CENTER*

**Report No. E404-79**

TABLE 1

*Fiber Level and Ash Content in Municipal Water Samples from Malvern*

| Sample Number | Sampling Date | Ash Content (mg/gal) | | Fiber Level ($\mu$g/gal) | | |
|---|---|---|---|---|---|---|
| | | Well Site | Domestic Site | Well Site | Domestic Site | Increase† |
| M-18 | 12/19/69 | 1.93 | 1.87 | 0.183 | 0.985 | 0 802 |
| M-19 | 1/02/70 | 1.84 | — | 0.152 | — | — |
| M-20 | 1/16/70 | 1.90 | — | 0.083 | — | — |
| M-21 | 1/30/70 | 2.73 | 2.22 | 0.210 | 0.160 | (0.050) |
| M-22 | 2/06/70 | 1.98 | 2.06 | 0.226 | 3.700 | 3.474 |
| M-23 | 2/13/70 | 1.94 | 1.94 | 0.450 | 0 803 | 0.353 |
| M-24 | 2/24/70 | 6 46 | 5.70 | 0.593 | 1.910 | 1.317 |
| M-25 | 3/04/70 | 1.62 | 1.78 | 0 014 | 0.436 | 0.422 |
| M-26 | 3/24/70 | 5.35 | 5.83 | 0.591 | 0.684 | 0.093 |
| M-27 | 4/15/70 | 1.21 | 1.47 | 0.040 | 0.233 | 0.193 |
| M-28 | 5/08/70 | 1.26 | 1.39 | 0.022 | 0.261 | 0.239 |
| M-29 | 7/23/70 | 1.66 | 1.26 | 0.019 | 0.330 | 0.311 |
| M-30 | 8/07/70 | 1.38 | 1.14 | 0 006 | 0.115 | 0.109 |
| M-31 | 8/15/70 | 1.61 | 7.19 | 0 020 | 0.097 | 0.077 |
| M-32 | 8/29/70 | 1.16 | 1.25 | 0 017 | 0.084 | 0.067 |
| M-33 | 9/05/70 | 1.19 | 1.15 | 0.028 | 0.002 | (0.026) |
| M-34 | 9/12/70 | 1.31 | 1.30 | 0.173 | 0.075 | (0.098) |
| M-35 | 9/19/70 | 1.46 | 1.35 | 0.093 | 0.161 | 0.068 |
| M-36 | 10/03/70 | 0.48 | 0.60 | 0.022 | 0.072 | 0.050 |
| M-37 | 10/10/70 | 0.29 | 0.32 | 0.001 | 0.074 | 0.073 |
| M-38** | 10/20/70 | 9.60 | 10.70 | 0.208 | 0.013 | (0.195) |
| M-39** | 10/26/70 | 15.80 | 1.43 | 0.202 | 0.034 | (0.168) |
| M-40** | 11/03/70 | 1.32 | 0.81 | 0 | 0.006 | 0.006 |
| M-41** | 11/12/70 | 10.40 | 8 65 | 0.473 | 0.270 | (0.203) |
| M-42** | 12/12/70 | 2.22 | 3.45 | 0 017 | 0.032 | 0.015 |
| M-43** | 12/19/70 | 1.64 | 1.90 | 0.472 | 0.258 | (0.214) |

*Facsimile of Johns-Manville report.
†Values in parentheses () indicate a decrease.
**New well, drilled at the same location.



CAPCO JEN 0020287

TABLE 2
*Fiber Level and Ash Content in Municipal Water Samples From Glendale*

| Sample Number | Sampling Date | Ash Content (mg/gal) | | Fiber Level (μg/gal) | | |
|---|---|---|---|---|---|---|
| | | Well Site | Domestic Site | Well Site | Domestic Site | Increase† |
| G-1 | 9/10/69 | 0.13 | 1.68 | 0.0880 | 0.2140 | 0.1260 |
| G-2 | 9/17/69 | — | 0.10 | — | 0.0089 | — |
| G-3 | 9/23/69 | 0.08 | 0.67 | 0.0073 | 0.0760 | 0.0687 |
| G-4 | 10/01/69 | 0.09 | 0.06 | 0.0021 | 0.0058 | 0.0037 |
| G-5 | 10/07/69 | 0.06 | 0.30 | 0.0042 | 0.0200 | 0.0158 |
| G-6 | 10/20/69 | 0.11 | 0.22 | 0.0046 | 0.2850 | 0.2804 |
| G-7 | 11/04/69 | 0.32 | 0.20 | 0.0075 | 0.0110 | 0.0035 |
| G-8 | 11/09/69 | 0.20 | 0.18 | 0.0041 | 0.0600 | 0.0559 |
| G-9 | 1/23/70 | 0.58 | 1.09 | 0.0077 | 0.0330 | 0.0253 |
| G-10 | 3/06/70 | 0.33 | 0.32 | 0.0140 | 0.0730 | 0.0590 |
| G-11 | 3/22/70 | 1.34 | 0.34 | 0 | 0.0020 | 0.0020 |
| G-12 | 4/03/70 | 1.49 | 0.32 | 0.0110 | 0.0280 | 0.0170 |
| G-13 | 4/10/70 | 1.72 | 0.09 | 0.0930 | 0.0006 | (0.0924) |
| G-14 | 4/11/70 | 0.22 | 0.18 | 0.0190 | 0.0310 | 0.0120 |
| G-15 | 4/24/70 | 0.06 | 0.08 | 0.0003 | 0.0017 | 0.0014 |
| G-16 | 5/03/70 | 0.07 | 0.21 | 0.0039 | 0.0041 | 0.0002 |
| G-17 | 5/12/70 | 0.09 | 0.13 | 0.0300 | 0.0046 | (0.0254) |
| G-18 | 5/15/70 | 0.10 | 0.14 | 0.0019 | 0.0013 | (0.0006) |
| G-19 | 5/21/70 | 0.08 | 1.79 | 0.1090 | 0.0950 | (0.0140) |
| G-20 | 5/28/70 | 0.19 | 0.25 | 0.0006 | 0.0010 | 0.0004 |
| G-21 | 6/09/70 | 0.29 | 0.79 | 0.1300 | 0.1010 | (0.0260) |
| G-22 | 6/17/70 | 0.07 | 0.43 | 0.0016 | 0.0305 | 0.0289 |
| G-23 | 8/27/70 | 3.45 | 0.51 | 0.1030 | 0.0080 | (0.0950) |
| G-24 | 9/12/70 | 0.26 | 0.24 | 0.0520 | 0.0860 | 0.0340 |
| G-25 | 9/19/70 | 0.24 | 0.55 | 0.0110 | 0.0380 | 0.0270 |
| G-26 | 9/26/70 | 0.11 | 0.41 | 0.0226 | 0.0003 | 0.0223 |
| G-27 | 10/03/70 | 0.14 | 0.08 | 0 | 0.0001 | 0.0001 |
| G-28 | 10/10/70 | 0.09 | 0.09 | 0.0007 | 0.0005 | (0.0002) |
| G-29 | 10/17/70 | 0.07 | 0.07 | 0.0008 | 0.0005 | (0.0003) |
| G-30 | 10/24/70 | 0.09 | 0.06 | 0.0060 | 0.0004 | (0.0056) |
| G-31 | 10/31/70 | 0.07 | 0.06 | 0.0002 | 0.0004 | 0.0002 |
| G-32 | 11/15/70 | 0.04 | 0.09 | 0 | 0.0004 | 0.0004 |
| G-33 | 11/22/70 | 0.06 | 0.07 | not analyzed | not analyzed | — |
| G-34 | 11/29/70 | 0.07 | 0.07 | not analyzed | 0.0118 | — |
| G-35 | 12/06/70 | 0.04 | 0.07 | 0.0028 | 0.0045 | 0.0017 |

*Facsimile of Johns-Manville Report.
†Values in parentheses () indicate a decrease.

TABLE 3
*Municipal System Characteristics and Data Summary*

| | Malvern | Glendale* | |
|---|---|---|---|
| Pipe System: | | | |
| Diameter (in.) | 8 | 12 | 6 |
| Length (ft) | 2800 | 1300 | 12,000 |
| Area exposed to water (sq ft) | 5860 | 4150 | 18,700 |
| Water volume flow rate (gal/min.) | 125 | 800 | 80 |
| Water linear flow rate (ft/min.) | 48 | 138 | 54 |
| Pipe area exposed (sq ft/gal) | 0.80 | 0.54 | 1.06 |
| Water volume in pipe | | 0.96** | |
| Water properties (well site) | | | |
| Total hardness (mg/l $CaCO_3$) | 49 | 94 | |
| Calcium hardness (mg/l $CaCO_3$) | 27 | 61 | |
| Alkalinity (mg/l $CaCO_3$) | 110 | 114 | |
| Dissolved solids (mg/l) | 106 | 328 | |
| pH | 7.8 | 8.0 | |
| Average initial fiber level (μg/gal) (well site) | 0.17 | 0.023 | |
| Average fiber level increase (μg/gal) | 0.28 | 0.015 | |

*The first 1300 ft of the Glendale system utilized 12-in. diameter pipe, followed by 12,000 ft of 6-in diameter pipe.
**Overall system



CAPCO JEN 0020288

## Appendix D-2*

### Introduction

During 1968. a TRANSITE pipe test line was installed in a building situated adjacent to the Research Filtration plant. The purpose of this installation was to determine the amount of asbestos fibers entering a potable water supply after passing through TRANSITE water pipe.

### Procedure

Originally, the system was constructed for 175 GPM to pass through the installation on a once-through basis. Trial runs revealed that a once-through system was not feasible due to almost immediate plugging of filters. Consequently, the system was converted to a semi-closed recirculating system with a small amount of filtered fresh water continuously entering the system, and an equal amount of system water discharged to the sewer, in order to prevent dissolved solids buildup. (See Figure 1 of appendix for schematic and equipment list). (Refer also to Research Report No. 425-T-1345).

The most critical portion of the test involved two Millipore filters, one before the TRANSITE line and one after the TRANSITE line. The TRANSITE line was 30 feet of Class 200 RTPP from Waukegan Plant. The pre-TRANSITE filter was a 40 plate Millipore containing 40 sheets (293 mm diameter) of 0.8 micrometer filter paper. Before entering the TRANSITE line, all water passed through this filter. The 0.8 micrometer size was chosen based on chem lab tests showing that 0.8 micrometer filter paper would retain 100 percent of the asbestos. (See Research Report No. 425-Int-1301). After leaving the TRANSITE line, ten percent of the water was sampled by a ten plate Millipore filter also containing 0.8 micrometer filter paper. Thus, all of the asbestos fiber found on this filter can be considered to have come from the pipe wall. Hardness of the water was controlled by a water softener and pH was controlled by a chemical injection pump using dilute sulfuric acid. Water volume was about 150 GPM and flow rate was 6 -8 FPS. A series consisted of a minimum of ten weekly runs at a chosen pH and hardness level. At the end of each weekly run, the ten papers from the sampling Millipore were delivered to the chemistry lab for fiber analysis. A fresh TRANSITE line was installed at the start of each series of runs.

Fiber analysis was originally intended to be based on the

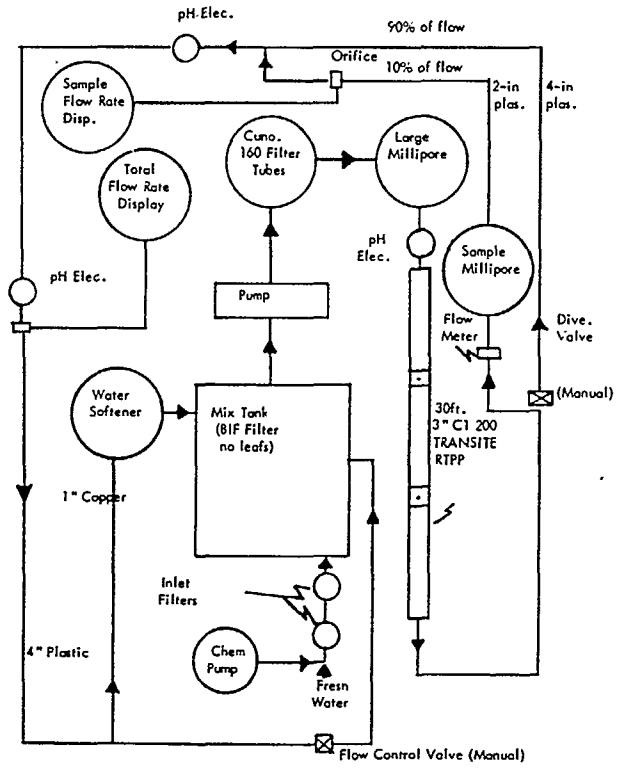


Fig. 1. Schematic Diagram of Test Line Installation

*Inlet water Flowmeter–Fischer & Porter No. 10A3535SY-9.5 GPM max.*
*Inlet Water Filter – Pall Trinity Micro Corp. filter housing No. MCS1002UX16 utilizing two pleated paper filter cartridges No. MCY1001UX rated for 100 percent removal of 0.8 micrometer.*
*Chemical Pump on Inlet Water – Chemcon Pump – Model No. L24 "Raider"*
*Diatomite Filter – BIF Model No. 1865-03 vacuum diatomite filter, 240 square feet, flow rate 175 GPM at five psig. Operated with leafs removed and no diatomite in system.*
*Pump – Weinman Model 2KB (Centrifugal) capacity 175 GPM at 220 feet TDH, 2-inch discharge, 3-inch suction flanged, 20 HP 3500 RPM motor 460-3-60.*
*Cuno Filter – "Micro-Wynd" cartridge type filter, type CG 40 S-4 for 175 GPM at 1.0 micrometer filter density, 95 psig inlet -five psig pressure drop. Cartridges used are 160 each of JM 2E7P or equivalent.*
*Large Millipore – Millipore 20 set multi plate filter unit complete in 30 set plate capacity bell housing. 0.8 micrometer filter papers.*
*Sample Millipore – Millipore five set multi-plate filter unit complete in five set capacity bell housing. 0.8 micrometer filter papers.*
*Sampling Flowmeter – Schutte & Koerting Figure No. 18410 size 6HCF6 type SK W/S.S. fittings, 17.5 GPM at 65 psig one-inch connections.*
*Sampling Orifice & Recorder – Beckman model No. 153062, capacity 17.5 GPM with one pair 1-1/2 inch PVC orifice flanges.*
*pH Meters – Beckman Model No. 900.*
*Water Softener – Sears Roebuck Model No. 625.3474 - capacity 8.5 GPM.*
*Total Flow Orifice & Display – Foxboro, serial No. 423484, capacity 300 GPM (model No. unknown). Water Testing – Hach portable engineers kit - Model No. DR 1834B.*

*From Johns-Manville Research and Engineering Center, Report No. 425-T-1360.



CAPCO JEN 0020289

magnesium content found on the sampling Millipore. However, due to the extremely small amounts of fiber and because of traces of magnesium from cement in the pipe and magnesium in the water, this approach was abandoned. The results from the first few runs were, therefore, considered invalid and are not reported. Runs "C" through "G" results were considered to be as accurate as possible and are reported as valid runs. (See Tables 1 -11). Fiber analysis was performed by the chemistry lab using particle and fiber counts of magnified electron microscope photographs combined with a radioactive tracer technique. Observation of the data showed that in all series of runs, the amount of fiber in the water is extremely small. For instance, calculating the numbers of gallons needed to produce one gram of fiber results in the following:

| Run | No. Gallons Required for 1.0 g Fiber |
|---|---|
| C | 5,950,000,000 |
| D | 8,130,000,000 |
| E | 12,800,000,000 |
| F | 71,400,000,000 |
| G | 11,200,000,000 |

## JOHNS-MANVILLE RESEARCH AND ENGINEERING CENTER**

**Report No. 425-T-1360**

TABLE 1

*"C" Series of Runs-Test Line Data*
*(See Research Report No. 404-56)*
*Water Not Treated During This Series*

| Run No. | Hours of Test | Water Flow (gal.) Total × $10^3$ | Water Flow (gal.) Sample- × $10^3$ | Avg. Rate (GPM) | Avg. pH | Avg Total Hardness* |
|---|---|---|---|---|---|---|
| 1 | 99.0 | 1031 | 106.1 | 174 | 7.5 | 120 |
| 2 | 93.5 | 996 | 97.5 | 178 | 7.3 | 125 |
| 3 | 96.0 | 965 | 91.4 | 168 | 7.2 | 109 |
| 4 | 95.0 | 941 | 89.8 | 165 | 6.8 | 101 |
| 5 | 72.0 | 737 | 65.3 | 168 | 7.3 | 105 |
| 6 | 96 3 | 1004 | 103.3 | 175 | 7.3 | 111 |
| 7 | 96.0 | 821 | 74.2 | 140 | 6.9 | 95 |
| 8 | 96.0 | 979 | 89.9 | 170 | 7.0 | 102 |
| 9 | 96 0 | 914 | 82.1 | 159 | 7.2 | 103 |
| 10 | 95.0 | 714 | 62 2 | 125 | 7.3 | 76 |
| 11 | 96 3 | 953 | 89.5 | 165 | 7.1 | 78 |
| 12 | 75.0 | 745 | 70 0 | 110 | 6.8 | 95 |
| 13 | 96 0 | 893 | 74 9 | 155 | 7.0 | 100 |
| 14 | 72.0 | 698 | 61.2 | 160 | 7.3 | 102 |
| 15 | 96 0 | 850 | 75.6 | 148 | 7.5 | 113 |
| 16 | 96.3 | 938 | 81.4 | 163 | 7.1 | 123 |
| 17 | 72.0 | 706 | 61.2 | 163 | 7.5 | 122 |
| 18 | 96.3 | 852 | 74.1 | 148 | 7.6 | 119 |
| 19 | 97.0 | 945 | 90 2 | 163 | 7.0 | 108 |
| 20 | 96.0 | 857 | 82.1 | 150 | 6 9 | 102 |
| | | | | | avg. 7.2 | avg. 105 |

*Facsimile of Johns-Manville report.
†As mg/l $CaCO_3$
Run Dates - January 6, 1969 - July 25, 1969

TABLE 2

*"C" Series of Runs-Fiber Data*
*(See Research Report No. 404-56)*

| Run No. | Water Sampled (gal) × $10^3$ | Ashed Solids (mg) | Fiber in Ashed Solids (%) | Fiber in Water (µg/gal)* |
|---|---|---|---|---|
| 1 | 106.1 | 21.4 | 0 0337 | 6 8 × $10^{-5}$ |
| 2 | 97.5 | 41.5 | 0 0140 | 6.0 × $10^{-5}$ |
| 3 | 91.4 | 51 0 | 0.135 | 75 0 × $10^{-5}$ |
| 4 | 89 8 | 47.2 | 0 0506 | 27 0 × $10^{-5}$ |
| 5 | 65.3 | 118.5 | 0.0112 | 20 0 × $10^{-5}$ |
| 6 | 103.3 | 53.6 | 0.0040 | 2.1 × $10^{-5}$ |
| 7 | 74.2 | 228.5 | 0 0168 | 52.0 × $10^{-5}$ |
| 8 | 89.9 | 130.0 | 0.0001 | 0.14 × $10^{-5}$ |
| 9 | 82.1 | 152.5 | 0 0061 | 11.0 × $10^{-5}$ |
| 10 | 62.2 | 106.3 | 0 0030 | 5.1 × $10^{-5}$ |
| 11 | 89.5 | 47.6 | 0 0025 | 1.3 × $10^{-5}$ |
| 12 | 70 0 | 32.0 | 0.0242 | 11.0 × $10^{-5}$ |
| 13 | 74.9 | 116.1 | 0.0075 | 12.0 × $10^{-5}$ |
| 14 | 61.2 | 38.6 | 0.0043 | 2.7 × $10^{-5}$ |
| 15 | 75.6 | 70.3 | 0.0115 | 11.0 × $10^{-5}$ |
| 16 | 81.4 | 26 0 | 0.0251 | 8 0 × $10^{-5}$ |
| 17 | 61.2 | 83.5 | 0.0061 | 8.4 × $10^{-5}$ |
| 18 | 74.1 | 27.2 | 0.0648 | 24 0 × $10^{-5}$ |
| 19 | 90 2 | 27.5 | 0.162 | 49.0 × $10^{-5}$ |
| 20 | 82.1 | 17.7 | 0 0138 | 3 0 × $10^{-5}$ |
| | | | | avg. 16 8 × $10^{-5}$ |

*Facsimile of Johns-Manville report
†Micrograms/gal (1 microgram - 1 millionth of a gram)
See Research Report No. E404-37 for method



CAPCO JEN 0020290

## JOHNS-MANVILLE RESEARCH AND ENGINEERING CENTER*

**Report No. 425-T-1360**

TABLE 3

*"D" Series of Runs - Test Line Data*
*(See Research Report No. 404-63)*
*Treated Water - Goal: pH-7, Hardness - 50*

| Run No. | Hours of Test | Water Flow (gal.) Total × $10^3$ | Water Flow (gal.) Sampled ×$10^3$ | Avg Rate (GPM) | Avg. pH | Avg. Total Hardness† |
|---|---|---|---|---|---|---|
| 1 | 96 0 | 806 | 64.8 | 140 | 7.4 | 54 |
| 2 | 96 0 | 900 | 73.4 | 156 | 7.4 | 53 |
| 3 | 95.5 | 958 | 91 0 | 168 | 6 8 | 50 |
| 4 | 96 0 | 878 | 86.4 | 153 | 7.2 | 39 |
| 5 | 96.0 | 943 | 91.4 | 164 | 7.4 | 44 |
| 6 | 96 0 | 743 | 71.3 | 130 | 7 3 | 54 |
| 7 | 96.0 | 950 | 90.7 | 165 | 7.2 | 57 |
| 8 | 96.0 | 842 | 84 6 | 146 | 7 3 | 55 |
| 9 | 71.0 | 499 | 49.2 | 117 | 7.4 | 56 |
| 10 | 95.5 | 939 | 91.4 | 164 | 7.2 | 48 |
| | | | | | | avg. 51 |

*Facsimile of Johns-Manville report
†As mg/l $CaC0_3$
Run dates - January 19, 1970 - March 30, 1970

## JOHNS-MANVILLE RESEARCH AND ENGINEERING CENTER*

**Report No. 425-T-1360**

TABLE 5

*"E" Series of Runs-Test Line Data*
*(See Research Report No. 425-Int.-1361)*
*Treated Water Goal-pH-7, Hardness - 25*

| Run No. | Hours of Test | Water Flow (gal) Total × $10^3$ | Water Flow (gal) Sampled × $10^3$ | Avg. Rate (GPM) | Avg. pH | Avg. Total Hardness† |
|---|---|---|---|---|---|---|
| 1 | 96.0 | 828 | 77 0 | 144 | 7.1 | 25 |
| 2 | 95.5 | 917 | 83.9 | 160 | 7.4 | 24 |
| 3 | 96 0 | 763 | 72 0 | 130 | 7.8 | 17 |
| 4 | 74.3 | 727 | 74.2 | 163 | 7 8 | 26 |
| 5 | 94.0 | 853 | 88.1 | 151 | 7.5 | 26.5 |
| 6 | 96.0 | 792 | 82 8 | 137.5 | 7.1 | 24 |
| 7 | 71.5 | 708 | 70 8 | 165 | 7.3 | 26 |
| 8 | 96 0 | 922 | 93 6 | 160 | 7.4 | 24 |
| 9 | 97.0 | 941 | 96 0 | 160 | 7.4 | 23 |
| 10 | 94.5 | 907 | 93 6 | 160 | 7.5 | 26 |
| 11 | 95.0 | 905 | 90 5 | 159 | 7.2 | 24 |
| 12 | 95.0 | 862 | 88 4 | 151 | 7.1 | 23 5 |
| 13 | 95.0 | 855 | 87.7 | 150 | 7.2 | 21 |
| 14 | 96.0 | 547 | 56 2 | 95 | 7.1 | 23 |
| | | | | | avg 7.35 | avg. 24 |

*Facsimile of Johns-Manville report
†As mg/l $CaC0_3$
Run Dates - April 6, 1970 - November 6, 1970

## JOHNS-MANVILLE RESEARCH AND ENGINEERING CENTER*

**Report No.425-T-1360**

TABLE 4

*"D" Series of Runs - Fiber Data*
*(See Research Report No. 404-63)*

| Run No. | Water Sampled (gal) ×$10^3$ | Ashed Solids (mg) | Fiber in Water ($\mu g/gal.$)† |
|---|---|---|---|
| 1 | 64 8 | 58.1 | $9.6 \times 10^{-5}$ |
| 2 | 73 4 | 55.0 | $37.6 \times 10^{-5}$ |
| 3 | 91.0 | 34.0 | $19.2 \times 10^{-5}$ |
| 4 | 86.4 | 31.7 | $12.5 \times 10^{-5}$ |
| 5 | 91.4 | 31.4 | $4.7 \times 10^{-5}$ |
| 6 | 71.3 | 26.5 | $10 3 \times 10^{-5}$ |
| 7 | 90 7 | 34.8 | $6 8 \times 10^{-5}$ |
| 8 | 84 6 | 37.4 | $4.8 \times 10^{-5}$ |
| 9 | 49.2 | 37.0 | $5.8 \times 10^{-5}$ |
| 10 | 91.4 | 41.4 | $11.7 \times 10^{-5}$ |
| | | | avg. $12.3 \times 10^{-5}$ |

*Facsimile of Johns-Manville report
†Using radioactive tracer method; D-G series

## JOHNS-MANVILLE RESEARCH AND ENGINEERING CENTER*

**Report No. 425-T-1360**

TABLE 6

*"E" Series of Runs-Fiber Data (See Research Report No. 404-75)*

| Run No. | Water Sampled (gal.) × $10^3$ | Ashed Solids (mg) | Fiber in Ashed Solids (%) | Fiber in Water ($\mu g/gal$) |
|---|---|---|---|---|
| 1 | 77.0 | 58.3 | 0.0783 | 59 0 $\times 10^{-5}$ |
| 2 | 83.9 | 58.9 | 0 0120 | 8.0 $\times 10^{-5}$ |
| 3 | 72 0 | 46 8 | 0 0065 | 2 0 $\times 10^{-5}$ |
| 4 | 74 2 | 73 1 | 0.0023 | 2.3 $\times 10^{-5}$ |
| 5 | 88.1 | 37.7 | 0.0231 | 9.9 $\times 10^{-5}$ |
| 6 | 82.8 | 39.2 | 0.0054 | 2.1 $\times 10^{-5}$ |
| 7 | 70 8 | 46 6 | 0.0126 | 8.4 $\times 10^{-5}$ |
| 8 | 93.6 | 43.0 | 0 0061 | 2.7 $\times 10^{-5}$ |
| 9 | 96.0 | 44.8 | 0.0003 | 0.1 $\times 10^{-5}$ |
| 10 | 93.6 | 39.2 | 0.0253 | 11.0 $\times 10^{-5}$ |
| 11 | 90 5 | 42 7 | 0.0032 | 1.5 $\times 10^{-5}$ |
| 12 | 88 4 | 39.4 | 0.0001 | 0.05 $\times 10^{-5}$ |
| 13 | 87.7 | 37.1 | 0.0034 | 1.4 $\times 10^{-5}$ |
| 14 | 56.2 | 39.0 | 0.0010 | 0.7 $\times 10^{-5}$ |
| | | | | avg. 7.8 $\times 10^{-5}$ |

*Facsimile of Johns-Manville report



CAPCO JEN 0020291

## JOHNS-MANVILLE RESEARCH AND ENGINEERING CENTER*

Report No. 425-T-1360

TABLE 7

*"F" Series of Runs–Test Line Data*

*(See Research Report No. 425-Int-1362)*

*Treated Water Goal–pH-6, Hardness–25*

| Run No. | Hours of Test | Water Flow (gal) Total ×10³ | Water Flow (gal) Sampled ×10³ | Avg. Rate (GPM) | Avg. pH | Avg. Total Hardness† |
|---|---|---|---|---|---|---|
| 1 | 144.0 | 1,311 | 134 0 | 152 | 6 0 | 26 0 |
| 2 | 95 0 | 855 | 85 9 | 150 | 6.1 | 26.5 |
| 3 | 96 0 | 871 | 87.1 | 151 | 6 1 | 28 0 |
| 4 | 96 0 | 868 | 87.1 | 151 | 5 3 | 21.5 |
| 5 | 96 0 | 864 | 87.1 | 150 | 6 0 | 24 5 |
| 6 | 96 0 | 857 | 85.7 | 150 | 6 0 | 24 0 |
| 7 | 95 0 | 827 | 82.0 | 145 | 6 0 | 32 0 |
| 8 | 96.0 | 806 | 80 3 | 140 | 6 3 | 31.0 |
| 9 | 96 0 | 893 | 92 2 | 155 | 5.7 | 20 0 |
| 10 | 95.5 | 876 | 91.5 | 152.5 | 6 0 | 23 0 |
| | | | | | avg. 6 0 | avg 25.7 |

*Facsimile of Johns-Manville Report
†As mg/l $CaCO_3$
Run Dates - November 16, 1970 - March 19, 1971

## JOHNS-MANVILLE RESEARCH AND ENGINEERING CENTER*

Report No. 425-T-1360

TABLE 9

*"G" Series of Runs–Test Line Data*

*(See Research Report No. 425-Int-1363)*

*Treated Water Goal–pH-5, Total Hardness–0*

| Run No. | Hours of Test | Water Flow (gal.) Total × 10³ | Water Flow (gal.) Sampled × 10³ | Avg. Rate (GPM) | Avg pH | Avg. Total Hardness† |
|---|---|---|---|---|---|---|
| 1 | 96 0 | 864 | 88.9 | 150 | 5.1 | 11.5 |
| 2 | 72.0 | 648 | 65.2 | 150 | 4.3 | 12 |
| 3 | 96 0 | 814 | 83.9 | 140 | 5.1 | 10 |
| 4 | 95.0 | 670 | 71.7 | 120 | 5 0 | 16 |
| 5 | 96 0 | 857 | 88 6 | 150 | 5 0 | 13 |
| 6 | 96.0 | 814 | 83.2 | 140 | 4 8 | 12.5 |
| 7 | 96 0 | 742 | 78.1 | 130 | 4 8 | 13 |
| 8 | 96.0 | 662 | 67.3 | 115 | 5.1 | 11 |
| 9 | 96.0 | 835 | 85.3 | 145 | 5.15 | 12 |
| 10 | 72.0 | 605 | 58 3 | 140 | 4 9 | 12 |
| | | | | | avg.4 9 | avg 12 |

*Facsimile of Johns-Manville report
†As mg/l $CaCO_3$
Run Dates - March 29, 1971 - June 4, 1971

JOHNS-MANVILLE RESEARCH AND ENGINEERING CENTER*

Report No. 425-T-1360

TABLE 8

*"F" Series of Runs–Fiber Data*

*(See Research Report No. 425-T-1357)*

| Run No. | Water Sampled (gal) × 10³ | Ashed Solids (mg) | Fiber in Ashed Solids (%) | Fiber in Water (μg/gal.) |
|---|---|---|---|---|
| 1 | 1,311 | 42 2 | 0.0061 | $0.1 \times 10^{-5}$ |
| 2 | 855 | 37.0 | 0.011 | $4 8 \times 10^{-5}$ |
| 3 | 871 | 33.6 | 0.0095 | $3 6 \times 10^{-5}$ |
| 4 | 868 | 28.7 | 0 0017 | $0.5 \times 10^{-5}$ |
| 5 | 864 | 28.7 | 0 0017 | $0 5 \times 10^{-5}$ |
| 6 | 857 | 35.4 | 0.0004 | $0.1 \times 10^{-5}$ |
| 7 | 827 | 32 8 | none detected | none detected |
| 8 | 806 | 36 9 | 0 0062 | $2.8 \times 10^{-5}$ |
| 9 | 893 | 32.1 | 0 0005 | $0.1 \times 10^{-5}$ |
| 10 | 876 | 35.2 | 0.0040 | $1.5 \times 10^{-5}$ |
| | | | | avg. $1.4 \times 10^{-5}$ |

*Facsimile of Johns-Manville report.

JOHNS-MANVILLE RESEARCH AND ENGINEERING CENTER*

Report No. 425-T-1360

TABLE 10

*"G" Series of Runs–Fiber Data*

*(See Research Report 425-T-1357)*

| Run No. | Water Sampled (gal.) × 10³ | Ashed Solids (mg) | Fiber in Ashed Solids (%) | Fiber in Water (μg/gal) |
|---|---|---|---|---|
| 1 | 88.9 | 40.3 | 0 020 | $9.0 \times 10^{-5}$ |
| 2 | 65.2 | 35.6 | 0 0025 | $1.3 \times 10^{-5}$ |
| 3 | 83.9 | 46.5 | 0 054 | $30.2 \times 10^{-5}$ |
| 4 | 71.7 | 40.3 | 0.0021 | $1.1 \times 10^{-5}$ |
| 5 | 88.6 | 67.3 | 0.018 | $14.0 \times 10^{-5}$ |
| 6 | 83.2 | 39.0 | 0.0004 | $0.1 \times 10^{-5}$ |
| 7 | 78.1 | 33.4 | 0.043 | $18.4 \times 10^{-5}$ |
| 8 | 67.3 | 34.1 | 0.015 | $7.6 \times 10^{-5}$ |
| 9 | 85.3 | 43.3 | 0.012 | $6.2 \times 10^{-5}$ |
| 10 | 58.3 | 59.4 | 0.0010 | $1.0 \times 10^{-5}$ |
| | | | | avg. $8.9 \times 10^{-5}$ |

TABLE 11

*Examination of Pipe From Test Series D Through G*

Method - Sections were cut from pipe from test series D through G. Interiors were probed and scraped with a knife blade to determine extent of I.D. softening. Results were:

| Run | Estimated Softening Depth | Comments |
|---|---|---|
| D | 1 mil | Appears normal |
| E | 1 mil | Appears normal |
| F | 1 mil | Appears normal |
| G | 3-5 mils | I.D. stained brown†, slight softening |

*Facsimile of Johns-Manville report
†Due to rust in system

CAPCO JEN 0020292

# Appendix D-3
## Municipal Water Systems Analysis

| Sample | Filtered Quantity (Gals) | Ash mg | Per Cent Fiber in Ash | Fiber in Original Water mg/l | pH | Total Solids mg/l | Total Hardness mg/l | Calcium Hardness mg/l | Total Alkalinity* mg/l | Iron mg/l |
|---|---|---|---|---|---|---|---|---|---|---|
| 11 Globe source | 5 | 3.0 | 0.043 | 0.26 | 8.1 | 479 | 156 | 124 | 214 | 0.02 |
| 12 Globe dist. system | 5 | 40.4 | 0.0053 | 0.43 | 8.0 | 614 | 163 | 118 | 228 | 0.10 |
| 13 San Diego source | 5 | 2.0 | 0.067 | 0.27 | - | - | - | - | - | - |
| 14 San Diego dist. system | 4-1/3 | 10.0 | 0.137 | 3.16 | 8.0 | 753 | 324 | 204 | 114 | 0.07 |
| 15 Long Beach source | 5 | 20.9 | 0.060 | 2.51 | - | - | - | - | - | - |
| 16 Long Beach dist. system | 4-1/3 | 10.3 | 0.098 | 2.34 | 8.0 | 409 | 104 | 76 | 134 | 0.05 |
| 17 Providence source | 4 | 2.7 | 0.141 | 0.95 | 9.4 | 63 | 29 | 25 | 5+10(15) | 0.02 |
| 18 Providence dist. system | 4 | 3.6 | 0.161 | 1.45 | 10.5 | 86 | 56 | 55 | 35+15(50) | 0.05 |
| 19 Providence dist. system | 4 | 2.5 | 0.351 | 2.19 | 10.2 | 82 | 45 | 44 | 20+15(35) | 0.04 |
| 20 Providence source | 4 | 1.0 | 0.302 | 0.76 | 9.8 | 62 | 31 | 25 | 10+5(15) | 0.01 |
| 21 Providence dist. system | 4 | 0.7 | 0.574 | 1.01 | 9.8 | 61 | 30 | 25 | 5+10(15) | 0.03 |
| 22 Wichita dist. system | 2 | 21.1 | 0.015 | 1.58 | 9.0 | 359 | 113 | 61 | 13+82(95) | 0.01 |
| 23 Wichita source | 4 | 5.6 | 0.084 | 1.18 | 8.4 | 355 | 72 | 49 | 2+84(86) | 0.35 |
| 24 Wichita dist. system | 1 | 27.4 | 0.022 | 6.03 | 8.9 | 380 | 105 | 52 | 9+80(89) | 2.5 |
| 25 Memphis dist. system | 5 | 7.6 | 0.422 | 6.42 | 8.3 | 59 | 28 | 16 | 36 | 0.08 |
| 46 Saginaw source | 4 | 18 0 | 0.00026 | 0.012 | 8.0 | 138 | 106 | 75 | 82 | 0.026 |
| 47 Saginaw dist. system | 4 | 4.3 | 0.00045 | 0 0048 | 9.0 | 113 | 80 | 54 | 68 | 0.011 |
| 48 Winnepeg source | 5 | 11.0 | 0.026 | 0.57 | 7.8 | 137 | 97 | 69 | 87 | 0.068 |
| 49 Winnepeg dist. system | 5 | 6.9 | 0.034 | 0.47 | 8.0 | 129 | 98 | 68 | 87 | 0.088 |

*Phenolphthalein Alkalinity + Methyl Orange Alkalinity (Total Alkalinity in mg/l $CaCO_3$)

### Chrysotile Asbestos Content of River Water

| | 3/71 | 4/71 | 5/71 | 6/71 | 7/71 | 8/71 | 9/71 | 10/71 | 11/71 | 12/71 | 1/72 | 2/72 | 3/72 |
|---|---|---|---|---|---|---|---|---|---|---|---|---|---|
| *Juniata River* | | | | | | | | | | | | | |
| Breetewood, PA. | 0.0 | 0 0 | 1.31 | 2.75 | 0.0 | 4.06 | 9.20 | 0.6 | 0.19 | 2.92 | 1.81 | 5.61 | 0.0 |
| Newton-Hamilton | 0.0 | 0.0 | 0.0 | 0.0 | 0.0 | 2.37 | 0 0 | 0.0 | 1.21 | 6.18 | 5.48 | 4.16 | 8.66 |
| Lewistown | 2.96 | 2.89 | 2.36 | 3.35 | - | 10.79 | 0.0 | 0.0 | 1.09 | 8.57 | 14.96 | — | — |
| Amity Hall | 6.06 | 6.30 | 2.96 | 0.0 | - | 2.02 | 0.0 | 0.0 | 2.36 | 0.0 | 14.83 | — | — |
| *Connecticut River* | | | | | | | | | | | | | |
| Canaan, Vt. | 48.05 | 13.93 | 1.48 | 1.25 | 0.0 | 6.74 | 1.83 | 2.95 | 0.43 | 1.58 | 0.0 | 0.48 | 0.0 |
| Littleton, N.H. | 2.61 | 0.0 | 2.81 | 2.77 | 5.08 | 0.0 | 13.79 | 0.83 | 1.25 | 0.0 | 1.96 | 1.86 | 0.0 |
| Lebanon, N.H. | 2.43 | 0.0 | 0.0 | 3.13 | 2.64 | 1.92 | 0.0 | 1.66 | 1.70 | 1.15 | 1.39 | 1.03 | 0.0 |
| Greenfield, Mass. | 6.39 | 23.48 | 3.41 | 0.0 | 0.67 | 4 07 | 2.98 | 4.44 | 1 68 | 1 03 | 12.08 | 4.59 | 1.95 |
| Middletown, Conn. | 6.33 | 11.59 | 4.61 | 10.10 | 6.75 | 14.48 | 0 0 | 0 88 | 0.48 | — | 3.02 | 4.32 | 8.68 |

Note: All numbers in micrograms per gallon.
0 = no fibers detected or fewer fibers than considered reliable
All values determined by electron microscope observation. No fibers were visible in any of the samples under optical microscopic observation at 450X magnification.



CAPCO JEN 0020293

## Appendix E

### Dose-Response Relationship

In persons occupationally exposed to asbestos (McDonald and Enterline) most of the cancers reported are of the respiratory system. However, some of the asbestos is ingested, and excesses of digestive system cancers are also reported. The figure compares the rates of digestive system cancers following exposure of two groups of asbestos workers: McDonald - miners; Enterline - retired industrial workers.

Since McDonald and Enterline measure their responses on different scales, an attempt was made to equate these scales using the bronchus and lung data. This led to an "equivalent average death rate" (EADR) of ten being roughly comparable to a "standard mortality ratio" (SMR) of 100, an EADR of 20 ≃ SMR of 400, EADR of 30 ≃ SMR of 600, etc. as shown on the figure.

It also led to a dose response relationship as shown by the line of triangles. This dose response relationship is not appropriate for the digestive system. In fact, there appear to be two dose response relationships in these data with the one for the miners at a higher risk than the industrial workers for the same exposure in mppcf years.

Because of the paucity of data, some dose groups for both the McDonald series and for the Enterline series were combined. McDonald originally reported six dose groups collapsed here into four. Enterline first reported seven dose groups. In one publication, he collapsed these into five, and in this figure they are further collapsed into three. Both the McDonald data and the Enterline data show positive dose response relationships. The Enterline data are possibly consistent with a threshold somewhere above ten mppcf years. The McDonald data show no evidence of a threshold.

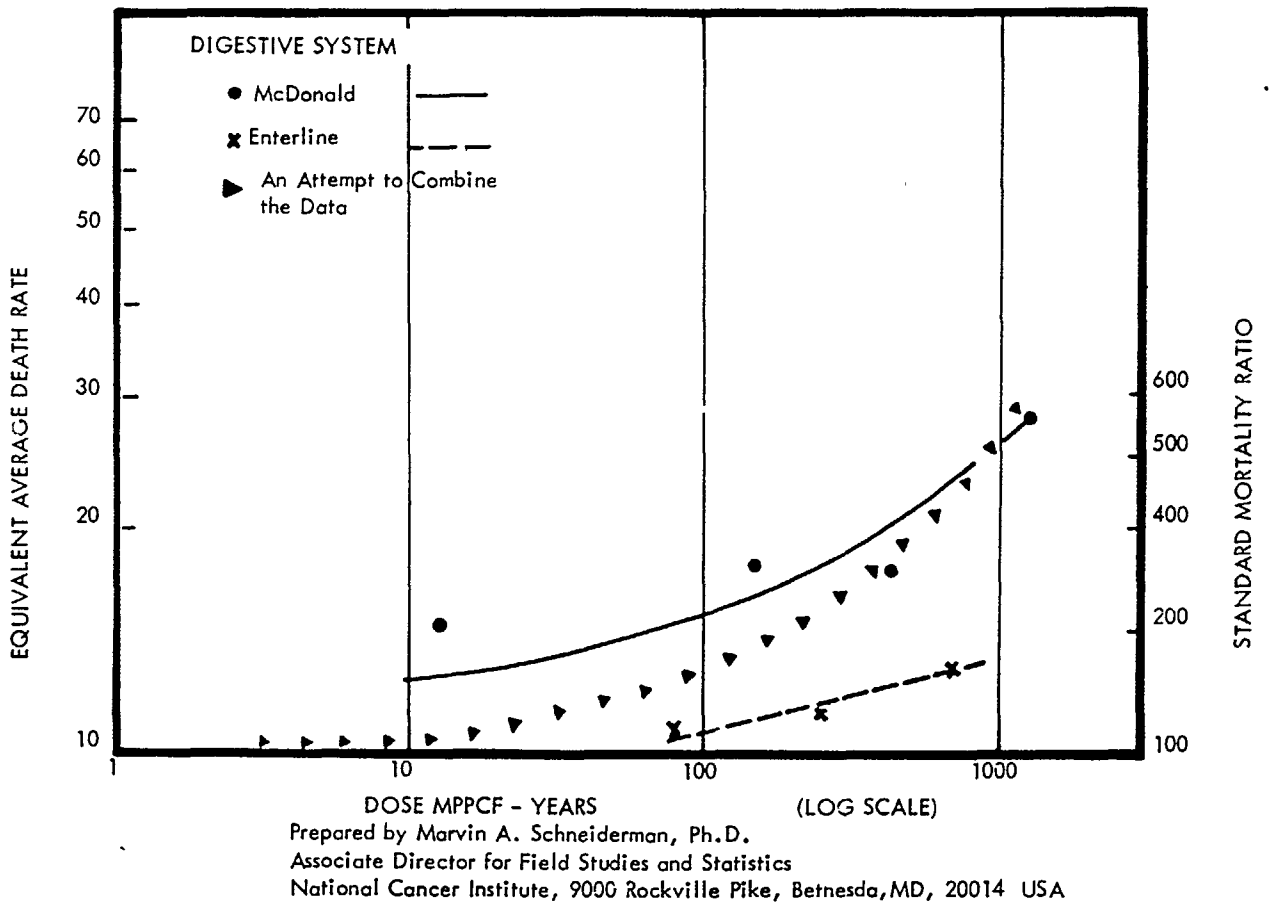


Prepared by Marvin A. Schneiderman, Ph.D.
Associate Director for Field Studies and Statistics
National Cancer Institute, 9000 Rockville Pike, Betnesda,MD, 20014 USA

Fig. 2. Dose vs Death Rate



CAPCO JEN 0020294

## Appendix F

Research suggested for further elucidation of the primary question "Does the use of asbestos-cement pipe in the potable water systems constitute a health hazard?" Not arranged in priorities.

1. Develop a standard method for determining asbestos in water according to needs for item 2.

2. Determine the quantity of asbestos by categories of size (length and diameter) as it actually exists during variations that might be introduced over time, installation, tapping, etc. in potable water supplies distributed in asbestos-cement, metal and plastic pipe.

3. Determine the increment of asbestos fibers added to the water as it traverses asbestos-cement, metal and plastic pipe systems under varying circumstances of installation and operation.

4. Determine the contribution that the asbestos content of soil, in which pipe of the three kinds is imbedded, makes to the asbestos content of the water traversing the pipe.

5. Determine the effect of water flow in an asbestos-cement pipe loop (not installed in soil) under varying conditions of velocity and aggressiveness, and also with respect to distance and temporal influences.

6. Examine the use of crocidolite content of water as a "marker" of fiber migration from the asbestos-cement pipe wall to water in operating systems. (Pipe loop and in situ).

7. Conduct animal studies both by inhalation and direct ingestion to examine the quantitative aspects (total and for various kinds, sizes and shapes of fiber) of fiber entry into and its fate in the gastro-intestinal system and migration from the system. Clearance and migration studies.

8. Conduct animal inhalation and feeding studies to explore possible carcinogenic effects (gastro-intestinal, peritoneal and others). Perhaps combine this with #7.

9. Conduct studies to ascertain whether or not fibers migrating from either lung or gastro-intestinal tract might reach the peritoneum. Perhaps as part of #7.

10. Conduct a direct study of human population groups exposed to asbestos-cement pipe distribution systems in contrast to distribution systems of other materials in terms of cancer experience—especially gastro-intestinal and peritoneal mesothelioma.

11. Conduct studies to develop better dose relationships involving occupational exposure to asbestos and gastro-intestinal and mesothelial cancer experiences.



CAPCO JEN 0020295

stress at zero pressure with external load only. Calculations showed that the larger of the two thicknesses obtained by designing separately for (1) external load with no internal pressure and (2) internal pressure with no external load is greater than the thickness calculated by the appropriate Spangler equation for combined external load and internal pressure. Therefore, the separate stress design detailed in the standard was selected.

6. *Design for internal pressure.* Results of a large number of wall tensile tests conducted in conjunction with full-length bursting tests of ductile-iron pipe[6] of various sizes and thicknesses showed that a design hoop stress of 16,800 psi for internal pressure is appropriate and conservative. This stress is 40 per cent of the minimum yield strength of 42,000 psi based on a longitudinal wall tensile specimen as specified in the pipe standards ASA A21.51 (AWWA C151) and ASA A21.52. Internal pressures used for calculation of the thicknesses in ASA A21.51 (AWWA C151) included an allowance of 100 psi for surges.

7. *Earth loads.* As stated previously, the deflection of a flexible pipe reduces the earth load to less than that imposed on a more rigid pipe in the same condition, because the sidefills carry a part of the trench load transferred to them by the deflection of the pipe. When the sidefill soil and the pipe have the same degree of rigidity and the pipe is installed in a wide trench, the earth load on the pipe is the weight of the prism of soil directly above the pipe. In narrow trenches the load may be less than the prism load due to the influence of friction forces on the trench walls. In the standard the prism load is used for 18-in. and larger pipe laid in trenches of any width. As the reduction in earth load due to transfer of load to the sidefills is dependent on pipe deflection, it is evident that the deflection and, therefore, the reduction in earth load of the smaller diameter pipe would be less than for larger-diameter pipe. From a study of the relative rigidity of the sidefill soil and pipe of various sizes and thicknesses, it was considered that the prism load is applicable to 18-in. and larger ductile-iron pipe. It was also considered that the deflection of 8-in. and smaller pipe would have no effect on the earth load. Therefore, Marston earth loads for relatively rigid pipe are used for 8-in. and smaller pipe. It was further considered that 10-in. through 16-in. pipe sizes are intermediate between these extremes, and for these sizes the earth load is prorated between the Marston load and the prism load.

In the calculations for earth loads, the unit weight of 120 lb per cubic foot for backfill soil is used. Soil weights generally vary from 110 to 130 lb per cubic foot. Experience has shown that 120 lb per cubic foot is commonly considered to be a conservative value for most installations.

8. *Allowance for truck superload.* In computing ductile-iron pipe thicknesses, truck loads are added to earth loads. The truck superload allowances in ASA A21.1 (AWWA H1) were adopted. These loads in most cases equal or exceed the static load from a single AASHO H-20 truck with 16,000 lb on each rear wheel. These truck superloads are based on having the design depth of cover over the pipe. Consideration should be given to the loads that may be transmitted to the pipe if either truck superloads or heavy construction equipment is permitted to pass over the pipe at less than the design depth of cover.



CAPCO JEN 0020296

prism:

$$W_c = HwB_c \quad (5)$$

Symbols in these equations are explained in Table 7.

a. For 3-in. through 8-in. pipe, the earth load is computed by Marston's method for a trench width equal to nominal pipe diameter plus 2 ft, using Eq 2 or 3, whichever gives the smaller load.

b. For 10-in. through 16-in. pipe, the earth load is computed by Eq 4, prorating between the Marston load for 8-in. pipe, described above, and the prism load for 18-in. pipe, described below.

c. For 18-in. and larger pipe, the earth load is the weight of the prism of soil directly above the pipe computed by Eq 5.

50–4.2. *Truck superloads* ($W_t$): The truck superloads shown in Table 1 are computed by the procedure in Sec. 1–10 of ASA A21.1 (AWWA H1) for two passing trucks with adjacent wheels 3 ft apart and with 9,000 lb on each rear wheel. To the load thus obtained, 50 per cent is added for impact of the trucks moving over a roadway assumed to be unpaved and rough.

50–4.3. *Net thickness required for trench load:* The net design thickness required for trench load is determined from Table 2. The trench load–diameter ratios $\left(\frac{W_c}{D}\right)$ for various $\frac{D}{t}$ ratios shown in Table 2 were computed from Eq 6, which is the formula for the bending stress at the bottom of the pipe:

$$f = \frac{W_c d}{4t^2}\left[K_b - \left(\frac{K_x}{\frac{8Et^3}{E'd^3} + 0.732}\right)\right]. \quad (6)$$

In Eq 6,

$f$ is design bending stress at bottom of pipe (36,000 psi).

$W_c$ is trench load in pounds per linear foot of pipe (earth load plus truck superload).

$d$ is mean diameter of pipe in inches $(D - t)$.*

$D$ is outside diameter of pipe in inches.*

$t$ is net thickness of pipe in inches.

$E$ is modulus of elasticity of pipe metal (24,000,000 psi).

$E'$ is modulus of soil reaction in pounds per square inch (from Table 8).

$K_b$ is bending moment coefficient dependent on bedding angle (from Table 8).

$K_x$ is deflection coefficient dependent on bedding angle (from Table 8).

Tables similar to Table 2 may be compiled for laying conditions other than A or B by assuming a series of diameters and thicknesses and calculating the matching trench loads using Eq 6 with values of $K_b$, $K_x$, and $E'$ appropriate to the bedding and backfill conditions.

### Sec. 50–5—Optional Calculation of Pipe Deflection

The maximum strain in cement linings is limited to a uniform safe value by the 36,000-psi design bending stress. Deflections calculated for 3-in. through 48-in. pipe with thicknesses designed by the above procedure for standard conditions do not exceed 2 per cent of the outside diameter of the pipe, which is well below the deflection that might damage the cement linings. Therefore, it is not usually necessary to calculate deflection as part of the design procedure. If it is desired to calculate the deflection, Eq 7 is used with the

* See Note in Sec. 50–2.1.

CARCO IEN 0020297

cover for a working pressure of 150 psi.

50-3.1—*Step 1—Design for Trench Load for Water or Gas Pipe:*

Earth load from Table 1 = 1,290 lb/lin ft
Truck load from Table 1 = 769 lb/lin ft

Trench load, $W_c$ = 2,059 lb/lin ft.

Divide trench load by outside diameter of pipe:

$$\frac{W_c}{D} = \frac{2,059}{25.80} = 80 \text{ lb/ft/in.}$$

Find $\frac{W_c}{D} = 80$ in Table 2 for Laying Condition B, and read the required value of the diameter-thickness ratio, $\frac{D}{t} = 112$.

TABLE 8

*Design Values of the Bedding Coefficients and Modulus of Soil Reaction*

| Item | Laying Condition | |
|---|---|---|
| | A | B |
| Bedding | flat bottom | flat bottom |
| Backfill | untamped | tamped |
| Bedding angle—*deg* | 30 | 30 |
| $K_4$ | 0.235 | 0.235 |
| $K_x$ | 0.108 | 0.108 |
| $E'$—*psi* | 150 | 300 |

Divide this ratio into the outside diameter of the pipe to obtain net thickness:

$$t = \frac{25.80}{112} = 0.23 \text{ in.}$$

50-3.2—*Step 2—Design for Internal Pressure:*

a. *Water pipe:*

Working pressure = 150 psi
Surge pressure = 100 psi

Design pressure = 250 psi.

Then,

$$t = \frac{250 \times 25.80}{2 \times 16,800} = 0.19 \text{ in.}$$

b. *Gas pipe:*

Working pressure = 150 psi.

Then,

$$t = \frac{150 \times 25.80}{2 \times 16,800} = 0.12 \text{ in.}$$

50-3.3. *Step 3—Selection of net thickness and addition of allowances:* The larger of the thicknesses is given by the design for trench load, Step 1, and therefore 0.23 in. is selected as the net thickness for water or gas pipe.

Net thickness = 0.23 in.
Corrosion allowance = 0.08 in.

Minimum manufacturing thickness = 0.31 in.
Casting tolerance = 0.07 in.

Total calculated thickness = 0.38 in.

50-3.4. *Step 4—Selection of standard thickness:* The total calculated thickness of 0.38 in. is less than the smallest standard thickness shown in Table 6. Therefore, the smallest standard thickness, 0.41 in., Class 1, is selected for specifying and ordering either water or gas pipe.

## Sec. 50-4—Design Theory

This section illustrates determination of earth load ($W_e$), truck superload ($W_t$), and net thickness required for trench load ($W_c$) (*see* Sec. 50-2.1).

50-4.1. *Earth loads* ($W_e$): The earth loads shown in Table 1 are computed by Eq 2, 3, 4, and 5 below:

Marston, projection condition:

$$W_e = C_c w B_c^2 \qquad (2)$$

Marston, ditch condition:

$$W_e = C_d w B_d^2 \qquad (3)$$

Prorated between Marston and prism:

$$W_e = W_s + 0.1(N - 8)(W_{18} - W_s) \qquad (4)$$

CAPCO JEN 0020298