SECURING SHELL INSULATION (cont'd.)

4B2.2 As each course of blocks is applied, the bands shall be put on and drawn tight while the mastic is still soft. (See figure 18) The bands shall be drawn tight enough to close all longitudinal joints but not so tight they cut the insulation.

4C VESSEL SUPPORTS

4C1 TYPES OF SUPPORTS

4C1.1 I BEAM SUPPORTS (figure 19A, B & C)

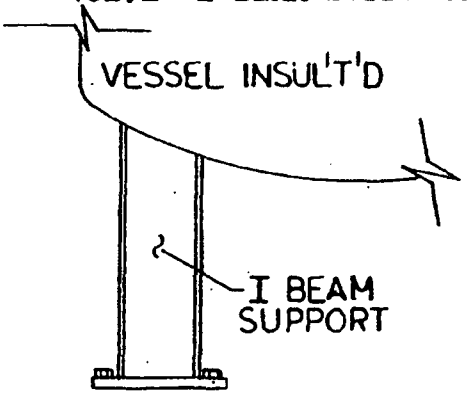

FIGURE 19A

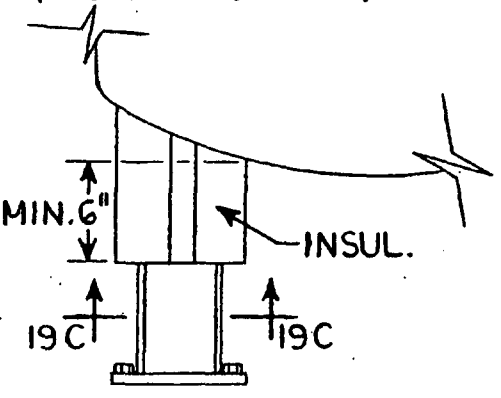

FIGURE 19B

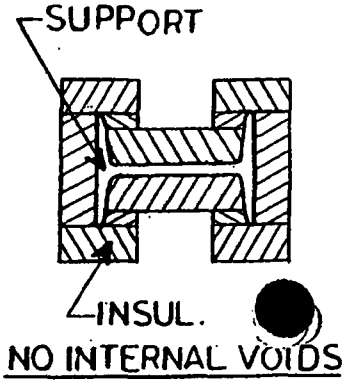

FIGURE 19C

4C1.2 ANGLE SUPPORTS (figure 20A, B & C)

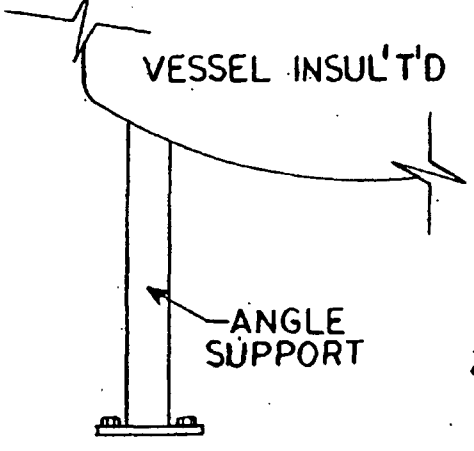

FIGURE 20A

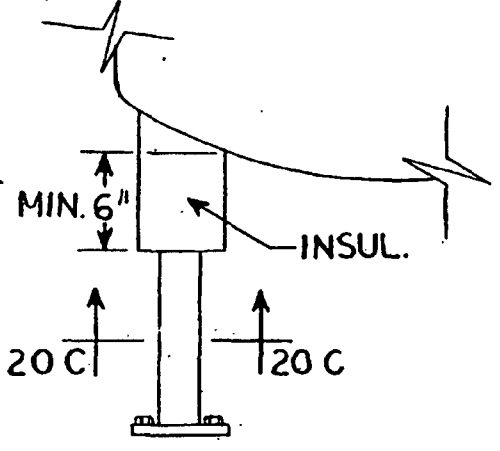

FIGURE 20B

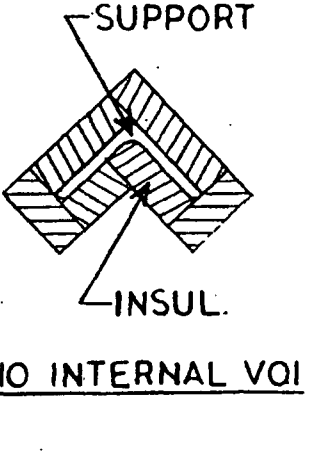

FIGURE 20C