AMERICAN STANDARD

PLAINTIFF'S EXHIBIT

ASI-715

boiler repair parts

CONTENTS

Boiler Model No.	Page No.
ELECTRIC BOILERS	
Electra II	3
Electra	7
GAS BOILERS	
GPM (X)	11
G-2	15
G-40 (3B)	21
G-40 (1B to 2B)	25
G-10	29
GPR	35
GPH-60 & 80	39
GPH-100, 135 & 170	39
G-4	43
G-6	47
G-60	53
1-GA, 1-GA-E	59
2-GA, 2-GA-E	63
4-GA, 4-GA-E	67
1-G, 1-G-E	71
4G	77
OIL BOILERS	
AP & APT	85
A-3, A-3M & FR-A-3	89
PFA-3	93
A-5 & FR-A-5	97
PFA-5	101
A7 & FR-A-7	105
APR	111
APH	115
Arcoloader	119
Arcoliner (Narrow Back) 2B to 4B	123
Arcoliner (Narrow Back) IBN	127
Arcoliner (Wide Back)	127
Arcoliner (Dry Base)	131
Oakmont	135
Severn	139
Exbrook	143
No. 2 Redflash	147
No. 3 Redflash	153
No. 4 Redflash	159
No. 5 Redflash	165
No. 29 Water Tube	171
No. 36 Water Tube	177
No. 92 Ideal	183
Boiler Assembly Rods	186
Miscellaneous Gas & Oil Boiler Repair Parts	187
Jacket Parts	189-204
List Prices	205-212
VP(T)	88A-C
V-3(M)	93A-C

20956

foreword

This catalog comprises a complete and comprehensive list of all available American-Standard boiler parts. Regardless of model, all components are made from original patterns, and are of the same precision design and quality construction as the original parts.

All previous descriptions or list prices for the same items, shown in this catalog, are withdrawn.

Each part is pictured, described, and coded for maximum simplicity and accuracy in ordering. The list price for each part number will be found at the back of this catalog. Adherence to the following ordering procedure will facilitate handling and eliminate error in securing parts.

SPECIFY ON ALL ORDERS:

1. Part number and description as shown in this catalog.
2. Exact series number and boiler size.
3. Exact gas specifications when involved.
4. Quantity of item desired.
5. Method of shipment.

RIGHT-HAND AND LEFT-HAND PARTS:

Right and left hand parts are those on your right or left as you face the front of the unit. The front is the face of the unit which carries the name and number plate.

This catalog has been prepared for the convenience of American-Standard distributors and their heating contractors. The list prices shown do not purport to represent actual resale prices in any particular market.

AMERICAN STANDARD

Copyright 1969 American-Standard, Inc.

Form No. 9100-2

Litho in U.S.A.

BOILER RATINGS

The net I=B=R boiler ratings represent the maximum net loads that may be connected to the boilers. The net I=B=R steam ratings are based on a piping and pickup allowance of 1.333 except where an appropriate piping and pickup column is shown. Steam sq. ft. ratings are based on 240 Btuh per sq. ft. The net I=B=R water ratings in Mbh are based on a piping and pickup factor of 1.15. Water sq. ft. ratings are based on 150 Btuh (170° water) per sq. ft. For installations having unusual piping and pickup requirements, American-Standard should be consulted before selecting a boiler.

For forced hot water heating systems where the boiler and piping are within the area to be heated, the boiler may be selected on the basis of its gross output.

Sufficient radiation must be installed for the requirements of the building to be served.

In order to select the proper size boiler, calculate the heat loss of the building, then divide this figure by 1,000 to get the heat loss expressed in Mbh. Select a steam or water boiler which has a net I=B=R Mbh rating equal to or greater than this figure using the appropriate steam or water column.

See current literature for determining the size of radiators and convectors for hot water systems.

GAS FIRED BOILERS

American-Standard Gas boilers are design certified by the American Gas Association.

Ratings shown are for installation at sea level and at elevations up to 2,000 feet. For altitudes above 2,000 feet, ratings should be reduced at the rate of 4% for each 1,000 feet above sea level.

OIL FIRED BOILERS

The firing rates or I=B=R burner capacities — gallons per hour—are based on the use of oil having 140,000 Btu per gallon heat value.

STOKER FIRED BOILERS

The firing rates or I=B=R burner capacities—pounds per hour—are based on the use of coal having 13,000 Btu per pound heat value.

HAND FIRED BOILERS

The ratings are based on the use of stove or nut size bituminous coal, anthracite coal or coke with 13,000 Btu per pound heat value. See table below for selecting proper size boiler when using coal with less than 13,000 Btu per pound.

BUILT-IN TANKLESS WATER HEATERS for G-2 Water, G-40, G-10 Water, FR-A-3, A-3, FR-A-5, and A-5

All tankless type built-in water heaters are rated in gallons per minute on the basis of a minimum boiler water temperature of 200°F. The maintaining of 200°F boiler water temperature with rated flow through a tankless type built-in water heater is dependent on the output of the boiler. Increase the boiler size 12 Mbh for each bathroom in excess of two.

In those areas where excessive lime exists in the water, use of built-in tankless type water heater is not recommended except when provision is made for regularly cleaning the heater.

EXTERNAL WATER HEATERS FOR AMERICAN-STANDARD STEAM BOILERS

External tank or tankless type heaters can be connected to all American-Standard Steam boilers when provision is made in the supply and return piping of the heating system.

When an external tank type heater is used and the domestic demand exceeds 75 gallons in a 24 hour period, increase the boiler size 120 Btuh for each gallon of storage tank capacity.

When an external tankless type heater is used, increase the boiler size 12 Mbh for each bathroom in excess of two.

(Note: G-10 Steam boilers can be provided with external water heater tappings for water to water heat exchangers. See G-10 optional equipment pages for price and availability. A-7 boilers are regularly provided with tappings for external water to water heat exchangers.)

WHERE COAL HAS LESS THAN 13,000 BTU CONTENT

When selecting hand fired boilers for burning coal of lower heating value than 13,000 Btu per pound the following correction factors should be used. Multiply the net load by the proper factor and select the boiler with the corresponding rating (installed radiation sq. ft.).

heating value of coal	correction factor	heating value of coal	correction factor
13,000	1.00	10,500	1.24
12,500	1.04	10,000	1.30
12,000	1.08	9,500	1.37
11,500	1.13	9,000	1.44
11,000	1.18		

INSTRUCTIONS FOR ORDERING GAS BOILERS:

Specify complete boiler number.

Specify type of gas (if LP gas, whether butane or propane), Btu (heat value of gas), specific gravity.

Specify elevation at point of installation if in excess of 2,000 feet and indicate barometric pressure.

Specify optional equipment in detail.

REPAIR PARTS — TRADE PRICES

Boilers (all fuels) ..... List Price, less 25%

Gas Conversion Burners ..... List Price, less 25%

For List Prices see "American-Standard Radiator Heating Repair Parts Catalog" 1965 Edition.

Oil Burners ..... List Price, less 25%

For List Prices see "American-Standard Arcoflame Oil Burner Repair Parts Catalog" 1966 Edition.

This Price List has been prepared for the convenience of American-Standard distributors and their trade customers only. The trade prices shown represent fixed markups over distributor prices to reflect reasonable selling and distribution expense and do not purport to represent actual prices prevailing in any particular market.

"ELECTRA"

Underwriters Laboratories Inc.
LISTED
ELECTRIC CENTRAL HEATING BOILER
WITH INTEGRAL LIMIT CONTROL
E38076 No 000 000

EP PACKAGED ELECTRO-HYDRONIC BOILER

For the ultimate in modern electric heating, choose the "Electra," a completely assembled, pre-wired, hydronic heating cast iron boiler.

Designed for ultra-safe operation and equipped with controls for forced circulation.

Attractive two-toned brown and beige jacket completely conceals all components including the circulating pump and expansion tank.

Rugged boiler shell is tested and equipped for 30 lbs. water working pressure and unit is arranged for 240 volt, three wire, 60 cycle, single phase service.

WATER

packaged boiler number	number of elements	output watts	output btuh ■	amps @ 240 volts	Trade Price with standard equipment	approx. shipping weight
EP-34	2	10,000	34,130	41.7	$330.00	88
EP-51	3	15,000	51,195	62.4	342.00	90
EP-68	4	20,000	68,260	83.2	355.00	91
EP-82	5	24,000	81,912	100 0	369.00	93

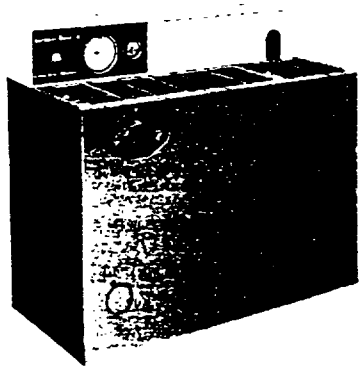

Ordering Example:
EP Packaged Boiler
with standard equipment:
1 EP-68 boiler

Standard equipment

T822D thermostat

AT72D low voltage transformer

R8154 sequencing control

L4008A adjustable immersion type limit control

Allen-Bradley 836CP11-HKAZS High pressure switch

J. W. Hobbs M4440 Low pressure switch

1¼" circulator

Expansion tank (diaphragm type)

Automatic air vent

ASME Relief valve

Pressure and temperature gauge

Indicator lights

Drain valve

Note: EP Electric Boilers are shipped with jacket and all controls (except thermostat and relief valve) factory installed and wired. Circulator and expansion tank are factory installed and enclosed in the jacket. Thermostat, relief valve and nipple, and circulator flange and gasket shipped in accessory bag fastened inside boiler carton.

■Output ratings based on 240 volts. Reduced output ratings for other voltages are as follows: 230 volts, 8%; 220 volts, 16%; 208 volts, 25%.

Optional equipment

Sequencer Package: Available for field installation on EP-68 and EP-82 Boilers in addition to regularly furnished sequencing relay. Package contains all necessary equipment and instructions for the installation of one (EP-68) or two (EP-82) 24A11-4 Sequencer(s) which will provide a 45 second current delay between the third and fourth elements of the EP-68 or between the third, fourth and fifth elements of the EP-82. Standard R8154 relay provides a 1/120th of a second (½ cycle) current delay between each element.

Sequencer Package	Trade Price
EP-68	$10.00
EP-82	19.25

This Price List has been prepared for the convenience of American-Standard distributors and their trade customers only. The trade prices shown represent fixed markups over distributor prices to reflect reasonable selling and distribution expense and do not purport to represent actual prices prevailing in any particular market.

GPH PACKAGED GAS BOILERS

The industry leader in compact, low cost, easy to install cast iron residential boiler with big boiler capabilities.

Completely factory assembled and pre-wired, this high styled brown and beige square jacketed boiler features top rated controls for forced circulation operation.

The exclusive THERM-O-GRID sections have a built-in air-separator in the top section of the assembly and are tested for 50 lbs. water working pressure.

Although regularly furnished for 115 volt, 60 cycle current supply with 24 volt control system, self-energizing controls are optional at no extra charge.

All GPH boilers are A.G.A. design certified for combustible floor and closet installations.

Ratings shown are for installations at sea level and up to 2,000 feet.

WATER — for Natural and Mixed Gas

controls arranged for 100% shut-off

packaged boiler number	A.G.A. input Mbh	A.G.A. output Mbh	net I=B=R rating Mbh	net rating sq ft water	Trade Price with standard equipment	chimney size: inside diam. in.	chimney size: height feet	approx. shipping weight
GPH-60	75	60	52.2	348	$254.00	5	10	190
GPH-80	100	80	69.6	464	275.00	5	10	225
GPH-100	125	100	87.0	580	309.00	6	10	315
GPH-135	169	135	117.4	783	371.00	7	10	360
GPH-170	213	170	147.8	985	433.00	7	10	400

WATER — for Propane and Butane Gas

controls arranged for 100% shut-off

GPH-60	75	60	52.2	348	$254.00	5	10	190
GPH-80	100	80	69.6	464	275.00	5	10	225
GPH-100	120	96	83.5	556	309.00	6	10	315
GPH-135	160	128	111.3	742	371.00	7	10	360
GPH-170	200	160	139.1	927	433.00	7	10	400

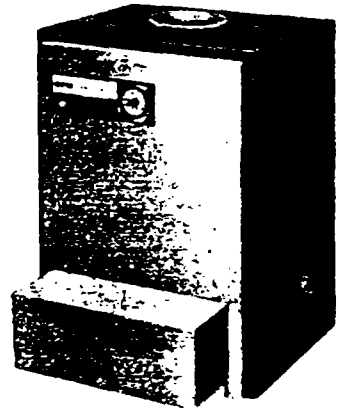

Standard equipment

GPH-60 thru 170 (All Gases)

V81 Series Lite Rite manifold gas valve including main operator, manual shut-off valve, pilot filter, pressure regulator (except for LP gas) and Pilotstat.

T822D thermostat	ASME relief valve, 30 lb.	AT30 Transformer (except S.E.)
Circulator	Draft hood	Pressure and temperature gauge
Drain valve	Wiring harness	L4080B adjustable immersion type limit control and AY-553R limit control

Note: Shipped with jacket, all controls (except thermostat), circulator, main burners and manifold controls and piping factory installed and wired. Thermostat and relief valve shipped in accessory box fastened inside boiler crate. Draft hood shipped separately.

Optional equipment

Self-energizing controls (consist of VS81 Series gas valve, TS822A thermostat, Q313A Thermopile Generator, L4080B and AY-552R limit control) for all gases listed above, available when specified on order at no additional charge.

L4081B (24V. and S.E.) combination adjustable limit and circulator control ..... Add $8.02

L8048F (24V.) or L8048B (S.E.) combination limit/relay control Add $6.46

Conversion kit from natural to propane gas ..... Trade Price $4.25

Note: In areas where manual opening feature is normally desired, GPH boilers are furnished with self-energizing controls as shown above.

Ordering Examples:

1. Packaged boiler with standard equipment:
   1 GPH-135 boiler
   Nat. gas, 1000 Btu, .6 sg.
2. Packaged boiler with optional equipment:
   1 GPH-100 boiler
   with self-energizing controls
   Propane Gas

Notes:

For ordering instructions, see page 2.
For complete information on boiler ratings, see page 2.
For discount on repairs, see page 2.

This Price List has been prepared for the convenience of American-Standard distributors and their trade customers only. The trade prices shown represent fixed markups over distributor prices to reflect reasonable selling and distribution expense and do not purport to represent actual prices prevailing in any particular market.

G-2 PACKAGED GAS BOILERS

Fully packaged and pre-wired and equipped with controls for forced circulation, the G-2 is a quality, time-proven cast iron gas fired boiler available with and without tankless heater for domestic water requirements.

This modern deluxe jacketed boiler features the patented "Eliminaire" (cast-in air separator in the left end section) and the distinctive American-Standard brown and beige jacket color combination to dress up any basement or utility room.

The boiler is tested and equipped for 30 lbs. water working pressure and is regularly furnished for 115 volt, 60 cycle current supply with 24 volt control system. Self-energizing controls are available without extra cost.

Ratings shown are for installation at sea level and up to 2,000 feet.

WATER—Controls arranged for 100% shut-off

packaged boiler number	A.G.A. input Mbh	A.G.A. output Mbh	tankless heater number	▲ I=W=H rating	net I=B=R rating Mbh	net rating sq ft water	Trade Price with standard equipment	chimney size		approx. shipping weight
	Nat., Mixed and LP Gas							inside diam. in.	height feet	
Packaged boilers with factory installed tankless heater										
G-24-DPT	90	72	218	2½	62.6	417	$410.00	5	10	390
G-25-DPT	120	96	222	3	83.5	556	456.00	5	10	470
G-26-DPT	150	120	222	3¼	104.3	695	502.00	6	10	550
G-27-DPT	180	144	222	3½	125.2	834	543.00	6	10	642
Packaged boilers less heater										
G-23-DP	60	48	. . .	. . .	41.7	278	$320.00	4	10	315
G-24-DP	90	72	. . .	. . .	62.6	417	376.00	5	10	375
G-25-DP	120	96	. . .	. . .	83.5	556	420.00	5	10	455
G-26-DP	150	120	. . .	. . .	104.3	695	466.00	6	10	540
G-27-DP	180	144	. . .	. . .	125.2	834	507.00	6	10	630

▲Gallons of water per minute heated from 40F to 140F with 200F boiler water temperature.

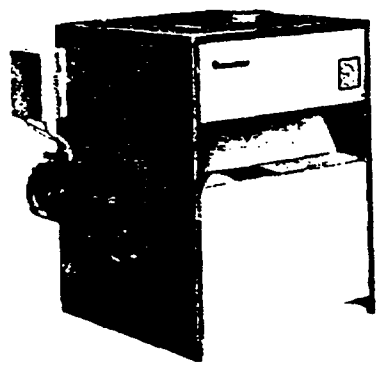

Ordering Examples:

1. Packaged boiler less heater with standard equipment:
   1 G-24-DP boiler
   Nat. gas, 1000 Btu, .6 sg.
2. Packaged boiler with factory installed heater with optional equipment:
   1 G-26-DPT boiler with ribbon burners and Nat. to LP conversion kit.
   Nat. gas, 1000 Btu, .6 sg.

Notes:

For ordering instructions, see page 2.
For complete information on boiler ratings, see page 2.
For discount on repairs, see page 2.

Standard equipment

V81 Series Lite Rite manifold gas valve including main operator, manual shut-off valve, pilot filter, pressure regulator (except LP gas) and Pilotstat.

Circulator with piping
ASME relief valve
Draft hood (for G-23 only, shipped in separate carton)
Pressure and temperature gauge
Wiring harness
AT30 transformer (24V. less heater boilers only)

Additional standard equipment for boilers with heater

Tankless heater as listed above
T822D (24V.) or TS822A (S.E.) thermostat
L8024E (24V.) or L8024B (S.E.) triple Aquastat relay

Additional standard equipment for boilers less heater

T822D (24V.) or TS822A (S.E.) thermostat
L4081B (24V. and S.E.) combination high limit and circulator control
Note: Left hand end section less tankless heater opening

Note: Shipped with jacket, all controls (except thermostat), circulator and piping, main burners and manifold controls and piping factory installed and wired. Thermostat, manual main gas and pilot gas shut-off valves (when required) and relief valve shipped in accessory box fastened inside boiler crate.

Optional equipment

Self-energizing controls (consist of VS81 Series gas valve, TS822A thermostat, Q313 Thermopile Generator and limit or combination control as noted above) for all gases, available when specified on order ... no charge

L8048F (24V.) or L8048B (S.E.) combination limit/relay in lieu of L4081B furnished on G-2 DP boilers ..... no charge

Natural to LP gas conversion kits. Order boiler "with ribbon burners" and "Natural to LP conversion kit": ..... G-23 thru G-27 Trade Price $5.00
G-28 thru G-211 Trade Price $6.75

Floor shield for combustible flooring. Add suffix letter "C" to boiler number add $3.00

Note: In areas where manual opening feature is desired, G-2 boilers are furnished with self-energizing controls as listed above.

This Price List has been prepared for the convenience of American-Standard distributors and their trade customers only. The trade prices shown represent fixed markups over distributor prices to reflect reasonable selling and distribution expense and do not purport to represent actual prices prevailing in any

G-2 PACKAGED GAS BOILERS

For steam installation on new work or modernization, the G-2 Packaged Steam boiler is available with either Flush or Deluxe jacket in the smart and attractive brown and beige combination that labels it an American-Standard top performing cast iron boiler.

This model is factory assembled and pre-wired for 115 volt, 60 cycle current supply with 24 volt control system. Where required, self-energizing controls are furnished without extra charge.

Ratings shown are for installations at sea level and up to 2,000 feet.

STEAM—Controls arranged for 100% shut-off

packaged boiler number	A.G.A. input Mbh	A.G.A. output Mbh	net I=B=R rating		Trade Price with standard equipment		chimney size		approx. shipping weight
	Nat., Mixed and LP Gas		Mbh	sq ft	flush jacket	deluxe jacket	inside diam. in.	height feet	
G-23-SP*	60	48	36	150	$268.00	$282.00	4	10	332
G-24-SP*	90	72	54	225	325.00	339.00	5	10	392
G-25-SP*	120	96	72	300	373.00	387.00	5	10	472
G-26-SP*	150	120	90	375	419.00	433.00	6	10	557
G-27-SP*	180	144	108	450	459.00	473.00	6	10	648

*Substitute letter "F" for flush or "D" for deluxe jacket.

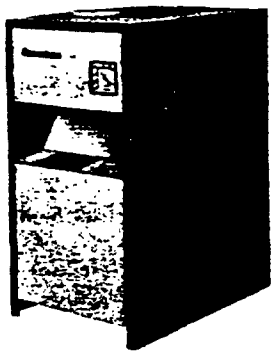

Ordering Examples:

1. Packaged boiler with standard equipment:
   1 G-26-SPD boiler
   Nat. gas, 1000 Btu, .6 sg.
2. Packaged boiler with optional equipment:
   1 G-24-SPD boiler with self-energizing controls
   Nat. gas, 1000 Btu, .6 sg.

Notes:

For ordering instructions, see page 2.
For complete information on boiler ratings, see page 2.
For discount on repairs, see page 2.

Standard equipment

V81 Series Lite Rite manifold gas valve including main operator, manual shut-off valve, pilot filter, pressure regulator (except LP gas) and Pilotstat.

No. 67-GAR (24V. and S.E.) low water cut-off
Gauge glass with trimmings
Draft hood (for G-23-D and G-23-F thru G-27-F, shipped in separate carton)
T822D (24V.) or TS822A (S.E.) thermostat
PA404A (24V. and S.E.) pressure limit control
AT30 transformer (except S.E.)
ASME safety valve
Steam gauge
Floor pan

Note: Shipped with jacket, all controls (except those noted below), main burners and manifold controls factory installed and wired. Thermostat, low water cut-off, manual main and pilot gas shut-off valves (when required), safety valve and steam limit control shipped in accessory box fastened inside boiler crate.

Optional equipment

Self-energizing controls (consist of VS81 Series gas valve; Q313 Thermopile Generator; thermostat and limit control as noted above) for all gases, available when specified on order ..... no charge

No. 101-24V. electric water feeder is available for addition to the No. 67-GAR to provide a low water cut-off and feeder combination control
add $45.60

Natural to LP gas conversion kits. Order boiler "with ribbon burners" and "Natural to LP conversion kit": G-23 thru G-27 ..... Trade Price $5.00

Note: In areas where manual opening feature is desired, G-2 boilers are furnished with self-energizing controls as listed above.

This Price List has been prepared for the convenience of American-Standard distributors and their trade customers only. The trade prices shown represent fixed markups over distributor prices to reflect reasonable selling and distribution expense and do not purport to represent actual prices prevailing in any particular market.

G-2 PACKAGED ALL-PURPOSE GAS BOILERS

Versatile and packed with pluses. Can be used for forced circulation or gravity installations. Completely factory assembled, pre-wired and crated with Deluxe brown and beige style leading jacket. Patented "Eliminaire" ends air problems.

Tested and equipped for 30 lbs. water working pressure and regularly furnished for 115 volt, 60 cycle current supply with 24 volt control system. Self-energizing controls available at no added charge.

Ratings shown are for installation at sea level and up to 2,000 feet.

WATER—Controls arranged for 100% shut-off.

packaged boiler number	A.G.A. input Mbh	A.G.A. output Mbh	net I=B=R rating Mbh	net rating sq ft water	Trade Price with standard equipment less thermostat	chimney size		approx. shipping weight
	Nat., Mixed and LP Gas					inside diam. in.	height feet	
G-23-DPG	60	48	41.7	278	$232.00	4	10	317
G-24-DPG	90	72	62.6	417	289.00	5	10	377
G-25-DPG	120	96	83.5	556	337.00	5	10	457
G-26-DPG	150	120	104.3	695	381.00	6	10	542
G-27-DPG	180	144	125.2	834	420.00	6	10	632

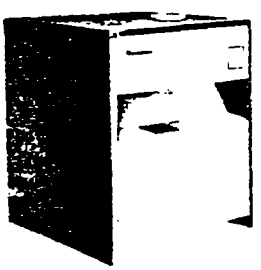

Standard equipment

V81 Series Lite Rite manifold gas valve including main operator, manual shut-off valve, pilot filter, pressure regulator (except LP gas) and Pilotstat.

L4080B (24V. and S.E.) immersion limit control
ASME relief valve
Pressure and temperature gauge
AT30 transformer (except S.E.)
Draft hood (for G-23-DPG only shipped in separate carton)

Note: Shipped with all controls, main burners and manifold controls factory installed and wired. Manual main gas and pilot gas shut-off valves (when required) and relief valve shipped in accessory box fastened inside boiler crate.

Ordering Examples:

1. Packaged all-purpose boiler with standard equipment:
   1 G-25-DPG boiler
   Nat. gas, 1000 Btu, .6 sg.
2. Packaged all-purpose boiler with optional equipment:
   1 G-26-DPG boiler
   with self-energizing controls
   Nat. gas, 1040 Btu, .65 sg.

Notes:

For ordering instructions, see page 2.

For complete information on boiler ratings, see page 2.

For discount on repairs, see page 2.

Optional equipment

Self-energizing controls (consist of VS81 Series gas valve; Q313 Thermopile Generator and limit control as noted above) for all gases, available when specified on order ..... no charge

Natural to LP gas conversion kits. Order boiler with "ribbon burners" and "Natural to LP conversion kit": ..... Trade Price $5.00

Note: In areas where manual opening feature is desired, G-2 boilers are furnished with self-energizing controls as listed above.

Thermostats for 24V. and S.E. control systems are available. For prices see page 30.

This Price List has been prepared for the convenience of American-Standard distributors and their trade customers only. The trade prices shown represent fixed markups over distributor prices to reflect reasonable selling and distribution expense and do not purport to represent actual prices prevailing in any particular market.

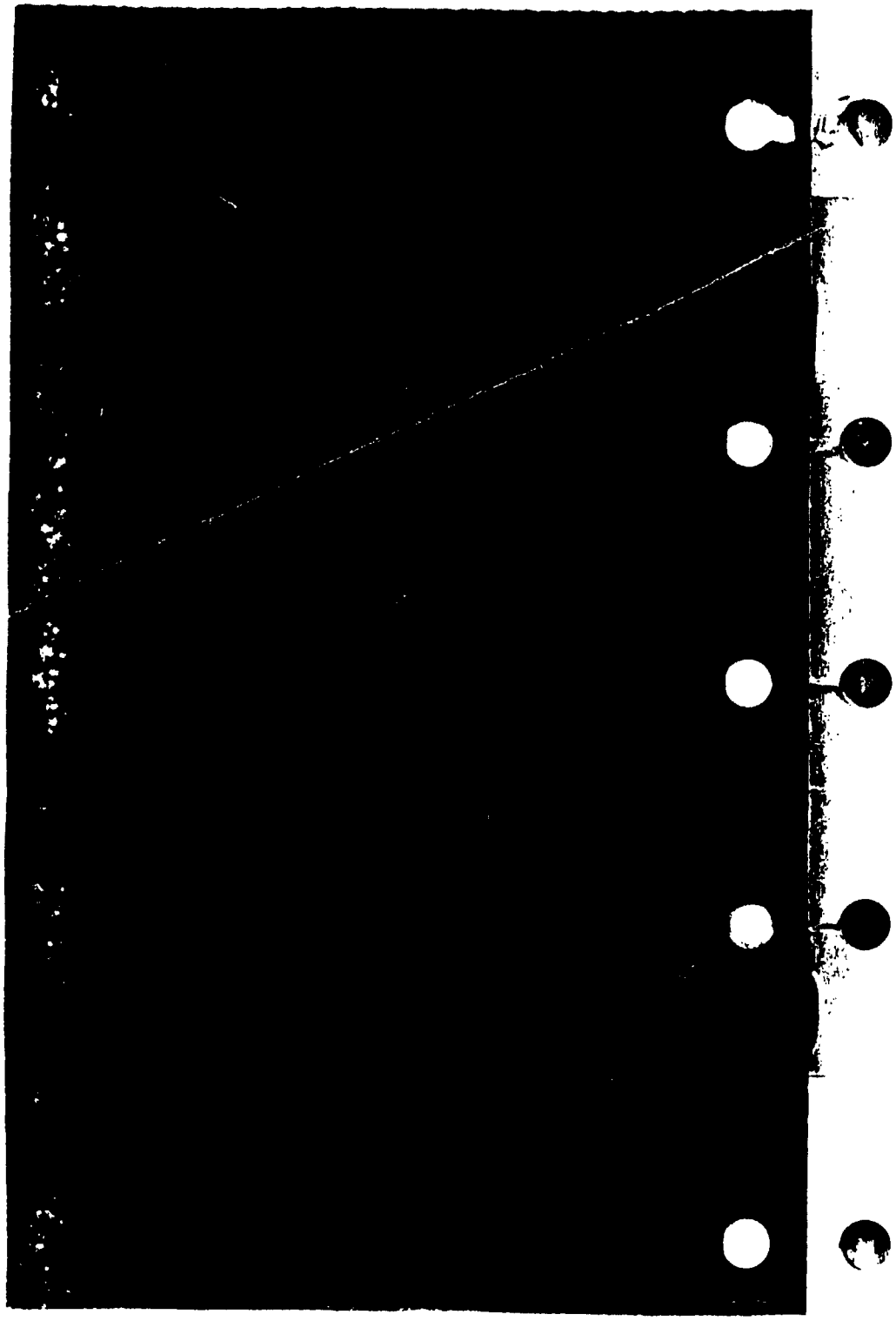

INDEX

20964

	Page
Boiler Ratings	1 to 4
[illegible] and External Water Heaters	5, 6
	7
	8, 9
	's
	10, 11
	2, 13, 14
	15
	16, 17
	18, 19
	20, 21
	22, 23
	24, 25
	26, 27
	28, 29
	30
	31
	32, 33
	34, 35
	36
	36
	37
	37
	38
Type 1-GA Standard	39
Type 2-GA Standard	39
Type 4-GA Standard	40
Type 1-G Standard	40
Type 4-G Standard	41, 42
Empire and Standard Flue Recommendations	42
Gas Conversion Burners	43

IMPORTANT

For Ratings and Data for Arco Cast Iron Convectors, Arco Multifin Convectors and American Enclosures, use information shown in Form 696 (Cast Iron Convectors) and Form 727 (Multifin Convectors and Enclosures), for types and sizes available, in place of information shown on pages 65 to 75 and pages 83 to 85 of this book.

American Radiator & Standard Sanitary Corporation

INDEX

	Page
Arcoflame Oil Burners	44 to 50
Water Heaters	
Budget Gas Fired Water Heater	51
Gas Boilers for Hot Water Supply	52, 53, 54
Dome Type Water Heater	55
Scuttle-A-Day Water Heater	55
Radiators and Convectors	
Arco Radiator	56, 57
Sunrad Radiator	58 to 61
Baseboard Radiant Panel	62, 63, 64
Arco Cast Iron Convector	65 to 68
Arco Multifin Convector	69, 70
Arco Multifin "Stock Model Convector"	71, 72
Arco Convectors — Dimensions	73
Arco Convectors — Typical Piping Diagrams	74
Arco Convectors — Standard Connections	75
Arco Enclosures	
Type NFS	76
Type PF	77
Type W	78
Type SW	79
Type OF and OFC	80
Type FC	81
Type FP	82
Type OK	83
Optional Features, Arco Enclosures	84, 85
Peerless Wall Radiators	86, 87
Peerless Bathroom Radiators	88
Air Valve Tappings and Threads of Tappings	88
How to Determine Size of Radiators and Convectors for Hot Water Systems	89
Radiator Pedestals	90
Radiator Brackets	90 to 93
Roughing-in Dimensions — Radiator Valves	94
Selection Chart — Radiator Valves, Etc.	95
Excelso Direct and Indirect Water Heaters	96

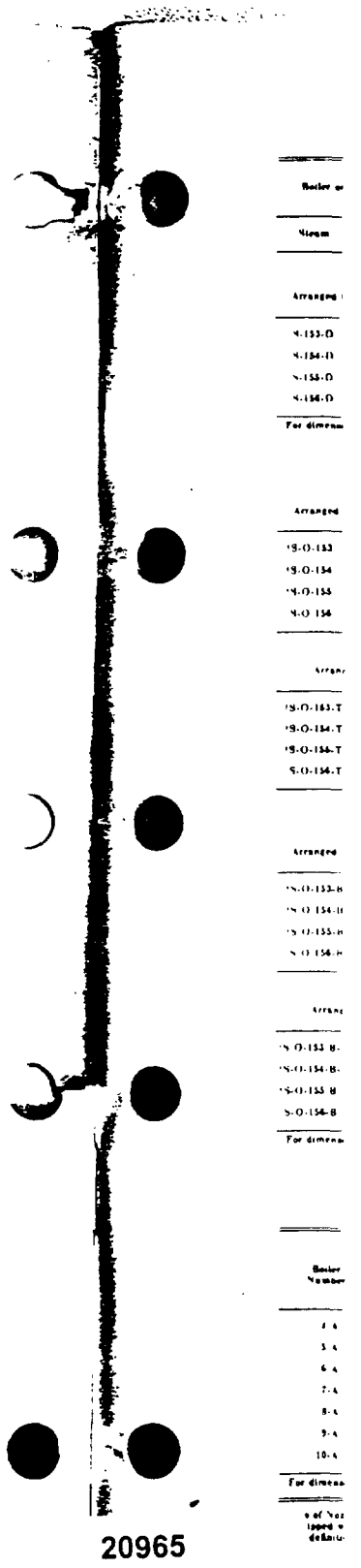

20965

INDEX

	Page
Boiler Ratings	1 to 4
Data on Biltin and External Water Heaters	5, 6
Boiler Trimmings and Sundries	7
Definition of Ratings	8, 9
Measurements, Tappings and Assemblages of American Boilers	
Arcoliner (Dry Base) Boiler	10, 11
Arcoliner (Wet Base) Boiler	12, 13, 14
Arcola Water Boiler	15
Severn Boiler	16, 17
Oakmont Boiler	18, 19
Exbrook Boiler	20, 21
No. 2 Redflash Boiler	22, 23
No. 3 Redflash Boiler	24, 25
No. 4 Redflash Boiler	26, 27
No. 5 Redflash Boiler	28, 29
Ashpit Dimensions — Redflash Boilers	30
Arrangements of Grate Bars — Redflash Boilers	31
No. 29 Water Tube Boiler	32, 33
No. 36 Water Tube Boiler	34, 35
Gas Boilers	
Type 1-GA-E Empire	36
Type 2-GA-E Empire	36
Type 4-GA-E Empire	37
Type O-GS-E Empire	37
Type 1-G-E Empire	38
Type 1-GA Standard	39
Type 2-GA Standard	39
Type 4-GA Standard	40
Type 1-G Standard	40
Type 4-G Standard	41, 42
Empire and Standard Flue Recommendations	42
Gas Conversion Burners	43

RATINGS AND DATA

ARCOLINER BOILER (Dry Base)
COAL (HAND FIRED)
Arranged for Bilt-Rite Taco Tank Type Water Heaters Nos. 701 and 702 On Steam Boilers Only

Boiler or Unit Number		*Installed Radiation Sq. Ft.		Firing Rate (Gal. per Hour or Lbs. per Hour)	Chimney	
Steam	Water	Steam	Water		Size Inches	Height Feet
S-153-D	W-153-D	190	290		8x 8	20
S-154-D	W-154-D	270	430		8x 8	25
S-155-D	W-155-D	370	590		8x 8	30
S-156-D	W-156-D	460	740		8x12	35

For dimensions, tappings and assemblages see pages 10 and 11.

ARCOLINER BOILER (Wet Base)
OIL FIRED
Arranged for Bilt-Rite Taco Tank Type Water Heaters Nos. 701 and 703 (after on 5 and 6 Sec. Water Boilers only)

*S-O-153	*W-O-153	260	420	1 0	8x8	20
*S-O-154	*W-O-154	360	580	1 3	8x8	20
*S-O-155	*W-O-155	450	720	1 5	8x8	25
S-O-156	W-O-156	520	835	1 8	8x8	25

Arranged for Bilt-Rite Taco Tank Type Water Heater No. 587 and Tankless Water Heater No. 589

*S-O-153-T	*W-O-153-T	260	420	1 25	8x8	20
*S-O-154-T	*W-O-154-T	360	580	1 3	8x8	20
*S-O-155-T	*W-O-155-T	450	720	1 5	8x8	25
S-O-156-T	W-O-156-T	520	835	1 8	8x8	25

OIL HEATING UNIT
Arranged for Bilt-Rite Taco Tank Type Water Heaters Nos. 701 and 703 (after on 5 and 6 Sec. Water Boilers only)

*S-O-153-B	*W-O-153-B	260	420	1 0	8x8	20
*S-O-154-B	*W-O-154-B	360	580	1 25	8x8	20
*S-O-155-B	*W-O-155-B	450	720	1 50	8x8	25
S-O-156-B	W-O-156-B	520	835	1 75	8x8	25

Arranged for Bilt-Rite Taco Tank Type Water Heater No. 587 and Tankless Water Heater No. 589

*S-O-153-B-T	*W-O-153-B-T	260	420	1 25	8x8	20
*S-O-154-B-T	*W-O-154-B-T	360	580	1 35	8x8	20
*S-O-155-B-T	*W-O-155-B-T	490	720	1 5	8x8	25
S-O-156-B-T	W-O-156-B-T	520	835	1 75	8x8	25

For dimensions, tappings and assemblages see pages 12, 13 and 14

ARCOLA WATER BOILER
COAL (HAND FIRED)

Boiler Number	*Installed Radiation Sq. Ft.	Radiating Surface of Boiler Sq. Ft.	Chimney	
			Diameter Inches	Height Feet
4-A	120	45	8	20
5-A	170	50	8	20
6-A	220	55	8	25
7-A	270	60	8	25
8-A	320	65	8	25
9-A	370	70	8	30
10-A	420	75	8	30

For dimensions, tappings and assemblages see page 15.

Boiler or Unit Number		*Installed Radiation Sq. Ft.		Firing Rate (Gal. per Hour or Lbs. per Hour)	Chimney	
Steam	Water	Steam	Water		Size Inches	Height Feet
S-17	W-17	350	560		8x 8	30
S-21	W-21	450	720		8x 8	30
S-25	W-25	550	880		8x12	35
S-29	W-29	630	1,010		8x12	35
S-33	W-33	710	1,140		8x12	40
S-37	W-37	790	1,250		12x12	43

SEVERN BOILER
COAL (HAND FIRED)
Arranged for Bilt-Rite Taco Tank Type Water Heaters Nos. 701, 702 and 703 on Steam Boilers only

OIL FIRED
Arranged for Bilt-Rite Taco Tank Type Water Heater No. 703

*S-17-O	*W-17-O	400	640	1 5	8x 8	20
*S-21-O	*W-21-O	460	740	1 7	8x 8	25
*S-25-O	*W-25-O	520	830	1 9	8x 8	25
S-29-O	W-29-O	600	960	2 2	8x12	25
S-33-O	W-33-O	690	1,100	2 5	8x12	30
S-37-O	W-37-O	780	1,250	2 8	8x12	30

Arranged for Bilt-Rite Taco Tank Type Water Heaters Nos. 594 and 595 and Tankless Water Heater No. 590

*S-17-O-T	*W-17-O-T	400	640	1 5	8x 8	20
*S-21-O-T	*W-21-O-T	460	740	1 7	8x 8	25
*S-25-O-T	*W-25-O-T	520	830	1 9	8x 8	25
S-29-O-T	W-29-O-T	600	960	2 2	8x12	25
S-33-O-T	W-33-O-T	690	1,100	2 5	8x12	30
S-37-O-T	W-37-O-T	780	1,250	2 8	8x12	30

OIL HEATING UNIT
Arranged for Bilt-Rite Taco Tank Type Water Heater No. 703

*S-17-OB	*W-17-OB	400	640	1 5	8x 8	20
*S-21-OB	*W-21-OB	460	740	1 75	8x 8	25
*S-25-OB	*W-25-OB	520	830	2 0	8x 8	25
S-29-OB	W-29-OB	600	960	2 25	8x12	25
S-33-OB	W-33-OB	690	1,100	2 5	8x12	30
S-37-OB	W-37-OB	780	1,250	2 75	8x12	30

Arranged for Bilt-Rite Taco Tank Type Water Heaters Nos. 594 and 595 and Tankless Water Heater No. 590

*S-17-OB-T	*W-17-OB-T	400	640	1 5	8x 8	20
*S-21-OB-T	*W-21-OB-T	460	740	1 75	8x 8	25
*S-25-OB-T	*W-25-OB-T	520	830	2 0	8x 8	25
S-29-OB-T	W-29-OB-T	600	960	2 25	8x12	25
S-33-OB-T	W-33-OB-T	690	1,100	2 5	8x12	30
S-37-OB-T	W-37-OB-T	780	1,250	2 75	8x12	30

STOKER FIRED
Arranged for Bilt-Rite Taco Tank Type Water Heater No. 703

SC-17	WC-17	400	640	16	8x 8	20
SC-21	WC-21	460	740	19	8x 8	25
SC-25	WC-25	520	830	21	8x 8	25
SC-29	WC-29	600	960	24	8x12	25
SC-33	WC-33	690	1,100	27	8x12	30
SC-37	WC-37	780	1,250	31	8x12	30

Arranged for Bilt-Rite Taco Tank Type Water Heaters Nos. 594 and 596

SC-17-T	WC-17-T	400	640	16	8x 8	20
SC-21-T	WC-21-T	460	740	19	8x 8	25
SC-25-T	WC-25-T	520	830	21	8x 8	25
SC-29-T	WC-29-T	600	960	24	8x12	25
SC-33-T	WC-33-T	690	1,100	27	8x12	30
SC-37-T	WC-37-T	780	1,250	31	8x12	30

For dimensions, tappings and assemblages see pages 16 and 17.

*Size of Nozzle Gallons per Hour.
†Equipped with Cleaver Brooks Burner.
‡For definition of "Installed Radiation" see page 6.

For data on trimmings see page 7.
For data on Bilt-Rite Taco Water Heaters see pages 5 and 6

20967

RATINGS AND DATA

Boiler or Unit Number		*Installed Radiation Sq. Ft.		Firing Rate Gal. per Hour or Lbs. per Hour	Chimney	
Steam	Water	Steam	Water		Size Inches	Height Feet
OAKMONT BOILER						
OIL FIRED						
Arranged for Bilt-Rite Taco Tank Type Water Heaters Nos. 598 and 599 and Tankless Water Heaters Nos. 583 and 585						
†S-84	†W-84	390	625	1 6	8x8	20
†S-85	†W-85	480	770	1 7	8x8	25
S-86	W-86	560	895	2 0	8x8	25
S-87	W-87	640	1,025	2 3	8x12	30
S-88	W-88	730	1,170	2 5	8x12	30
S-89	W-89	810	1,295	2 9	8x12	35
OIL HEATING UNIT						
Arranged for Bilt-Rite Taco Tank Type Water Heaters Nos. 598 and 599 and Tankless Water Heaters Nos. 583 and 585						
†S-84-OB	†W-84-OB	390	625	1 5	8x8	20
†S-85-OB	†W-85-OB	480	770	1 65	8x8	25
S-86-OB	W-86-OB	560	895	2 0	8x8	25
S-87-OB	W-87-OB	640	1,025	2 25	8x12	30
S-88-OB	W-88-OB	730	1,170	2 5	8x12	30
S-89-OB	W-89-OB	810	1,295	2 75	8x12	35

For dimensions, tappings and assemblages see pages 18 and 19.

Boiler No.		*Installed Radiation Sq. Ft.		Firing Rate Lbs. per Hour	Chimney	
Steam	Water	Steam	Water		Size Inches	Height Feet
EXBROOK BOILER						
OIL FIRED						
Not adapted for Bilt-Rite Taco Water Heater						
†S-207	†W-207	775	1,240	2 8‡	8x12	25
†S-208	†W-208	950	1,520	3 4	8x12	25
S-209	W-209	1,125	1,800	3 9	12x12	30
S-2010	W-2010	1,300	2,080	4 5	12x12	30
S-2011	W-2011	1,475	2,360	5 0	12x12	35
S-2012	W-2012	1,650	2,640	5 5	12x16	40
Arranged for Bilt-Rite Taco Tank Type Water Heaters Nos. 591 and 592 and Tankless Water Heater No. 593						
†S-207-T	†W-207-T	775	1,240	2 8	8x12	25
†S-208-T	†W-208-T	950	1,520	3 4	8x12	25
S-209-T	W-209-T	1,125	1,800	3 9	12x12	30
S-2010-T	W-2010-T	1,300	2,080	4 5	12x12	30
S-2011-T	W-2011-T	1,475	2,360	5 0	12x12	35
S-2012-T	W-2012-T	1,650	2,640	5 5	12x16	40
OIL HEATING UNIT						
Not adapted for Bilt-Rite Taco Water Heater						
†S-207-OB	†W-207-OB	775	1,240	3 0	8x12	25
†S-208-OB	†W-208-OB	950	1,520	3 5	8x12	25
S-209-OB	W-209-OB	1,125	1,800	4 0	12x12	30
S-2010-OB	W-2010-OB	1,300	2,080	4 5	12x12	30
S-2011-OB	W-2011-OB	1,475	2,360	5 0	12x12	35
S-2012-OB	W-2012-OB	1,650	2,640	5 5	12x16	40
Arranged for Bilt-Rite Taco Tank Type Water Heaters Nos. 591 and 592 and Tankless Water Heater No. 593						
†S-207-OB-T	†W-207-OB-T	775	1,240	3 0	8x12	25
†S-208-OB-T	†W-208-OB-T	950	1,520	3 5	8x12	25
S-209-OB-T	W-209-OB-T	1,125	1,800	4 0	12x12	30
S-2010-OB-T	W-2010-OB-T	1,300	2,090	4 5	12x12	30
S-2011-OB-T	W-2011-OB-T	1,475	2,360	5 0	12x12	35
S-2012-OB-T	W-2012-OB-T	1,650	2,640	5 5	12x16	40

For dimensions, tappings and assemblages see pages 20 and 21.

Boiler No.		*Installed Radiation Sq. Ft.		Firing Rate Lbs. per Hour	Chimney	
Steam	Water	Steam	Water		Size Inches	Height Feet
EXBROOK BOILER—Continued						
STOKER FIRED						
Not adapted for Bilt-Rite Taco Water Heater						
SC-207	WC-207	775	1,240	30	8x12	25
SC-208	WC-208	950	1,520	37	8x12	25
SC-209	WC-209	1,125	1,800	43	12x12	30
SC-2010	WC-2010	1,300	2,080	50	12x12	30
SC-2011	WC-2011	1,475	2,360	56	12x12	35
SC-2012	WC-2012	1,650	2,640	62	12x16	40
Arranged for Bilt-Rite Taco Tank Type Water Heaters Nos. 591 and 592						
SC-207-T	WC-207-T	775	1,240	30	8x12	25
SC-208-T	WC-208-T	950	1,520	37	8x12	25
SC-209-T	WC-209-T	1,125	1,800	43	12x12	30
SC-2010-T	WC-2010-T	1,300	2,080	50	12x12	30
SC-2011-T	WC-2011-T	1,475	2,360	56	12x12	35
SC-2012-T	WC-2012-T	1,650	2,640	62	12x16	40

For dimensions, tappings and assemblages see pages 20 and 21.

REDFLASH BOILER

COAL HAND FIRED

Boiler Number		*Installed Radiation Sq. Ft.		Chimney	
Steam	Water	Steam	Water	Size Inches	Height Feet
No. 2 REDFLASH					
2-S-6	2-W-6	770	1,230	12x12	35
2-S-7	2-W-7	940	1,505	12x12	35
2-S-8	2-W-8	1,110	1,775	12x12	40
2-S-9	2-W-9	1,360	2,050	12x16	40
2-S-10	2-W-10	1,650	2,320	12x16	45
2-S-11	2-W-11	1,620	2,590	12x16	45
2-S-12	2-W-12	1,790	2,960	12x16	50
For dimensions, tappings and assemblages see pages 22 and 23					
No. 3 REDFLASH					
3-S-6	3-W-6	1,500	2,100	12x16	40
3-S-7	3-W-7	1,900	2,660	16x16	45
3-S-8	3-W-8	2,100	3,360	16x16	45
3-S-9	3-W-9	2,400	3,840	16x16	50
3-S-10	3-W-10	2,700	4,320	16x20	55
3-S-11	3-W-11	3,000	4,800	16x20	60
3-S-12	3-W-12	3,300	5,280	20x20	65
3-S-13	3-W-13	3,600	5,760	20x20	65
For dimensions, tappings and assemblages see pages 24 and 25.					
No. 4 REDFLASH					
4-S-7	4-W-7	3,000	4,800	16x20	45
4-S-8	4-W-8	3,575	5,720	20x20	50
4-S-9	4-W-9	4,150	6,640	20x20	55
4-S-10	4-W-10	4,725	7,560	20x20	60
4-S-11	4-W-11	5,300	8,480	20x24	65
4-S-12	4-W-12	5,875	9,400	20x24	70
4-S-13	4-W-13	6,450	10,320	24x24	75
For dimensions, tappings and assemblages see pages 26 and 27.					
No. 5 REDFLASH					
5-S-8	5-W-8	5,000	8,000	20x24	60
5-S-9	5-W-9	5,700	9,120	20x24	65
5-S-10	5-W-10	6,400	10,240	24x24	70
5-S-11	5-W-11	7,100	11,360	24x24	75
5-S-12	5-W-12	7,800	12,480	24x28	80
5-S-13	5-W-13	8,500	13,600	24x28	85
5-S-14	5-W-14	9,200	14,720	24x28	90
5-S-15	5-W-15	9,900	15,840	28x28	90

For dimensions, tappings and assemblages see pages 28 and 29.

†Size of Nozzle Gallons per Hour.
‡Equipped with Crown Sheet Baffle.

*For definition of installed radiation see page 8.
For data on trimmings see page 7.
For data on Bilt-Rite Taco and External Water Heaters see pages 5 and 6.

20968

RATINGS AND DATA

REDFLASH BOILER
OIL FIRED

Boiler Number		*Installed Radiation Sq. Ft.		Firing Rate Gallons Per Hour	Chimney	
Steam	Water	Steam	Water		Size Inches	Height Feet
No. 2 REDFLASH						
2-S-7-O	2-W-7-O	650	1 040	2 5	8x12	20
2-S-8-O	2-W-8-O	770	1,230	2 9	8x12	25
2-S-9-O	2-W-9-O	890	1,425	3 3	8x12	25
2-S-10-O	2-W-10-O	1 000	1 600	3 7	8x12	30
2-S-11-O	2-W-11-O	1 100	1 760	4 0	12x12	30
2-S-12-O	2-W-12-O	1 200	1 920	4 3	12x12	35
2-S-13-O	2-W-13-O	1 300	2,080	4 6	12x12	35
For dimensions, tappings and assemblages see pages 22 and 23.						
No. 3 REDFLASH						
3-S-8-O	3-W-8-O	1 650	2,640	5 7	12x16	25
3-S-10-O	3-W-10-O	1 875	3 000	6 3	12x16	30
3-S-11-O	3-W-11-O	2,100	3 360	6 9	12x16	35
3-S-12-O	3-W-12-O	2 325	3,720	7 6	16x16	35
3-S-13-O	3-W-13-O	2 550	4 080	8 2	16x16	40
3-S-14-O	3-W-14-O	2 775	4 440	8 8	16x16	45
For dimensions, tappings and assemblages see pages 24 and 25.						
No. 4 REDFLASH						
4-S-10-O	4-W-10-O	2,750	4 400	9 1	16x16	30
4-S-11-O	4-W-11-O	3,100	4,960	10 1	16x16	35
4-S-12-O	4-W-12-O	3 450	5,520	11 0	16x20	40
4-S-13-O	4-W-13-O	3,800	6,080	11 9	16x20	40
4-S-14-O	4-W-14-O	4,150	6 640	12 9	16x20	45
For dimensions, tappings and assemblages see pages 26 and 27.						
No. 5 REDFLASH						
5-S-10-O	5-W-10-O	3 900	6 240	12 4	16x20	30
5-S-11-O	5-W-11-O	4 400	7,040	13 7	20x20	35
5-S-12-O	5-W-12-O	4 900	7 840	15 0	20x20	35
5-S-13-O	5-W-13-O	5 400	8 640	16 3	20x20	40
5-S-14-O	5-W-14-O	5 900	9 440	17 6	20x24	45
5-S-15-O	5-W-15-O	6 400	10,240	19 0	20x24	50
5-S-16-O	5-W-16-O	6 900	11 040	20 4	20x24	55
5-S-17-O	5-W-17-O	7 400	11,840	21 9	20x24	60
For dimensions, tappings and assemblages see pages 28 and 29.						

WATER TUBE BOILER
OIL FIRED

No. 29 WATER TUBE						
S-0629	W-0629	1 200	1,920	4 1	12x12	25
S-0729	W-0729	1 350	2,320	4 8	12x12	25
S-0829	W-0829	1,540	2,690	5 5	12x16	30
S-0929	W-0929	1,900	3,046	6 1	12x16	35
S-1029	W-1029	2,130	3 410	6 7	12x16	40
S-1129	W-1129	2,370	3,790	7 4	16x16	45
For dimensions, tappings and assemblages see pages 32 and 33.						
No. 36 WATER TUBE						
S-0736	W-0736	2 550	3,760	7 6	16x16	30
S-0836	W-0836	2,500	4 480	8 9	16x16	35
S-0936	W-0936	3,250	5,200	10 2	16x20	40
S-1036	W-1036	3,700	5,920	11 4	16x20	50
S-1136	W-1136	4 150	6,640	12 6	16x20	55
S-1236	W-1236	4 600	7,360	13 9	20x20	60
For dimensions, tappings and assemblages see pages 34 and 35.						

REDFLASH BOILER
STOKER FIRED

Boiler Number		*Installed Radiation Sq. Ft.		Firing Rate Pounds Per Hour	Chimney	
Steam	Water	Steam	Water		Size Inches	Height Feet
No. 2 REDFLASH						
2-SC-7	2-WC-7	730	1,170	31	8x12	25
2-SC-8	2-WC-8	860	1,375	36	8x12	25
2-SC-9	2-WC-9	1 000	1,600	42	8x12	30
2-SC-10	2-WC-10	1 150	1,840	48	8x12	30
2-SC-11	2-WC-11	1,300	2,080	53	12x12	35
2-SC-12	2-WC-12	1 450	2,320	59	12x12	35
2-SC-13	2-WC-13	1 600	2,560	65	12x16	40
For dimensions, tappings and assemblages see pages 22 and 23.						
No. 3 REDFLASH						
3-SC-9	3-WC-9	1 600	2,480	70	12x16	30
3-SC-10	3-WC-10	2,100	3,360	81	12x16	35
3-SC-11	3-WC-11	2,400	3 840	92	16x16	35
3-SC-12	3-WC-12	2,700	4,320	102	16x16	35
3-SC-13	3-WC-13	3 000	4 800	113	16x16	40
3-SC-14	3-WC-14	3 300	5 280	123	16x20	45
For dimensions, tappings and assemblages see pages 24 and 25.						
No. 4 REDFLASH						
4-SC-10	4-WC-10	3 200	5 120	120	16x16	30
4-SC-11	4-WC-11	3,600	5,760	133	16x20	35
4-SC-12	4-WC-12	4,000	6,400	147	16x20	40
4-SC-13	4-WC-13	4,400	7,040	161	16x20	45
4-SC-14	4-WC-14	4,800	7,680	174	20x20	50
For dimensions, tappings and assemblages see pages 26 and 27.						
No. 5 REDFLASH						
5-SC-10	5-WC-10	4 500	7 200	163	20x20	35
5-SC-11	5-WC-11	5,100	8,160	184	20x20	35
5-SC-12	5-WC-12	5 700	9 120	204	20x20	40
5-SC-13	5-WC-13	6,300	10 080	224	20x24	45
5-SC-14	5-WC-14	6 900	11,040	245	20x24	50
5-SC-15	5-WC-15	7,500	12 000	266	20x24	55
5-SC-16	5-WC-16	8,100	12,960	286	20x24	60
5-SC-17	5-WC-17	8,700	13,920	309	20x24	65
For dimensions, tappings and assemblages see pages 28 and 29.						

WATER TUBE BOILER
STOKER FIRED

No. 29 WATER TUBE						
SC-29-T-6	WC-29-T-6	930	1,490	38	8x12	25
SC-29-T-6	WC-29-T-6	1 200	1,920	46	12x12	25
SC-29-T-7	WC-29-T-7	1,450	2 320	55	12x12	25
SC-29-T-8	WC-29-T-8	1,680	2 690	63	12x16	30
SC-29-T-9	WC-29-T-9	1 906	3 050	71	12x16	35
SC-29-T-10	WC-29-T-10	2,130	3,410	78	12x16	40
SC-29-T-11	WC-29-T-11	2,370	3,790	87	16x16	45
SC-29-T-12	WC-29-T-12	2,600	4,160	95	16x16	45
For dimensions, tappings and assemblages see pages 32 and 33.						
No. 36 WATER TUBE						
SC-36-T-6	WC-36-T-6	1,900	3,040	71	12x16	25
SC-36-T-7	WC-36-T-7	2,350	3,760	86	16x16	30
SC-36-T-8	WC-36-T-8	2 800	4,480	101	16x16	35
SC-36-T-9	WC-36-T-9	3,250	5 200	116	16x20	40
SC-36-T-10	WC-36-T-10	3,700	5,920	130	16x20	50
SC-36-T-11	WC-36-T-11	4,150	6,640	145	16x20	55
SC-36-T-12	WC-36-T-12	4 600	7 360	160	20x20	60
For dimensions, tappings and assemblages see pages 34 and 35.						

*For definition of "Installed Radiation" see page 8.
For data on trimmings see page 7.
For data on External Water Heaters see page 6.

20969

RATINGS AND DATA

Boiler Number		A.G.A. Output 1,000 Btu	A.G.A. Rating Sq. Ft.		*Installed Radiation Sq. Ft.		Firing Rate 1,000 Btu Per Hour
Steam	Water		Steam	Water	Steam	Water 150 Btu/hr	
STANDARD BOILER GAS FIRED							
	1-G-A-4	71.5		210		235	39.1
	1-G-A-5	82		240		190	52.5
	1-G-A-6	92.5		350		225	65.7
	2-G-A-6	63		420		270	78.8
	2-G-A-8	84		560		360	105
	2-G-A-10	105		700		455	131.3
	2-G-A-12	126		840		550	157.5
	3-G-A-9	168		1,120		740	210
	4-G-A-11	210		1,400		930	262.5
	4-G-A-13	252		1,680		1,125	315
1-GS-4	1-G-W-4	116	610	940	600	610	183
1-GS-5	1-G-W-5	146	775	1,210	515	825	232.5
1-GS-6	1-G-W-6	225	940	1,500	630	1,010	282
1-GS-7	1-G-W-7	265	1,105	1,770	745	1,190	331.5
1-GS-8	1-G-W-8	305	1,270	2,030	860	1,375	381
1-GS-9	1-G-W-9	344	1,435	2,300	960	1,565	430.5
1-GS-10	1-G-W-10	384	1,600	2,560	1,100	1,760	480
1-GS-11	1-G-W-11	424	1,765	2,820	1,215	1,945	529.5
1-GS-6	1-G-W-6	140	2,000	3,200	1,390	2,225	630
1-GS-7	1-G-W-7	176	2,400	3,840	1,690	2,705	720
1-GS-8	1-G-W-8	672	2,940	4,140	1,995	3,190	840
1-GS-9	1-G-W-9	756	3,200	5,120	2,300	3,685	960
1-GS-10	1-G-W-10	864	3,600	5,760	2,610	4,190	1,050
1-GS-11	1-G-W-11	960	4,000	6,400	2,925	4,680	1,200
1-GS-13	1-G-W-13	1,152	4,900	7,840	3,570	5,710	1,440
1-GS-15	1-G-W-15	1,344	5,600	8,960	4,230	6,770	1,680
1-GS-17	1-G-W-17	1,536	6,400	10,240	4,900	7,840	1,920
1-GS-19	1-G-W-19	1,728	7,200	11,520	5,560	8,910	2,160
1-GS-21	1-G-W-21	1,920	8,000	12,800	6,210	9,930	2,400
1-GS-22	1-G-W-22	2,016	8,400	13,440	6,520	10,430	2,520
1-GS-25	1-G-W-25	2,304	9,600	15,360	7,450	11,920	2,880
1-GS-29	1-G-W-29	2,592	10,800	17,280	8,390	13,410	3,240
1-GS-31	1-G-W-31	2,880	12,000	19,200	9,320	14,910	3,600
1-GS-33	1-G-W-33	3,072	12,800	20,480	9,940	15,900	3,840
1-GS-37	1-G-W-37	3,552	14,800	23,040	11,190	17,890	4,320
1-GS-41	1-G-W-41	3,840	16,000	25,600	12,430	19,860	4,800

For dimensions, tappings and assemblages see pages 39, 40 and 41.
Water line on 1-G-S Boilers, 30"; on 4-G-S Boilers, 48".
Drilled Port Burners are standard. Ribbon Burners for manufactured gas optional.

Boiler Number		A.G.A. Output 1,000 Btu	A.G.A. Rating Sq. Ft.		*Installed Radiation Sq. Ft.		Firing Rate 1,000 Btu Per Hour
Steam	Water		Steam	Water	Steam	Water 150 Btu/hr	
EMPIRE BOILER GAS FIRED							
0-G-S-4-E		61.2	255		165		76.5
0-G-S-5-E		81.6	340		220		102
0-G-S-6-E		102	425		275		127.5
	1-G-A-4-E	71.5		210		235	39.1
	1-G-A-5-E	82		240		190	52.5
	1-G-A-6-E	92.5		350		225	65.7
	2-G-A-6-E	63		420		270	78.8
	2-G-A-8-E	84		560		360	105
	2-G-A-10-E	105		700		455	131.3
	2-G-A-12-E	126		840		550	157.5
	3-G-A-8-E	147		980		665	183.8
	4-G-A-9-E	168		1,120		740	210
	4-G-A-11-E	210		1,400		930	262.5
	4-G-A-13-E	252		1,680		1,125	315
1-GS-4-E	1-G-W-4-E	116	610	940	600	610	183
1-GS-5-E	1-G-W-5-E	146	775	1,210	515	825	232.5
1-GS-6-E	1-G-W-6-E	225	940	1,500	630	1,010	282
1-GS-7-E	1-G-W-7-E	265	1,105	1,770	745	1,190	331.5
1-GS-8-E	1-G-W-8-E	305	1,270	2,030	860	1,375	381
1-GS-9-E	1-G-W-9-E	344	1,435	2,300	960	1,565	430.5
1-GS-10-E	1-G-W-10-E	384	1,600	2,560	1,100	1,760	480

For dimensions, tappings and assemblages see pages 36, 37 and 38.
Water line on 0-G-S-E Boilers, 24"; on 1-GS-E Boilers 30".
Drilled Port Burners are standard. Ribbon Burners for manufactured gas optional.

*For definition of "Installed Radiation" see page 8.
For data on trimmings see page 7.
For flue recommendations and layout of tappings for 1-G Boilers see page 42.

DATA ON BILT

E

REDFLASH BOILERS

All Redflash Boilers external water heater. water heater tappings the back section for No higher than boss on ec extra charges indicated

WATER TUBE BOILI

All Water Tube Boi water heater. All inte heater tappings. Those in price book.

I

SEVERN BOILERS

Severn Boilers can and Stoker Fired Boi the Oil Fired Boiler c

Severn Boilers are

Type of Boiler

Hand Fired Steam

Oil and Stoker Fi

Oil Fired

ARCOLINER BOI

Arcoliner Boilers Water Heaters. T the Wet Base Oil I

DATA ON BILTIN AND EXTERNAL WATER HEATERS

EXTERNAL WATER HEATERS

REDFLASH BOILERS

All Redflash Boilers shown in this catalog are tapped on rear of back section for external water heater. All intermediate sections are furnished with bosses for external water heater tappings the same distance from the floor as the tappings on the rear of the back section for Nos. 3, 4 and 5 boilers. On No. 2 Redflash tapping on back is $\frac{9}{16}$" higher than boss on center sections. These bosses will be tapped on special order, at extra charges indicated in price book.

WATER TUBE BOILERS

All Water Tube Boilers are regularly tapped on rear of back section for external water heater. All intermediate sections are furnished with bosses for external water heater tappings. These bosses will be tapped on special order, at extra charges indicated in price book.

BILTIN TACO WATER HEATERS

SEVERN BOILERS

Severn Boilers can be furnished with Biltin Taco Water Heaters. Hand Fired, Oil and Stoker Fired Boilers can be supplied with Tank Type Water Heater. In addition, the Oil Fired Boiler can be supplied with Tankless Type Water Heater.

Severn Boilers and recommended Biltin Taco Water Heaters are shown as follows:

Type of Boiler	Biltin Taco Heater No.	Type	Capacity Gallons
Hand Fired (Steam only)	701	Tank	60
	702	Tank	40
	703	Tank	100
Oil and Stoker Fired	703	Tank	66
	594	Tank	100
	595	Tank	160
Oil Fired	590	Tankless	3½ per Min.

ARCOLINER BOILERS

Arcoliner Boilers, both Dry Base and Wet Base can be furnished with Biltin Taco Water Heaters. The Dry Base Boiler can be furnished with Tank Type Water Heater; the Wet Base Oil Boiler can be supplied with either Tank or Tankless Type Heater.

20971

DATA ON BILTIN AND EXTERNAL WATER HEATERS

ARCOLINER BOILERS—(Continued)

Biltin Taco Water Heaters and the Arcoliner Boilers for use with which they are recommended are as shown below:

Type of Boiler	Biltin Taco Heater No.	Type	Capacity Gallons
DRY BASE			
Hand Fired—(Steam only)	701	Tank	60
	702	Tank	40
WET BASE—Oil Fired			
Steam and Water—Regular	701	Tank	40
5 and 6 Section Water—Regular	703	Tank	66
Steam and Water—"T" Type	587	Tank	85
Steam and Water—"T" Type	589	Tankless	3 per Min.

OAKMONT OIL FIRED BOILER

Oakmont Boilers can be furnished for Biltin Taco Water Heaters, either Tank or Tankless Type, as follows:

Type of Boiler	Biltin Taco Heater No.	Type	Capacity Gallons
All—Steam or Water	598	Tank	40
	599	Tank	100
	583	Tankless	3 per Min
	585	Tankless	3½ per Min.

An external type water heater may be connected to the Oakmont Boiler by tapping a boss on the blind flange which is provided to cover the heater opening in back section.

EXBROOK BOILER — "T" Type

The "T" Type Exbrook Boiler may be supplied with Biltin Taco Water Heaters for Oil or Stoker Fired Models as follows:

Type of Boiler	Biltin Taco Heater No.	Type	Capacity Gallons
Oil and Stoker Fired	591	Tank	120
	592	Tank	200
Oil Fired	593	Tankless	5½ per Min.

SIZES OF WATER CONNECTIONS OF TACO WATER HEATERS ARE AS FOLLOWS:

Biltin Tank Type		Biltin Tankless Type	
No. 587—1"	No. 598—¾"	No. 583—¾"	No. 590—½"
No. 591—1¼"	No. 599—1"	No. 585—¾"	No. 593—1"
No. 592—1¼"	No. 701—1"	No. 589—½"	
No. 594—1¼"	No. 702—1"		
No. 595—1¼"	No. 703—1"		

20972

BOILER TRIMMINGS AND SUNDRIES

AMERICAN BOILERS are regularly furnished complete with trimmings and equipment as follows:

HAND FIRED BOILERS

ARCOLINER (Dry Base)—SEVERN—REDFLASH

STEAM—Steam Gauge, Safety Valve, Water Gauge Glass and Trimmings, Try Cocks, Automatic Damper Regulator and Firing Tools.

WATER—Combination Altitude Gauge and Thermometer, Automatic Damper Regulator (except on Nos. 3, 4 and 5 Redflash) and Firing Tools.

OIL BURNING BOILERS—STOKER FIRED BOILERS

SEVERN—REDFLASH—WATER TUBE

STEAM AND WATER—Boilers adaptable for Oil or Stoker Firing are furnished complete with trimmings and equipment same as corresponding hand fired boilers, except grate assemblies, firing tools and automatic damper regulators are not included. Platework specially adaptable to installation of Oil Burner or Stoker is supplied. Flue Brush or Flue Scraper is included.

ARCOLINER (Wet Base)—OAKMONT—EXBROOK

Boilers specially designed for Oil or Stoker Firing are regularly furnished complete with trimmings as follows:

STEAM—Steam Gauge, Safety Valve, Water Gauge Glass and Trimmings, Try Cocks' Flue Brush.

WATER—Combination Altitude Gauge and Thermometer, Flue Brush.

ARCOFLAME OIL HEATING UNITS

ARCOLINER (Wet Base)—SEVERN—OAKMONT—EXBROOK UNITS

Arcoflame Oil Heating Units are regularly furnished complete with trimmings as follows:

STEAM—Steam Gauge, Safety Valve, Water Gauge Glass and Trimmings, Try Cocks, Flue Brush, AMERICAN Draft Stabilizer.

WATER—Combination Altitude Gauge and Thermometer, Flue Brush, AMERICAN Draft Stabilizer.

GAS FIRED BOILERS

Gas Boilers are regularly furnished complete with trimmings as follows:

STEAM—Steam Gauge, Safety Valve, Water Gauge Glass and Trimmings, Try Cocks, Flue Brush, Resetting Low Water Cut-off, Thermotor Throttling Valve with Thermo Pilot and Integral Steam Pressure Regulator, Draft Hood and Gas Pressure Governor.

WATER—Combination Altitude Gauge and Thermometer, Flue Brush, Thermotor Throttling Valve with Thermo Pilot and Integral Water Temperature Regulator, Draft Hood and Gas Pressure Governor.

ARCOLA BOILERS—UNJACKETED

Hand Fired Arcola Boilers are regularly supplied with Ashpan and Firing Tools. Automatic Damper Regulator and Arcola Adjuncts—consisting of Expansion Tank, Expansion Tank Trimmings, Drain Cock and Overflow Fitting—can be furnished at extra cost.

20973

DEFINITION OF RATINGS

The ratings ("Installed Radiation, Sq. Ft.") of AMERICAN Boilers represent the maximum net loads (240 Btu per sq. ft. steam and 150 Btu per sq. ft. hot water) that may be connected to the boilers. Allowances have been made in these ratings for *normal* piping (covered) and pick-up loads and for heating domestic hot water under the following conditions:

It is not necessary to increase the boiler size for domestic hot water supply when not more than two bathrooms are to be served or if the use of domestic hot water does not exceed seventy-five gallons in twenty-four hours.

Sufficient radiation must be installed for the requirements of the building.

HAND FIRED BOILERS

The ratings ("Installed Radiation, Sq. Ft.") are based on the use of stove or nut size bituminous coal, anthracite coal or coke with 13,000 Btu per pound heat value.

See table on page 9 for selecting proper size boiler when using coal with less than 13,000 Btu per pound.

When more than two bathrooms are to be supplied with domestic hot water or when the demand for domestic hot water exceeds seventy-five gallons in twenty-four hours increase the boiler size one-half sq. ft. steam or four-fifths sq. ft. water for each gallon of storage tank capacity.

OIL FIRED BOILERS

The Firing Rates—Gallons per Hour—are based on the use of oil having 140,000 Btu per gallon heat value, and with 10% CO_2 in the flue gas.

When more than two bathrooms are to be supplied with domestic hot water or when the demand for domestic hot water exceeds seventy-five gallons in twenty-four hours increase the boiler size one-half sq. ft. steam or four-fifths sq. ft. water for each gallon of storage tank capacity.

When Biltin Tankless Heater is used increase the boiler size fifty sq. ft. steam or eighty sq. ft. water for each bathroom in excess of two.

STOKER FIRED BOILERS

The Firing Rates—Pounds per Hour—are based on the use of coal having 13,000 Btu per pound heat value.

When more than two bathrooms are to be supplied with domestic hot water or when the demand for domestic hot water exceeds seventy-five gallons in twenty-four hours increase the boiler size one-half sq. ft. steam or four-fifths sq. ft. water for each gallon of storage tank capacity.

GAS FIRED BOILERS

The Output ratings and Firing Rates are approved by the American Gas Association.

Ratings shown are for elevations up to 2,000 feet. For elevations above 2,000 feet, ratings shall be reduced at the rate of 5 per cent for each 1,000 feet above sea level.

20974

INCREASING RATINGS WHEN PIPING LOSS IS NEGLIGIBLE

The ratings ("Installed Radiation, Sq. Ft.") of AMERICAN Boilers may be increased by the percentages shown below when the piping loss of the installation is negligible.

Ratings Installed Radiation Sq. Ft.		Increase Ratings by
Steam	Water	
up to 250	up to 400	30%
251- 500	401- 800	28%
501-1,000	801-1,600	24%
1,001-1,500	1,601-2,400	21%
1,501-2,000	2,401-3,200	18%
2,001-3,000	3,201-4,800	15%
3,001-4,000	4,801-6,400	13%
over 4,000	over 6,400	12%

WHERE COAL HAS LESS THAN 13,000 BTU CONTENT

When selecting hand fired AMERICAN Boilers for burning coal of lower heating value than 13,000 Btu per pound the following correction factors should be used. Multiply the net load by the proper factor and select the boiler with the corresponding rating ("Installed Radiation Sq. Ft.").

Heating Value of Coal	Correction Factor
13,000	1.00
12,500	1.04
12,000	1.08
11,500	1.13
11,000	1.18
10,500	1.24
10,000	1.30
9,500	1.37
9,000	1.44

BILTIN WATER HEATERS

All tank type Biltin Taco Water Heaters listed herein are rated on the basis of raising the temperature of the domestic hot water 100°F. in three hours with a minimum boiler water temperature of 180°F. on automatically fired boilers and 212°F. on hand fired boilers.

All tankless type Biltin Taco Water Heaters listed herein are rated on the basis of raising the temperature of the domestic hot water 100°F. in gallons per minute with a minimum boiler water temperature of 180°F. on oil fired boilers.

In those areas where excessive lime exists in the water, use of Biltin Taco Tankless Type Water Heater is not recommended except when provision is made for regularly cleaning the heater. Use of Tank Type Heater is recommended in hard water areas.

HOW TO SIZE BOILERS

In order to select the proper size boiler divide the heat loss of the building by 240 Btu for steam boilers or 150 Btu for hot water boilers. Example: Assume the heat loss of the building to be 60,000 Btu per hour. For a steam boiler divide 60,000 by 240, which requires a 250 sq. ft. boiler. For a hot water boiler divide 60,000 by 150, which requires a 400 sq. ft. boiler. This formula applies to the boiler, regardless of the type of radiators or convectors, or the water temperature used.

See page 89 for determining the size of radiators or convectors for hot water systems

20975

ARCOLINER (DRY BASE) BOILER

MEASUREMENTS AND TAPPINGS

COAL (HAND FIRED)

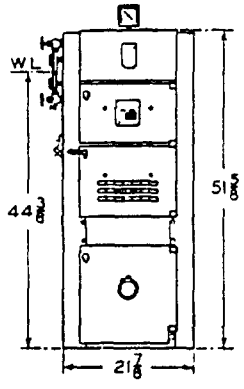

Front View

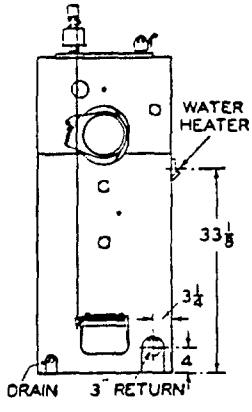

Back View

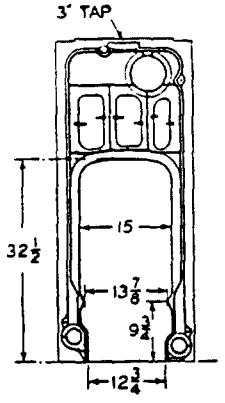

Center Section

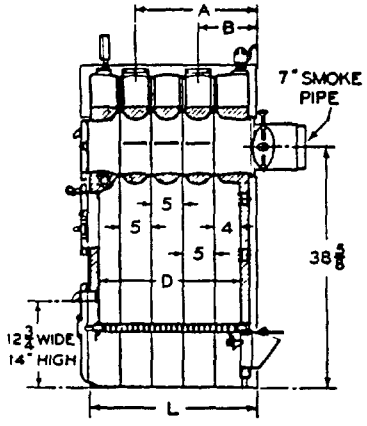

Section Through Boiler

Boiler No.	Nu Ta
	Fl
153	1
154	1
155	2
156	2

*Add 8½ in. to length f

Boiler No.	Arrang
153	DF-DXU-1
154	DF-DC-D
155	DF-DCX-1
156	DF-DCX-1

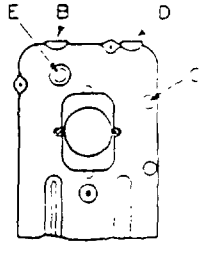

Control Tappings

For data on Biltin Taco
For data on trimmings

ARCOLINER (DRY BASE) BOILER

COAL (HAND FIRED)

OUTLETS — INLETS — DIMENSIONS

Boiler No.	Number and Size of Tappings — Inches		Dimensions — Inches See Drawings — Opposite Page			
	Flow	Return	A	B	D	L*
153	1-3	1-3	. . .	9⅛	12⅜	16⅝
154	1-3	1-3	. .	9⅛	17⅜	21⅝
155	2-3	1-3	19⅛	9⅛	22⅜	26⅝
156	2-3	1-3	24⅛	9⅛	27⅜	31⅝

*Add 8¼ In. to length for Smoke Hood.

ASSEMBLAGE OF SECTIONS

Boiler No.	Arrangement of Sections	Legend
153	DF-DXU-DB	DF = Front Section.
154	DF-DC-DXU-DB	DC = Center Section.
155	DF-DCX-DC-DXU-DB	DCX = Center Connecting Section.
156	DF-DCX-DC-DC-DXU-DB	DXU = Center Uptake Connecting Section.
		DB = Back Section.

CONTROL APPLICATIONS

(See Illustration at Left)

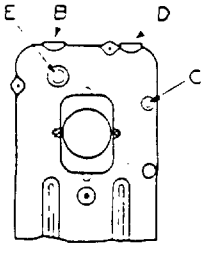

Control Tappings

Location on Boiler	Size Inches	Steam Boilers	Vapor Boilers	Water Boilers
B	1½	Pressure Control	Vapor Control	Water Limit Control
C	¾	Water Temp. Control	Water Temp. Control	Water Temp. Control
D	1¼	Safety Valve	Safety Valve	Relief Valve
E	1½	Blow Off	Blow Off	Alternate Water Limit Control

For data on Bilin Taco Water Heaters see page 6.
For data on trimmings see page 7.

20977

ARCOLINER (WET BASE) BOILER
OIL FIRED
MEASUREMENTS AND TAPPINGS
Narrow Back — Adapted for Biltin Taco No. 701 or 703 Tank Type Water Heaters

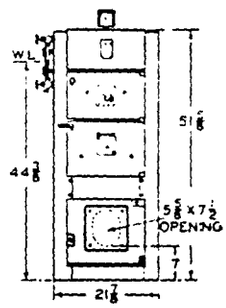

Front View

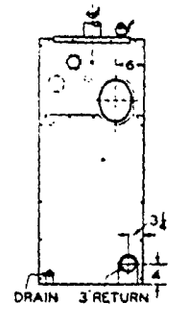

Back View

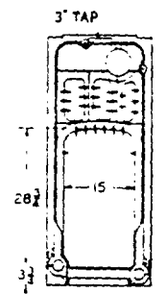

Center Section

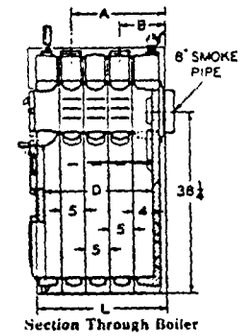

Section Through Boiler

OUTLETS — INLETS — DIMENSIONS

Boiler No.	Number and Size of Tappings, Ins.		Dimensions — Steam and Water Inches			
	Flow	Return	A	B	D	L*
O-153	1-3	1-3	.....	9⅛	12⅜	16⅝
O-154	1-3	1-3	.....	9⅛	17¾	21⅝
O-155	2-3	1-3	19⅛	9⅛	22⅜	26⅝
O-156	2-3	1-3	24⅛	9⅛	27¾	31⅝

*Add 1½ in. to length for Smoke Collar.

APPLICATION OF CONTROLS

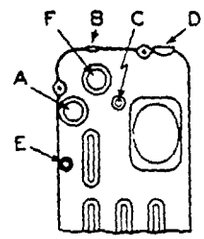

Back View Showing Control Tappings

Location on Boiler	Size Inches	Steam Boilers	Vapor Boilers	Water Boilers
A	2½	Internal Low Water Cut-off	Internal Low Water Cut-off	Alternate Water Limit Control
B	½	Pressure Control	Vapor Control	Water Limit Control
C	¾	Not Used	Not Used	Water Temp. Control*
D	1¼	Safety Valve	Safety Valve	Relief Valve
E	¾	Water Temp. Control	Water Temp. Control	Water Temp. Control**
F	2½	Blow Off	Blow Off	Water Heater on 4, 5 and 6 Sec. Boilers
Inserted in Smoke Pipe		Stack Control	Stack Control	Stack Control

*Used when water heater is in Tapping "F."
**Used when water heater is in front.
For dimensions of Extended Jacket, also data on Assemblages, see page 14.

20978

ARCOLINER (WET BASE) BOILER

OIL FIRED

MEASUREMENTS AND TAPPINGS

Wide Back — Adapted for Biltin Taco No. 587 Tank Type or No. 589 Tankless Water Heaters

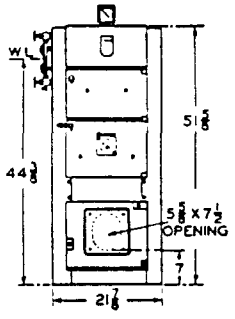

Front View

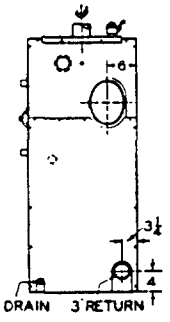

Back View

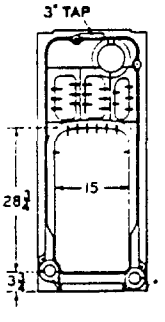

Center Section

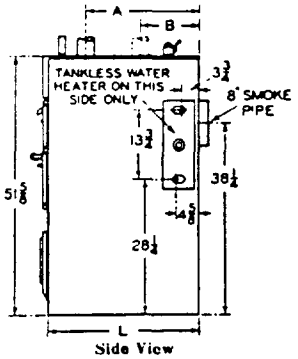

Side View

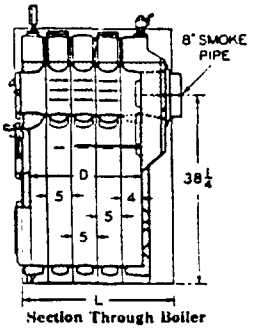

Section Through Boiler

OUTLETS — INLETS — DIMENSIONS

Boiler No.	Number and Size of Tappings, Ins.		Dimensions — Steam and Water Inches			
	Flow	Return	A	B	D	L*
O-153-T	1-3	1-3	.....	13	12 3/4	20 3/8
O-154-T	1-3	1-3	.....	13	17 3/8	25 3/8
O-155-T	2-3	1-3	23	13	22 3/8	30 3/8
O-156-T	2-3	1-3	28	13	27 3/4	35 3/4

*Add 1½ in. to length for Smoke Collar.

APPLICATION OF CONTROLS

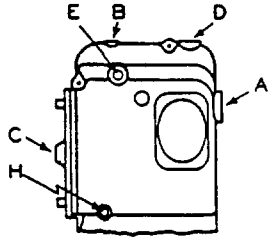

Back View Showing Control Tappings

Location on Boiler	Size Inches	Steam Boilers	Vapor Boilers	Water Boilers
A	2½	Internal Low Water Cut-off	Internal Low Water Cut-off	Not Used
B	½	Pressure Control	Vapor Control	Water Limit Control
C	¾	Water Temp. Control	Water Temp. Control	Water Temp. Control
D	1¼	Safety Valve	Safety Valve	Relief Valve
E	1½	Blow Off	Blow Off	Alternate Water Limit Control
H	¾	Not Used	Not Used	Reverse Acting Water Temp. Control
Inserted in Smoke Pipe		Stack Control	Stack Control	Stack Control

For Dimensions of Extended Jacket also data on Assemblages, see page 14.

20979

ARCOLINER (WET BASE) BOILER
OIL FIRED

MEASUREMENTS AND TAPPINGS
Boiler with Jacket Extension

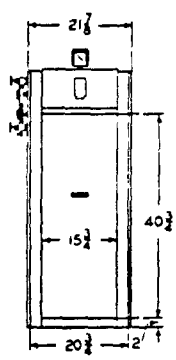

Front View

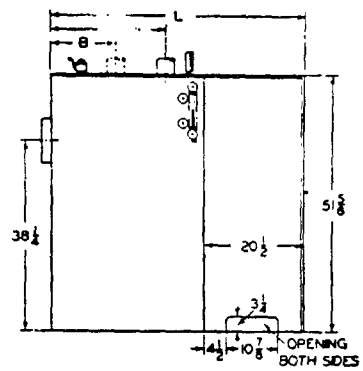

Side View — Front of Boiler faces Right

OUTLETS — INLETS — DIMENSIONS

Boiler No.	Number and Size of Tappings, Ins.		Dimensions — Steam and Water Inches		
	Flow	Return	A	B	L
Narrow Back — Adapted for Taco Tank Type Water Heater No. 701 or 703					
O-153	1-3	1-3	. . . . .	9⅛	37⅛
O-154	1-3	1-3	. . . . .	9⅛	42⅛
O-155	2-3	1-3	19⅛	9⅛	47⅛
O-156	2-3	1-3	24¼	9⅛	52⅛
Wide Back — Adapted for No. 587 Taco Tank Type or No. 589 Tankless Water Heater					
O-153-T	1-3	1-3	. . . . .	13	40⅞
O-154-T	1-3	1-3	. . . . .	13	45⅞
O-155-T	2-3	1-3	23	13	50⅞
O-156-T	2-3	1-3	28	13	55⅞

ASSEMBLAGE OF SECTIONS

Boiler No.	Arrangement of Sections
Narrow Back — Adapted for Tank Type Water Heater No. 701 or 703	
S or W-O-153	WF-WCX-NWB
S or W-O-154	WF-WC-WCX-NWB
S or W-O-155	WF-WCX-WC-WCX-NWB
S or W-O-156	WF-WCX-WC-WC-WCX-NWB
Wide Back — Adapted for No. 587 Taco Tank Type or No. 589 Tankless Water Heater	
S or W-O-153-T	WF-WCX-TWB
S or W-O-154-T	WF-WC-WCX-TWB
S or W-O-155-T	WF-WCX-WC-WCX-TWB
S or W-O-156-T	WF-WCX-WC-WC-WCX-TWB

LEGEND: WF = Oil Front Section; WC = Oil Center Section: WCX = Oil Center Connecting Section; NWB = Oil Back Section for No. 701 or 703 Biltin Taco Tank Type Water Heater; TWB = Oil Back Section for Flanged Type Biltin Taco Water Heater.

For Data on Biltin Taco Water Heaters, see page 6
For Data on Trimmings, see page 7.

20980

ARCOLA WATER BOILER

COAL (HAND FIRED)

MEASUREMENTS AND TAPPINGS

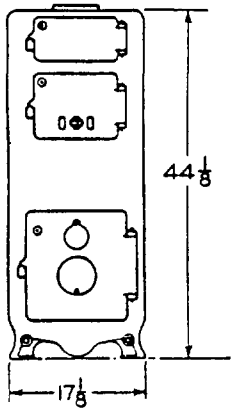

Front View

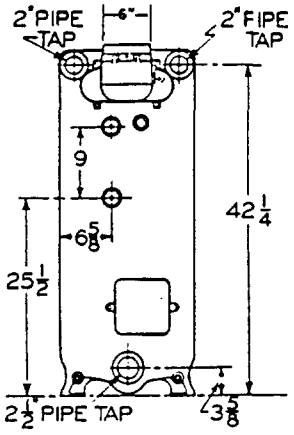

Rear View

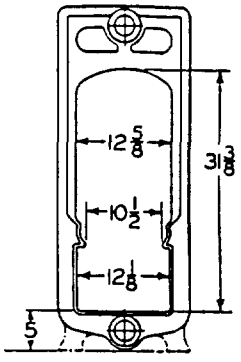

Center Section

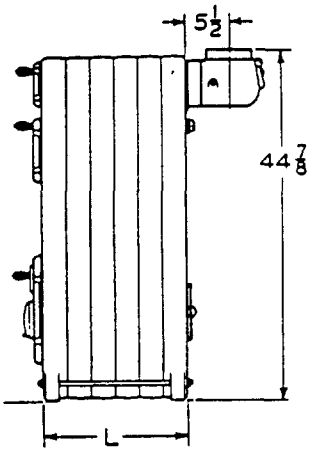

Side View

Number of Boiler	Number of Sections	**Length "L" Inches	Tappings		Chimney		Radiating Surface of Heater Sq. Ft.
			Inlets Inches	Outlets Inches	Diam. Inches	Height Feet	
4-A	4	12	1-2½	2-2	6	20	45
5-A	5	15	1-2½	2-2	6	20	50
6-A	6	18	1-2½	2-2	8	25	55
7-A	7	21	1-2½	2-2	8	25	60
8-A	8	24	1-2½	2-2	8	25	65
9-A	9	27	1-2½	2-2	8	30	70
10-A	10	30	1-2½	2-2	8	30	75

**Add 10 in. to length for Smoke Hood.
For data on trimmings and adjuncts see page 7.

20981

SEVERN BOILER

COAL (HAND FIRED OR STOKER) OR OIL MEASUREMENTS AND TAPPINGS

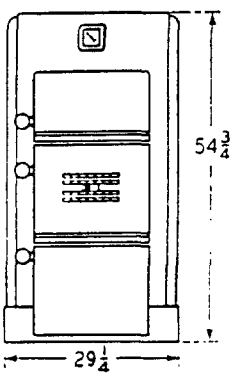

Front View — Coal Fired.
Oil Fired same except has Observation Glass in Service Door and Ash Pit Door is replaced with convenient cover plate.
Dimensions shown are the same for all Boilers.

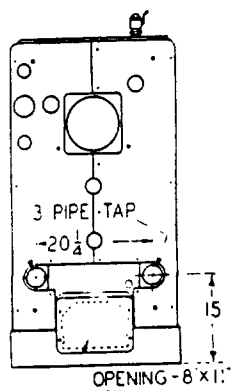

Rear View
Oil Fired

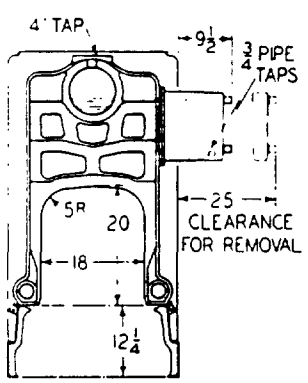

Center Section — With Tankless Heater. Other Center Sections are similar (except for Taco opening) and have same dimensions.

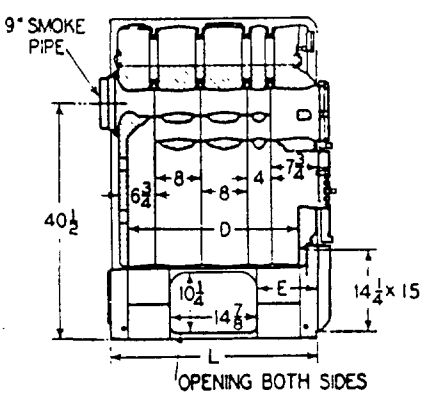

Section Through Boiler
Stoker Fired

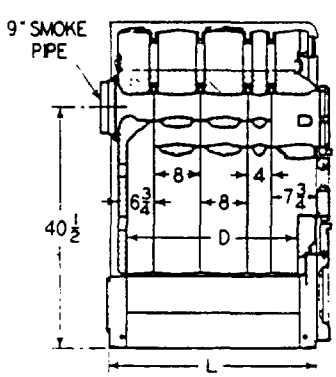

Section Through Boiler
Oil Fired

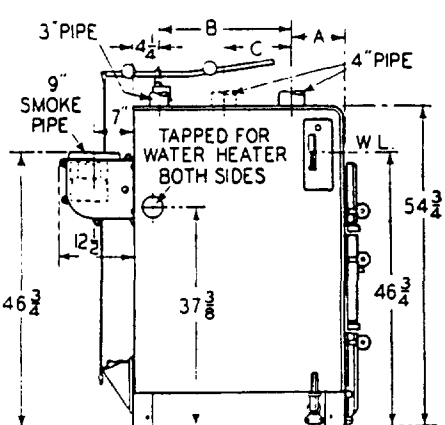

Side View — Hand Fired
Length — Same as Oil or Stoker Fired.

20982

SEVERN BOILER

COAL (HAND FIRED OR STOKER) OR OIL
OUTLETS — INLETS — DIMENSIONS

Boiler No.		Number and Size of Tappings — Inches		Dimensions — Inches See Drawings — Opposite Page					
Steam	Water	Flow	Return	A	B	C	D	E	L*
S-17	W-17	1-3 1-4	2-3	11¾	7¼		17	4¼	23¼
S-21	W-21	1-3 1-4	2-3	15¾	7¼	.	21	6¼	27¼
S-25	W-25	1-3 1-4	2-3	11¾	15¼	.	25	8¼	31¼
S-29	W-29	1-3 1-4	2-3	15¾	15¼	..	29	10¼	35¼
S-33	W-33	1-3 1-4	2-3	19¾	15¼	..	33	12¼	39¼
S-37	W-37	1-3 2-4	2-3	15¾	23¼	16	37	14¼	43¼

Note: Same data applies to all Severn Boilers — Hand Fired, Oil, Stoker and "T" Type.

*On Hand Fired Boilers add 12½ in. to length for Smoke Hood. On Oil and Stoker Fired, add 2 in. for Smoke Collar.

ASSEMBLAGE OF SECTIONS

COAL (Hand Fired or Stoker) or Oil

Boiler No.		Arrangement of Sections	Legend
Steam	Water		
S-17	W-17	F-CX-BO	F = Front Section.
S-21	W-21	F-NC-CX-BO	C = 8" Center Section.
S-25	W-25	F-CX-C-BO	CX = 8" Center Connecting Section.
S-29	W-29	F-NC-CX-C-BO	NC = 4" Center Section.
S-33	W-33	F-C-CX-C-BO	BO = Back Section.
S-37	W-37	F-NC-CX-C-CX-BO	

Note: On "T" Type Boilers, for use with Biltin Taco Tank Type Water Heaters Nos. 591 and 595 and Biltin Taco Tankless Heater No. 590, a "CXT" 8 in. Center Connecting Section, interchangeable with regular "CX" section, is furnished on Special Order.

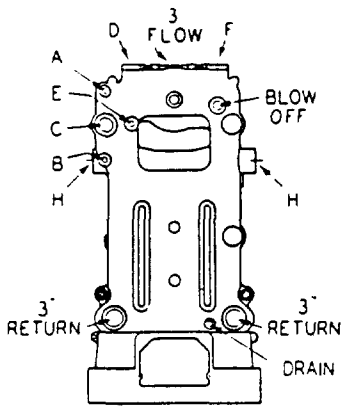

Back View — Showing Control Tappings

CONTROL APPLICATIONS

Location on Boiler	Steam Boilers	Vapor Boilers	Water Boilers
"A" & "B"	External Low Water Control or Feeder	External Low Water Control or Feeder	"A" Alternative Water Limit Control. "B" not Used
"C"	Internal Low Water Control	Internal Low Water Control	Water Limit Control
"D"	Pressure Control	Vapor Control	Not Used
"E"	Water Temp. Control	Water Temp. Control	Water Temp. Control
"F"	Safety Valve	Safety Valve	Not Used
"H"	Biltin Taco Water Heater	Biltin Taco Water Heater	Biltin Taco Water Heater
Smoke Pipe	Stack Control	Stack Control	Stack Control

Sizes of Control Tappings are as follows: "A"—1", "B"—1", "C"—2½", "D"—1½", "E"—1", "F"—1¼", "H"—2½".

For data on Biltin Taco Water Heaters see page 5.
For data on trimmings see page 7.

20983

OAKMONT BOILER

OIL FIRED

MEASUREMENTS AND TAPPINGS

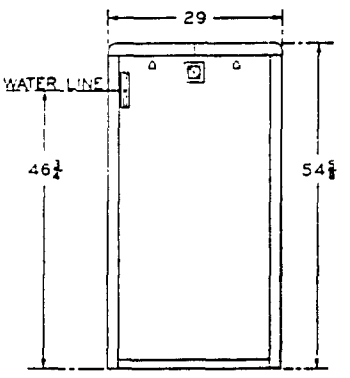

Front View

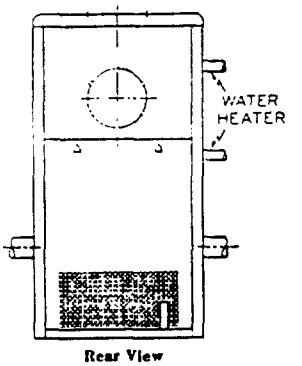

Rear View

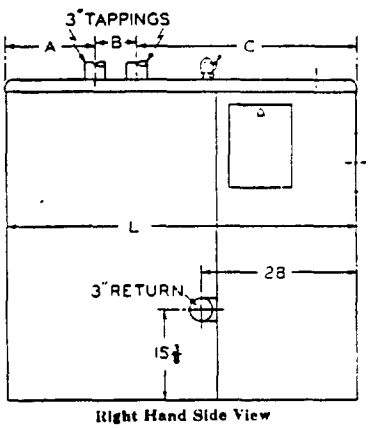

Right Hand Side View

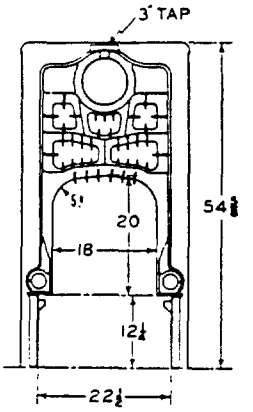

Center Section

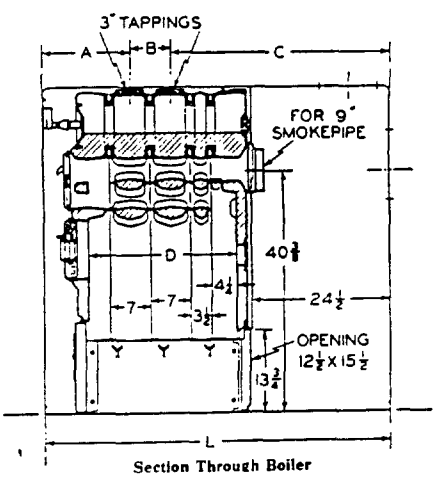

Section Through Boiler

OAKMONT BOILER

OIL FIRED

OUTLETS — INLETS — DIMENSIONS

Boiler No.		Number and Size of Tapping — Inches		Dimensions — Inches See Drawings — Opposite Page				
Steam	Water	Outlets	Inlets	A	B	C	D	L
S-84	W-84	1-3	2-3	14	.	35¼	15	49¼
S-85	W-85	1-3	2-3	14	.	38¾	18½	52¾
S-86	W-86	2-3	2-3	14	7	35¼	22	56¼
S-87	W-87	2-3	2-3	14	7	38¾	25½	59¾
S-88	W-88	2-3	2-3	14	14	35¼	29	63¼
S-89	W-89	2-3	2-3	14	14	38¾	32½	66¾

ASSEMBLAGE OF SECTIONS

Boiler No.		Arrangement of Sections	Legend
Steam	Water		
S-84	W-84	F-CX-B	F = 7" Front Section.
S-85	W-85	F-CX-NC-B	C = 7" Center Section.
S-86	W-86	F-CX-CX-B	CX = 7" Center Connecting Section.
S-87	W-87	F-CX-CX-NC-B	NC = 3½" Narrow Center Section.
S-88	W-88	F-CX-C-CX-B	B = 6½" Back Section.
S-89	W-89	F-CX-C-CX-NC-B	

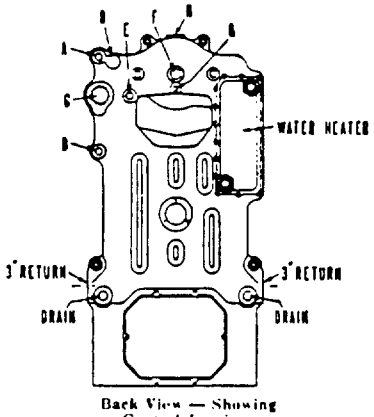

Back View — Showing Control Tappings

CONTROL APPLICATIONS

Location on Boiler	Steam Boilers	Vapor Boilers	Water Boilers
"A" & "B"	External Low Water Control or Feeder	External Low Water Control or Feeder	"A" Alternative Water Limit Control. "B" not Used
"C"	Internal Low Water Control	Internal Low Water Control	Water Limit Control
"D"	Not Used	Not Used	Not Used
"E"	Water Temp. Control	Water Temp. Control	Water Temp. Control
"F"	Blow-off	Blow-off	Alternative Water Limit Control
"G" or "H"	Pressure Control	Vapor Control	Not Used

Sizes of Control Tappings are as follows: "A"—1", "B"—1", "C"—2½", "E"—1", "F"—1½", "G"—½", "H"—1¼".

For data on Biltin Taco Water Heaters see page 6.
For data on trimmings see page 7.

20985

EXBROOK BOILER

OIL OR STOKER FIRED

MEASUREMENTS AND TAPPINGS

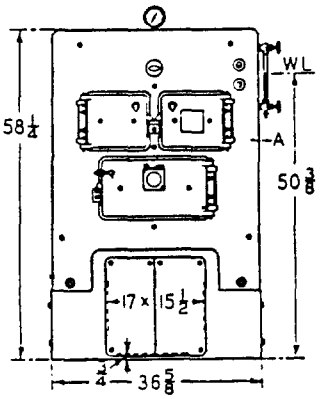

Front View — Oil Fired
Stoker Fired same except Slide Damper instead of Observation Glass.
(For Explanation of Dimension "A" see *"Control Application" on opposite page.*)

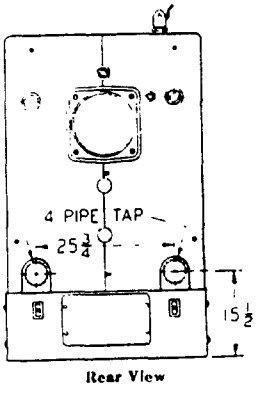

Rear View

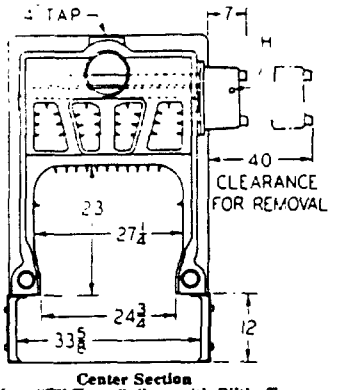

Center Section
Used on "T" Type Boilers with Biftin Taco Tank or Tankless Water Heaters (Tankless shown). Other Center Sections are similar (except for Taco opening) and have same dimensions.

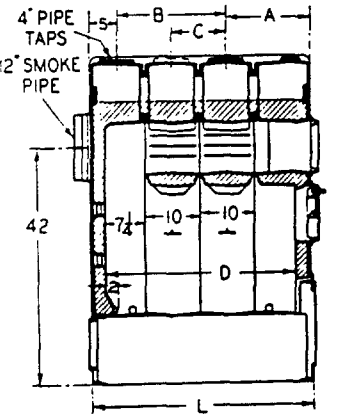

Section Through Boiler

20986

EXBROOK BOILER

OIL OR STOKER FIRED

OUTLETS — INLETS — DIMENSIONS

Boiler No.		Number and Size of Tappings — Inches		Dimensions — Inches See Drawings — Opposite Page				
Steam	Water	Flow	Return	A	B	C	D	L*
S-207	W-207	2-4	2-4	10	20		29½	35¼
S-208	W-208	2-4	2-4	15	20		34½	40¼
S-209	W-209	2-4	2-4	10	30		39½	45¼
S-2010	W-2010	2-4	2-4	15	30		44½	50¼
S-2011	W-2011	3-4	2-4	10	40	30	49½	55¼
S-2012	W-2012	3-4	2-4	15	40	30	54½	60¼

Note: Same data applies to "T" Type Exbrook Boiler, such as S-207-T, etc.
*Add 2¾ in. to length for Smoke Collar.

ASSEMBLAGE OF SECTIONS

Boiler No.		Regular Boiler Without Biltin Taco Water Heater	"T" Type Boiler With Biltin Taco Water Heater
Steam	Water		
S-207	W-207	AO-FCXO-CO-BX	AO-FCXO-COT-BX
S-208	W-208	FO-CXO-CO-BX	FO-CXO-COT-BX
S-209	W-209	AO-FCXO-CO-CO-BX	AO-FCXO-CO-COT-BX
S-2010	W-2010	FO-CXO-CO-CO-BX	FO-CXO-CO-COT-BX
S-2011	W-2011	AO-FCXO-CO-CO-RCXO-BX	AO-FCXO-COT-CO-RCXO-BX
S-2012	W-2012	FO-CXO-CO-CO-RCXO-BX	FO-CXO-COT-CO-RCXO-BX

LEGEND: AO = 5" Front Section; FO = 10" Front Section; CO = Center Section; COT = Center Section with opening for Biltin Taco Water Heater; CXO = Center Connecting Section; FCXO = Front Center Connecting Section; RCXO = Rear Center Connecting Section; BX = Back Connecting Section.

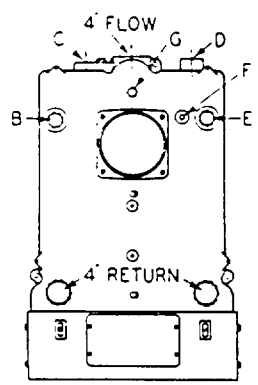

Back View — Showing Control Tappings

CONTROL APPLICATIONS

Tapping.....	A	B	C	D	E	F	G	H
Size, Inches..	1	2½	2	2	2½	¾	1½	¼

Location on Boiler	Steam Boilers	Vapor Boilers	Water Boilers
*"A" at Front Section	External Feeder	External Feeder	Reverse Act. Water Temp. Control
"B"	Internal Low Water Cut-off	Internal Low Water Cut-off	Water Limit Control
"C"	Pressure Control	Vapor Control	Alternate Water Limit Control
"D"	Safety Valve	Safety Valve	Relief Valve
"E"	External Water Heater	External Water Heater	External Water Heater
"F"	Water Temp. Control	Water Temp. Control	Water Temp. Control
"G"	Blow-off	Blow-off	Alternate Water Limit Control
** "H"	Water Temperature Control for Tankless Water Heaters		

*For Tapping "A" see Front View on page 20.
**For Tapping "H" see Center Section Drawing on page 20.
For data on Biltin Taco Water Heaters see page 6.
For data on Trimmings see page 7.

20987

No. 2 REDFLASH BOILER

COAL (HAND FIRED OR STOKER) OR OIL
MEASUREMENTS AND TAPPINGS

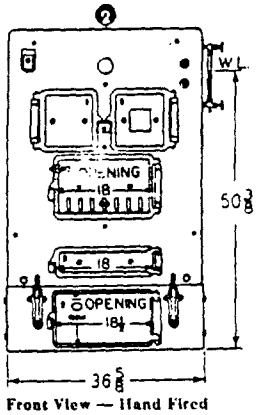

Front View — Hand Fired

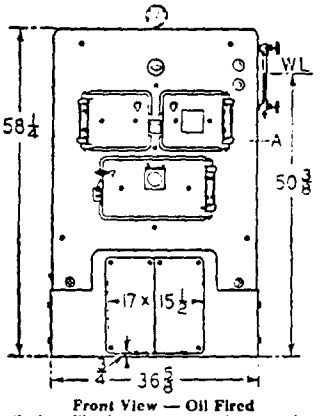

Front View — Oil Fired
Stoker Fired same except has regular Fire Door with Slide Damper.

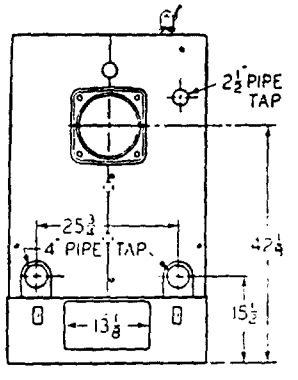

Rear View
Oil and Stoker Fired

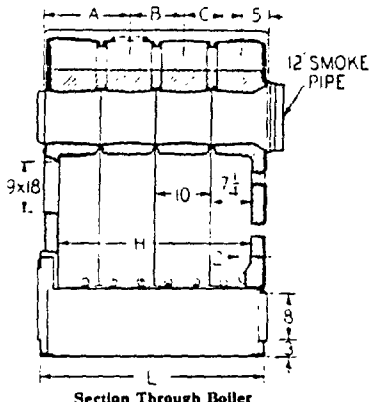

Section Through Boiler
Oil or Stoker Fired

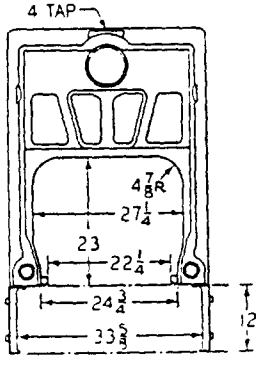

Center Section

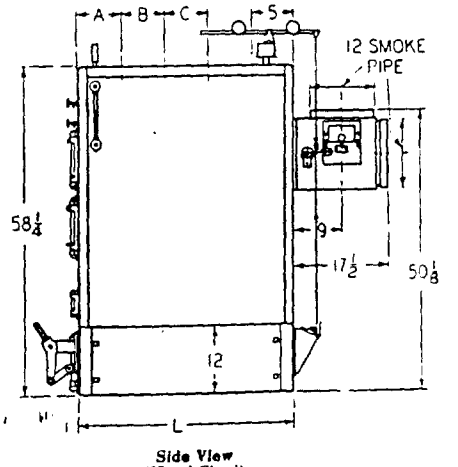

Side View
(Hand Fired)

No. 2 REDFLASH BOILER

COAL (HAND FIRED OR STOKER) OR OIL

OUTLETS — INLETS — DIMENSIONS

Tapped 2½" for External Water Heater

Boiler No.		*Number and Size of Tappings — Inches		*Dimensions — Inches See Drawings on Opposite Page				
Steam	Water	Outlet	Inlet	A	B	C	H	L**
†2-S-6	†2-W-6	2-4	2-4	15	.	..	24½	30
2-S-7	2-W-7	2-4	2-4	10	.	..	29½	35
2-S-8	2-W-8	2-4	2-4	15	.	..	34½	40
2-S-9	2-W-9	2-4	2-4	10	.	..	39½	45
2-S-10	2-W-10	2-4	2-4	15	.	..	44½	50
2-S-11	2-W-11	3-4	2-4	10	20	.	49½	55
2-S-12	2-W-12	3-4	2-4	15	30	.	54½	60
▲2-S-13	▲2-W-13	4-4	2-4	10	20	20	59½	65

*These dimensions and tappings apply to all No. 2 Redflash Boilers.
†Coal (Hand Fired) only.
▲Stoker (2-SC or WC-13) and Oil (2-S or W-13-0) only.
**On Hand Fired add 17½" to length for Smoke Hood. On Oil and Stoker Fired add 2¼" for Smoke Collar

ASSEMBLAGE OF SECTIONS

COAL (HAND FIRED OR STOKER)

Boiler No.		Arrangement of Sections
Steam	Water	
2-S-6	2-W-6	F-CX-BX
2-S-7	2-W-7	A-FCX-C-BX
2-S-8	2-W-8	F-CX-C-BX
2-S-9	2-W-9	A-FCX-C-C-BX
2-S-10	2-W-10	F-CX-C-C-BX
2-S-11	2-W-11	A-FCX-C-CX-C-BX
2-S-12	2-W-12	F-CX-C-C-RCX-BX
▲2-S-13	▲2-W-13	A-FCX-C-CX-C-RCX-BX

▲Stoker Fired (2-SC or WC-13) only.

OIL FIRED

2-S-7-O	2-W-7-O	AO-FCX-C-BX
2-S-8-O	2-W-8-O	FO-CX-C-BX
2-S-9-O	2-W-9-O	AO-FCX-C-C-BX
2-S-10-O	2-W-10-O	FO-CX-C-C-BX
2-S-11-O	2-W-11-O	AO-FCX-C-CX-C-BX
2-S-12-O	2-W-12-O	FO-CX-C-C-RCX-BX
2-S-13-O	2-W-13-O	AO-FCX-C-CX-C-RCX-BX

LEGEND

A = 5" Front Section
F = 10" Front Section
FCX = 10" Front Center Connecting Section
BX = 10" Back Connecting Section
C = 10" Center Section
CX = 10" Center Connecting Section
RCX = 10" Rear Center Connecting Section
AO = 5" Front Section (Oil)
FO = 10" Front Section (Oil)

For data on External Water Heaters see page 5.
For data on Trimmings see page 7.

20989

No. 3 REDFLASH BOILER

COAL (HAND FIRED OR STOKER) OR OIL
MEASUREMENTS AND TAPPINGS

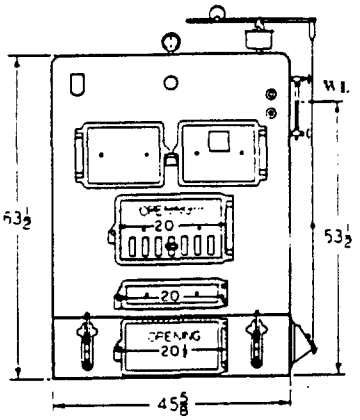

Front View — Hand Fired
Stoker Fired same except without Damper Regulator and Draft Pouch.

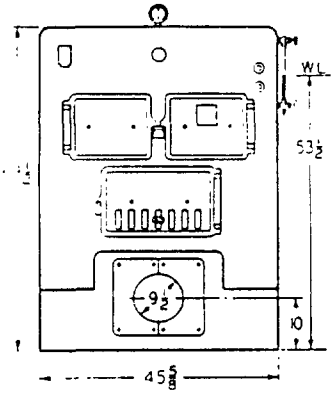

Front View
Oil Fired

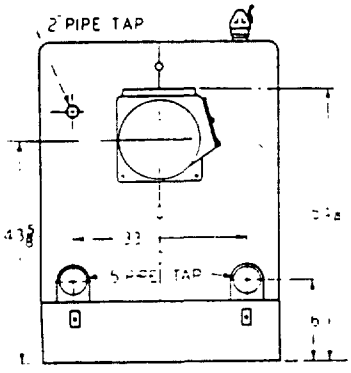

Rear View
Oil and Stoker Fired have Smoke Collar instead of Smoke Hood.

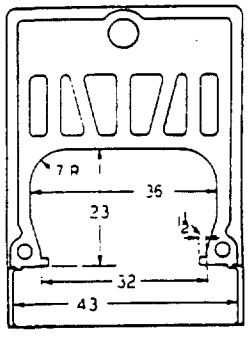

Center Section

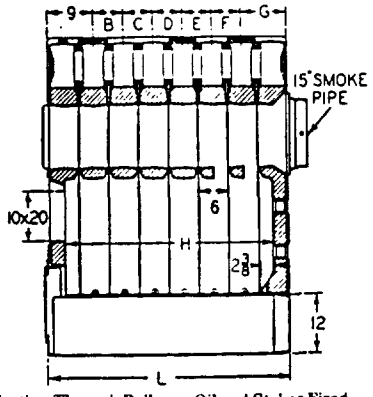

Section Through Boiler — Oil and Stoker Fired. Hand Fired same except has Smoke Hood instead of Smoke Collar. Also on both Hand Fired and Stoker, lower Waterway of Front Section extends to Base.

20990

No. 3 REDFLASH BOILER

COAL (HAND FIRED OR STOKER) OR OIL

OUTLETS — INLETS — DIMENSIONS

Tapped for 2" External Water Heater

Boiler No.		*No. and Size of Tappings — Ins.		*Dimensions — Inches See Drawings on Opposite Page							
Steam	Water	Outlet	Inlet	B	C	D	E	F	G	H	L**
†3-S-6	†3-W-6	2-4	2-5	18	..			.	9	29⅛	36
†3-S-7	†3-W-7	3-4	2-5	12	12			.	9	35¾	42
†3-S-8	†3-W-8	3-4	2-5	18	12	.		.	9	41⅜	48
3-S-9	3-W-9	4-4	2-5	12	12	12		.	9	47⅝	54
3-S-10	3-W-10	4-4	2-5	12	12	12	..	..	15	53¾	60
3-S-11	3-W-11	4-4	2-5	12	18	18	.	..	9	59¾	66
3-S-12	3-W-12	5-4	2-5	18	12	12	12	..	9	65¾	72
3-S-13	3-W-13	5-4	2-5	18	18	12	12	.	9	71⅜	78
▲3-S-14	▲3-W-14	6-4	2-5	12	12	18	12	12	9	77⅜	84

*These dimensions and tappings apply to all No. 3 Redflash Boilers.
†Hand Fired only.
▲Stoker (3-SC or WC-14) and Oil Fired (3-S or W-14-0) only.
**On Hand Fired add 21" to length for Smoke Hood. On Oil and Stoker Fired add 3¼" for Smoke Collar.

ASSEMBLAGE OF SECTIONS

COAL (HAND FIRED OR STOKER)

Boiler No.		Arrangement of Sections
Steam	Water	
3-S-6	3-W-6	F-FCX-C-C-RCX-B
3-S-7	3-W-7	F-FCX-C-CX-C-RCX-B
3-S-8	3-W-8	F-FCX-C-C-CX-RC-RCX-B
3-S-9	3-W-9	F-FCX-C-CX-C-CX-RC-RCX-B
3-S-10	3-W-10	F-FCX-C-CX-C-CX-C-RCX-RC-B
3-S-11	3-W-11	F-FCX-C-CX-C-C-CX-C-RC-RCX-B
3-S-12	3-W-12	F-FCX-C-C-CX-C-CX-C-RCX-RC-RCX-B
3-S-13	3-W-13	F-FCX-C-C-CX-C-C-CX-C-RCX-RC-RCX-B
▲3-S-14	▲3-W-14	F-FCX-C-CX-C-CX-C-C-CX-C-RCX-RC-RCX-B

▲Stoker Fired (3-SC or WC-14) only.

OIL FIRED

3-S-9-O	3-W-9-O	FO-FCX-C-CX-C-CX-RC-RCX-B
3-S-10-O	3-W-10-O	FO-FCX-C-CX-C-CX-C-RCX-RC-B
3-S-11-O	3-W-11-O	FO-FCX-C-CX-C-C-CX-C-RC-RCX-B
3-S-12-O	3-W-12-O	FO-FCX-C-C-CX-C-CX-C-CX-RC-RCX-B
3-S-13-O	3-W-13-O	FO-FCX-C-C-CX-C-C-CX-C-CX-RC-RCX-B
3-S-14-O	3-W-14-O	FO-FCX-C-CX-C-CX-C-C-CX-C-CX-RC-RCX-B

LEGEND

F = 6" Front Section (Coal)
FO = 6" Front Section (Oil)
FCX = 6" Front Center Connecting Section
C = 6" Center Section
CX = 6" Center Connecting Section
RC = 6" Rear Center Section
RCX = 6" Rear Center Connecting Section
B = 6" Back Section

For data on External Water Heaters see page 5.
For data on trimmings see page 7.

20991

No. 4 REDFLASH BOILER

COAL (HAND FIRED OR STOKER) OR OIL
MEASUREMENTS AND TAPPINGS

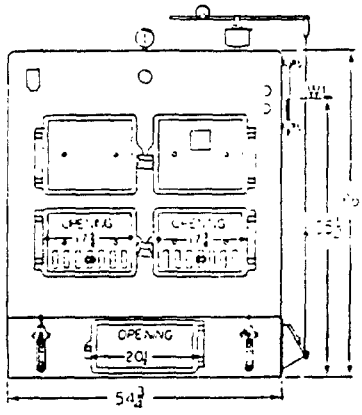

Front View — Hand Fired
Stoker Fired same except without Damper Regulator and Draft Pouch.

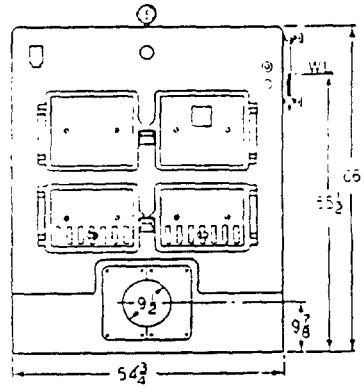

Front View
Oil Fired

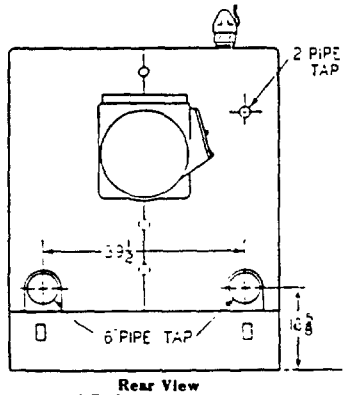

Rear View
Oil and Stoker Fired have Smoke Collar instead of Smoke Hood.

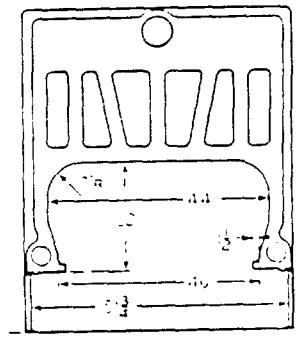

Center Section

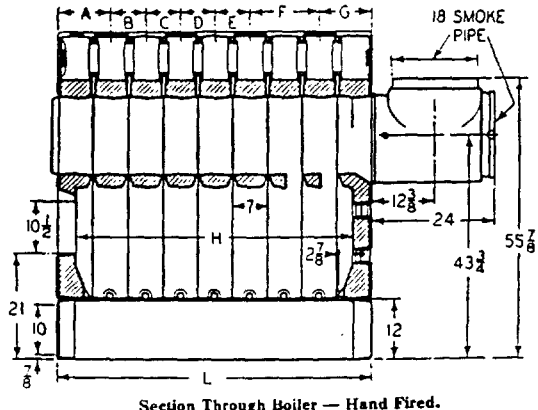

Section Through Boiler — Hand Fired.
Oil and Stoker Fired same except have Smoke Collar instead of Smoke Hood, also on Oil Fired lower Waterway of Front Section does not extend to Base.

20992

No. 4 REDFLASH BOILER

COAL (HAND FIRED OR STOKER) OR OIL

OUTLETS — INLETS — DIMENSIONS

Tapped for 2" External Water Heater

Boiler No.		*No. and Size of Tappings, Inches		*Dimensions — Inches See Drawings on Opposite Page								
Steam	Water	Outlet	Inlet	A	B	C	D	E	F	G	H	L**
†4-S-7	†4-W-7	3-4	2-6	10½	14	14	.		..	10½	41⅝	49
†4-S-8	†4-W-8	3-4	2-6	10½	14	14	.	.	..	17½	48⅛	56
†4-S-9	†4-W-9	4-4	2-6	10½	14	14	14	..	.	10½	55⅛	63
4-S-10	4-W-10	4-4	2-6	10½	14	14	14	.	..	17½	62⅝	70
4-S-11	4-W-11	5-4	2-6	10½	14	14	14	14	.	10½	69⅛	77
4-S-12	4-W-12	5-4	2-6	10½	14	14	14	14		17½	76⅝	84
4-S-13	4-W-13	6-4	2-6	10½	14	14	14	14	14	10½	83⅛	91
▲4-S-14	▲4-W-14	6-4	2-6	10½	14	14	14	14	14	17½	90⅝	98

*These dimensions and tappings apply to all No. 4 Redflash Boilers.
▲Oil (4-S or W-14-0)and Stoker Fired (4-SC or WC-14) only.
†Hand Fired only.
**On Hand Fired add 24" to length for Smoke Hood. On Oil and Stoker Fired add 3¼" for Smoke Collar.

ASSEMBLAGE OF SECTIONS

COAL (HAND FIRED OR STOKER)

Boiler No.		Arrangement of Sections
Steam	Water	
4-S-7	4-W-7	F-FCX-C-CX-RC-RCX-B
4-S-8	4-W-8	F-FCX-C-CX-C-RCX-RC-B
4-S-9	4-W-9	F-FCX-C-CX-C-RCX-RC-RCX-B
4-S-10	4-W-10	F-FCX-C-CX-C-CX-RC-RCX-RC-B
4-S-11	4-W-11	F-FCX-C-CX-C-CX-C-RCX-RC-RCX-B
4-S-12	4-W-12	F-FCX-C-CX-C-CX-C-CX-RC-RCX-RC-B
4-S-13	4-W-13	F-FCX-C-CX-C-CX-C-CX-C-RCX-RC-RCX-B
▲4-S-14	▲4-W-14	F-FCX-C-CX-C-CX-C-CX-C-CX-RC-RCX-RC-B

▲Stoker Fired (4-SC or WC-14) only.

OIL FIRED

4-S-10-O	4-W-10-O	FO-FCX-C-CX-C-CX-C-RCX-RC-B
4-S-11-O	4-W-11-O	FO-FCX-C-CX-C-CX-C-CX-RC-RCX-B
4-S-12-O	4-W-12-O	FO-FCX-C-CX-C-CX-C-CX-RC-RCX-RC-B
4-S-13-O	4-W-13-O	FO-FCX-C-CX-C-CX-C-CX-C-RCX-RC-RCX-B
4-S-14-O	4-W-14-O	FO-FCX-C-CX-C-CX-C-CX-C-CX-RC-RCX-RC-B

LEGEND

F = 7" Front Section
FO = 7" Front Section (Oil)
FCX = 7" Front Center Connecting Section
C = 7" Center Section
CX = 7" Center Connecting Section
RC = 7" Rear Center Section
RCX = 7" Rear Center Connecting Section
B = 7" Back Section

For data on External Water Heaters see page 5.
For data on trimmings see page 7.

20993

No. 5 REDFLASH BOILER

COAL (HAND FIRED OR STOKER) OR OIL
MEASUREMENTS AND TAPPINGS

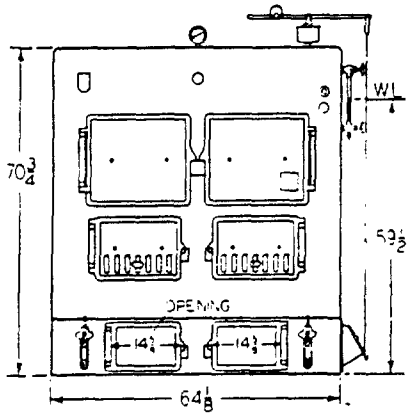

Front View — Hand Fired
Stoker Fired same without
Damper Regulator and Draft Pouch

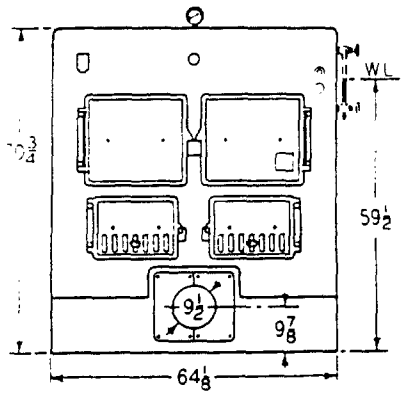

Front View
Oil Fired

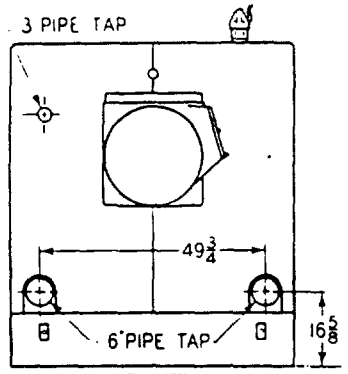

Rear View
Oil and Stoker Fired have Smoke
Collar instead of Smoke Hood.

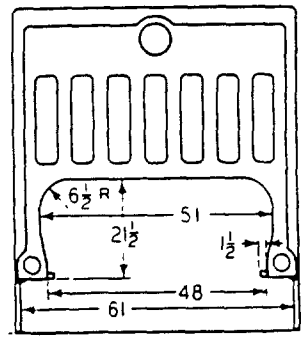

Center Section

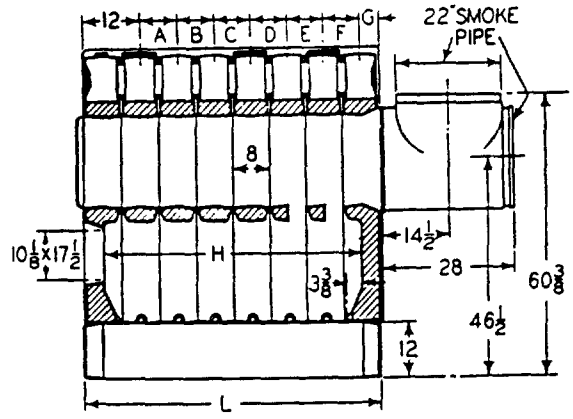

Section Through Boiler — Hand Fired.
Oil and Stoker Fired same except have Smoke Collar instead of Smoke Hood. Also on Oil Fired lower Waterway of Front Section does not extend to Base.

20994

No. 5 REDFLASH BOILER

COAL (HAND FIRED OR STOKER) OR OIL

OUTLETS — INLETS — DIMENSIONS

Tapped for 3″ External Water Heater

Boiler No.		*No. and Size of Tappings, Inches		*Dimensions — Inches See Drawings on Opposite Page								
Steam	Water	Outlet	Inlet	A	B	C	D	E	F	G	H	L**
†5-S-8	†5-W-8	3-S	2-6	24	16	...	...	...	...	12	55¾	64
†5-S-9	†5-W-9	4-S	2-6	16	16	16	...	...	...	12	63¾	72
5-S-10	5-W-10	4-S	2-6	16	24	16	...	...	...	12	71¾	80
5-S-11	5-W-11	5-S	2-6	16	16	16	16	...	...	12	79¾	88
5-S-12	5-W-12	5-S	2-6	16	16	16	16	...	...	20	87¾	96
5-S-13	5-W-13	5-S	2-6	16	24	16	24	...	...	12	95¾	104
5-S-14	5-W-14	6-S	2-6	16	16	24	16	16	...	12	103¾	112
5-S-15	5-W-15	6-S	2-6	16	24	16	24	16	...	12	111¾	120
▲5-S-16	▲5-W-16	7-S	2-6	16	16	16	16	16	16	20	119¾	128
▲5-S-17	▲5-W-17	7-S	2-6	16	24	16	24	16	16	12	127¾	136

*These dimensions and tappings apply to all No. 5 Redflash Boilers.
†Hand Fired only.
▲Oil (5-S or W-16-0 and 5-S or W-17-0) and Stoker Fired (5-SC or WC-16 and 5-SC or WC-17) only.
**On Hand Fired add 28″ to length for Smoke Hood. On Oil and Stoker Fired add 3¼″ for Smoke Collar.

ASSEMBLAGE OF SECTIONS
COAL (HAND FIRED OR STOKER)

Boiler No.		Arrangement of Sections
Steam	Water	
5-S-8	5-W-8	F-FCX-C-C-CX-RC-RCX-B
5-S-9	5-W-9	F-FCX-C-CX-C-CX-RC-RCX-B
5-S-10	5-W-10	F-FCX-C-CX-C-C-CX-RC-RCX-B
5-S-11	5-W-11	F-FCX-C-CX-C-CX-C-CX-RC-RCX-B
5-S-12	5-W-12	F-FCX-C-CX-C-CX-C-CX-†BW-RCX-RC-BD
5-S-13	5-W-13	F-FCX-C-CX-C-C-CX-C-CX-†BW-RC-RCX-BD
5-S-14	5-W-14	F-FCX-C-CX-C-CX-C-C-CX-†BW-RCX-RC-RCX-BD
5-S-15	5-W-15	F-FCX-C-CX-C-C-CX-C-CX-C-†BW-RCX-RC-RCX-BD
▲5-S-16	▲5-W-16	F-FCX-C-CX-C-CX-C-CX-C-CX-C-RCX-RC-RCX-RC-BD
▲5-S-17	▲5-W-17	F-FCX-C-CX-C-C-CX-C-CX-C-C-RCX-RC-RCX-RC-RCX-BD

▲Stoker Fired (5-SC or WC-16 and 5-SC or WC-17) only. †When Stoker Fired a "C" Section applies.

OIL FIRED

5-S-10-O	5-W-10-O	FO-FCX-C-CX-C-C-CX-RC-RCX-B
5-S-11-O	5-W-11-O	FO-FCX-C-CX-C-CX-C-CX-RC-RCX-B
5-S-12-O	5-W-12-O	FO-FCX-C-CX-C-CX-C-CX-C-RCX-RC-B
5-S-13-O	5-W-13-O	FO-FCX-C-CX-C-C-CX-C-CX-C-RC-RCX-B
5-S-14-O	5-W-14-O	FO-FCX-C-CX-C-CX-C-C-CX-C-RCX-RC-RCX-B
5-S-15-O	5-W-15-O	FO-FCX-C-CX-C-C-CX-C-CX-C-C-RCX-RC-RCX-B
5-S-16-O	5-W-16-O	FO-FCX-C-CX-C-CX-C-CX-C-CX-C-RCX-RC-RCX-RC-B
5-S-17-O	5-W-17-O	FO-FCX-C-CX-C-C-CX-C-CX-C-C-RCX-RC-RCX-RC-RCX-B

LEGEND

F = 8″ Front Section
FO = 8″ Front Section (Oil)
FCX = 8″ Front Center Connecting Section
C = 8″ Center Section
CX = 8″ Center Connecting Section
BW = 8″ Bridgewall Section
RCX = 8″ Rear Center Connecting Section
RC = 8″ Rear Center Section
B = 8″ Back Section
BD = 8″ Back Section with Cleanout Door

For data on External Water Heaters see page 5.
For data on trimmings see page 7.

20995

REDFLASH BOILERS

COAL (HAND FIRED)

ASHPIT DIMENSIONS

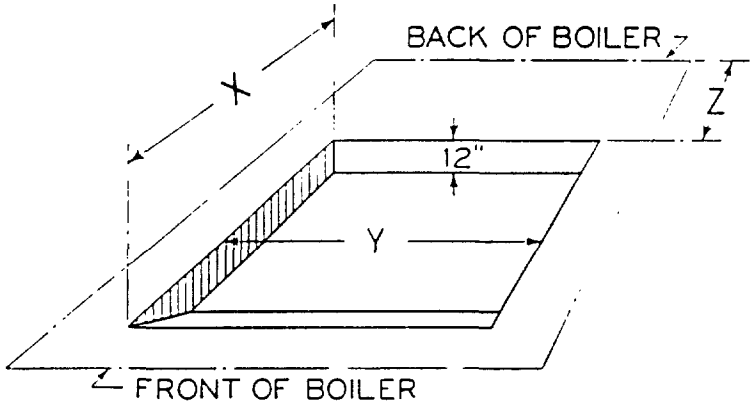

No. 2 REDFLASH BOILER

Number of Sections	Dimensions in Inches			
	Depth	"X"	"Y"	"Z"
6	12	22	29	4
7	12	27	29	4
8	12	32	29	4
9	12	37	29	4
10	12	42	29	4
11	12	47	29	4
12	12	52	29	4

No. 3 REDFLASH BOILER

Number of Sections	Dimensions in Inches			
	Depth	"X"	"Y"	"Z"
6	12	28	39	4
7	12	34	39	4
8	12	40	39	4
9	12	46	39	4
10	12	52	39	4
11	12	58	39	4
12	12	64	39	4
13	12	70	39	4
14	12	76	39	4

No. 4 REDFLASH BOILER

Number of Sections	Dimensions in Inches			
	Depth	"X"	"Y"	"Z"
7	12	39	47	5
8	12	46	47	5
9	12	53	47	5
10	12	60	47	5
11	12	67	47	5
12	12	74	47	5
13	12	81	47	5
14	12	88	47	5

No. 5 REDFLASH BOILER

Number of Sections	Dimensions in Inches			
	Depth	"X"	"Y"	"Z"
8	12	54	57	5
9	12	62	57	5
10	12	70	57	5
11	12	78	57	5
12	12	61	57	30
13	12	69	57	30
14	12	69	57	38
15	12	77	57	38

20996

REDFLASH BOILERS

COAL (HAND FIRED)

ARRANGEMENT OF GRATE BARS

No. 2 REDFLASH BOILER

Boiler No.		Left Front	Right Rear
Steam	Water		
2-S-6	2-W-6	4	..
2-S-7	2-W-7	5	..
2-S-8	2-W-8	6	..
2-S-9	2-W-9	7	..
2-S-10	2-W-10	4	4
2-S-11	2-W-11	5	4
2-S-12	2-W-12	5	5

No. 3 REDFLASH BOILER

Boiler No.		Left Front	Right Rear
Steam	Water		
3-S-6	3-W-6	4	..
3-S-7	3-W-7	3	2
3-S-8	3-W-8	3	3
3-S-9	3-W-9	4	3
3-S-10	3-W-10	4	4
3-S-11	3-W-11	5	4
3-S-12	3-W-12	5	5
3-S-13	3-W-13	6	5
3-S-14	3-W-14	6	6

No. 4 REDFLASH BOILER

Boiler No.		Left Front	Right Rear
Steam	Water		
4-S-7	4-W-7	3	2
4-S-8	4-W-8	3	3
4-S-9	4-W-9	4	3
4-S-10	4-W-10	4	4
4-S-11	4-W-11	5	4
4-S-12	4-W-12	5	5
4-S-13	4-W-13	6	5
4-S-14	4-W-14	6	6

No. 5 REDFLASH BOILER

Boiler No.		Left Front	Right Rear	Dead Plates		
Steam	Water			Single	Double	Rear
5-S-8	5-W-8	3	3	..	..	.
5-S-9	5-W-9	4	3	..	..	..
5-S-10	5-W-10	4	4	..	..	..
5-S-11	5-W-11	5	4	..	..	..
5-S-12	5-W-12	4	3	1	..	1
5-S-13	5-W-13	4	4	1	.	1
5-S-14	5-W-14	4	4		1	1
5-S-15	5-W-15	5	4	..	1	1

20997

No. 29 WATER TUBE BOILER

OIL OR STOKER
MEASUREMENTS AND TAPPINGS

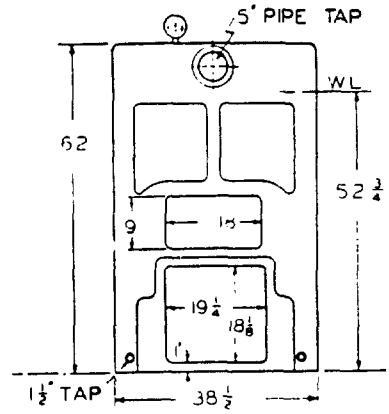

Front View
Oil and Stoker

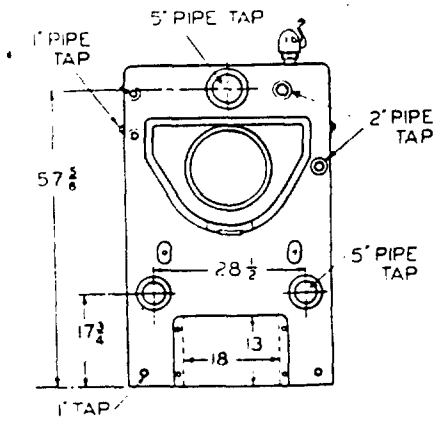

Rear View
Oil and Stoker

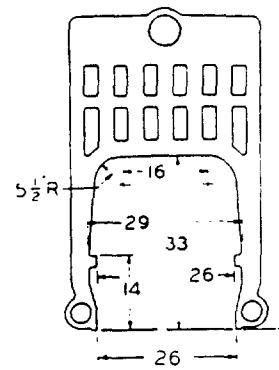

Center Section

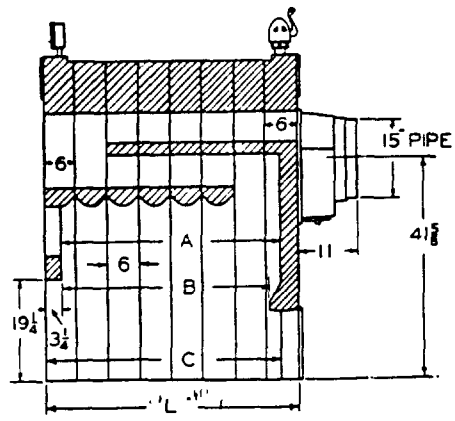

Section Through Boiler
Oil and Stoker

20998

No. 29 WATER TUBE BOILER

OIL OR STOKER

OUTLETS — INLETS — DIMENSIONS

Tapped 2" for External Water Heater

Boiler No. — Steam or Water		Number and Size of Tappings — Inches		Dimensions — Inches See Drawings — Opposite Page			
Stoker	Oil	Outlets	Inlets	A	B	C	L*
29-T-5		2-5	2-5	23½	21	26¾	30
29-T-6	0629	2-5	2-5	29½	27	32¾	36
29-T-7	0729	2-5	2-5	35½	33	38¾	42
29-T-8	0829	2-5	2-5	41½	39	44¾	48
29-T-9	0929	2-5	2-5	47½	45	50¾	54
29-T-10	1029	2-5	2-5	53½	51	56¾	60
29-T-11	1129	2-5	2-5	59½	57	62¾	66
29-T-12		2-5	2-5	65½	63	68¾	72

*Add 11 in. to length for Smoke Hood.

ASSEMBLAGE OF SECTIONS

OIL FIRED

S-0629	W-0629	AO-CO-CO-CO-UO-H
S-0729	W-0729	AO-CO-CO-CO-CO-UO-H
S-0829	W-0829	AO-BO-CO-CO-CO-CO-UO-H
S-0929	W-0929	AO-BO-CO-CO-CO-CO-CO-UO-H
S-1029	W-1029	AO-BO-CO-CO-CO-CO-CO-CO-UO-H
S-1129	W-1129	AO-BO-CO-CO-CO-CO-CO-CO-UO-UO-H

STOKER FIRED

SC-29-T-5	WC-29-T-5	AO-CO-CO-UO-H
SC-29-T-6	WC-29-T-6	AO-CO-CO-CO-UO-H
SC-29-T-7	WC-29-T-7	AO-CO-CO-CO-CO-UO-H
SC-29-T-8	WC-29-T-8	AO-BO-CO-CO-CO-CO-UO-H
SC-29-T-9	WC-29-T-9	AO-BO-CO-CO-CO-CO-CO-UO-H
SC-29-T-10	WC-29-T-10	AO-BO-CO-CO-CO-CO-CO-CO-UO-H
SC-29-T-11	WC-29-T-11	AO-BO-CO-CO-CO-CO-CO-CO-UO-UO-H
SC-29-T-12	WC-29-T-12	AO-BO-CO-CO-CO-CO-CO-CO-CO-UO-UO-H

LEGEND

AO = 6" Front Section (Oil-Stoker)
BO = 6" Front Center Connecting Section
CO = 6" Center Section
UO = 6" Rear Center Uptake Section
H = 6" Back Section

For data on External Water Heaters see page 5.
For data on trimmings see page 7.

20999

No. 36 WATER TUBE BOILER

OIL OR STOKER

MEASUREMENTS AND TAPPINGS

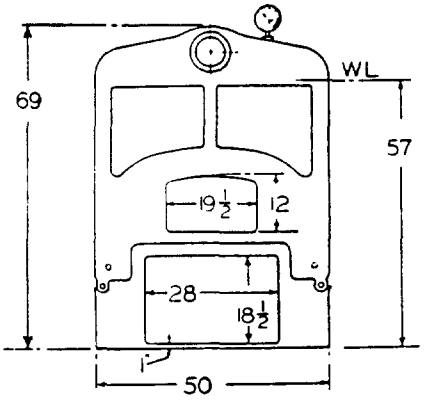

Front View
Oil and Stoker

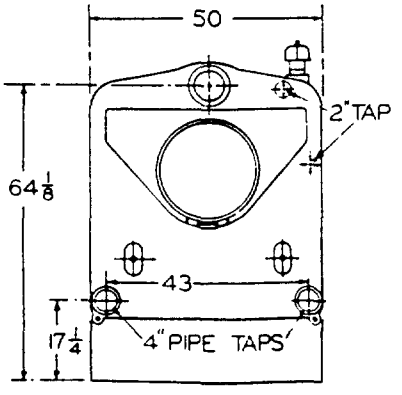

Rear View
Oil and Stoker

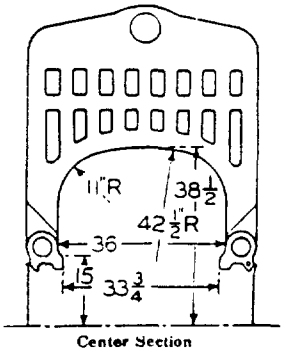

Center Section

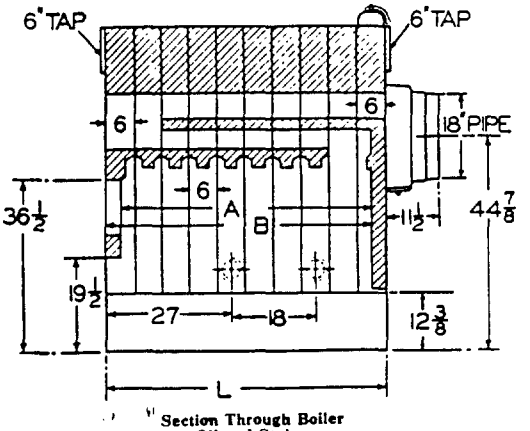

Section Through Boiler
Oil and Stoker

No. 36 WATER TUBE BOILER

OIL OR STOKER

OUTLETS — INLETS — DIMENSIONS

Tapped 2" for External Water Heater

Size of Boiler	No. and Size of Tappings — Inches				Dimensions — Inches See Drawings — Opposite Page		
	Steam		Water				
	Outlets	Inlets	Outlets	Inlets	A	B	L*
6 Sections	2-6	2-4	2-6	2-4	29½	32¾	36
7 Sections	2-6	2-4	2-6	2-3½ & 2-4	35½	38¾	42
8 Sections	2-6	2-4	2-6	2-3½ & 2-4	41½	44¾	48
9 Sections	2-6	2-4	2-6	2-3½ & 2-4	47½	50¾	54
10 Sections	2-6	2-4	2-6	2-3½ & 2-4	53½	56¾	60
11 Sections	2-6	2-4	2-6	2-3½ & 2-4	59½	62¾	66
12 Sections	2-6	2-4	2-6	4-3½ & 2-4	65½	68¾	72
13 Sections	2-6	2-4	2-6	4-3½ & 2-4	71½	74¾	78

*Add 11½" to length for Smoke Hood.

ASSEMBLAGE OF SECTIONS

OIL FIRED

Boiler No.	Steam Assemblage	Boiler No.	Water Assemblage
S-0736	AO-CTO-3CO-UO-H	W-0736	AO-CTO-2CO-DO-UO-H
S-0836	AO-CTO-4CO-UO-H	W-0836	AO-CTO-2CO-DO-CO-UO-H
S-0936	AO-BO-5CO-UO-H	W-0936	AO-BO-2CO-DO-2CO-UO-H
S-1036	AO-BO-6CO-UO-H	W-1036	AO-BO-2CO-DO-3CO-UO-H
S-1136	AO-BO-7CO-UO-H	W-1136	AO-BO-2CO-DO-4CO-UO-H
S-1236	AO-BO-7CO-2UO-H	W-1236	AO-BO-2CO-DO-2CO-DO-CO-2UO-H

STOKER FIRED

Boiler No.	Steam Assemblage	Boiler No.	Water Assemblage
SC-36-T-6	AO-CTO-2CO-UO-H	WC-36-T-6	AO-CTO-2CO-UO-H
SC-36-T-7	AO-CTO-3CO-UO-H	WC-36-T-7	AO-CTO-2CO-DO-UO-H
SC-36-T-8	AO-CTO-4CO-UO-H	WC-36-T-8	AO-CTO-2CO-DO-CO-UO-H
SC-36-T-9	AO-BO-5CO-UO-H	WC-36-T-9	AO-BO-2CO-DO-2CO-UO-H
SC-36-T-10	AO-BO-6CO-UO-H	WC-36-T-10	AO-BO-2CO-DO-3CO-UO-H
SC-36-T-11	AO-BO-7CO-UO-H	WC-36-T-11	AO-BO-2CO-DO-4CO-UO-H
SC-36-T-12	AO-BO-7CO-2UO-H	WC-36-T-12	AO-BO-2CO-DO-2CO-DO-CO-2UO-H

LEGEND

AO = Front Section (Oil Fired-Stoker)
BO = Front Center Section
CTO = Center Section (with Regulator Tappings)
DO = Center Connecting Section (with 2-3½" Return Tappings)
CO = Center Section
UO = Rear Center Uptake Section
H = Back Section

For data on External Water Heaters see page 5.
For data on trimmings, see page 7.

21001

EMPIRE GAS BOILERS

MEASUREMENTS, DATA AND TAPPINGS

TYPE 1-GA-E (WATER BOILER)

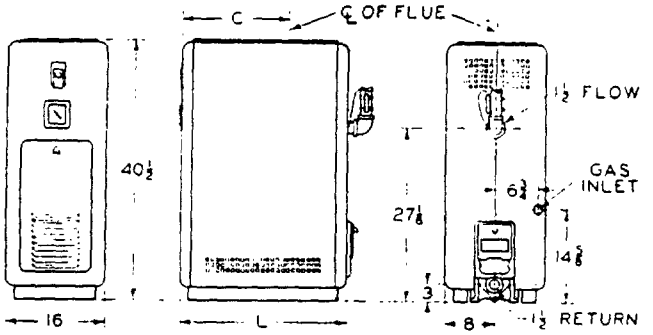

Boiler No.	No. of Sections	No. of Burners	C	L	Diam. Flue	Gas Conn.
1-GA-4-E	4	1	12¾	19¼	3	¾
1-GA-5-E	5	1	14⅛	22¼	4	¾
1-GA-6-E	6	1	15⅝	25¼	4	¾

TYPE 2-GA-E (WATER BOILER)

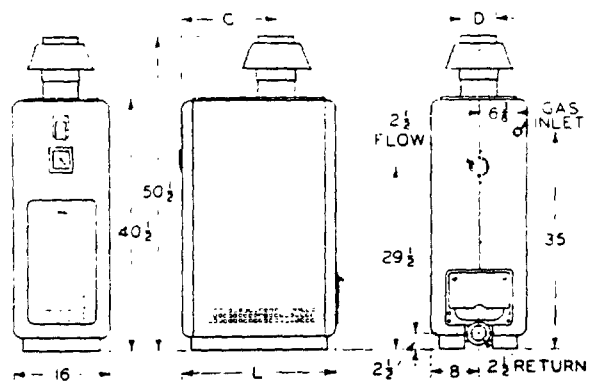

Boiler No.	No. of Sections	No. of Burners	C	D (Diam. Flue)	L	Gas Conn.
2-GA-4-E	4	2	12⅝	5	19¼	¾
2-GA-5-E	5	2	14⅛	5	22¼	¾
2-GA-6-E	6	2	15⅝	6	25¼	1
2-GA-7-E	7	2	17⅛	6	28¼	1¼

Note: All dimensions are in Inches.
For data on trimmings see page 7.

21002

EMPIRE GAS BOILERS

MEASUREMENTS, DATA AND TAPPINGS

TYPE 4-GA-E (WATER BOILER)

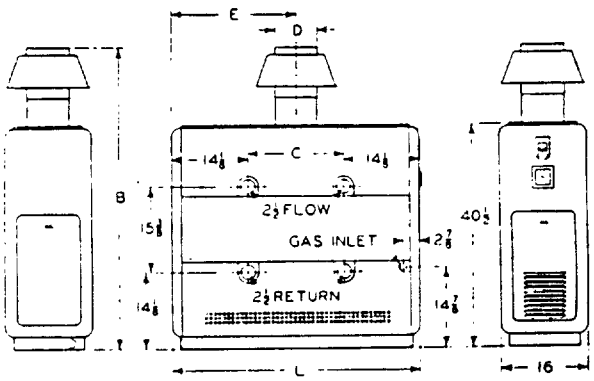

Boiler No.	No. of Sections	No. of Burners	B	C	D (Diam. Flue)	E	L	Gas Conn.
4-GA-8-E	8	4	54	9	7	18⅝	37¼	1¼
4-GA-9-E	9	4	54½	12	7	20⅛	40¼	1¼
4-GA-11-E	11	4	54½	18	8	23⅛	46¼	1¼
4-GA-13-E	13	4	56	24	9	26⅛	52¼	1½

TYPE O-GS-E (STEAM BOILER)

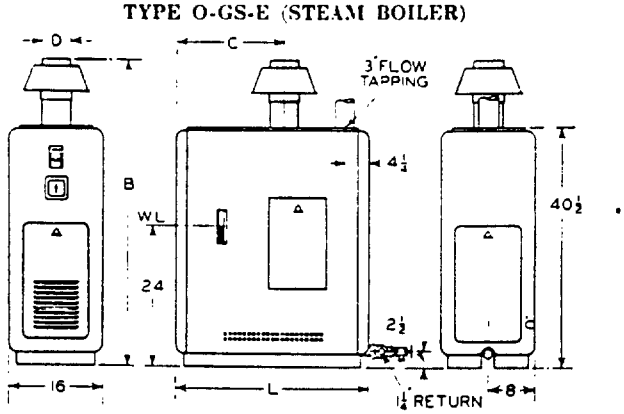

Boiler No.	No. of Sections	No. of Burners	B	C	D (Diam. Flue)	L	Gas Conn.
O-GS-4-E	4	2	52¼	18⅞	5	33¾	1
O-GS-5-E	5	2	53	20⅞	5	37¾	1
O-GS-6-E	6	2	52½	22⅞	6	41¾	1

Note: All dimensions are in Inches.
For data on trimmings see page 7.
Note: 1¼" Return Tapping for O-GS-E Steam Boiler may be increased to 1½" if necessary.

21003

EMPIRE GAS BOILERS

MEASUREMENTS, DATA AND DIMENSIONS

TYPE 1-G-E (STEAM AND WATER BOILER)

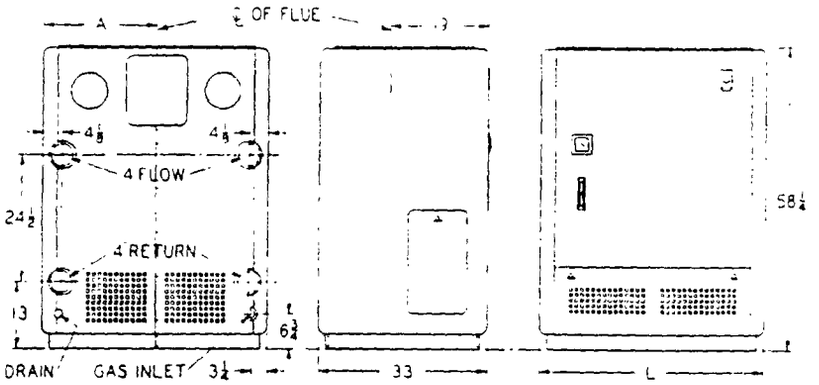

Boiler No.	No. of Sections	No. of Burners	A	L	Diam. of Flue	Gas Conn.
1-G-4-E	4	3	16	32	6	1¼
1-G-5-E	5	4	18	36	7	1¼
1-G-6-E	6	5	20	40	8	1¼
1-G-7-E	7	6	22	44	8	1½
1-G-8-E	8	7	24	48	9	1½
1-G-9-E	9	8	26	52	9	2
1-G-10-E	10	9	28	56	9	2

Note: Height to Water Line of 1-G-E Steam Boiler is 30".
Note: All dimensions are in Inches.
For data on trimmings see page 7.

21004

STANDARD GAS BOILERS

MEASUREMENTS, DATA AND TAPPINGS

TYPE 1-GA (WATER BOILER)

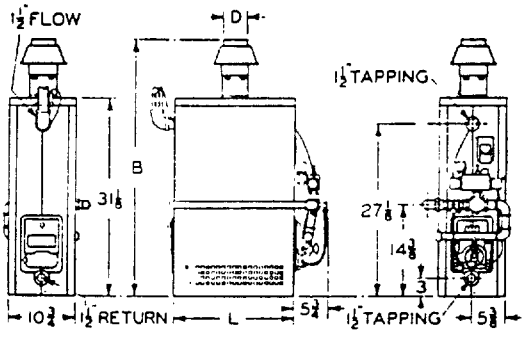

Boiler No.	No. of Sections	No. of Burners	D (Diam. Flue)	L	B	Gas Conn.
1-GA-4	4	1	3	13¾	40½	¾
1-GA-5	5	1	4	16¾	40½	¾
1-GA-6	6	1	4	19¾	40½	¾

TYPE 2-GA (WATER BOILER)

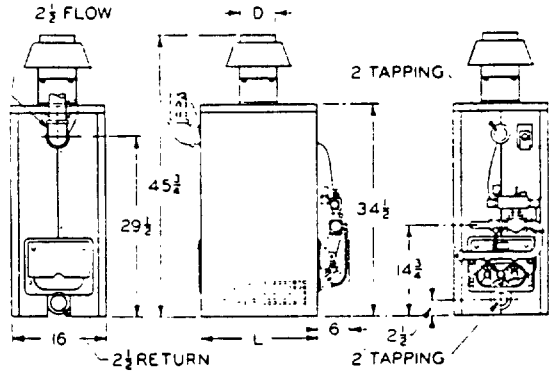

Boiler No.	No. of Sections	No. of Burners	D (Diam. Flue)	L	Gas Conn.
2-GA-4	4	2	5	13¾	¾
2-GA-5	5	2	5	16¾	¾
2-GA-6	6	2	6	19¾	1
2-GA-7	7	2	6	22¾	1¼

Note: All dimensions are in Inches.
For data on trimmings see page 7.

21005

STANDARD GAS BOILERS

MEASUREMENTS, DATA AND TAPPINGS

TYPE 4-GA (WATER BOILER)

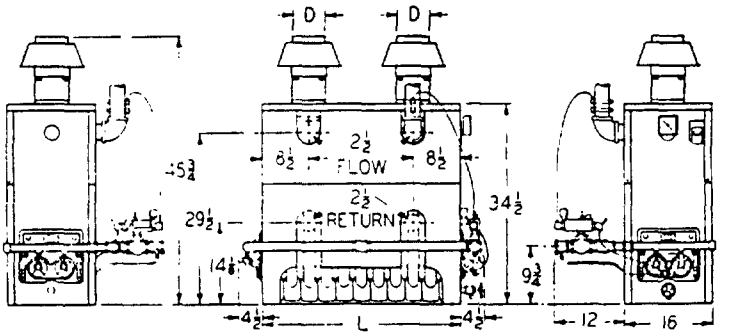

Boiler No.	No. of Sections	No. of Burners	D (Diam. Flue)	L	Gas Conn.
4-GA-9	9	4	5	29	1¼
4-GA-11	11	4	6	35	1¼
4-GA-13	13	4	6	41	*1¼

*"1½" for Manufactured Gas.

TYPE 1-G (STEAM OR WATER BOILER)

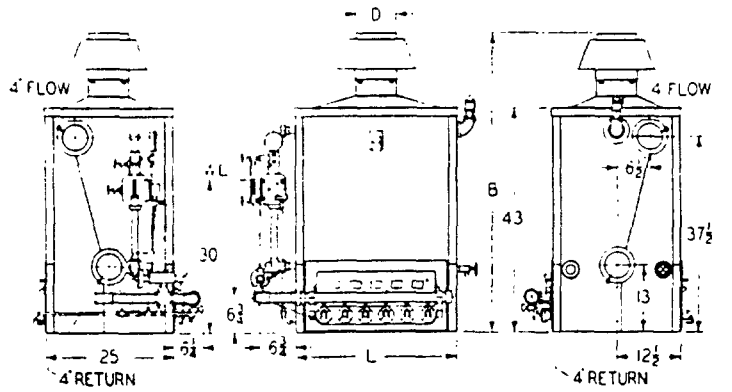

Boiler No.	No. of Sections	No. of Burners	B	D (Diam. Flue)	L	Gas Conn.
1-G-4	4	3	54½	6	19	1¼
1-G-5	5	4	56¾	7	23	1¼
1-G-6	6	5	56½	8	27	1¼
1-G-7	7	6	57	8	31	1½
1-G-8	8	7	59¼	9	35	1½
1-G-9	9	8	58½	9	39	2
1-G-10	10	9	59¼	9	43	2
1-G-11	11	10	59	10	47	2

Note: All dimensions are in Inches.
For data on trimmings see page 7.

21006

STANDARD GAS BOILERS

MEASUREMENTS, DATA AND TAPPINGS

TYPE 4-G (STEAM OR WATER BOILER)

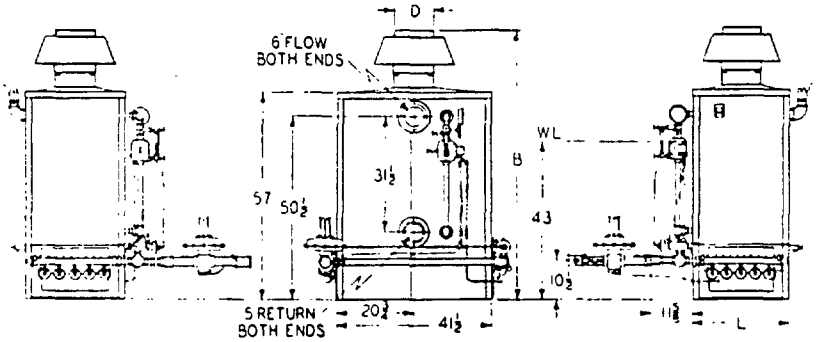

6 to 11 Sections (Single Unit Illustrated)

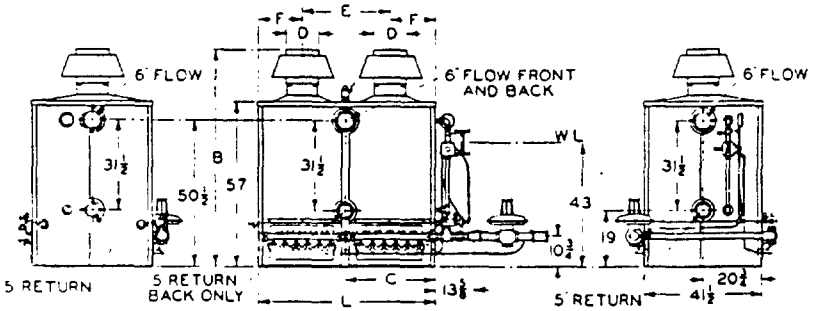

13 to 41 Sections (Double Unit Illustrated)

Boiler No.	No. of Sections	No. of Burners	B	C	D (Diam. Flue)	E	F	L	Gas Conn.
4-G-6	6	10	74	....	11	....	....	27	2
4-G-7	7	12	75	....	12	....	....	31	2
4-G-8	8	14	77	....	13	....	....	35	2
4-G-9	9	16	77¾	....	14	....	....	39	2
4-G-10	10	18	79½	....	15	....	....	43	2½
4-G-11	11	20	80	....	16	....	....	47	2½
4-G-13	13	24	75	30⅝	2-12	30¼	15½	61¼	2½
4-G-15	15	28	77	34⅝	2-13	34¼	17½	69¼	2½
4-G-17	17	32	77¾	38⅝	2-14	38¼	19½	77¼	2½
4-G-19	19	36	79½	42⅝	2-15	42¼	21½	85¼	3
4-G-21	21	40	80	46⅝	2-16	46¼	23½	93¼	3
4-G-22	22	42	77	34⅝	3-13	34¼	17½	103½	2-2½
4-G-25	25	48	77¾	38⅝	3-14	38¼	19½	115½	2-2½
4-G-28	28	54	79½	42⅝	3-15	42¼	21½	127½	2-2½
4-G-31	31	60	80	46⅝	3-16	46¼	23½	139½	2-2½
4-G-33	33	64	77¾	38⅝	4-14	38¼	19½	153¾	2-3
4-G-37	37	72	79½	42⅝	4-15	42¼	21½	169¾	2-3
4-G-41	41	80	80	46⅝	4-16	46¼	23½	185¾	2-3

Note: All dimensions are in Inches.
Note: Types 4-G-13 to 4-G-21 have 4-6"; Types 4-G-22 to 4-G-31 have 6-6"; and Types 4-G-33 to 4-G-41 have 8-6" Flow Tappings.
For data on trimmings see page 7.
For "Layout of Tappings" see next page.

21007

STANDARD GAS BOILER

TYPE 4-G (STEAM AND WATER)
LAYOUT OF TAPPINGS

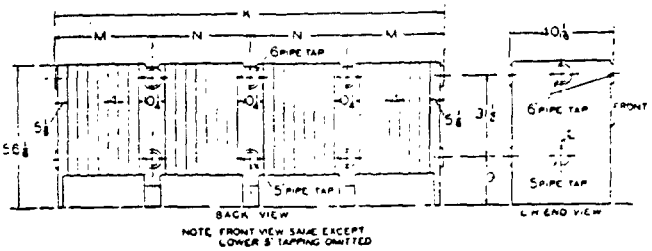

A typical section assembly is illustrated at the left and shows locations of flow and return tappings. Boiler illustrated is a 4-G-33.

"M" or "N" is same as dimension "E" in table, page 41.
"K" is 3/4" less than dimension "L" in table, page 41.

EMPIRE AND STANDARD GAS BOILERS

FLUE RECOMMENDATIONS

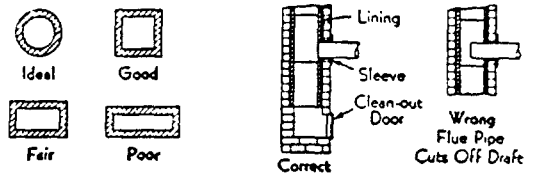

Flue Shapes

Flue Connections

CHIMNEY SIZES

Boiler Number	Chimney Height in Feet *10	20	40	80	Boiler Number	Chimney Height in Feet *10	20	40	80	Boiler Number	Chimney Height in Feet *10	20	40	80
	Diameter Inches					Diameter Inches					Diameter Inches			
1-GA-4	4	4	4		1-G-8	8	8	8	8	4-G-33	22	20	19	19
1-GA-5	4	4	4		1-G-9	9	8	8	8	4-G-37	24	22	20	20
1-GA-6	4	4	4		1-G-10	9	9	8	8	4-G-41	24	24	22	20
					1-G-11	9	9	9	8					
2-GA-4	5	5	4							2 BOILERS				
2-GA-5	5	5	5		4-G-6	10	9	9	9					
2-GA-6	6	6	5		4-G-7	11	10	10	9	4-G-22	26	24	22	22
2-GA-7	6	6	6		4-G-8	11	11	10	10	4-G-25	26	26	24	22
					4-G-9	12	11	11	10	4-G-28	28	26	26	24
4-GA-8	6	6	6							4-G-31	30	28	26	26
4-GA-9	7	6	6		4-G-10	12	12	11	11	4-G-33	30	28	28	26
4-GA-11	7	7	7		4-G-11	13	12	12	11	4-G-37	32	30	28	28
4-GA-13	8	7	7		4-G-13	14	13	13	12	4-G-41	34	32	30	28
					4-G-15	15	14	13	13					
0-GS-4E	5	5	4							3 BOILERS				
0-GS-5E	5	5	5		4-G-17	16	15	14	14					
0-GS-6E	6	6	5		4-G-19	17	16	15	14	4-G-28		32	30	30
					4-G-21	18	17	16	15	4-G-31		34	32	30
1-G-4	6	6	6		4-G-22	18	17	16	16	4-G-33		36	32	32
1-G-5	7	7	6							4-G-37		38	34	34
1-G-6	8	7	7		4-G-25	19	18	17	16	4-G-41		40	36	34
1-G-7	8	8	7		4-G-28	20	19	18	17					
					4-G-31	22	20	19	18					

*Flue sizes for 10-foot chimneys are for special installations where greater height is impossible or impracticable. Not recommended for general practice.
Heights are measured from the boiler.
If other than round flues are used the area must be the effective equivalent of the round flue.

GAS CONVERSION BURNERS

RATINGS AND DIMENSIONS

AMERICAN GAS CONVERTOR

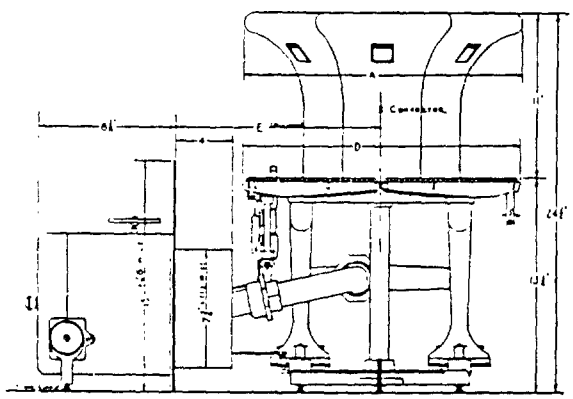

Convertor Number	A. G. A. Maximum Input Btu Rating Per Hour	Installed Radiation Sq. Ft.		**Warm Air Output at Bonnet Btu Per Hour	Length of Baffles Inches	Size Control Valve, Governor Inches	A	D	L*
		Steam	Water						
13 A	150,000	300	480	115,000	11	1	13	13	11
15 A	180,000	370	590	135,000	11	1	15	15	12
19 A	240,000	500	800	180,000	11	1¼	19	19	14
23 A	360,000	750	1,200	270,000	11	1½	23	23	15

*This is minimum distance as furnished. The distance can be adjusted by slip joint and can be further increased by changing a pipe nipple.
**For Winter Air Conditioners. For gravity furnaces reduce outputs 6%.

REDFLASH GAS CONVERTOR

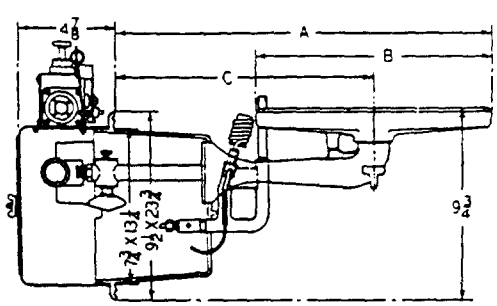

Redflash Boiler Number	Type	A. G. A. Maximum Input Rating Btu per Hr.	Installed Radiation Sq. Ft.	Redflash Convertor Number	Dimension Inches			Size Inches		
					A	B	C	Control Valve	Gas Gov.	Flue Connection
1-S-5	Steam	116,800	235	1-RS-5	15¾	8⅝	11½	1	1	5
1-W-5	Water		375	1-RW-5						
1-S-6	Steam	134,400	270	1-RS-6	18¾	11¾	13	1	1	6
1-W-6	Water		430	1-RW-6						
1-S-7	Steam	160,000	320	1-RS-7	18¾	11¾	13	1	1	6
1-W-7	Water		510	1-RW-7						
1-S-8	Steam	177,600	360	1-RS-8	21¾	14¾	14½	1	1	6
1-W-8	Water		575	1-RW-8						
1-S-9	Steam	203,200	415	1-RS-9	21¾	14¾	14½	1¼	1¼	7
1-W-9	Water		665	1-RW-9						
1-S-10	Steam	220,800	470	1-RS-10	24¾	17¾	16	1¼	1¼	7
1-W-10	Water		750	1-RW-10						
1-S-11	Steam	246,400	510	1-RS-11	24¾	17¾	16	1¼	1¼	7
1-W-11	Water		815	1-RW-11						

Complies with National Safety requirements approved by American Gas Association.

Note: Ratings shown are for sea level. Ratings should be reduced at the rate of 5% for each 1000 feet above sea level.

21009

ARCOFLAME OIL BURNERS

SPECIFICATIONS

Models "C," "CF," "M," "MF-A," "L" and "LF-E" Arcoflame Oil Burner Specifications

Current Characteristics	Gallons Oil Per Hour		Installed Radiation Sq. Ft.		Motor		
	Minimum	Maximum**	Steam	Water	hp	Watts	rpm
Models "C" and "CF"							
*60 cycle 115 V	1	3.0	800	1,300	1/4	130	1,750
25 cycle 115 V	1	2.5	650	1,050	1/4	130	1,450
50 cycle 115 V	1	2.5	650	1,050	1/4	130	1,450
D.C. 115 V	1	3.0	800	1,300	1/6	†180	1,750
Models "M" and "MF-A"							
*60 cycle 115 V	1	1.65	425	675	1/4	130	1,750
Models "L" and "LF-E"							
*60 cycle 115 V	3	7.0	2,000	3,200	1/6	190	1,750
25 cycle 115 V	3	5.5	1,550	2,500	1/6	190	1,450
50 cycle 115 V	3	5.5	1,550	2,500	1/6	190	1,450

*Standard. †When the transformer is switched off the generator, the wattage of the motor will be lower
**These capacities can be used up to 1,000 feet altitude. Reduce capacities by 6% for each additional 1,000 feet.

GENERAL INFORMATION

Method of Fuel Atomization — Mechanical Pressure — 100 Pounds

Air Supply — Low pressure with squirrel cage fan.

Ignition — Intermittent spark for Models "C," "CF," "L" and "LF-E." Constant spark for Models "M" and "MF-A."

Approval — All Arcoflame Oil Burners (60 cycle 115V) are listed by the Underwriter's Laboratories, Inc., for No. 1, No. 2 and No. 3 fuel oil, comply with Commercial Standard CS-75, and are approved by the New York City Board of Standards and Appeals and by the State Fire Marshal of the Commonwealth of Massachusetts.

Types — Models "C-1," "C-2," "C-3," "L-1" and "L-3" are pedestal mounted and are used for conversion installations.

Models "C-1" and "L-1" have short draft tubes.

Model "C-2" has a medium length draft tube.

Models "C-3" and "L-3" have extra long draft tubes.

Model "CF-7" is flange mounted and is furnished only with Severn Oil Heating Units and No. 156 Arcoliner (Wet Base) Oil Heating Unit.

Model "CF-112" is flange mounted and is furnished only with Oakmont Oil Heating Units.

Model "LF-E" is flange mounted and is furnished only with Exbrook Oil Heating Units.

Model "M" is pedestal mounted and is furnished only for use with Nos. 153, 154 and 155 Arcoliner (Dry Base) Boilers.

Model "MF-A" is flange mounted and is furnished only with Nos. 153, 154 and 155 Arcoliner (Wet Base) Oil Heating Units

CONTROLS

Arcoflame Oil Burners are sold only in combination with one of the standard Arcoflame Control Sets available as listed in Trade Price Book. The room thermostat and other controls are manufactured by and for American Radiator & Standard Sanitary Corporation and are included with every Arcoflame Burner. They enjoy a high reputation for the skillful design and precision-manufacture that assure accurate performance.

ARCOFLAME OIL BURNERS

DIMENSIONS AND DATA

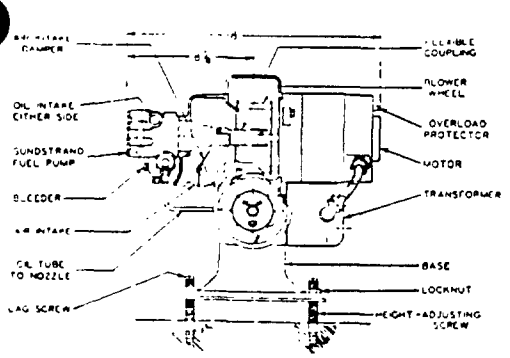

Model C — Front View
Conversion Burner

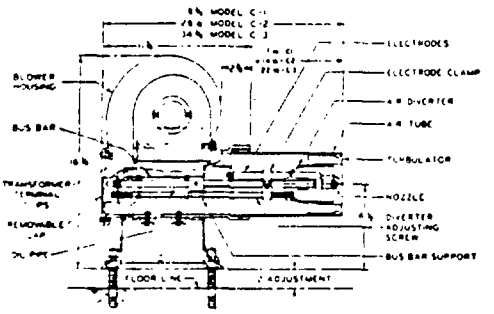

Model C — Side View
Conversion Burner with Fuel Unit Removed

Diameter of Air Tube 5 Inches

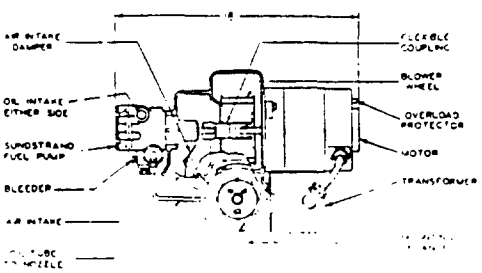

Model CF — Front View
Flange Type

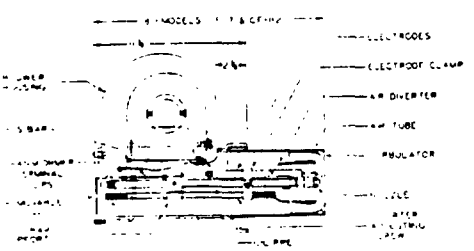

Model CF — Side View
Flange Type with Fuel Unit Removed

Diameter of Air Tube 5 Inches

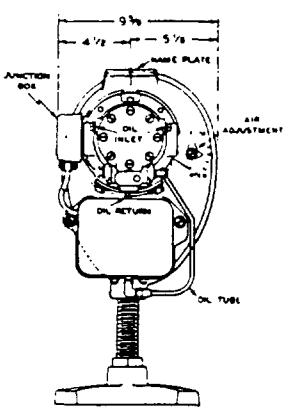

Model M — Rear View
Pedestal Type

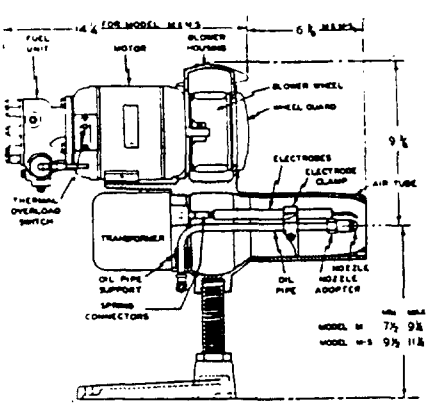

Model M — Side View
Pedestal Type

Diameter of Air Tube 3½ Inches

21011

ARCOFLAME OIL BURNERS

DIMENSIONS AND DATA (Continued)

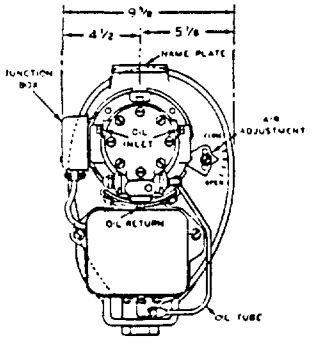

Model MF-A — Rear View
Flange Type

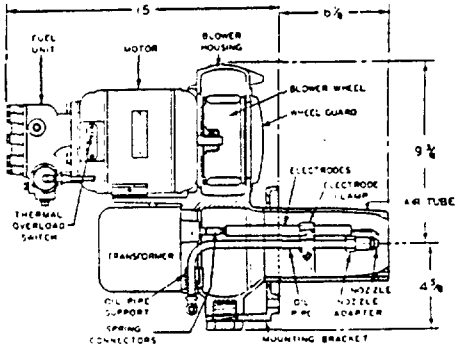

Model MF-A — Side View
Flange Type

Diameter of Air Tube 3 1/4"

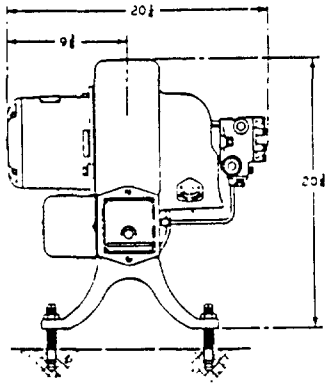

Model L — Rear View
Conversion Burner

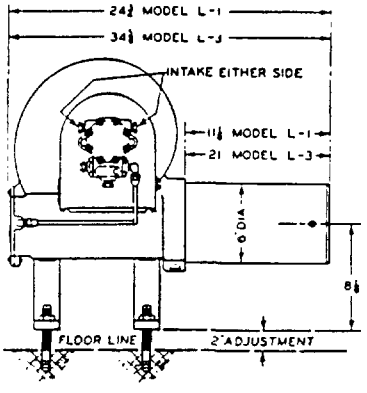

Model L — Side View
Conversion Burner

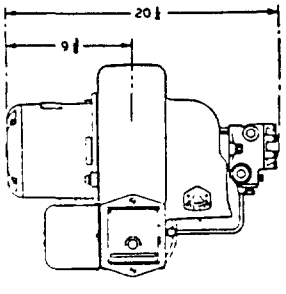

Model LF-E — Rear View
Flange Type

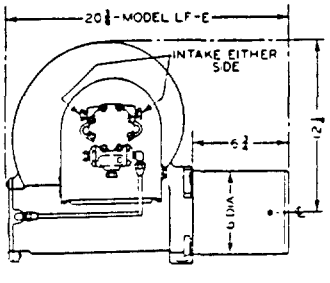

Model LF-E — Side View
Flange Type

ARCOFLAME OIL BURNERS

APPLICATION OF TURBULATOR ATTACHMENT

Used for 1.35 Gallons and Smaller Nozzles

Models C and CF

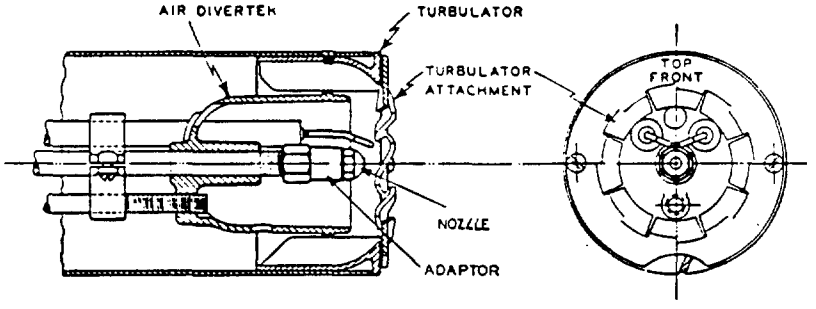

AIR DIVERTER AND ELECTRODE SETTING

Models C and CF

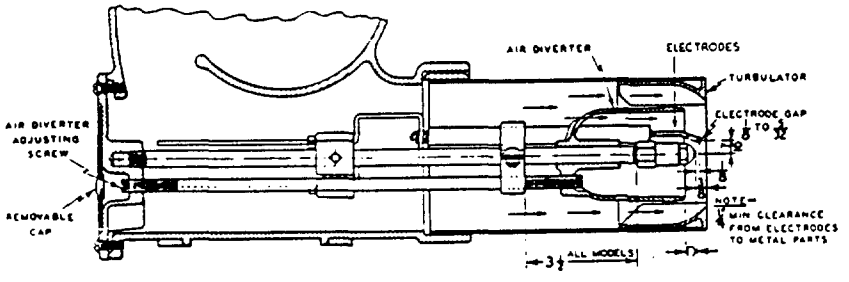

Size of Nozzle Gals. Per Hr.	1.25	1.35	1.50	1.65	1.75	2.00	2.25	2.50	2.75	3.00
Spray Angle Degree	80°	80°	80°	80°	60°	60°	60°	60°	60°	60°
Dimension "D" Ins.	1/4	1/4	1/2	3/8	3/8	3/4	7/8	1.0	1 1/8	1 1/8

"D" is distance from Diverter to Nozzle Tip.

Models L and LF-E

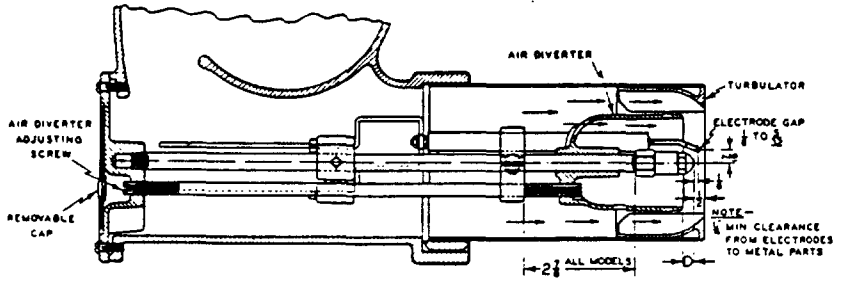

Size of Nozzle Gals. Per Hr.	3.00	3.50	4.00	4.50	5.00	5.50	6.00	6.50	7.00
Spray Angle Degrees	60°	60°	60°	60°	60°	60°	60°	60°	60°
Dimension "D" Ins.	0	0	1/4	1/4	1/4	1/4	1/4	1/2	1/2

"D" is distance from Divert[illegible]ozzle Tip.

21013

ARCOFLAME OIL BURNERS

ELECTRODE SETTING

Models M and MF-A

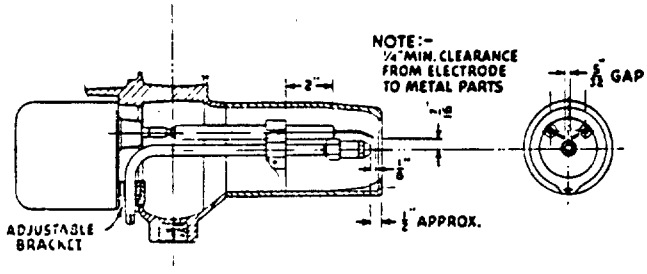

SELECTING THE PROPER SIZE NOZZLE FOR THE BURNER

Boiler and furnace efficiencies range from 50% to 80%. The latter is used with some boilers and furnaces designed for oil burning.

CONVERSION BOILERS are coal burning boilers converted to oil.

For rapid calculation:

		OIL BURNING BOILERS	CONVERSION BOILERS
For Steam (240 Btu)	Nozzle Size (G.P.H.) =	*Installed Radiation / 250	*Installed Radiation / 200
For Water (150 Btu)	Nozzle Size (G.P.H.) =	*Installed Radiation / 400	*Installed Radiation / 300
For Warm Air Forced Circulation	Nozzle Size (G.P.H.) =	Btu Register Cap. x 1.2 / 100,000	
For Warm Air Gravity Circulation	Nozzle Size (G.P.H.) =	Btu Register Cap. x 1.4 / 100,000	

Referring to the foregoing example, the nozzle size for 500 sq. ft. steam Installed Radiation on an oil burning boiler would be

$$500 \div 250 = 2.00 \text{ G.P.H.}$$

Therefore, a 2.00 gallon nozzle would be used.

Similarly, the same load on a coal fired boiler would require a nozzle, $500 \div 200 = 2.5$ G.P.H.

***The Net installed radiation, square feet, plus the equivalent load of the domestic hot water or other appliances connected to the boiler, equals the INSTALLED RADIATION.**

ARCOFLAME OIL BURNERS

HEAT LIB-O-RATOR MOLDED REFRACTORY COMBUSTION CHAMBERS are designed for and can be used with Models "C," "CF," "LF-E," "M" and "MF-V" Burners and fit the following Boilers:

Heat Lib-O-rator No.	Maximum Firing Rate Gals. per Hr.	Arcoliner (Wet Base)	Arcoliner (Dry Base)	Severn	Oakmont	Exbrook
00	1.50				84	
1	1.75			17, 21	85	
2	2.25			25, 29	86	
3	3.00			33, 37	87, 88, 89	
4	1.35	153, 154	153, 154			
5	1.65	155	155			
6	2.00	156	156			
7	4.50					207, 208, 202
8	6.50					2010, 2011, 2019

HIGH TEMPERATURE STEEL HEAT LIB-O-RATOR COMBUSTION CHAMBERS are furnish assembled in Nos. 153, 154 and 155 Arcoliner (Wet Base) Arcoflame Oil Heating Units.

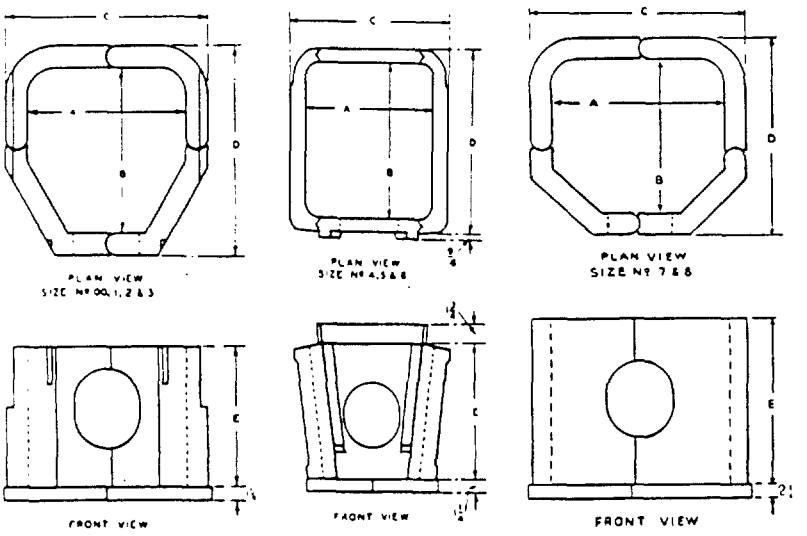

Width of front opening: Nos. 00, 1, 2, 3 - 6 in.; Nos. 4, 5, 6 - 5½ in.; Nos. 7 and 8 - 7 in.

Size No.	DIMENSIONS A	B	C	D	E
00	13	11½	17	15½	12¾
1	14½	13	18½	17	12¾
2	14½	15	18½	19	12¾
3	14½	17	18½	21	12¾
4	11⅞	9¾	14⅞	11⅞	12¼
5	11⅞	12	14⅞	14½	12¼
6	11⅞	14	14⅞	16½	12¼
7	18	16	22	20	17
8	20	20	24	24	17

21015

ARCOFLAME OIL BURNERS

COMBUSTION CHAMBER DIMENSIONS (Made from Firebrick)

DIMENSIONS OF COMBUSTION CHAMBERS FOR ARCOFLAME OIL BURNER

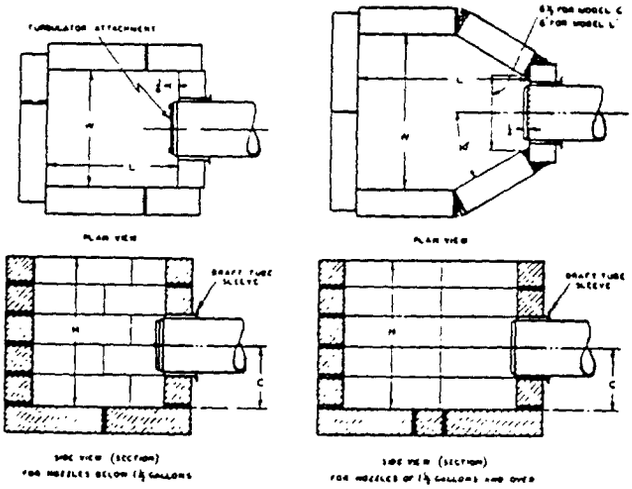

Fig. 1

Fig. 2

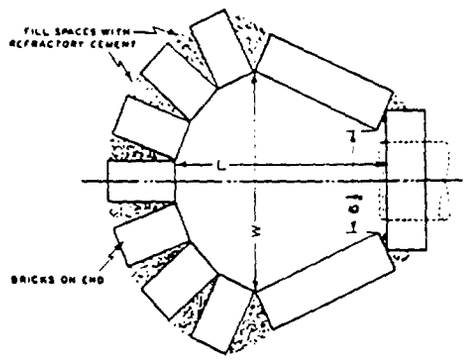

Round Boiler Combustion Chamber
Fig. 3

Burner Model	Nozzle Size G.P.H.	Spray Angle	Combustion Chamber Size — Inches "L"	"W"	*"H"	Floor of C.C. to C.L. of Nozzle "C"	Min. Wall Thickness Ins.	Burner Model	Nozzle Size G.P.H.	Spray Angle	Combustion Chamber Size — Inches "L"	"W"	*"H"	Floor of C.C. to C.L. of Nozzle "C"	Min. Wall Thickness Ins.
C	1.00***	80°	12	10½	13½	5-5½	2½	L	3.00	60°	16	18	18	8	4
C	1.25**	80°	12	10½	13½	5-5½	2½	L	3.50	60°	16	18	18	8	4
C	1.35**	80°	12	10½	13½	5-5½	2½	L	4.00	60°	18	18	18	8	4½
C	1.50	80°	13	14	13½	6-7	2½	L	4.50	60°	20	20	19	9	4½
C	1.65	80°	13	14	13½	6-7	2½	L	5.00	60°	20	22	20	10	4½
C	1.75	60°	14	14	13½	6-7	2½	L	5.50	60°	22	22	20	10	4½
C	2.00	60°	15	15	13½	7	2½	L	6.00	60°	22	22	20	10	4½
C	2.25	60°	15	15	13½	7	2½	L	6.50	60°	24	22	20	11	4½
C	2.50	60°	16	15	13½	7	2½	L	7.00	60°	24	24	22	11	4½
C	2.75	60°	18	15	13½	7-8	2½								
C	3.00	60°	18	15	13½	7-8	2½								

*The height of combustion chamber "H" is a minimum. The firebrick should always be carried high enough to cover 2 inches of water backed surfaces.

**For nozzle sizes below 1.50 gallons per hour, build chamber rectangular; see Fig. 1.
For nozzle sizes of 1.50 gallons per hour or larger, build chamber as shown in Fig. 2.

***Use 1.25 gallons per hour nozzle at 80 to 90 pounds pressure.

NOTE:
For Firing Rates of 1.35 gallons per hour or less be sure to use the turbulator attachment. See page 47.
Use Nozzles with Spray Angles specified in table above.
Do not attempt to burn more oil with these burners than specified on page 44.
If width of the larger sized chambers shown in the table cannot be obtained increase length of chamber by amount of width reduced. Never reduce width by more than 3".

21016

BUDGET

GAS FIRED AUTOMATIC STORAGE WATER HEATER

(GALVANIZED STEEL TANK)

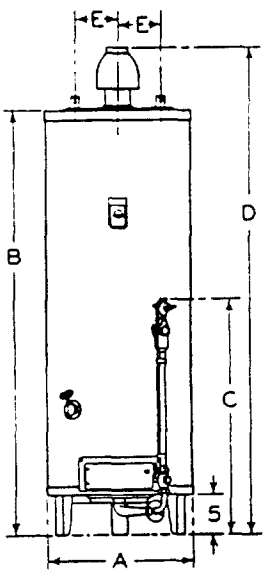

DIMENSIONS

Water Heater No.	A	B	C	D	E
154-S	15¼	43½	22½	51	4
204-S	15¼	53½	27¼	61	4
304-S	18½	51¼	28	59	5½
404-S	18½	62¼	28	70½	5½

All dimensions are in inches.

CAPACITIES

Water Heater No.	Nominal Size Gallons	Btu Input	*Recovery Gallons per Hour
154-S	15	16,000	22.4
204-S	20	20,000	28.0
304-S	30	24,000	33.6
404-S	40	30,000	42.0

*U. S. gallons raised 60°F. Recovery capacity Imperial gallons = Recovery Capacily U. S. gallons ÷ 1.2. Gas Inlet ½" I.P.S. Flue Connection 3". Size of Water Connections ¾".

21017

GAS BOILERS FOR HOT WATER SUPPLY

DIRECT TYPE AUTOMATIC HOT WATER STORAGE SYSTEM

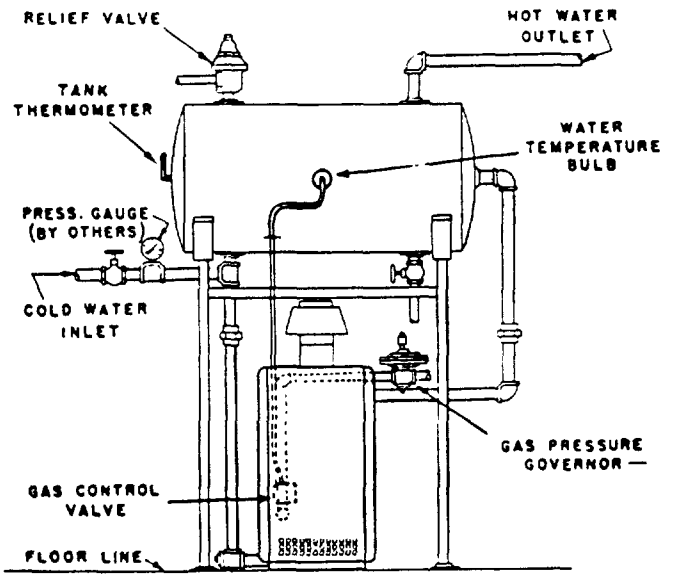

Typical Installation

EMPIRE GAS FIRED WATER BOILER WITH "DW" EQUIPMENT

Hot water supply in buildings, small or large, may be provided economically and automatically by an AMERICAN Gas Boiler in combination with a suitable storage tank. There are two such systems in general use, the Direct and the Indirect system. Above is shown a typical installation of a Direct type system (with "DW" Equipment) These boilers are tested at 200 lbs. per square inch. For ratings, see page 54. Complete data and information on hot water supply sent on request.

"DW" EQUIPMENT INCLUDES:

Gas Control Valve with Thermo-Pilot and Water Temperature Regulator (586 VW-HWS), with 15 ft. capillary tube, Closing Range 137°-195°F.
Temperature Bulb Gland (¾" Male).
Gas Pressure Governor.
Boiler Drain and Pilot Cocks.
Water Pressure Relief Valve (No. H-9067).
Tank Thermometer.
Insulated Metal Jacket.
Draft Hood.

21018

GAS BOILERS FOR HOT WATER SUPPLY

INDIRECT TYPE AUTOMATIC HOT WATER STORAGE SYSTEM

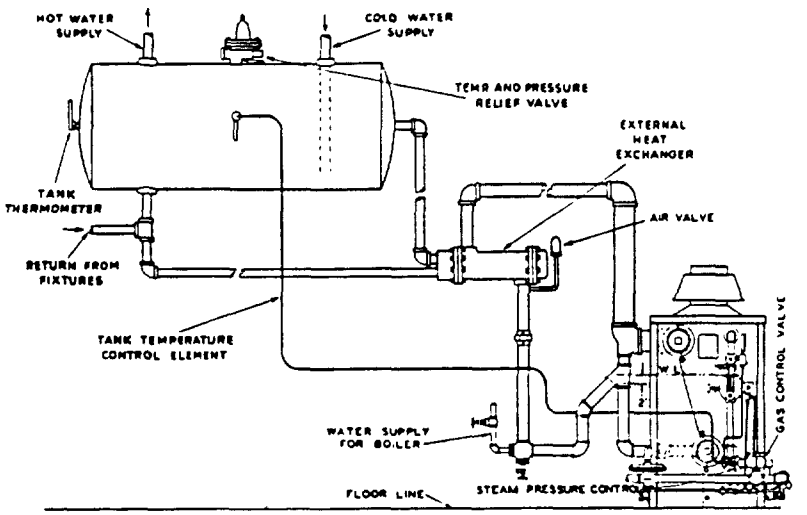

Typical Installation

STANDARD GAS FIRED STEAM BOILER WITH "IS" EQUIPMENT

In many localities it is not advisable to permit the water being heated to pass directly through the boiler. An Excelso Indirect Water Heater or other Heat Exchanger, or pipe coil in the storage tank, is therefore used to transfer the heat generated by a steam boiler, to the water in the tank. A typical installation with "IS" equipment using an AMERICAN Gas Boiler and Heat Exchanger, is shown above. For ratings, see page 54. Detailed data on automatic hot water supply sent on request.

"IS" EQUIPMENT INCLUDES:

Gas Control Valve with Thermo-Pilot, Steam Pressure Control and Tank Temperature Control, with 15 Feet of Capillary Tube, Closing Range 137°-195°F. (586 VS-HWS).
Resetting Low Water Cut-Off.
Gas Pressure Governor.
Steam Gauge.
Steam Safety Valve.
Boiler Drain and Pilot Cocks.
Temperature Bulb Gland (¾" Male).
Tank Thermometer.
Insulated Metal Jacket.
Draft Hood.

21019

GAS BOILERS FOR HOT WATER SUPPLY

RATINGS AND DATA

DIRECT TYPE AUTOMATIC HOT WATER STORAGE SYSTEMS

Standard Water Boilers with "DW" Equipment

Water Boiler Number	Rating Gallons Water per Hour			Approximate Tank Size Storage Capacity Gallons			
				3-Hour Heating Period		4-Hour Heating Period	
	60° Rise	80° Rise	100° Rise	80° Rise	100° Rise	80° Rise	100° Rise
1-GA-4	63	47	38	120	100	160	130
1-GA-5	84	63	50	160	130	210	170
1-GA-6	105	79	63	200	160	260	210
2-GA-4	126	95	76	240	190	320	250
2-GA-5	168	126	101	320	250	420	310
2-GA-6	210	158	126	400	320	530	420
2-GA-7	252	189	151	470	380	600	500
4-GA-9	336	252	202	630	510	840	670
4-GA-11	420	316	252	790	630	1050	840
4-GA-13	504	378	302	950	760	1260	1000

INDIRECT TYPE AUTOMATIC HOT WATER STORAGE SYSTEMS

Steam Boilers with "IS" Equipment

Steam Boiler Number	Rating Gallons Water per Hour			Approximate Tank Size Storage Capacity Gallons				Recommended Size of Heat Exchanger	
				3-Hour Heating Period		4-Hour Heating Period			
	60° Rise	80° Rise	100° Rise	80° Rise	100° Rise	80° Rise	100° Rise	Excelso Heater No.	Coil in Tank Sq. Ft.
0-GS-4-E	125	90	75	220	180	310	250	15	3.75
0-GS-5-E	165	125	100	300	240	410	330	25	5.00
0-GS-6-E	205	155	125	380	300	510	410	26	6.25
1-GS-4	290	220	175	550	440	730	580	27	9.00
1-GS-5	370	280	225	700	560	930	750	28	12.00
1-GS-6	450	340	270	850	680	1130	900	34	14.00
1-GS-7	530	400	320	1000	800	1330	1070	35	16.00
1-GS-8	610	460	365	1150	910	1530	1220	35	18.00
1-GS-9	690	520	415	1300	1040	1730	1380	36	21.00
1-GS-10	770	575	460	1450	1150	1920	1530	36	23.00
1-GS-11	850	635	510	1600	1300	2120	1700	37	26.00

Note: Type 4-G Boilers can also be furnished for use with Indirect Steam *Hot Water Supply Systems*. No. 653 Detroit Immersion Operating Control for use in storage tank is furnished in addition to Regular Equipment. This control operates gas valves on boiler electrically as required.

21020

HOT WATER SUPPLY BOILERS

CAPACITIES, DIMENSIONS AND TAPPINGS

IDEAL DOME TYPE WATER HEATERS

Guaranteed for Working Pressure of 125 lbs. Tested to 315 lbs. (Hydrostatic Pressure)

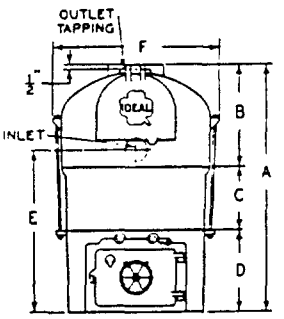

Heater No.	Nominal Capacity Gallons	Diam. of Grates Inches	Smoke Pipe Inches	Dimensions — Inches						Size Tapping Inches
				A	B	C	D	E	F	
65	65	10	5	19	8	3¼	7⅞	12	14½	1
80	80	10	5	22	8	6¼	7⅞	15	14½	1
95	95	10	5	22	11	3⅜	7⅝	12	14½	1
125	125	10	5	25	14	3⅜	7⅝	12	14½	1
150	150	10	5	28	14	6¾	7⅝	15	14½	1
210	210	12	5	25¼	10¾	6⅜	8¼	16⅜	17½	2
250	250	12	5	24¼	16	0	8¼	10	17½	2
300	300	15	6	27	17	0	10	13	18¾	2½
400	400	15	6	30½	20½	0	10	13	18¾	2½

*Capacities based on water temperature rise of 25°F. per hour.
These heaters have no base bottom. Ashpan not furnished.
Fire brick for Nos. 80, 150 and 210 at no extra charge. Fire brick for Nos. 65, 95 and 125 supplied at small extra charge. Fire brick not available for Nos. 250, 300 and 400.

IDEAL SCUTTLE-A-DAY WATER HEATERS

Guaranteed for Working Pressure of 125 lbs. Tested to 315 lbs (Hydrostatic Pressure)

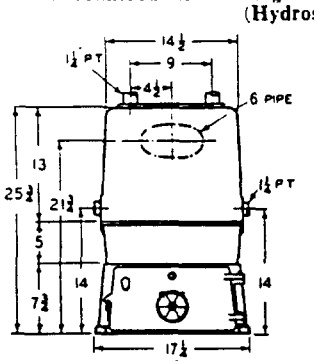

No. 175-F

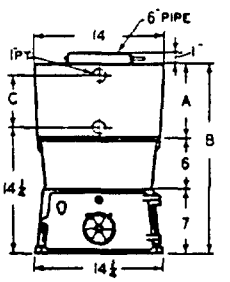

Nos. 75-F and 110-F

Heater No.	Nominal Capacity Gallons	Diam. of Grate Inches	Style of Grate	Heater No.	Dimensions — Inches		
					A	B	C
75-F	75	10	Rocking	75-F	5½	18½	3¼
110-F	110	10	Rocking	110-F	8½	21½	6¼
175-F	175	12	Rocking				

*Capacities based on water temperature rise of 25°F. per hour.
Ashpan, base plate and legs for these heaters can be furnished at small extra cost.
Fire brick furnished at no extra charge.
Note: No. 891 Arco Water Regulator (for damper control) furnished with these Heaters on order only at moderate cost.

21021

ARCO RADIATORS

DIMENSIONS

THREE-TUBE
Centers 1¾ Inches

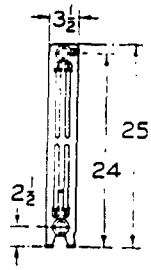

FOUR-TUBE
Centers 1¾ Inches

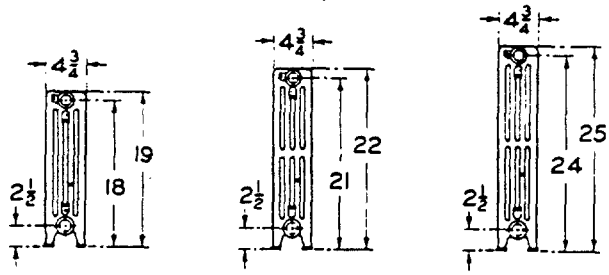

FIVE-TUBE
Centers 1¾ Inches

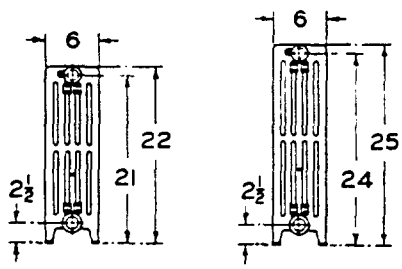

SIX-TUBE
Centers 1¾ Inches

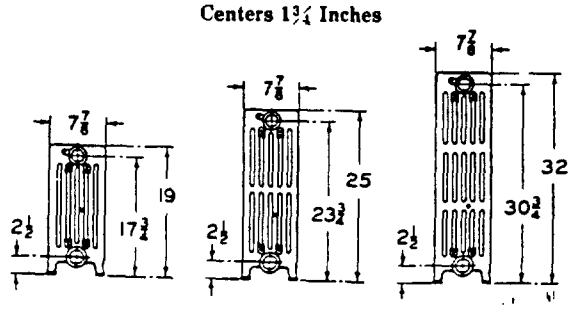

For data on Arco Radiator Brackets and Pedestals see page 90.

H

Heat E

Number of Sections
2
4
6
8
10
12
14
16
18
20
22
24
26
28
30
32
34
36
38
40
42
44
46
48
50

Heat I

Number of Sections
2
4
6
8
10
12
14
16
18
20
22
24
26
28
30
32
34
36
38
40
42
44
46
48
50

Note:
larger tha
Connec
malleable
special or
and 1" on
and 1¼"
bushed if
Note:
"Add
Note:
Various A

21022

ARCO RADIATORS

RATINGS AND DATA — STEAM (215°F.)

HEAT OUTPUT — SQUARE FEET — THREE AND FOUR TUBE

Heat Emission — Sq. Ft. — Based on 240 Btu (Steam) per Square Foot per Hour

Number of Sections	* Length 1¾ Inches Per Section	Three-Tube	Four-Tube		
		25-Inch Height 1.6 Square Feet Per Section	19-Inch Height 1.6 Square Feet Per Section	22-Inch Height 1.8 Square Feet Per Section	25-Inch Height 2.0 Square Feet Per Section
		.914 Square Feet Per Lineal Inch	.914 Square Feet Per Lineal Inch	1.029 Square Feet Per Lineal Inch	1.143 Square Feet Per Lineal Inch
2	3.5	3.2	3.2	3.6	4
4	7.0	6.4	6.4	7.2	8
6	10.5	9.6	9.6	10.8	12
8	14.0	12.8	12.8	14.4	16
10	17.5	16.0	16.0	18.0	20
12	21.0	19.2	19.2	21.6	24
14	24.5	22.4	22.4	25.2	28
16	28.0	25.6	25.6	28.8	32
18	31.5	28.8	28.8	32.4	36
20	35.0	32.0	32.0	36.0	40
22	38.5	35.2	35.2	39.6	44
24	42.0	38.4	38.4	43.2	48
26	45.5	41.6	41.6	46.8	52
28	49.0	44.8	44.8	50.4	56
30	52.5	48.0	48.0	54.0	60
32	56.0	51.2	51.2	57.6	64
34	59.5	54.4	54.4	61.2	68
36	63.0	57.6	57.6	64.8	72
38	66.5	60.8	60.8	68.4	76
40	70.0	64.0	64.0	72.0	80
42	73.5	67.2	67.2	75.6	84
44	77.0	70.4	70.4	79.2	88
46	80.5	73.6	73.6	82.8	92
48	84.0	76.8	76.8	86.4	96
50	87.5	80.0	80.0	90.0	100

HEAT OUTPUT — SQUARE FEET — FIVE AND SIX TUBE

Heat Emission — Sq. Ft. — Based on 240 Btu (Steam) per Square Foot per Hour

Number of Sections	* Length 1¾ In. Per Section	Five-Tube		Six-Tube		
		22-Inch Height 2.1 Sq. Ft. Per Section	25-Inch Height 2.4 Sq. Ft. Per Section	19-Inch Height 2.3 Sq. Ft. Per Section	25-Inch Height 3.0 Sq. Ft. Per Section	32-Inch Height 3.7 Sq. Ft. Per Section
		1.20 Sq. Ft. Per Lineal In.	1.371 Sq. Ft. Per Lineal In.	1.314 Sq. Ft. Per Lineal In.	1.714 Sq. Ft. Per Lineal In.	2.114 Sq. Ft. Per Lineal In.
2	3.5	4.2	4.8	4.6	6	7.4
4	7.0	8.4	9.6	9.2	12	14.8
6	10.5	12.6	14.4	13.8	18	22.2
8	14.0	16.8	19.2	18.4	24	29.6
10	17.5	21.0	24.0	23.0	30	37.0
12	21.0	25.2	28.8	27.6	36	44.4
14	24.5	29.4	33.6	32.2	42	51.8
16	28.0	33.6	38.4	36.8	48	59.2
18	31.5	37.8	43.2	41.4	54	66.6
20	35.0	42.0	48.0	46.0	60	74.0
22	38.5	46.2	52.8	50.6	66	81.4
24	42.0	50.4	57.6	55.2	72	88.8
26	45.5	54.6	62.4	59.8	78	96.2
28	49.0	58.8	67.2	64.4	84	103.6
30	52.5	63.0	72.0	69.0	90	111.0
32	56.0	67.2	76.8	73.6	96	118.4
34	59.5	71.4	81.6	78.2	102	125.8
36	63.0	75.6	86.4	82.8	108	133.2
38	66.5	79.8	91.2	87.4	114	140.6
40	70.0	84.0	96.0	92.0	120	148.0
42	73.5	88.2	100.8	96.6	126	155.4
44	77.0	92.4	105.6	101.2	132	162.8
46	80.5	96.6	110.4	105.8	138	170.2
48	84.0	100.8	115.2	110.4	144	177.6
50	87.5	105.0	120.0	115.0	150	185.0

Note: Arco Radiators are sold only in even number of sections up to 56 sections. For assemblages larger than 29 sections, Arco Radiators will have center leg.

Connections: Both steam and water extra heavy 1" malleable nipples on 3, 4 and 5-Tube and 1¼" malleable nipples on 6-Tube, at top and bottom. Regularly furnished with 2½" legs. Can be supplied on special order with 4½" legs, or without legs. For height of loop section only subtract 1½" on 3, 4 and 5-Tube and 1" on 6-Tube from total height as shown above. End sections regularly supplied with 1" top tappings and 1¼" bottom tappings for 3, 4 and 5-Tube, and with 1¼" top tappings, 1½" bottom tappings for 6-Tube, bushed if so specified.

Note: For threads of tappings and air valve tappings, see page 88.

*Add ½" to length for each bushing.

Note: To determine size of Arco Radiators for water heating systems see "Table of Heat Emission for Various Average Hot Water Temperatures" on page 89.

21023

SUNRAD RADIATOR

RATINGS AND DATA — STEAM (215°F.)

*Heat Emission — Sq. Ft. — Based on 240 Btu (Steam) per Square Foot per Hour

Number of Sections	Length 2 Inches Per Section **	Depth, 5 Inches Height, 20 Inches 2.0 Sq. Ft. per Section *	Depth, 7½ Inches Height, 23 Inches 3.0 Sq. Ft. per Section *
4	8	8.0	12.0
6	12	12.0	18.0
8	16	16.0	24.0
10	20	20.0	30.0
12	24	24.0	36.0
14	28	28.0	42.0
16	32	32.0	48.0
18	36	36.0	54.0
20	40	40.0	60.0
22	44	44.0	66.0
24	48	48.0	72.0
26	52	52.0	78.0
28	56	56.0	84.0
30	60	60.0	90.0
32	64	64.0	96.0
34	68	68.0	102.0
36	72	72.0	108.0
38	76	76.0	114.0
40	80	80.0	120.0
42	84	84.0	126.0
44	88	88.0	132.0
46	92	92.0	138.0
48	96	96.0	144.0
50	100	100.0	150.0

*Ratings shown are for free standing and wall hung radiation. For recessed installations, before selecting Sunrad add 5% to room radiation requirements if radiator will have ½" air space on top and sides, and ½" at back; and 15% if radiator will be tightly recessed, without any clearance on top and sides, but with ½" space at back.

**Add approximately ¼" to overall length due to slightly heavier end sections and to provide for expansion when recessed.

Note: To determine size of Sunrad Radiators for water heating systems see "Table of Heat Emissions for Various Average Hot Water Temperatures" on page 89.

Sunrad Radiators are sold only in even number of sections with assemblies up to 50 sections.

For Sunrad Radiators larger than 34 sections, a center leg will be installed one section to right of the center line of assembly.

21024

SUNRAD RADIATOR

TYPICAL RECESSED INSTALLATION FOR ONE OR TWO-PIPE SYSTEMS

For recessed installations, before selecting Sunrad, add 5% to room radiation requirements if radiator will have ¾" air space on top and sides and ½" at back; and 15% if tightly recessed, without any clearance on top and sides, but with ½" space at back.

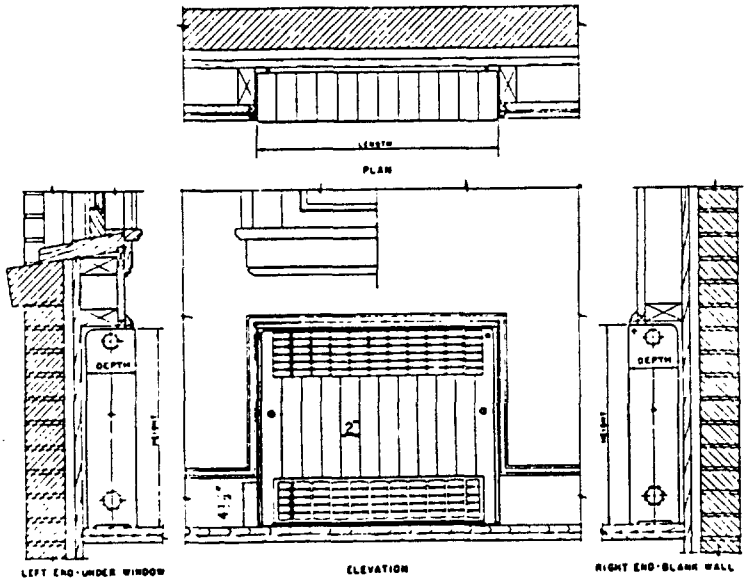

DIMENSIONS AND DATA

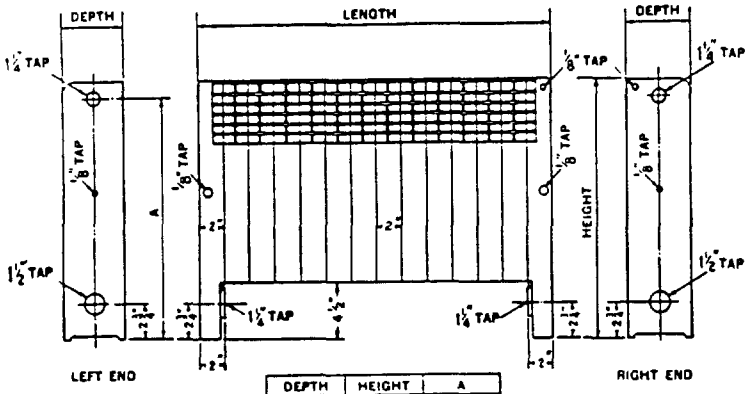

DEPTH	HEIGHT	A
5"	20"	18 1/16"
7½"	23"	21 1/16"

21025

SUNRAD RADIATOR

DIMENSIONS AND DATA

LEGLESS TYPE

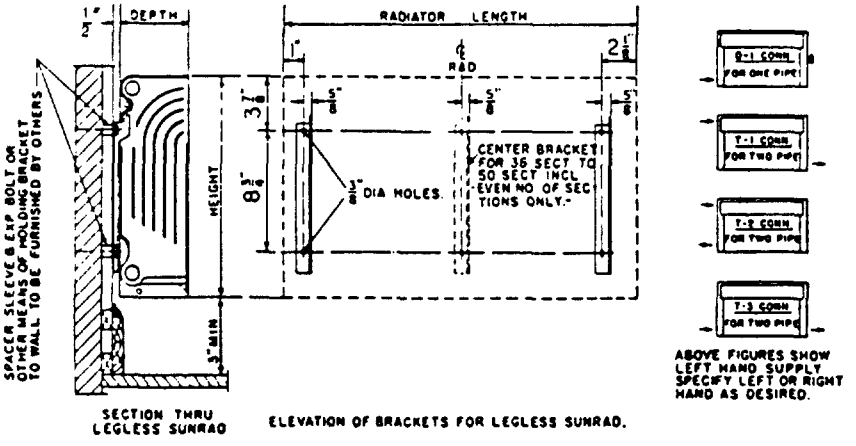

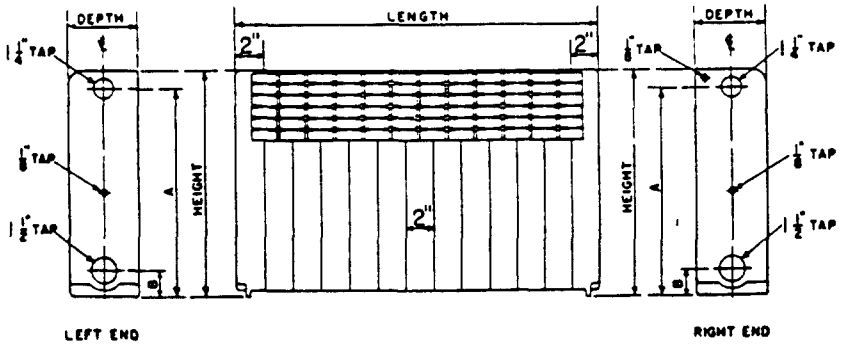

Size	Length Per Sect.	Sq. Ft. Per Sect.	Depth	Height	A	B
20 x 5	2"	2.0	5"	15⅜"	14⅜"	1¹³⁄₁₆"
23 x 7½	2"	3.0	7½"	19⅜"	17¹³⁄₁₆"	1⁷⁄₈"

For data on Sunrad Radiator Brackets see page 91.

21026

SUNRAD RADIATOR

TYPICAL CONNECTIONS

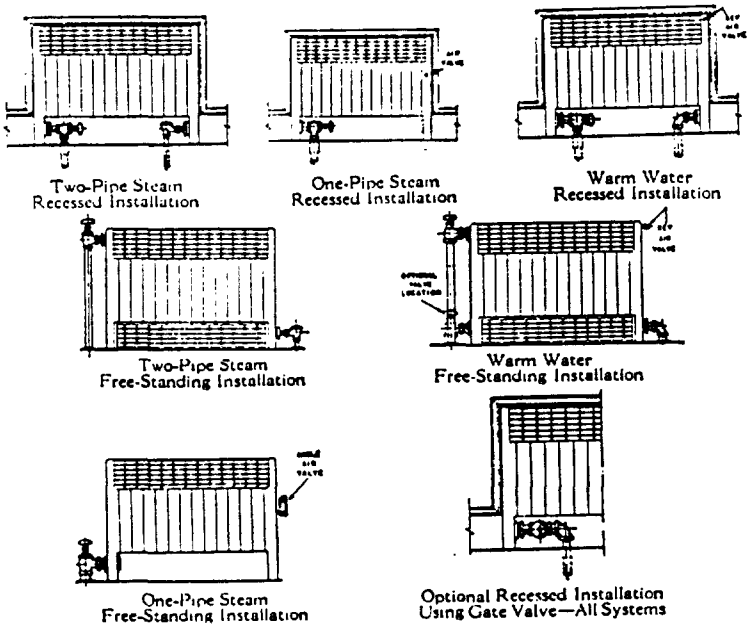

TAPPINGS

The following diagrams indicate all possible tappings for Sunrad Radiators. When ordering be sure to specify the following:

RECESSED INSTALLATIONS — Type O-4 for one-pipe steam and T-4 for two-pipe steam or water.

FREE STANDING (exposed) INSTALLATIONS — Types O-1, O-2, O-3, O-4 for one-pipe steam or T-1, T-2, T-3, T-4, T-5, or T-6 for two-pipe steam or water.

SPECIFY — Left or right hand supply for types O-1, O-2, O-3, O-4, or T-1, T-2, T-5, or T-6 connections.

EXAMPLES FOR ORDERING:

1 — 20 section 23 x 7½ Sunrad O-4
1¼" R.H.

1 — 10 section 23 x 7½ Sunrad O-1
1" L.H.

1 — 16 section 20 x 5 Sunrad T-4
1 x 1" R.H.

1 — 26 section 20 x 5 Sunrad T-1
¾ x ½" L.H.

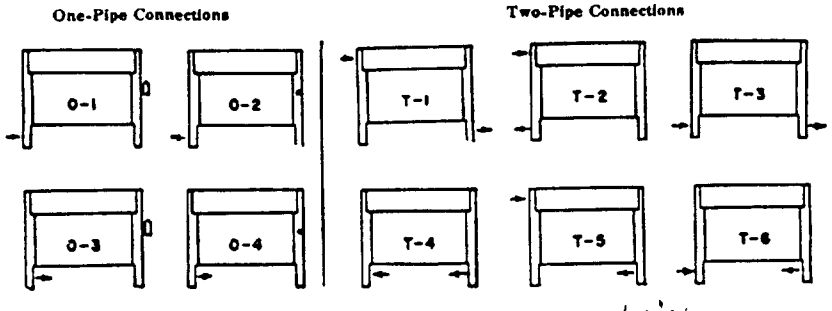

Drawings all show left-hand supply. Specify left or right as desired.

21027

BASEBOARD RADIANT PANEL

DATA AND DIMENSIONS

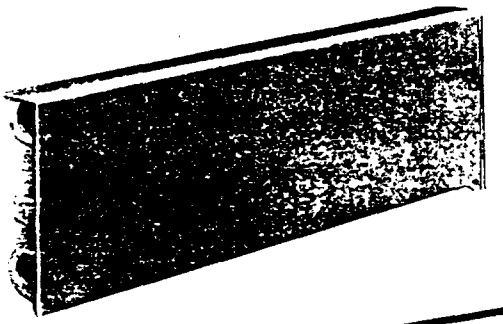

Type "R" Radiant Baseboard Panel.

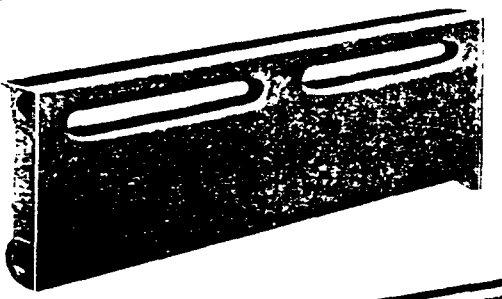

Type "RC" Radiant-Convector Baseboard Panel.

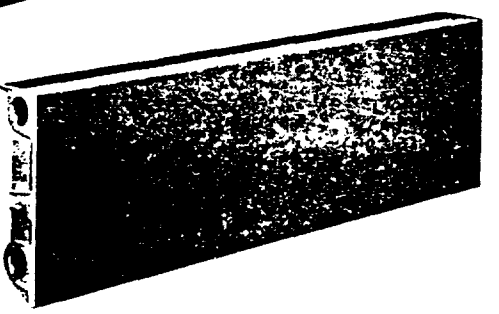

Type "R" Center Panel
Type "RC" Center Panel is similar except has Outlet Slots and finned back.

Both Type "R" and Type "RC" Panels are available in the following lengths:

24 in. — Left Hand End Panel	24 in. — Right Hand Panel
24 in. — Center Panel	12 in. — Right Hand Panel

The 12 inch Right Hand Panel is used only for odd number of lineal feet assemblages — such as 3, 5, 7, 9, 11, etc.

Tapped ¾ in. at bottom only of both End Panels.

Air Vent Tappings — ⅛ in. tappings are located on ends of End Panels and on face of Left Hand Panels.

Average Water Temp. in Panel	Heat Emission Btu/sq. ft.
215	240
200	212
195	200
190	190
180	170
170	150
160	130
150	110

BASEBOARD RADIANT PANEL

RATINGS AND DATA — FOR FORCED HOT WATER ONLY

RATINGS — BASEBOARD RADIANT PANEL — TYPE "R"

* Panel Length No. of Lineal Ft.	† Sq. Ft. per Lineal Foot 1.25	HOT WATER — BTU/HR AVERAGE WATER TEMPERATURE — °F							
		215	200	195	190	180	170	160	150
3	3.8	900	795	750	714	636	561	489	414
4	5.0	1200	1060	1000	952	848	748	652	552
5	6.3	1500	1325	1250	1190	1060	935	815	690
6	7.5	1800	1590	1500	1428	1272	1122	978	828
7	8.8	2100	1855	1750	1666	1484	1309	1141	966
8	10.0	2100	2120	2000	1904	1696	1496	1304	1104
9	11.3	2700	2385	2250	2142	1908	1683	1467	1242
10	12.5	3000	2650	2500	2380	2120	1870	1630	1380
11	13.8	3300	2915	2750	2618	2332	2057	1793	1518
12	15.0	3600	3180	3000	2856	2544	2244	1956	1656
13	16.3	3900	3445	3250	3094	2756	2431	2119	1794
14	17.5	4200	3710	3500	3332	2968	2618	2282	1932
15	18.8	4500	3975	3750	3570	3180	2805	2445	2070
16	20.0	4800	4240	4000	3808	3392	2992	2608	2208
17	21.3	5100	4505	4250	4046	3604	3179	2771	2346
18	22.5	5400	4770	4500	4284	3816	3366	2934	2484
19	23.8	5700	5035	4750	4522	4028	3553	3097	2622
20	25.0	6000	5300	5000	4760	4240	3740	3260	2760
21	26.3	6300	5565	5250	4998	4452	3927	3423	2998
22	27.5	6600	5830	5500	5236	4664	4114	3586	3036
23	28.8	6900	6095	5750	5474	4876	4301	3749	3174
24	30.0	7200	6360	6000	5712	5088	4488	3912	3312

NOTE: Ratings are shown in Btu to permit easy selection of American Baseboard Radiant Panels. Where the heat loss of a room is 5000 Btu and an average hot water temperature of 200°F is to be maintained, select 19 lineal feet of Type "R" Radiant Panel. If the average hot water temperature is to be 180°F, 24 lineal feet of Type "R" Radiant Panel will be required.

RATINGS — BASEBOARD RADIANT PANEL — CONVECTOR TYPE "RC"

* Panel Length No. of Lineal Ft.	† Sq. Ft. per Lineal Foot 2.08	HOT WATER — BTU/HR AVERAGE WATER TEMPERATURE — °F							
		215	200	195	190	180	170	160	150
3	6.3	1500	1320	1248	1191	1059	936	813	690
4	8.3	2000	1760	1664	1588	1412	1248	1084	920
5	10.4	2500	2200	2080	1985	1765	1560	1355	1150
6	12.5	3000	2640	2496	2382	2118	1872	1626	1380
7	14.6	3500	3080	2912	2779	2471	2184	1897	1610
8	16.7	4000	3520	3328	3176	2824	2496	2168	1840
9	18.8	4500	3960	3744	3573	3177	2808	2439	2070
10	20.8	5000	4400	4160	3970	3530	3120	2710	2300
11	22.9	5500	4840	4576	4367	3883	3432	2981	2530
12	25.0	6000	5280	4992	4764	4236	3744	3252	2760
13	27.1	6500	5720	5408	5161	4589	4056	3523	2990
14	29.2	7000	6160	5824	5558	4942	4368	3794	3220
15	31.3	7500	6600	6240	5955	5295	4680	4065	3450
16	33.3	8000	7040	6656	6352	5648	4992	4336	3680
17	35.4	8500	7480	7072	6749	6001	5304	4607	3910
18	37.5	9000	7920	7488	7146	6354	5616	4878	4140
19	39.6	9500	8360	7904	7543	6707	5928	5149	4370
20	41.7	10000	8800	8320	7940	7060	6240	5420	4600
21	43.8	10500	9240	8736	8337	7413	6552	5691	4830
22	45.8	11000	9680	9152	8734	7766	6864	5962	5060
23	47.9	11500	10120	9568	9131	8119	7176	6233	5290
24	50.0	12000	10560	9984	9528	8472	7488	6504	5520

NOTE: Ratings are shown in Btu to permit easy selection of American Baseboard Radiant Convector Panels. Where the heat loss of a room is 5200 Btu and an average hot water temperature of 200°F. is to be maintained, select 12 lineal feet of Type "RC" Radiant Panel. If the average hot water temperature is to be 180°F. 15 lineal feet of Type "RC" Radiant Panel will be required.

*Add ½ in. to length for each bushing.

†These ratings are based on 240 Btu emission per square foot per hour for Average Hot Water Temperature of 215°F.

Add 5½ in. to length for each Valve Enclosure.

21029

BASEBOARD RADIANT PANEL

DIMENSIONS AND DATA

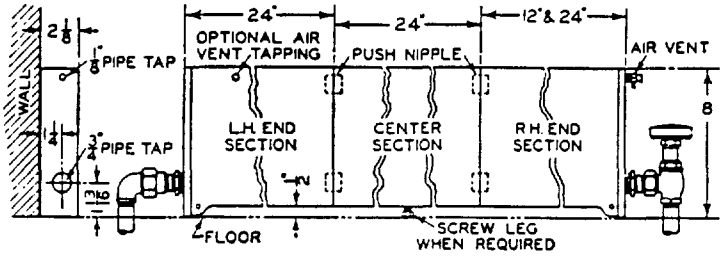

FRONT VIEW-RADIANT SECTION-TYPE "R"

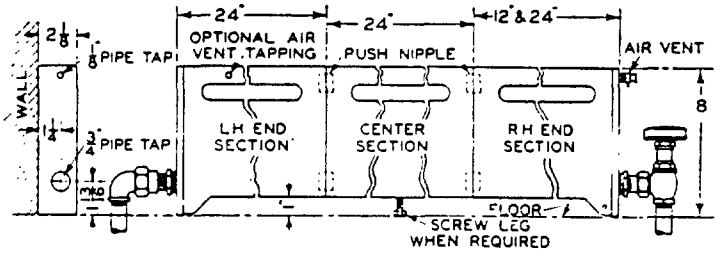

FRONT VIEW-CONVECTOR SECTION-TYPE "RC"

ACCESSORIES

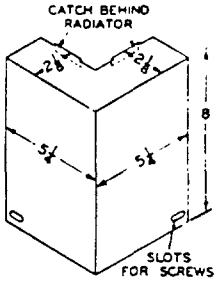

PROJECTING CORNER COVER PIECE

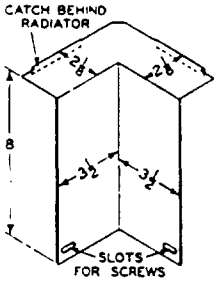

INVERTED CORNER COVER PIECE

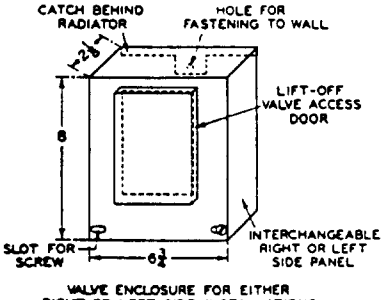

VALVE ENCLOSURE FOR EITHER RIGHT OR LEFT SIDE INSTALLATIONS

For installation procedure, additional dimensions, data and ordering instructions, see Installation Guide — Form No. 686.

21030

ARCO CAST IRON CONVECTOR

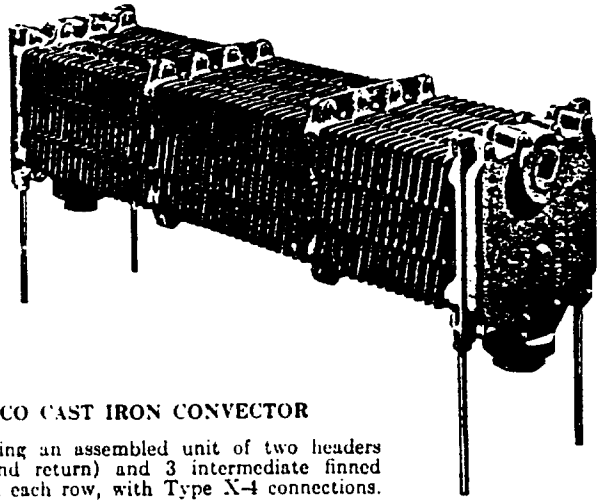

ARCO CAST IRON CONVECTOR

Illustrating an assembled unit of two headers (supply and return) and 3 intermediate finned sections in each row, with Type X-4 connections.

The Arco Convector is a cast iron heating unit for installation in appropriate enclosures, and may be recessed, semi-recessed, free-standing or hung on a wall. It is equally well adapted for steam, vapor or hot water systems. It is scientifically engineered and dependably rated by our Research Laboratory, and provides a continuous flow of warmed air, resulting in quick and economical heating.

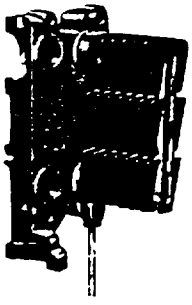

Cutaway View Header and Intermediate Section

In view of their cast iron construction Arco Convectors possess a long "carry-over" output, a distinct advantage with intermittent, automatic firing.

MEET ANY REQUIREMENT

Each Convector unit consists of a supply and return header and the required intermediate finned sections. The Convectors come in four widths, 3¾", 5⅜", 7⅜" and 9½", as shown, and the intermediate sections are made in two lengths — 7½" and 10". The headers each occupy 1½" in length of Convector. One or more of either length section, assembled with headers, provide units in lengths ranging from 13" upwards, in 2½" increments (except 15½"). All lengths are listed in the ratings chart.

The finned sections and headers are joined by ¾" malleable slip nipples and individual tie bolts at each nipple port. All contacting surfaces are machine-ground. This construction provides an exceptionally sturdy unit — able to withstand the strain and abuse of handling often met with before final installation.

UNRESTRICTED CIRCULATION

The finned sections have ample cored or internal space to insure unhampered circulation of steam or hot water, as well as proper air elimination at varying steam pressures. The fins are cast integrally with cored sections and are spaced to allow a steady and continuous flow of heated air throughout the entire surface.

Each header (supply and return) is reversible and therefore top, bottom and side tappings may be obtained. This variety of tappings gives a wide choice of piping connections and simplifies the installation. In some cases it also eliminates costly piping arrangements which require space not always available within the wall recess.

When installed with AMERICAN Enclosures, the Arco Cast Iron Convector combines high heating efficiency with attractive appearance.

FOR ILLUSTRATIONS of four widths available, also ordering instructions, see next page.

21031

ARCO CAST IRON CONVECTOR

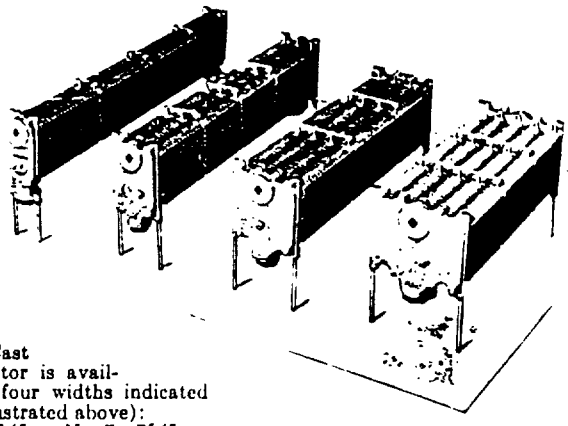

The Arco Cast Iron Convector is available in the four widths indicated below (as illustrated above):

No. 3—3¼" No. 7—7⅝"
No. 5—5⅜" No. 9—9½"

ORDERING INSTRUCTIONS

1. In ordering Arco Cast Iron Convectors, specify them by name; also indicate unit number, type of connections and tapping sizes. All tappings not used will be plugged.
2. In ordering AMERICAN Enclosures specify type of enclosure, unit number and rating of Convector; enclosure height; type of grille and inlet; type and figure number of connection (from "Standard Connections for Convectors," page 75.)

TAPPINGS AND MISCELLANEOUS

No. 3, No. 5 and No. 7 Convector Units are tapped 1¼", and the No. 9 Unit is tapped 1½". The wide variety of piping connections provided permits simple installation of Convectors in limited space.

Steel legs are furnished to support the Convectors. They are screwed into tappings in bottom of each header and permit slight adjustment in setting. Types "W" and "SW" are supported on brackets welded to enclosure; therefore no legs are furnished.

Unless otherwise specified all Convector Units will be shipped with legs that bring the bottom of fins on sections 6½ inches from floor.

TOP OUTLET RATINGS

ARCO CAST IRON CONVECTORS

Steam and hot water ratings of Convectors are based on installation with front outlet grille enclosures. Where top outlet grilles are used in enclosures, outputs may be increased as shown below, for following enclosure heights only.

Type "W" Enclosure Height	Enclosure Height Except Type "W"	Multiply Ratings By
14	18	1.15
16	20	1.10
20	24	1.04
22	26	1.02

No increase beyond 26" Enclosure heights of standard Enclosures, or 22" Enclosure heights for Type "W" Enclosure.

Note: For "Table of Heat Emission for Various Average Hot Water Temperatures" see page 89.

ARCO CAST IRON CONVECTOR

RATINGS — STEAM (215°F.)

STEAM OR WATER RATINGS

*HEAT EMISSION — SQUARE FEET
No. 3 — 3¾" Wide

Type "W" Enc. Hgt. Enclosure Height Except Type "W"	"L" Length Inches	13	18	20½	23	25½	28	30½	33	35½	38	40½	43	45½	48	50½	53	55½	58	60½
	Unit No.	313	318	320	323	325	328	330	333	335	338	340	343	345	348	350	353	355	358	360
14	18	6.0	8.4	9.7	10.9	12.1	13.3	14.6	15.8	17.0	18.2	19.4	20.6	21.8	23.1	24.3	25.5	26.7	28.0	29.2
16	20	6.5	9.1	10.5	11.8	13.1	14.4	15.7	17.1	18.4	19.7	21.0	22.3	23.6	25.0	26.3	27.6	28.9	30.3	31.6
20	24	7.5	10.6	12.0	13.5	15.0	16.5	18.1	19.7	21.1	22.7	24.2	25.7	27.2	28.7	30.2	31.8	33.3	34.8	36.3
22	26	7.8	11.0	12.6	14.2	15.8	17.4	18.0	20.6	22.2	23.8	25.3	26.9	28.5	30.1	31.7	33.3	34.9	36.5	38.1
28	32	8.4	11.8	13.5	15.2	16.9	18.6	20.4	22.1	23.8	25.5	27.2	28.9	30.6	32.3	34.0	35.7	37.4	39.1	40.8
34	38	8.8	12.3	14.1	15.9	17.6	19.4	21.2	23.0	24.7	26.5	28.3	30.1	31.8	33.6	35.4	37.2	38.9	40.7	42.5

Type "W" Enc. Hgt. Enclosure Height Except Type "W"	"L" Length Inches	63	65½	68	70½	73	75½	78	80½	83	85½	88	90½	93	95½	98	100½
	Unit No.	363	365	368	370	373	375	378	380	383	385	388	390	393	395	398	3100
14	18	30.5	31.7	33.0	34.2	35.5	36.7	38.0	39.2	40.5	41.7	43.0	44.2	45.5	46.7	48.0	49.2
16	20	33.0	34.3	35.7	37.0	38.4	39.7	41.1	42.4	43.8	45.1	46.5	47.8	49.2	50.5	51.9	53.2
20	24	37.9	39.4	41.0	42.5	44.1	45.6	47.2	48.7	50.3	51.8	53.4	54.9	56.5	58.0	59.6	61.1
22	26	39.7	41.3	42.8	44.5	46.1	47.7	49.3	50.9	52.5	54.1	55.7	57.3	58.9	60.5	62.1	63.7
28	32	42.5	44.2	45.9	47.6	49.3	51.0	52.7	54.4	56.1	57.8	59.5	61.2	62.9	64.5	66.3	68.0
34	38	44.3	46.1	47.9	49.7	51.5	53.3	55.1	56.9	58.7	60.5	62.3	64.1	65.9	67.7	69.5	71.3

*HEAT EMISSION — SQUARE FEET
No. 5 — 5⅝" Wide

Type "W" Enc. Hgt. Enclosure Height Except Type "W"	"L" Length Inches	13	▲18	20½	▲23	25½	▲28	30½	▲33	35½	▲38	40½	▲43	45½	▲48	50½	▲53	55½	▲58	60½
	Unit No.	513	518	520	523	525	528	530	533	535	538	540	543	545	548	550	553	555	558	560
14	18	8.7	12.3	14.1	15.9	17.7	19.5	21.3	23.1	24.9	26.7	28.5	30.3	32.1	33.9	35.7	37.5	39.3	41.1	42.9
16	▲20	9.5	13.5	15.4	17.4	19.3	21.3	23.2	25.2	27.2	29.2	31.1	33.1	35.0	37.0	38.9	40.9	42.8	44.8	46.7
20	▲24	10.9	15.4	17.6	19.9	22.2	24.4	26.8	28.9	31.1	33.4	35.6	37.9	40.1	42.4	44.6	46.8	49.0	51.3	53.5
22	26	11.6	16.2	18.5	20.9	23.2	25.6	28.0	30.4	32.7	35.1	37.4	39.8	42.1	44.5	46.8	49.2	51.5	53.9	56.3
28	▲32	12.4	17.5	20.1	22.8	25.2	27.7	30.3	32.9	35.4	38.0	40.5	43.1	45.6	48.1	50.7	53.3	55.6	58.4	60.9
34	38	12.9	18.2	20.8	23.5	26.1	28.8	31.4	34.1	36.7	39.4	42.0	44.7	47.3	50.0	52.6	55.3	57.9	60.6	63.2

Type "W" Enc. Hgt. Enclosure Height Except Type "W"	"L" Length Inches	▲63	65½	68	70½	73	75½	78	80½	83	85½	88	90½	93	95½	98	100½
	Unit No.	563	565	568	570	573	575	578	580	583	585	588	590	593	595	598	5100
14	18	44.7	46.5	48.3	50.1	51.9	53.7	55.5	57.3	59.1	60.9	62.7	64.5	66.3	68.1	69.9	71.7
16	▲20	48.7	50.6	52.6	54.5	56.5	58.4	60.4	62.3	64.3	66.2	68.2	70.1	72.1	74.0	76.0	77.9
20	▲24	55.8	58.0	60.3	62.5	64.8	67.0	69.3	71.5	73.8	76.0	78.3	80.5	82.8	85.0	87.3	89.5
22	26	58.7	61.0	63.4	65.7	68.1	70.4	72.8	75.1	77.5	79.8	82.2	84.5	86.9	89.2	91.6	93.9
28	▲32	63.5	66.0	68.6	71.1	73.7	76.2	78.8	81.3	83.9	86.4	89.0	91.5	94.1	96.6	99.2	101.7
34	38	65.9	68.5	71.2	73.8	76.5	79.1	81.8	84.4	87.1	89.7	92.4	95.0	97.7	100.3	103.0	105.6

▲These Units, in heights and lengths indicated, are standardized stock sizes with NFS Enclosure and X-4 Connection only.

*Above ratings are based on 240 Btu (Steam) per Square Foot per hour. To determine size of Arco Cast Iron Convector for water heating systems see "Table of Heat Emission for Various Average Hot Water Temperatures" on page 89.

Above ratings based on front outlet enclosures. For top outlet ratings see table on page 66.

Convector lengths are shown. Standard Enclosures are 1½" longer.

21033

ARCO CAST IRON CONVECTOR

RATINGS — STEAM (215°F.)

STEAM OR WATER RATINGS

***HEAT EMISSION — SQUARE FEET**
No. 7 — 7⅝" Wide

"L" Length Inches		13	18	20½	23	25½	28	30½	▲ 33	35½	▲ 38	40½	▲ 43	45½	▲ 48	50½	▲ 53	55½	▲ 58	60½
Unit No.		713	718	720	723	725	728	730	733	735	738	740	743	745	748	750	753	755	758	760
Type "W" Enc. Hgt.	Enclosure Height Except Type "W"																			
16	▲20	12.1	17.1	19.7	22.2	24.7	27.2	29.7	32.2	34.7	37.2	39.7	42.3	44.8	47.3	49.8	52.3	54.8	57.3	59.8
20	▲24	13.7	19.4	22.2	25.0	27.9	30.7	33.5	36.4	39.2	42.1	44.9	47.8	50.6	53.5	56.3	59.2	62.0	64.9	67.7
22	26	14.4	20.4	23.4	26.4	29.4	32.4	35.4	38.4	41.3	44.3	47.3	50.3	53.3	56.3	59.3	62.3	65.3	68.3	71.3
28	▲32	15.9	22.8	25.8	29.1	32.4	35.7	39.0	42.3	45.6	48.9	52.2	55.5	58.7	62.0	65.3	68.6	71.9	75.2	78.5
34	38	18.7	23.7	27.1	30.6	34.1	37.5	41.0	44.5	47.9	51.4	54.9	58.4	61.8	65.3	68.8	72.3	75.7	79.2	82.9

"L" Length Inches		▲ 63	65½	68	70½	73	75½	78	80½	83	85½	88	90½	93	95½	98	100½
Unit No.		763	765	768	770	773	775	778	780	783	785	788	790	793	795	798	7100
Type "W" Enc. Hgt.	Enclosure Height Except Type "W"																
16	▲20	62.3	64.8	67.3	69.8	72.3	74.8	77.3	79.8	82.3	84.8	87.3	89.8	92.3	94.8	97.3	99.8
20	▲24	70.6	73.4	76.3	79.1	82.0	84.8	87.7	90.5	93.4	96.2	99.1	101.9	104.8	107.6	110.5	113.3
22	26	74.3	77.3	80.3	83.3	86.3	89.3	92.3	95.3	98.3	101.3	104.3	107.3	110.3	113.3	116.3	119.3
28	▲32	81.6	85.1	88.4	91.7	95.0	98.3	101.6	104.9	108.2	111.5	114.8	118.1	121.4	124.7	128.0	131.3
34	38	86.1	89.5	93.0	96.4	99.9	103.3	106.8	110.2	113.7	117.1	120.6	124.0	127.5	130.9	134.4	137.8

***HEAT EMISSION — SQUARE FEET**
No. 9 — 9½" Wide

"L" Length Inches		13	18	20½	23	25½	28	30½	33	35½	▲ 38	40½	▲ 43	45½	▲ 48	50½	▲ 53	55½	▲ 58	60½
Unit No.		913	918	920	923	925	928	930	933	935	938	940	943	945	948	950	953	955	958	960
Type "W" Enc. Hgt.	Enclosure Height Except Type "W"																			
16	▲20	14.5	20.6	23.7	26.7	29.8	32.8	35.9	38.9	41.9	45.0	48.0	51.1	54.1	57.2	60.2	63.3	66.3	69.4	72.4
20	▲24	16.5	23.4	26.9	30.3	33.8	37.2	40.7	44.2	47.6	51.1	54.5	58.0	61.4	64.9	68.3	71.8	75.2	78.7	82.1
22	26	17.3	24.6	28.2	31.8	35.5	39.1	42.7	46.3	50.0	53.6	57.2	60.8	64.5	68.1	71.8	75.4	79.0	82.6	86.2
28	▲32	19.2	27.3	31.3	35.3	39.3	43.3	47.3	51.4	55.4	59.5	63.4	67.5	71.5	75.6	79.5	83.6	87.5	91.6	95.6
34	38	20.3	28.8	33.0	37.2	41.4	45.7	49.9	54.2	58.4	62.7	66.9	71.2	75.3	79.6	83.8	88.1	92.3	96.6	100.8

"L" Length Inches		▲ 63	65½	68	70½	73	75½	78	80½	83	85½	88	90½	93	95½	98	100½
Unit No.		963	965	968	970	973	975	978	980	983	985	988	990	993	995	998	9100
Type "W" Enc. Hgt.	Enclosure Height Except Type "W"																
16	▲20	75.5	78.5	81.6	84.6	87.7	90.7	93.8	96.8	99.9	102.9	106.0	109.0	112.1	115.1	118.2	121.3
20	24	85.6	89.0	92.5	95.9	99.4	102.8	106.3	109.7	113.2	116.6	120.1	123.5	127.0	130.4	133.9	137.3
22	26	89.8	93.4	97.0	100.6	104.2	107.8	111.4	115.0	118.6	122.2	125.8	129.4	133.0	136.6	140.2	143.8
28	▲32	93.7	103.7	107.8	111.8	115.9	119.9	121.0	128.0	132.1	136.1	140.2	144.2	148.3	152.3	156.4	160.4
34	38	103.1	109.3	113.6	117.8	122.1	126.3	130.6	134.8	139.1	143.3	147.6	151.8	156.1	160.3	164.6	168.8

▲ These Units, in heights and lengths indicated, are standardized stock sizes with NFS Enclosure and X-4 connection only.

*Above ratings are based on 240 Btu (Steam) per Square Foot per hour. To determine size of Arco Cast Iron Convector for water heating systems see "Table of Heat Emission for Various Average Hot Water Temperatures" on page 89.

Above ratings based on front outlet enclosures. For top outlet ratings see table on page 66.

Convector lengths are shown. Standard Enclosures are 1½" longer.

ARCO MULTIFIN CONVECTOR

FOR ALL HEATING SYSTEMS EXCEPT ONE-PIPE STEAM

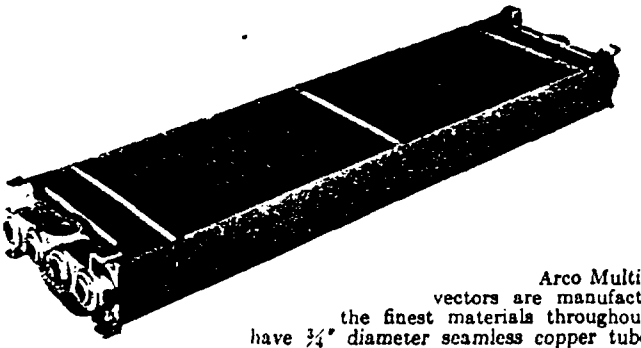

Arco Multifin Convectors are manufactured of the finest materials throughout. They have ¾" diameter seamless copper tubes, non-ferrous fins, cast iron headers and substantial steel side plates. The tubes are expanded after the fins are attached to insure positive and lasting contact, and the tube ends rolled into the headers with brass ferrules to make a leak proof connection. This method of construction, combined with good workmanship, assures unusual sturdiness and lasting qualities.

Arco Multifin Convectors have been tested and rated at our Institute of Heating Research, a further assurance of high heat output and reliability.

ORDERING INSTRUCTIONS — In ordering, specify "Arco Multifin Convector," unit number (from Ratings Table on next page), type of connection (from diagram page 75), and type of system — (steam or water). In ordering Enclosures specify "AMERICAN Enclosures for Arco Multifin Convector," type, unit number, enclosure or panel height and any extra features desired. See next paragraph 'Tappings and Miscellaneous."

TAPPINGS AND MISCELLANEOUS — No. 3 and No. 5 Multifin Units are tapped ¾", No. 7 Unit is tapped 1", No. 10 and No. 14 Units are tapped 1¼". Except where elements only are ordered or when ordered with front panels (type "FP" and "FC"), all units will be shipped assembled in enclosure on welded-in supporting brackets. For elements only and when ordered with front panels — adjustable supporting legs will be furnished.

AMERICAN ENCLOSURES — AMERICAN Enclosures as described on later pages, are made specially for Arco Multifin Convectors and in combination make a most attractive installation.

For Top Outlet Ratings see page 74.

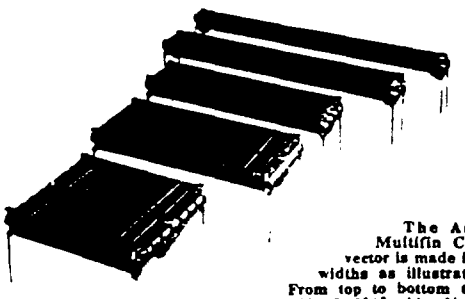

The Arco Multifin Convector is made in 5 widths as illustrated. From top to bottom they are: No. 3, 3⅛" wide; No. 5, 5⅛" wide; No. 7, 7⅛" wide; No. 10, 10⅛" wide; No. 14, 14⅛" wide.

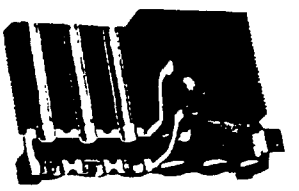

Cutaway view of Arco Multifin Convector, showing the cast iron header, copper tubes, bushings, fins, tapping extension and adjustable legs. Top (or "Y") tapping is shown. Unit is reversed for bottom (or "X") tappings.

21035

ARCO MULTIFIN CONVECTOR

RATINGS — STEAM (215°F.)
FOR ALL SYSTEMS EXCEPT ONE-PIPE STEAM

*HEAT EMISSION — SQUARE FEET
No. 3 — 3⅜" Wide

"L" Length Inches			13⅝	17⅝	21⅝	25⅝	29⅝	35⅝	41⅝	47⅝	53⅝	59⅝
Unit No.			314	318	322	326	330	336	342	348	354	360
Type "W" Enclosure Hgt.	14	Enclosure Hgt. Exc. Type "W" 18	6.5	8.7	10.9	13.1	15.4	18.7	22.0	25.3	28.7	32.0
	16	20	7.0	9.4	11.8	14.1	16.5	20.1	23.7	27.3	30.8	34.4
	20	24	7.8	10.4	13.1	15.7	18.4	22.3	26.3	30.2	34.2	38.2
	22	26	8.1	10.8	13.6	16.4	19.1	23.2	27.4	31.5	35.7	39.9
	28	32	8.8	11.8	14.8	17.8	20.8	25.3	29.8	34.3	38.8	43.2
	34	38	9.2	12.3	15.5	18.6	21.7	26.4	31.1	35.8	40.5	45.2

*HEAT EMISSION — SQUARE FEET
No. 5 — 5⅜" Wide

"L" Length Inches			13⅝	17⅝	21⅝	25⅝	29⅝	35⅝	41⅝	47⅝	53⅝	59⅝
Unit No.			514	▲518	▲522	▲526	▲530	▲536	▲542	▲548	▲554	▲560
Type "W" Enclosure Hgt.	14	Enclosure Hgt. Exc. Type "W" 18	9.9	13.4	16.8	20.3	23.7	28.9	34.1	39.3	44.5	49.7
	16	▲20	10.6	14.3	18.0	21.8	25.5	31.1	36.7	42.2	47.8	53.4
	20	▲24	11.8	15.9	20.1	24.2	28.4	34.6	40.8	47.1	53.3	59.5
	22	26	12.3	16.6	21.0	25.3	29.6	36.1	42.6	49.1	55.6	62.1
	28	▲32	13.5	18.2	23.0	27.8	32.6	39.7	46.8	53.9	61.1	68.3
	34	38	14.3	19.3	24.4	29.4	34.4	42.0	49.6	57.1	64.7	72.2

*HEAT EMISSION — SQUARE FEET
No. 7 — 7⅜" Wide

"L" Length Inches			13⅝	17⅝	21⅝	25⅝	29⅝	35⅝	41⅝	47⅝	53⅝	59⅝
Unit No.			714	718	722	726	▲730	▲736	▲742	▲748	▲754	▲760
Type "W" Enclosure Hgt.	14	Enclosure Hgt. Exc. Type "W" 18	13.3	18.0	22.7	27.4	32.1	39.2	46.2	53.3	60.3	67.4
	16	▲20	14.0	19.0	23.9	28.8	33.8	41.2	48.6	56.1	63.6	70.9
	20	▲24	15.2	20.6	26.0	31.4	36.8	44.9	53.0	61.1	69.2	77.3
	22	26	15.7	21.3	26.9	32.5	38.1	46.5	54.9	63.4	71.8	80.2
	28	▲32	17.2	23.3	29.4	35.4	41.5	50.6	59.7	68.9	78.0	87.1
	34	38	18.1	24.5	30.9	37.3	43.7	53.3	63.0	72.6	82.2	91.8

*HEAT EMISSION — SQUARE FEET
No. 10 — 10⅜" Wide

"L" Length Inches			13⅝	17⅝	21⅝	25⅝	29⅝	35⅝	41⅝	47⅝	53⅝	59⅝
Unit No.			1014	1018	1022	1026	1030	1036	▲1042	▲1048	▲1054	▲1060
Type "W" Enclosure Hgt.	14	Enclosure Hgt. Exc. Type "W" 18	17.4	23.8	30.2	36.6	43.0	52.6	62.2	71.8	81.4	91.0
	16	▲20	18.2	24.9	31.6	38.3	45.0	55.1	65.2	75.3	85.3	95.4
	20	▲24	19.8	27.1	34.3	41.6	48.9	59.7	70.7	81.6	92.5	103.4
	22	26	20.5	28.1	35.6	43.2	50.7	62.0	73.3	84.6	96.0	107.4
	28	▲32	22.3	30.4	38.6	46.8	55.0	67.2	79.5	91.8	104.0	116.3
	34	38	23.5	32.1	40.8	49.4	58.0	70.9	83.9	96.8	109.8	122.7

*HEAT EMISSION — SQUARE FEET
No. 14 — 14⅜" Wide

"L" Length Inches			13⅝	17⅝	21⅝	25⅝	29⅝	35⅝	41⅝	47⅝	53⅝	59⅝
Unit No.			1414	1418	1422	1426	1430	1436	1442	1448	1454	1460
Type "W" Enclosure Hgt.	14	Enclosure Hgt. Exc. Type "W" 18	20.6	28.2	35.9	43.5	51.2	62.6	74.1	85.6	97.0	108.5
	16	20	21.9	30.0	38.0	46.1	54.2	66.3	78.4	90.5	102.6	114.7
	20	24	24.2	33.2	42.1	51.0	59.9	73.3	86.7	100.1	113.5	126.8
	22	26	25.3	34.6	43.9	53.3	62.6	76.6	90.6	104.5	118.5	132.5
	28	32	27.9	38.2	48.4	58.7	68.9	84.3	99.7	115.0	130.4	145.7
	34	38	29.7	40.6	51.6	62.5	73.4	89.9	106.2	122.6	139.0	155.4

▲These Units, in heights and lengths indicated, are standardized stock sizes with "NFS" Enclosure and X-4 connection only.

*Above ratings are based on 240 Btu (Steam) per Square Foot per hour. To determine size of Arco Multifin Convector for water heating systems see "Table of Heat Emission for Various Average Hot Water Temperatures" on page 89.

Above ratings based on front outlet enclosures. For top outlet ratings see table on page 74.

Convector Lengths are shown. Standard Enclosures are 1½" longer.

ARCO MULTIFIN CONVECTOR

STOCK MODEL

For use with Two-Pipe Steam or Forced Hot Water System

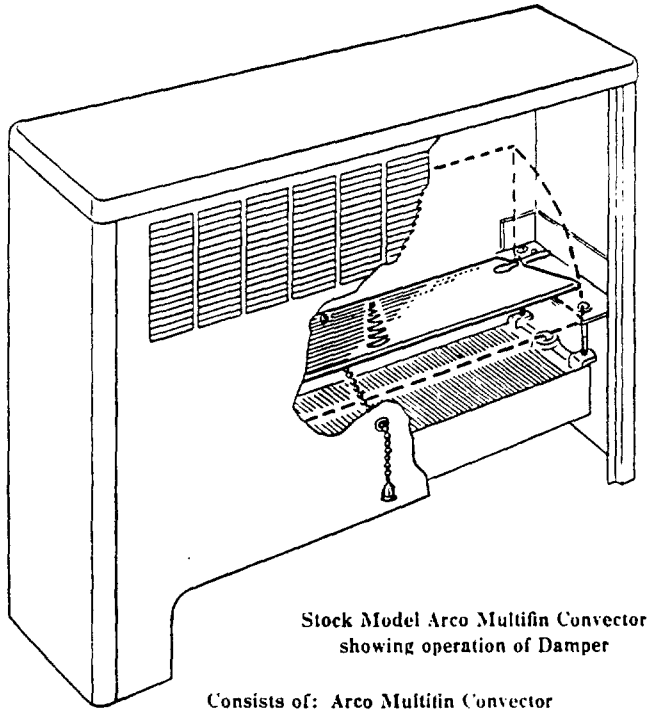

Stock Model Arco Multifin Convector
showing operation of Damper

Consists of: Arco Multifin Convector
NFS Enclosure

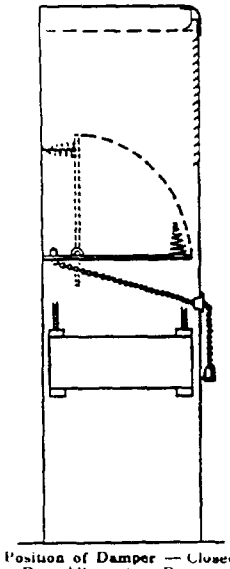

Position of Damper — Closed.
Dotted lines show Damper completely open.

Enclosure Furnished with:

- Full Flow Damper
- Arched Front Inlet Opening
- Exposed Corners and Edges rounded on ½" radius
- Welded-in Convector Supporting Brackets
- Welded-in Bottom Floor Angle Clips
- Slotted Bolt Holes in Back
- Prime Coat of Gray Paint

For Enclosure Installation details see page 76.
For Arco Multifin Convector details see pages 69.
For "Stock Model" Ratings and Data see next page.

21037

ARCO MULTIFIN CONVECTOR

WITH "NFS" ENCLOSURE

STOCK MODEL

For Use with Two-Pipe Steam or Forced Hot Water System

RATINGS AND DATA — STEAM (215°F.)

Heat Emission — Sq. Ft. — Based on 240 Btu (Steam) per Sq. Ft. per Hr.

"L" Length Inches	No. 5 — 5⅜" Width		No. 7 — 7¼" Width		No. 10 — 10⅛" Width	
	Unit Number	Square Foot Output	Unit Number	Square Foot Output	Unit Number	Square Foot Output
20" HEIGHT						
17⅝	518-20	14.3	.....	.....	.....	.....
21⅝	522-20	18.0	.....	.....	.....	.....
25⅝	526-20	21.8	.....	.....	.....	.....
29⅝	530-20	25.5	730-20	33.8	.....	.....
35⅝	536-20	31.1	736-20	41.2	.....	.....
41⅝	542-20	36.7	742-20	48.6	1042-20	65.2
47⅝	548-20	42.2	748-20	56.1	1048-20	75.3
53⅝	554-20	47.8	754-20	63.4	1054-20	85.3
59⅝	560-20	53.4	760-20	70.9	1060-20	95.4
24" HEIGHT						
17⅝	518-24	15.9	.....	.....	.....	.....
21⅝	522-24	20.1	.....	.....	.....	.....
25⅝	526-24	24.2	.....	.....	.....	.....
29⅝	530-24	28.4	730-24	36.8	.....	.....
35⅝	536-24	34.6	736-24	44.9	.....	.....
41⅝	542-24	40.8	742-24	53.0	1042-24	70.7
47⅝	548-24	47.1	748-24	61.1	1048-24	81.6
53⅝	554-24	53.3	754-24	69.2	1054-24	92.5
59⅝	560-24	59.5	760-24	77.3	1060-24	103.4
32" HEIGHT						
17⅝	518-32	18.2	.....	.....	.....	.....
21⅝	522-32	23.0	.....	.....	.....	.....
25⅝	526-32	27.8	.....	.....	.....	.....
29⅝	530-32	32.6	730-32	41.5	.....	.....
35⅝	536-32	39.7	736-32	50.6	.....	.....
41⅝	542-32	46.8	742-32	59.7	1042-32	79.5
47⅝	548-32	53.9	748-32	68.9	1048-32	91.8
53⅝	554-32	61.1	754-32	78.0	1054-32	104.0
59⅝	560-32	68.3	760-32	87.1	1060-32	116.3

Stock Model Convectors furnished only with X-4 connections.

Gravity Hot Water Convectors available on special order.

Note: To determine size of Arco Multifin Convector for Water Heating Systems see "Table of Heat Emission for Various Average Hot Water Temperatures" on page 89.

Length equals dimension "L" plus 1½". For "L" dimension see page 70.

Enclosure Depth equals Convector Width plus ⅜".

21038

CONVECTOR DIMENSIONS

ARCO CAST IRON CONVECTOR

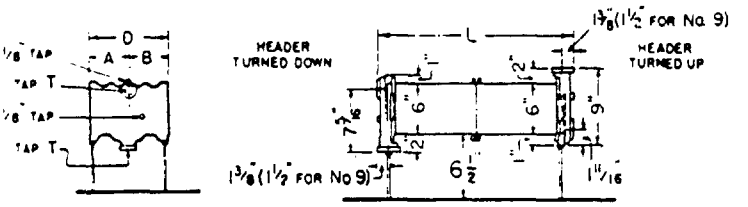

Type	Depth D	Tapping — Location		Tapping — Size
		A	B	T
No. 3	3¾"	1⅜"	1⅜"	1¼"
No. 5	5⅜"	2 11/16"	2 11/16"	1¼"
No. 7	7⅜"	3 11/16"	3 11/16"	1½"
No. 9	9½"	4¾"	4¾"	1½"

Convector legs permit slight adjustment in height.
For "L" dimension indicated in drawing, see pages 67 and 68.

ARCO MULTIFIN CONVECTOR

For All Systems Except One-Pipe Steam

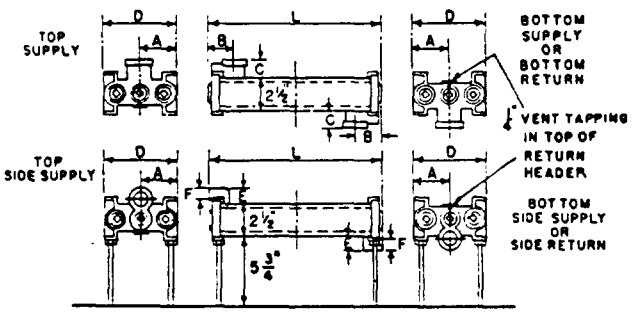

Type	Depth D	A	B	C	E	F	Tapping Size
No. 3	3¾"	1 11/16"	1 13/16"	1¾"	1 11/16"	1¼"	¾"
No. 5	5⅜"	2 11/16"	1 13/16"	1¾"	1⅜"	1¼"	¾"
No. 7	7⅜"	3 11/16"	1 13/16"	1¾"	1¾"	1¼"	1"
No. 10	10⅜"	5⅛"	2⅜"	1¾"	1 11/16"	1¼"	1¼"
No. 14	14⅜"	7⅛"	2⅜"	1¾"	1 11/16"	1¼"	1¼"

Convector legs permit slight adjustment in height.
For "L" dimension indicated in drawing see page 70.

21039

TYPICAL PIPING DIAGRAMS

ARCO CAST IRON CONVECTOR

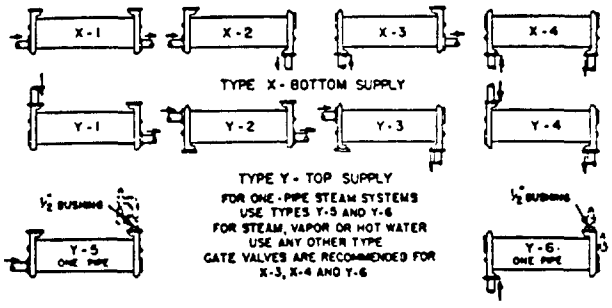

Note: Flush plugs are installed in side tappings of convectors making dimension "L" overall length. Add ½" to "L" for each bushing when side tappings are used smaller than header tappings. ¼" vent tappings provided in all headers. See pages 67 and 68 for "L" dimension.

ARCO MULTIFIN CONVECTOR

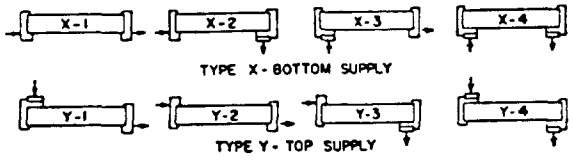

Note: Type Y Headers not to be used on up-feed hot water systems. ¼" vent tapping provided on top of all return headers.

Flush plugs are installed in side tappings of convectors making dimension "L" overall length. Add ½" to "L" for each bushing when side tappings are used smaller than header tappings. See page 70 for "L" dimension.

TOP OUTLET RATINGS

ARCO MULTIFIN CONVECTOR

Where top outlet grilles are used in enclosures — output ratings may be increased as shown, for following enclosure heights only:

Type "W" Enclosure Height	Enclosure Height Except Type "W"	Multiply Ratings By
14	18	1.15
16	20	1.10
20	24	1.04
22	26	1.02

No increase in Ratings beyond above Enclosure Heights shown.

Note: For "Table of Heat Emission for Various Average Hot Water Temperatures" see page 89.

STANDARD CONNECTIONS FOR CAST IRON AND MULTIFIN CONVECTORS

"Size larger" refers to a 2½" increment over standard enclosure length for ALL types of convectors.

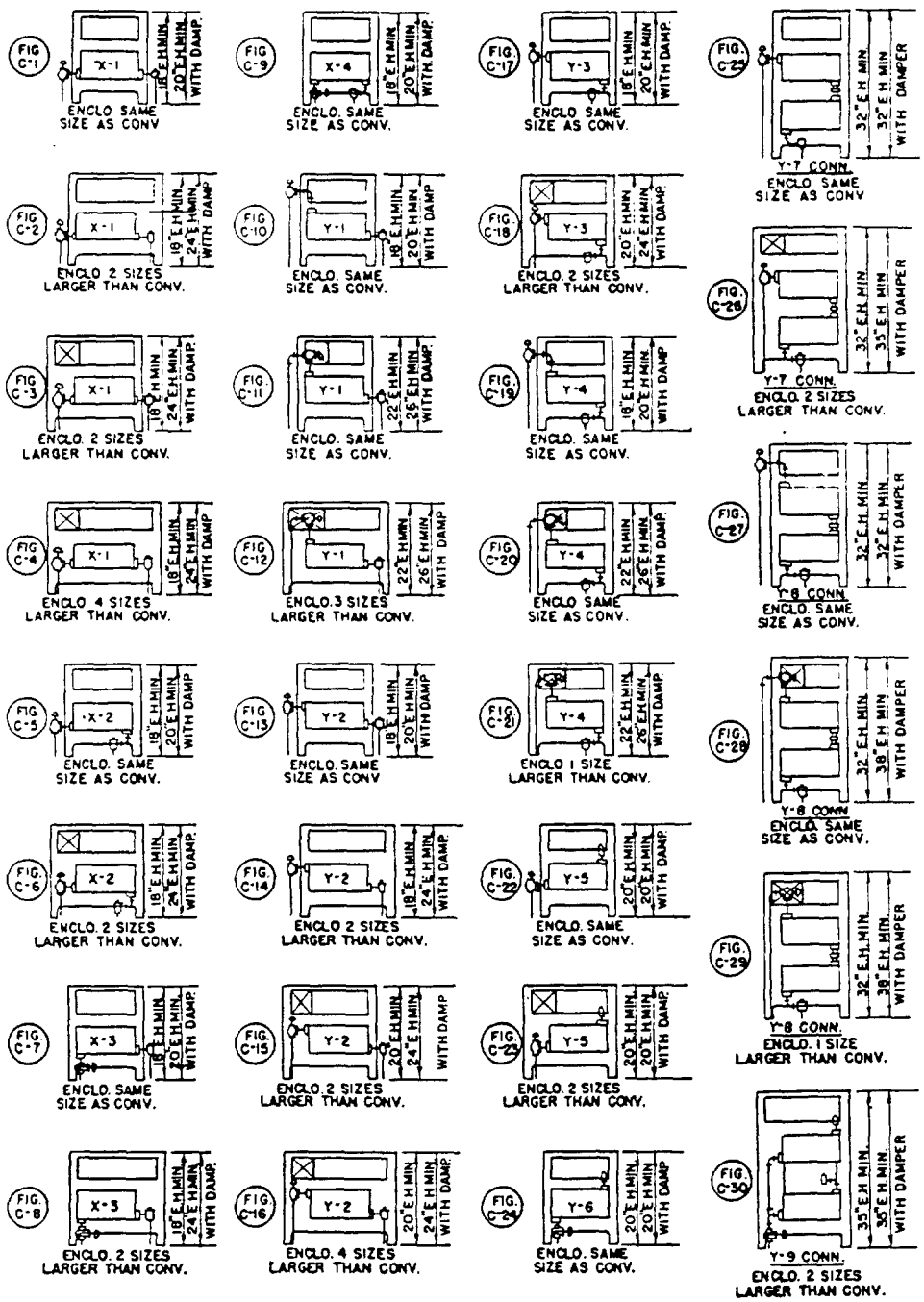

Arco Cast Iron Convectors are shown. Connections for Multifin Convectors are similar using 2½" as a "size larger" for obtaining proper enclosure length.

NOTE: For detailed drawings of Figures C-25 to C-30, see page 84.

21041

ARCO ENCLOSURES

TYPE NFS — COMPLETE ENCLOSURE

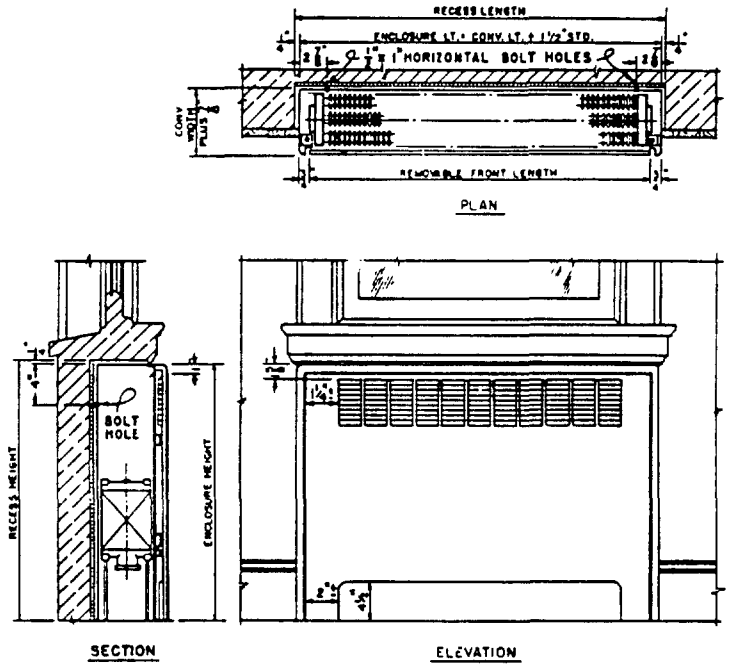

Arco Cast Iron Convector is shown
Dimensions for Arco Multifin Convector are similar

EXAMPLE FOR ORDERING:

1 — NFS 340 Arco Convector Enclosure 26" E.H. 25.3 Sq. Ft.
Streamline grille and arch inlet
For Y-6 conn. Fig. No. C-24

TYPE NFS (Free Standing) — is a complete enclosure for general use and can be free standing, although usually partially recessed, and has a removable pan type front. The enclosure is 1½" longer and ⅞" deeper than corresponding Convector, and is made in standard heights of: 18", 20", 24", 26", 32", and 38". The ends are provided with knockouts in case end connections of Convector are to be used. The back is provided with holes for securing to back of recess. Access to valve is obtained through the inlet arch. Streamline front outlet grille, inlet arch and rounded corners are standard. In ordering specify type, unit number, enclosure height and any optional features desired.

RECESS DIMENSIONS: Length = Enclosure length plus ½". Height = enclosure height plus ¼". Depth depends on wall construction.

INSTALLATION — It is recommended that X-4 or Y-6, underneath connection, and gate valve be used wherever possible. If other connections are required and enclosure is recessed, provision must be made for valve and trap space and access to valve. See page 75 for all possible connections and proper enclosure size. Enclosure may be used in recessed wall treatment or free standing against wall. If recessed in wall, plaster should finish against the ends and top of enclosure. If recessed under wood stool, plaster should finish against ends of enclosure, and stool and apron should be fitted between stool and enclosure top. Scribe moulding may be used at ends of enclosure.

Note: For optional features see pages 84 and 85.

21042

ARCO ENCLOSURES

TYPE PF (Plaster Front) *COMPLETE ENCLOSURE

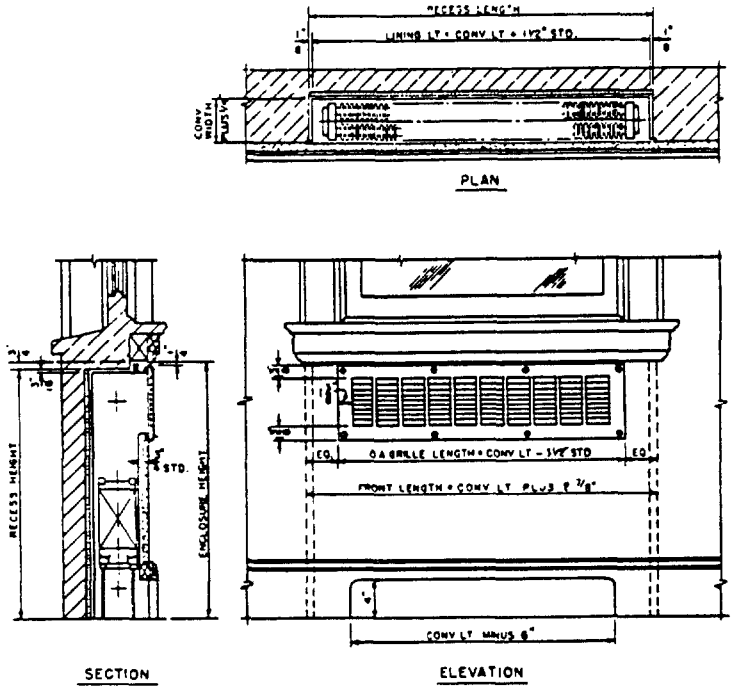

Arco Cast Iron Convector is shown
Dimensions for Arco Multiflo Convector are similar

EXAMPLE FOR ORDERING:

1 — PF 335 Arco Convector Enclosure 26″ E.H. 22.2 Sq. Ft.
Streamline grille and open inlet
For X-4 conn. Fig. No. C-9

TYPE PF (Plaster Front) — Is a complete enclosure designed for use in plaster or tile treatment and must be fully recessed. The front rests against the studding, being 1⅜″ longer than lining and is provided with holes for securing wire lath. The throat projects ¾″ for thickness of plaster unless otherwise specified and is flanged to receive outlet grille. The inlet throat has holes to fasten ground to which baseboard may be nailed. Baseboard with arch inlet 4″ high should be provided. The enclosure lining is 1½″ longer than corresponding Convector, is provided with flanges at ends and top turned outwardly 11/16″. Standard heights of: 18″, 20″, 24″, 26″, 32″ and 38″ are from floor to top of lining flange. Access to valve is obtained through the inlet arch. Streamline front outlet grille with ⅜″ rolled edge is standard. In ordering specify type, unit number, enclosure height, whether for plaster or tile, and any optional features desired. When tile is specified a 1½″ throat to receive outlet grille is furnished.

***TYPE PFP (Plaster Front Panel only) — Is the front section of a PF enclosure with lining omitted. Use same recess dimensions except Depth which can be decreased to convector width plus ¼″ due to omission of lining.**

INSTALLATION — It is recommended that X-4 or Y-6, underneath connections and gate valve be used wherever possible and 4″ inlet arch in baseboard be provided. If other connections are used, provision must be made for valve and trap space and access to valve. See page 75 for all possible connections and proper enclosure size.

21043

Note: For optional features see pages 84 and 85.

ARCO ENCLOSURES

TYPE W (Wall Hung)

COMPLETE ENCLOSURE

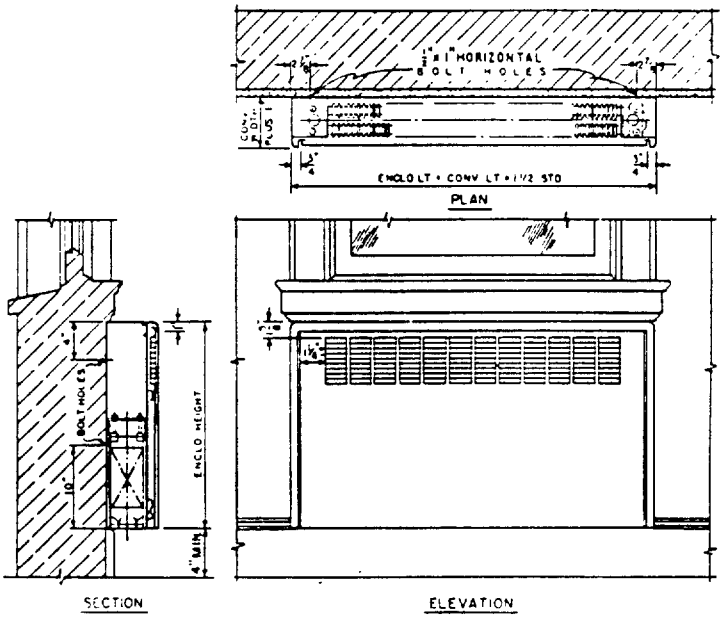

Arco Cast Iron Convector is shown

Dimensions for Arco Multifin Convector are similar

EXAMPLE FOR ORDERING:

1 — W 550 Arco Convector Enclosure 20" E.H. 44.6 Sq. Ft.
Streamline grille
For Y-2 conn. Fig. No. C-13

TYPE W (Wall Hung) — Is a complete enclosure for wall hung treatment and has a removable pan type front. The enclosure is 1½" longer and 1" deeper than corresponding Convector and is made in standard heights as shown in rating tables. The ends are provided with knockouts when end connections are to be used. The back is provided with holes for securing to wall. Made in standard heights of: 14", 16", 20", 22", 28" and 34". Streamline front outlet grille and rounded corners are standard. In ordering specify type, unit number, enclosure height and any optional features desired.

Note: Not furnished for double-tiered convectors.

INSTALLATION — It is recommended that X-4, underneath connections, and gate valve be used wherever possible. If other connections are required, see page 75 for all possible connections and proper enclosure lengths for same.

Note: For optional features see pages 84 and 85.

21044

ARCO ENCLOSURES

TYPE SW (Wall Hung)

COMPLETE ENCLOSURE

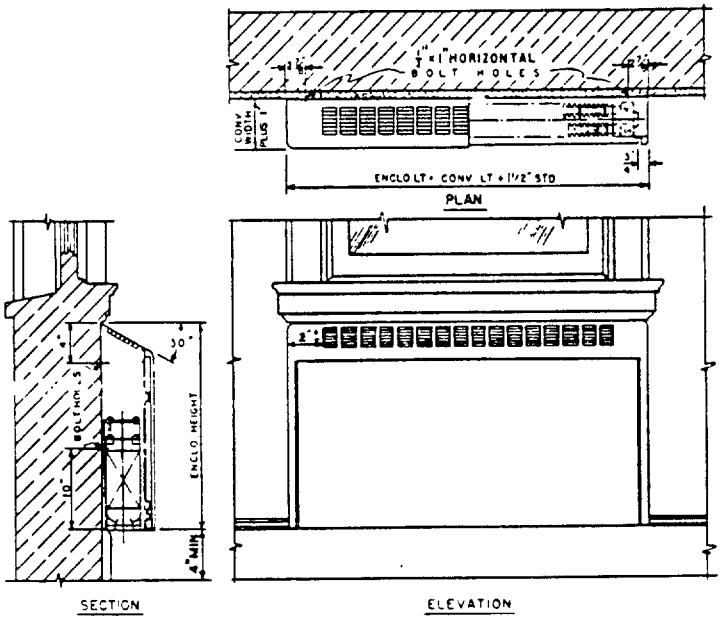

Arco Cast Iron Convector is shown. Dimensions for Arco Multifin Convector are similar

EXAMPLE FOR ORDERING:

1 — SW 340 — Arco Convector Enclosure 22" E.H. 25.3 Sq. Ft.
Streamline grille and rounded corners
For X-4 conn. Fig. No. C-9.

TYPE SW Sloping Top — (Wall Hung) — Is a complete enclosure for wall hung treatment and has a removable pan type front. The enclosure is 1½" longer and 1" deeper than corresponding Convector and is made in standard heights to top of slope as shown in rating tables. Slope is on 30 degree angle. The ends are provided with knockouts when end connections are to be used. The back is provided with holes for securing to wall. Made in standard heights of: *14", *16", 20", 22", 28" and 34". Streamline outlet grille in sloping top and rounded corners are standard. In ordering specify type, unit number, enclosure height and any optional features desired.

*14" and 16" Enclosure Heights not recommended for Arco Cast Iron Convectors

Note: Not furnished for double-tiered Convectors.

INSTALLATION — It is recommended that X-4, underneath connections, and gate valve be used wherever possible. If other connections are required, see page 75 for all possible connections and proper enclosure lengths for same.

Note: For optional features see pages 84 and 85.

21045

ARCO ENCLOSURES

TYPE SW (Wall Hung)

COMPLETE ENCLOSURE

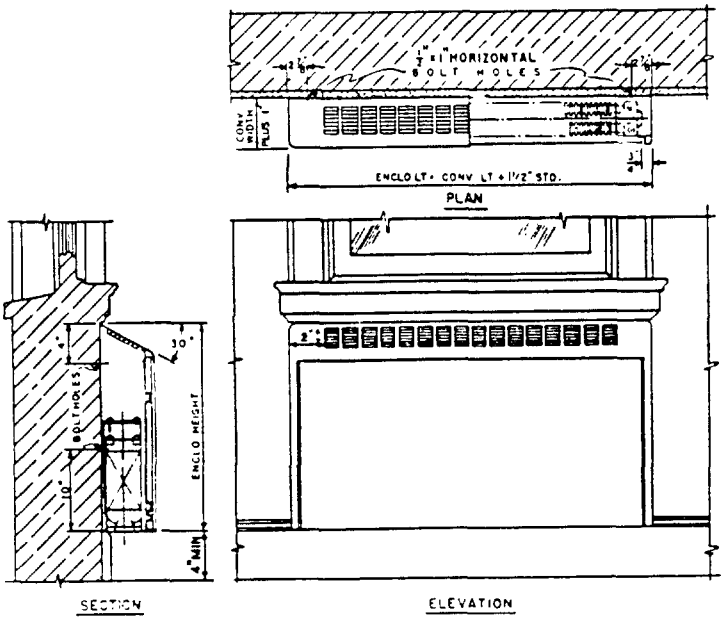

Arco Cast Iron Convector is shown. Dimensions for Arco Multifin Convector are similar

EXAMPLE FOR ORDERING:

1 — SW 340 — Arco Convector Enclosure 22″ E.H. 25.3 Sq. Ft.
Streamline grille and rounded corners
For X-4 conn. Fig. No. C-9.

TYPE SW Sloping Top — (Wall Hung) — Is a complete enclosure for wall hung treatment and has a removable pan type front. The enclosure is 1½″ longer and 1″ deeper than corresponding Convector and is made in standard heights to top of slope as shown in rating tables. Slope is on 30 degree angle. The ends are provided with knockouts when end connections are to be used. The back is provided with holes for securing to wall. Made in standard heights of: *14″, *16″, 20″, 22″, 28″ and 34″. Streamline outlet grille in sloping top and rounded corners are standard. In ordering specify type, unit number, enclosure height and any optional features desired.

***14″ and 16″ Enclosure Heights not recommended for Arco Cast Iron Convectors**

Note: Not furnished for double-tiered Convectors.

INSTALLATION — It is recommended that X-4, underneath connections, and gate valve be used wherever possible. If other connections are required, see page 75 for all possible connections and proper enclosure lengths for same.

Note: For optional features see pages 84 and 85.

21046

ARCO ENCLOSURES

TYPE OF AND OFC (Overlap Front)

COMPLETE ENCLOSURE

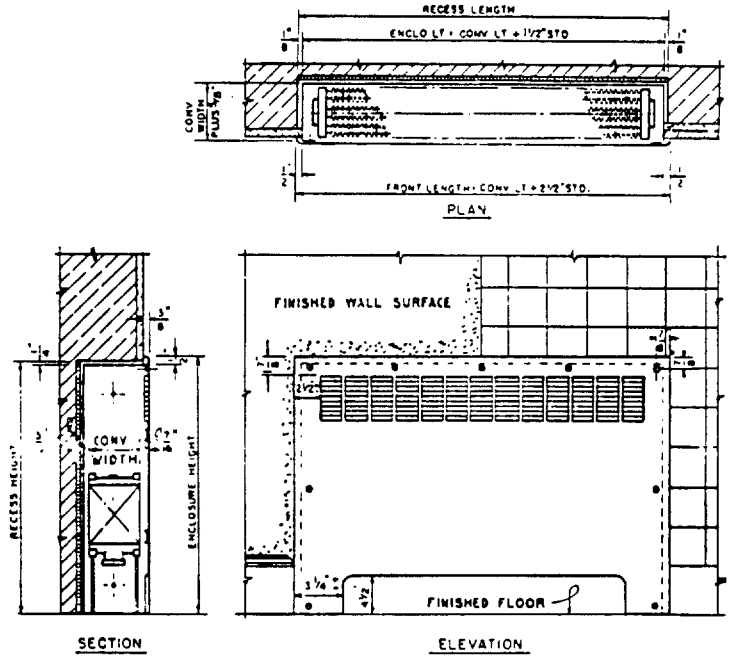

Arco Cast Iron Convector is shown
Dimensions for Arco Multifin Convector are similar

EXAMPLE FOR ORDERING:

1 — OF 550 Arco Convector Enclosure 26" E.H. 46.8 Sq. Ft.
Streamline grille and arch inlet
For X-4 conn. Fig. No. C-9

TYPE OF — Fronts secured with screws.
TYPE OFC — Fronts secured with friction clips — 60" maximum length.

Complete "Overlap Front" enclosures for recess treatment, either in blank walls or under windows. Standard designs with 3/8" rolled edges on fronts are for fully recessed installation. When specified on order, fronts can be furnished with return flanges on top and sides with rounded corners for partially recessed installations. Standard flange depth is 1 5/8". The fronts overlap linings ½" at top and each end and are secured to linings by screws for Type OF and by friction clips for Type OFC. The enclosure lining is 1½" longer and 5/8" deeper than corresponding Convector and the front, or "enclosure height," is made in standard heights of: 18", 20", 24", 26", 32" and 38". The ends are provided with holes for securing to ends of recess. Access to valve is obtained through inlet arch. Streamline front outlet grille and inlet arch are standard. In ordering, specify type, unit number, enclosure height and any special features desired.

RECESS DIMENSIONS: Length = lining length plus ¼". Height = front height minus ¼". Depth = Convector depth plus 3/8" for flush treatment. For projected treatment, flange depth = lining depth minus available recess depth.

INSTALLATION — It is recommended that X-4 or Y-6, underneath connections, and gate valve be used wherever possible. If other connections are required, provision must be made for valve and trap space and access to valve. See page 75 for all possible connections and proper enclosure size. In case recess is of insufficient depth to accommodate enclosure with ¾" rolled edge fronts, wall must be furred to suit, as enclosure front sets against finished wall, or fronts must be ordered with return flanges of required depth and recess built accordingly.

Note: For optional features see pages 84 and 85.

21047

ARCO ENCLOSURES

TYPE FC (Front Panel)

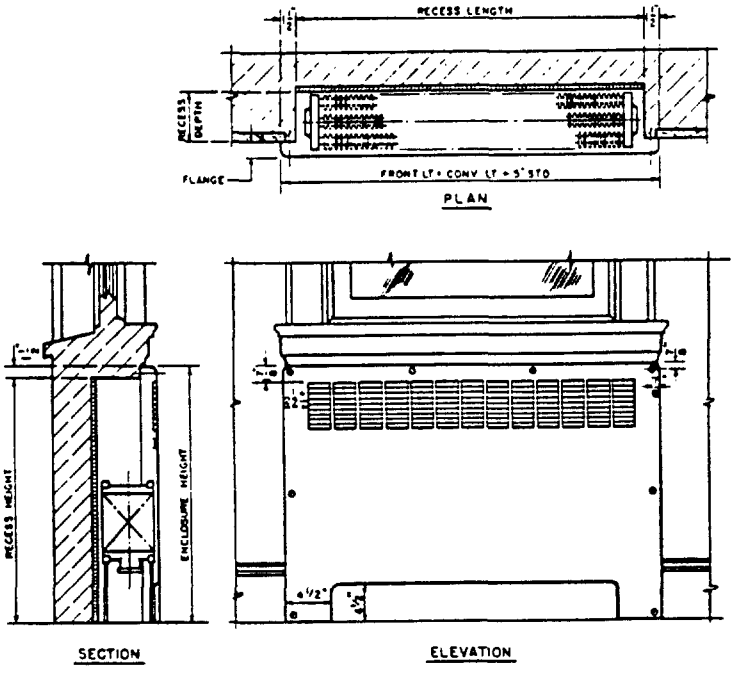

Arco Cast Iron Convector is shown
Dimensions for Arco Multifin Convector are similar

EXAMPLE FOR ORDERING:

1 — FC 540 Arco Convector Panel 26" E.H. 37.4 Sq. Ft.
Streamline grille and arch inlet
For Y-6 conn. Fig. No. C-24

TYPE FC (Flanged Front) — Is a front panel only, designed for recess treatment only with top and side flange that sets against face of plaster and is used where wider Convectors are required in shallow recesses. It is made to overlap recess at top and sides, and is provided with screw holes for securing to wood grounds. It is 5" longer than corresponding Convector and made in standard heights of: 18", 20", 24", 26", 32" and 38". Access to valve is obtained through inlet arch. Streamline front outlet grille inlet arch and rounded corners are standard. In ordering, specify type, unit number, front panel height and any optional features desired.

RECESS DIMENSIONS — Length = Front Panel length minus 3". Height = front panel height minus 1½". Depth depends on wall construction.

INSTALLATION — It is recommended that X-4 or Y-6, underneath connections, and gate valve be used wherever possible. If other connections are required, provision must be made for valve and trap space and access to valve. See page 75 for all possible connections and proper enclosure size. Finished recess depth plus projection of front panel should equal convector depth plus ⅛". Scribe moulding may be used at ends of front. Standard flanges for use with Arco Cast Iron and Multifin Convectors are 1⅝" for No. 5, 3⅝" for No. 7. Wider flange FC panels not recommended. Type "FP" is recommended for No. 3.

Note: For optional features see pages 84 and 85.

21048

ARCO ENCLOSURES

TYPE FP (Front Panel)

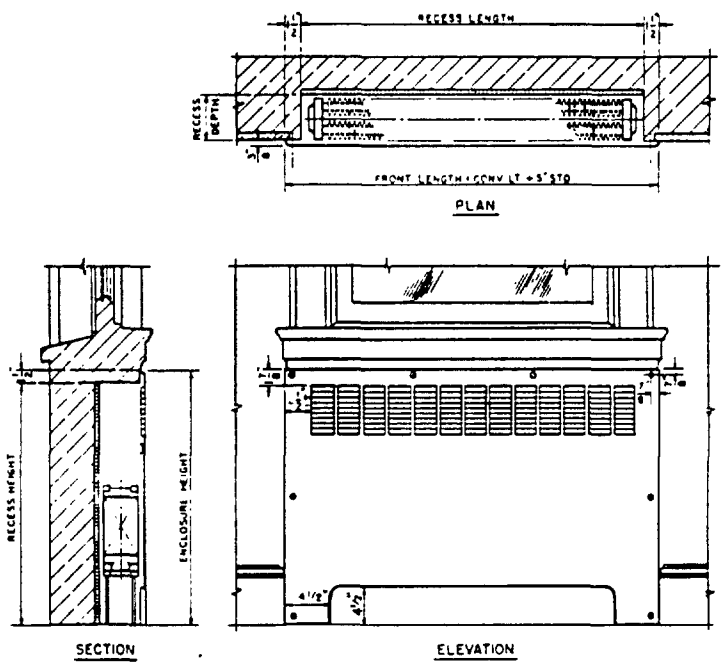

Arco Cast Iron Convector is shown

Dimensions for Arco Multifin Convector are similar

EXAMPLE FOR ORDERING:

1 — FP 340 Arco Convector Panel 26" E.H. 25.3 Sq. Ft.
Streamline grille and arch inlet
For Y-6 conn. Fig. No. C-24

TYPE FP (Flush Front) — Is a front panel only, designed for recess treatment only. It is flush with plaster and made to overlap recess at top and sides and is provided with screw holes for securing to wood grounds. It is 5" longer than corresponding Convector and made in standard heights of: 18", 20", 24", 26", 32" and 38". Access to valve is obtained through inlet arch. Streamline front outlet grille and inlet arch are standard. ⅜" rolled edge at top and sides is standard. In ordering, specify type, unit number, front panel height and any optional features desired.

RECESS DIMENSIONS — Length = Front Panel length minus 3". Height = front panel height minus 1½". Depth = Convector width plus ¼".

INSTALLATION — It is recommended that X-4 or Y-6 underneath connections, and gate valve be used wherever possible. If other connections are required, provision must be made for valve and trap space and access to valve. See page 75 for all possible connections and proper enclosure size. Recess should only be of sufficient depth to take Convector.

Note: For optional features see pages 84 and 85.

21049

ARCO ENCLOSURES

TYPE OK (For Free Standing Arco Radiators Only)

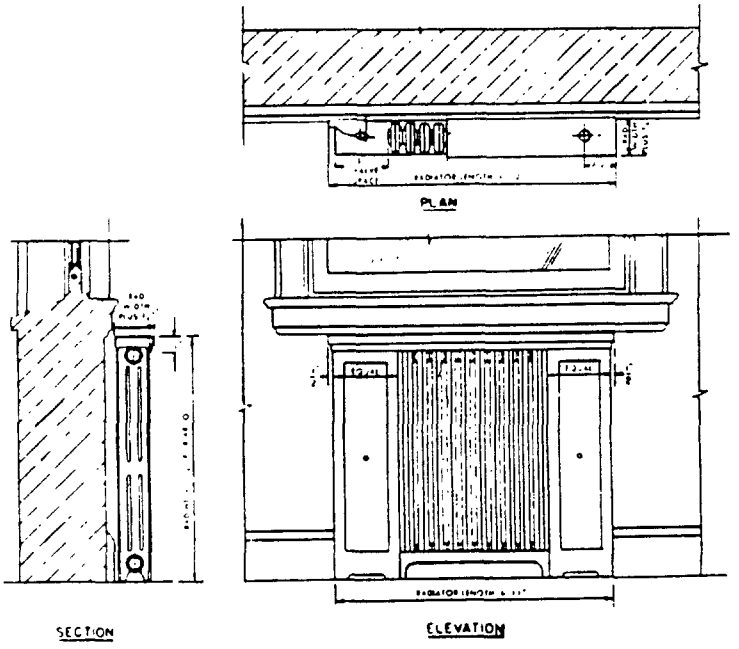

Type OK is a complete enclosure for free-standing Arco Radiators. It frames the radiator attractively, with its simple, graceful lines, and harmonizes with the decorative scheme of any room. The OK regularly leaves the front of radiator exposed so as not to affect the constant flow of radiant heat, but the top and sides are completely covered. To protect walls and draperies, backs can be furnished. The arched inlet covers bottoms of sections and enhances appearance. Union Jack front as shown below is optional.

Either lift panels or hinged access doors are available that permit easy access to valves. Entire enclosure can be put on or removed in a few minutes. The OK is made scientifically to combine beauty and efficiency, and its sturdy construction assures permanence. Lift doors are standard and omitted only when access door is specified.

In ordering OK enclosure specify number of sections, number of tubes, radiator height and any optional features desired.

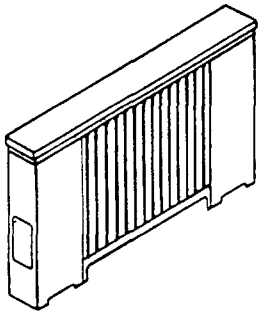

Type OK with Access Door

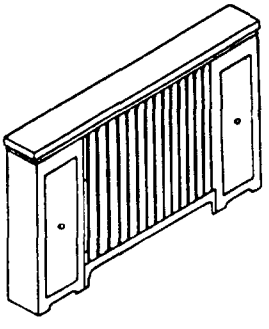

Type OK with Lift Panels. Standard Unit

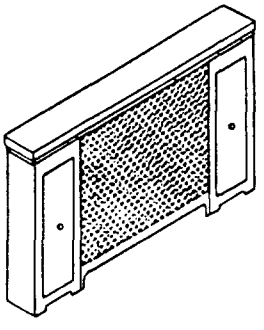

Type OK with Union-Jack Front

21050

ARCO ENCLOSURES

OPTIONAL FEATURES AT EXTRA COST

Damper can be furnished on all types.
Inlet grille can be furnished on all types except "W" and "SW."
Panel moulding can be furnished on all types except "PF" and "PFP."
Access door can be furnished on all types.
Stool outlet grille for vertical discharge can be furnished on types "NFS" and "W".
Insulation can be furnished.

STANDARD PRACTICE

DOUBLE TIERED ARCO CAST IRON CONVECTORS

Except for types "W" and "SW" Wall Hung Enclosures.

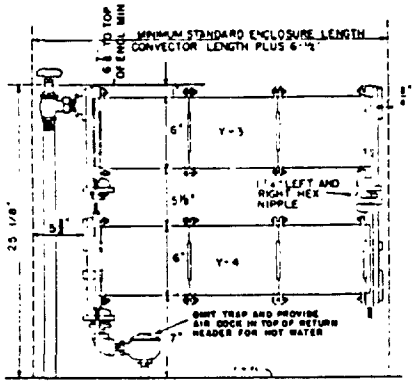

Type Y-7

For Two-Pipe Steam and Hot Water
Minimum Enclosure Height 32"

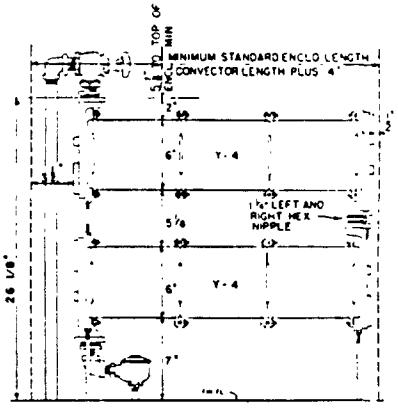

Type Y-8

For Two-Pipe Steam
Minimum Enclosure Height 32"

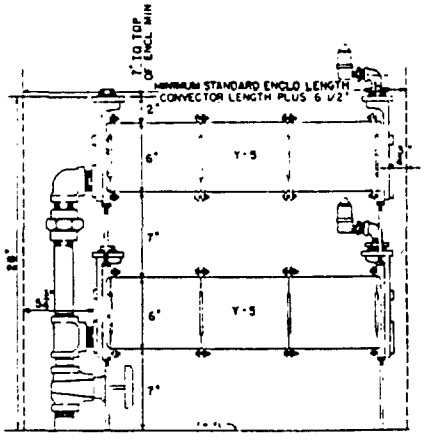

Type Y-9

For One-Pipe Steam Only
Minimum Enclosure Height 32"

Note: Specify 6¾" outlet grille for No. 7 and No. 9 Cast Iron Convectors. Add 3" to minimum height requirement for Y-7 and Y-8 conn. for this grille.

21051

Note: See Figures C-25 to C-30 inclusive on Page 75 for Standard Connections for Double Tiered Arco Cast Iron Convectors.

OPTIONAL FEATURES ON STANDARD ENCLOSURES AND FRONT PANELS

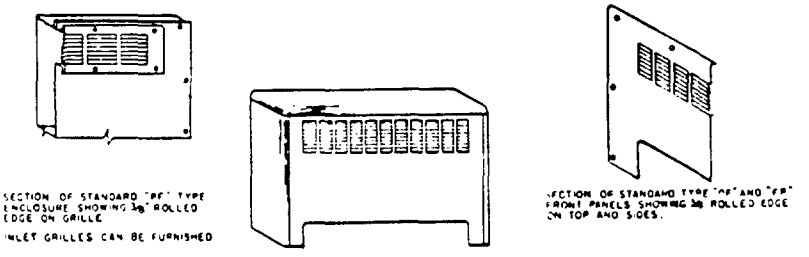

STREAMLINE FRONT OUTLET GRILLE, ROUNDED CORNERS AND ARCHED INLET
STANDARD

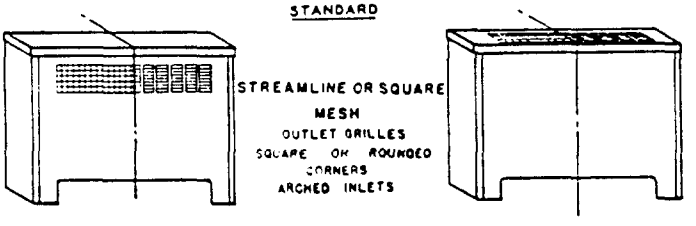

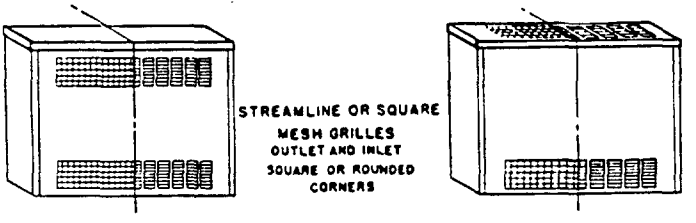

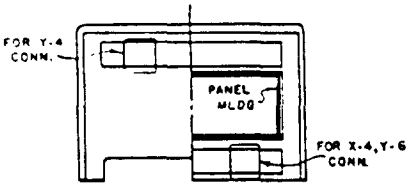

Typical Access Door Locations

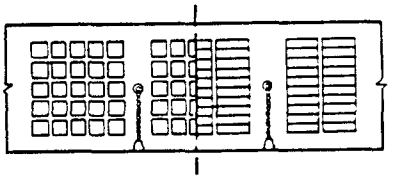

Typical Damper Locations in Standard Grilles

ABOVE OPTIONAL FEATURES APPLY TO ALL ENCLOSURES AND PANELS IN ANY COMBINATION

Special Gauges and Designs can be furnished to order.

Access Doors, Dampers and other special features can be furnished at extra cost. See "Optional Features at Extra Cost" on preceding page.

Streamline grilles are recommended for Standard Enclosures, and square mesh grilles for heavier gauge enclosures.

PEERLESS WALL RADIATORS

Peerless Wall Radiators are designed to give maximum heating results where space is limited, as in factories, shops, loft buildings, store-houses, garages, lobbies, corridors, stairways, bath rooms, etc.

These radiators are made in two styles, with provisions for numerous groupings; and may be assembled to meet any structural condition, fitting into restricted spaces of practically any size or shape, under windows or between them, on walls, ceilings or in skylights.

Peerless Wall Radiators should *always be assembled with bars vertical* for greatest efficiency.

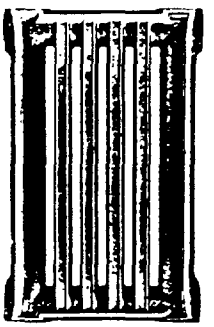

No. 8-B

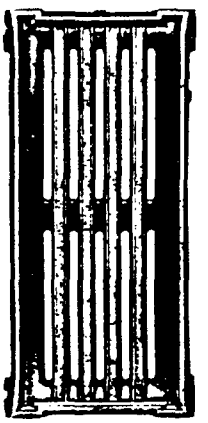

No. 11-B

RATINGS

Type	Square Feet Per Section
8-B	8
11-B	11

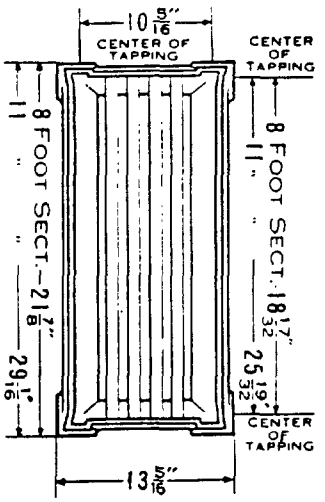

MEASUREMENTS

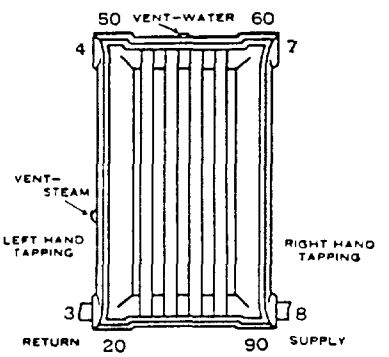

TAPPINGS — Regular tappings are indicated by Nos. 3, 4, 7 and 8. Special tappings as indicated by Nos. 20, 50, 60 and 90 are available at extra charge.

THICKNESS OF SECTION — 3⅛ IN.

SHIPPING DATA AND SPECIFICATIONS

For convenience in handling and shipping, Nos. 8-B and 11-B Radiators will be shipped in lengths not exceeding 4 sections.

For an assembly of more sections, or any different arrangement of sections, right and left threaded nipples with hexagon nut at center are provided, for easily connecting the stacks or rows on the job.

Tappings: 1½″ supply and return and bushed as desired. **Connections:** 1½″ right and left threaded internal nipples. These nipples have two heavy inside lugs, so that nipple can be unscrewed by inserting a piece of one inch round iron, flattened at one end to engage the lugs, and turned with a wrench.

If assemblages shown on next page are required, order by figure number. Spacing Saddles and Connecting Nipples are furnished for these assemblages at no extra cost. For assemblages not illustrated it is necessary to submit sketch of exact assembly required. Peerless Wall Radiators can be assembled in any practical number and arrangement of sections.

For data on Peerless Radiator Brackets see pages 91, 92 and 93.

21053

PEERLESS WALL RADIATOR

ASSEMBLAGES

Key to Figure Numbering

The first numeral in each of the following Figure Numbers indicates the size of section, thus: Figure 817 means 8 foot sections arranged in the manner as shown in sketch above the number; and Figure 1117 refers to 11 foot sections and to the same assemblage.

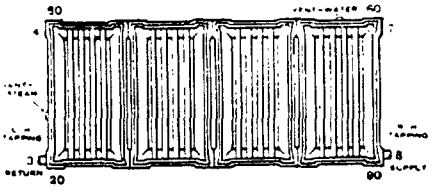

FIGURE 817 or 1117
Sections assembled in 4 sections in single tiers. Steam or Water.

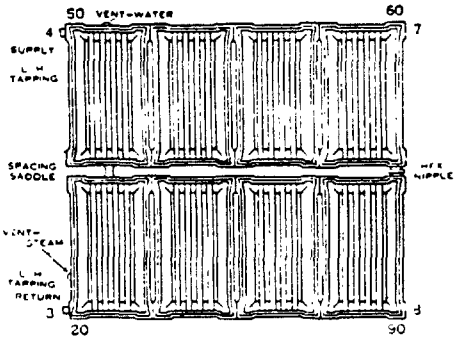

FIGURE 840 or 1140
Sections assembled in 8 sections in two tiers. Steam or Water.

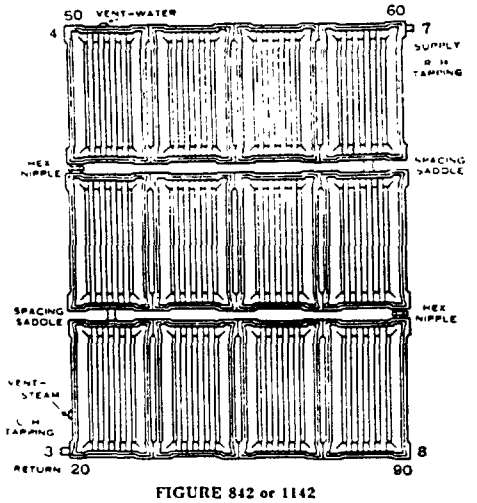

FIGURE 842 or 1142
Sections assembled in 12 sections in three tiers. Steam or Water.

Note: Always indicate point at which tappings are required.
For Peerless Spacing Saddle see page 92.

21054

PEERLESS BATHROOM RADIATOR

The Peerless Bathroom Radiator is designed especially for heating modern bathrooms, such as are found in hotels, apartments, etc. The space available for radiation in such rooms is so limited that the Peerless Bathroom Radiator fills a long felt need. This efficient radiator is easily fastened to the wall under the lavatory by simple lag screws or hooks. When harmoniously enameled its appearance is most pleasing.

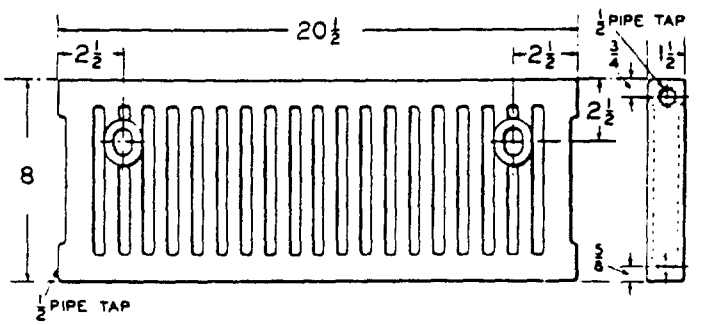

Rating, 4.5 square feet. Wall Area, 1.15 square feet.
Two ½″ Tappings.

AIR VALVE TAPPINGS

Radiator air valve tappings used for one-pipe steam and hot water systems are regularly made ⅛″.

THREADS OF TAPPINGS

Unless otherwise ordered, all tappings of Direct Radiators will have right-hand threads (except that of wall radiators where tapped 1½″, in which case tapping at one end is right-hand and left-hand on other end). 1″ top and 1¼″ bottom tapping for 3, 4 and 5-Tube Arco, and 1¼″ top and 1½″ bottom tapping for 6-Tube Arco radiation. Wall Radiators are tapped 1½″ for the supply and return. For further details see Peerless Wall Radiator pages. Radiators will be bushed in accordance with customers' specifications.

21055

RATINGS

RADIATORS AND CONVECTORS

HOW TO DETERMINE SIZE OF RADIATORS AND CONVECTORS FOR HOT WATER SYSTEMS

From table below select the heat emission for the average water temperature to be used. Divide the Btu heat loss of room by this heat emission. This gives the rating in sq. ft. of the radiator or convector required.

EXAMPLES

Assume 6000 Btu per hour as the heat loss of a room and 190°F. as the average temperature of the water in the radiator or convector.

For ARCO or PEERLESS WALL RADIATORS the heat emission for 190°F. average water temperature is 190 Btu per hour per sq. ft. Dividing 6000 by 190 gives 31.6 sq. ft. Refer to pages 57 and 86 and select radiator, having the dimensions desired, as near this rating as possible.

For SUNRAD RADIATORS the heat emission for 190°F. average water temperature is 180 Btu per hour per sq. ft. Dividing 6000 by 180 gives 33.3 sq. ft. Refer to page 58 and select radiator, having the dimensions desired, as near this rating as possible.

For ARCO CAST IRON CONVECTORS the heat emission for 190°F. average water temperature is 182 Btu per hour per sq. ft. Dividing 6000 by 182 gives 33 sq. ft. Refer to pages 67 and 68 and select convector, having the dimensions and enclosure height desired, as near this rating as possible.

For ARCO MULTIFIN CONVECTORS on forced circulation the heat emission for 190°F. average water temperature is 166 Btu per hour per sq. ft. Dividing 6000 by 166 gives 36.1 sq. ft. Refer to page 70 and select convector, having the dimensions and enclosure height desired, as near this rating as possible.

For ARCO MULTIFIN CONVECTORS on gravity circulation the heat emission for 190°F. average water temperature is 151 Btu per hour per sq. ft. Dividing 6000 by 151 gives 39.7 sq. ft. Refer to page 70 and select convector, having the dimensions and enclosure height desired, as near this rating as possible.

TABLE OF HEAT EMISSIONS FOR VARIOUS AVERAGE HOT WATER TEMPERATURES

Average Water Temperature in Radiators or Convectors	Heat Emission in Btu per Sq. Ft. Catalogue Rating				
				Arco Multifin Convector	
	Arco	Sunrad	Arco Cast Iron Convector	Forced Circulation 10° Temperature Drop	Gravity Circulation 20° Temperature Drop
230	275	245	258	238	216
220	250	230	239	219	200
215	240	220	229	210	192
210	230	210	219	201	183
200	210	195	200	184	167
190	190	180	182	166	151
180	170	160	164	149	135
170	150	145	145	132	120
160	130	128	126	116	106
150	110	112	109	99	90

21056

RADIATOR PEDESTALS



Pedestals to fit under legs of all styles and heights of any Arco Radiator can be furnished in the following heights: ½, 1, and 1½ inches.

ARCO RADIATOR BRACKETS

DIMENSIONS AND DATA

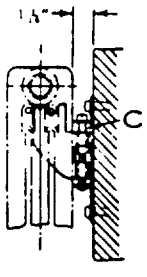

3-TUBE

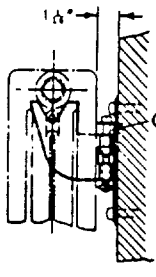

4-TUBE

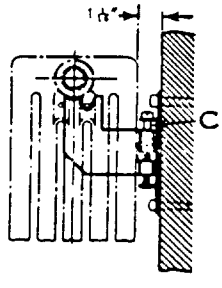

5-TUBE

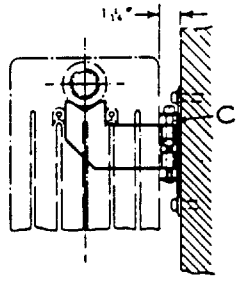

6-TUBE

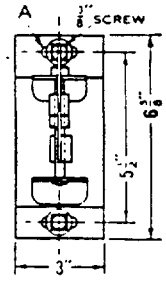

Front Elevation Bracket and Wall Plate

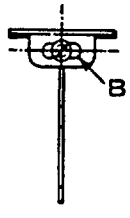

Top View—Bracket and Wall Plate

A ¾" ADJUSTMENT ON WALL

B ¾" ADJUSTMENT OF BRACKET

C ¾" VERTICAL ADJUSTMENT

Note: Arco Radiator Brackets consist of one Bracket and one Wall Plate. For all radiators up to and including 28 sections, 2 Brackets are sufficient. From 30 to 50 sections, 3 Brackets are necessary, one in center and one close to each end. In no case should maximum spacing between brackets be more than 42 inches.

21057

SUNRAD RADIATOR BRACKETS

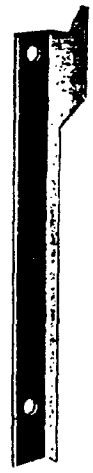

SUNRAD BRACKET

DETAILS OF BRACKETS

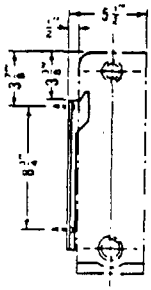

BRACKET For 5" Width

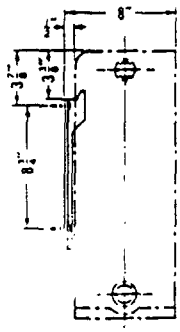

BRACKET For 7½" Widths

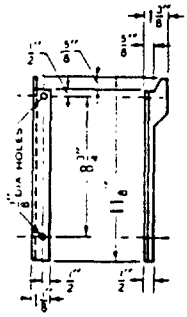

For 5 and 7½" Widths

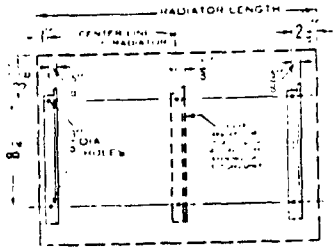

PEERLESS ADJUSTABLE WALL RADIATOR BRACKETS

BEARING PLATE DIMENSIONS

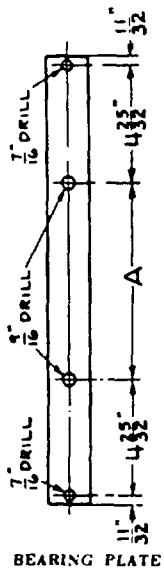

BEARING PLATE

Bearing Plates are first fastened to the wall after which Peerless Adjustable Wall Radiator Brackets are fastened to the Bearing Plates.

No. 3 Bearing Plate for 8-B Peerless Wall Radiators in assemblages not requiring split plates.

No. 4 Bearing Plate for 11-B Peerless Wall Radiators in assemblages not requiring split plates.

Dimension A

13¾" for No. 3 plate
20⅞" for No. 4 plate

SPLIT BEARING PLATE

For 8-B and 11-B Peerless Wall Radiators in assemblages such as Figures No. 840, No. 1140, No. 842 and No. 1142, — or other special assemblages.

Note: Dimensions of Bearing Plates for double row assemblages will be supplied on application.

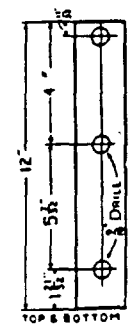

SPLIT BEARING PLATE
Top and bottom plates are identical

21058

PEERLESS ADJUSTABLE WALL RADIATOR BRACKETS

FOR PEERLESS WALL RADIATORS



Single Spool Bracket For Single Row of Radiation

REGULAR BRACKETS

By use of these brackets, which permit vertical adjustment of 2 inches, the fitter can adjust for "pitch" after they have been attached to the wall. The brackets set the outer face of the radiator 4¾ inches from the wall.

The spools on the bottom bracket allow a free horizontal movement of the radiators, thus taking care of any difference in "roughing-in" measurements, and afford free-play for expansion and contraction. The V-shape formed by the divided spool fits the edges of Peerless Wall sections, thus keeping them securely in place.

The malleable iron finger of the top bracket is set at its highest point and then screwed down to the radiator, merely guiding it and keeping it from tipping forward.

On **Special Order** Double Spool Brackets are available to carry two rows of radiation 1¼ inch apart.



Double Spool Bracket For Double Row of Radiation

Made for ALL Runs of Wall Radiators

When ordering state whether for use with S-B or H-B sections Also give figure number or sketch of assemblage.

PEERLESS WALL RADIATOR SPACING SADDLE

Furnished between sections in assemblages of Peerless Wall Radiators, similar to figure at right. Saves using extra brackets. Furnished without charge.

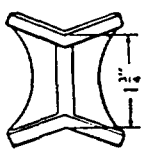

The following table indicates how many and where to place Peerless Adjustable Wall Radiator Brackets on single row radiators of different assemblages.

No. of Sections	No. of Brackets	Locate on Sections (Left to Right)	No. of Sections	No. of Brackets	Locate on Sections (Left to Right)
5	2	1 and 5	23 and 24	3	3, 12, and 3rd from last
6 to 9	2	2 and 2nd from last	25	4	3, 10, 16, and 3rd " "
10 to 14	2	3 and 3rd " "	26	4	3, 10, 17, and 3rd " "
15 and 16	3	3, 8, and 3rd " "	27	4	3, 10, 18, and 3rd " "
17 and 18	3	3, 9, and 3rd " "	28	4	3, 11, 18, and 3rd " "
19 and 20	3	3, 10, and 3rd " "	29	4	3, 11, 19, and 3rd " "
21 and 22	3	3, 11, and 3rd " "	30	4	3, 11, 20, and 3rd " "

PEERLESS ADJUSTABLE WALL RADIATOR BRACKETS

FOR PEERLESS WALL RADIATORS

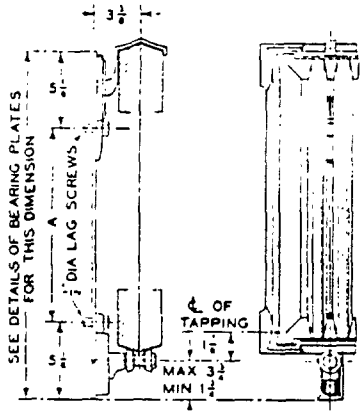

Fig. 1

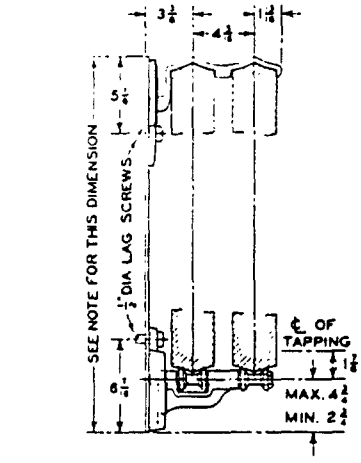

Fig. 3

Figs. 1, 2 and 3 show construction details and measurements of Arco Adjustable Wall Brackets.

Fig. 1 illustrates Bracket for a single row of Peerless Wall Radiators.

Fig. 2 illustrates appearance of either Bracket when supporting Peerless Wall Radiators.

Fig. 3 illustrates Bracket for double row of Peerless Wall Radiators.

PEERLESS WALL AND CEILING BRACKETS

FOR PEERLESS WALL RADIATORS



L MM M P

Brackets "L," "MM," and "M:" Screwed to wall, baseboard or wainscoting. "L" Brackets are bottom supports for all sizes of Wall Radiators. "MM" and "M" Brackets are top-guides to hold radiator in place. "L" and "MM" Brackets are concealed, "M" Brackets are not. One "MM" or "M" Bracket should always be provided for use with each "L" Bracket. "L" and "MM" Brackets are slotted for four, and the "M" Bracket for two wood screws — not furnished by us. With each "MM" Bracket we furnish one ¼" stove bolt and one button.

Ceiling Bracket "P:" Made of cast plate, 3½" diameter and screwed to ceiling joists by four screws — not furnished by us. The bolt furnished gives a distance of 3½" to 5" from bottom of Radiator to ceiling. Other lengths can be furnished on special order.

Note: In ordering buttons and stove bolts separately, state for which bracket, because of different lengths of bolts.

21060

RADIATOR VALVES

ROUGHING IN DIMENSIONS

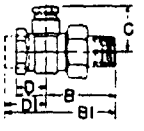

Nos. 134 & 231

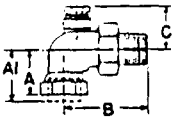

Nos. 132, 133, 232 & 233

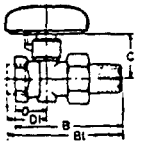

Nos. 117 & 217

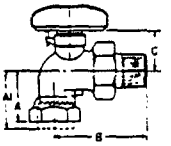

Nos. 116 & 216

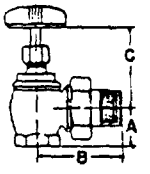

Nos. 72, 994, 995, 999, 101, 102, 901 & 902

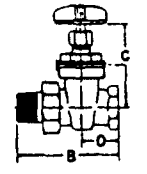

Nos. 57, 373, 949 & 993

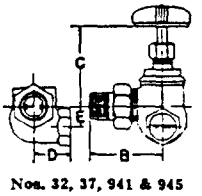

Nos. 32, 37, 941 & 945

Stock No.	Dimension	SIZE — INCHES						
		⅜"	½"	¾"	1"	1¼"	1½"	2"
134	B	3	3	3 1/16	4 1/16			
	B1	3 1/16	3 1/16	3 1/16	4 1/16			
	C	1 5/16	1 5/16	1 5/16	1 3/4			
231	D	7/8	7/8	1	1 3/4			
	D1	1	1 1/8	1 1/8	1 7/16			
132	A		1 11/16	1 11/16	1 11/16	1 15/16	2 5/16	
	B		2 3/8	2 5/8	3 1/16	3 7/16	3 7/8	
232	A1	1 3/4	1 3/4	1 3/4				
	B	2 3/8	2 3/8	2 5/8				
133	A	1 3/4	1 3/4	1 1/2	1 5/16			
	A1	1 7/8	1 3/4	1 3/4	2			
233	B	2 1/2	2 1/2	2 3/4	3 1/16			
	C	1 5/16	1 5/16	1 5/16	1 3/4			
117	B		3 1/16	3 1/16				
	C		1 5/8	1 7/8				
	D		5/8	1				
217	B1	3 1/16	3 1/16	3 1/16	4 1/16			
	C	1 7/8	1 5/8	1 7/8	1 11/16			
	D1	1	1 1/8	1 1/8	1 7/16			
116	A		1 5/8	1 7/8	1 7/8			
	B		2 1/2	2 3/4	3 1/16			
	C		1 7/16	1 5/8	1 11/16			
216	A1	1 11/16	1 11/16	1 11/16	2			
	B	2 11/16	2 7/16	2 3/4	3 1/16			
	C	1 7/16	1 7/16	1 7/16	1 11/32			
72	A		1	1 1/4	1 5/8	1 5/8	1 13/16	2 5/16
	B		2 5/16	2 5/8	3	3 1/16	3 5/8	4 5/16
	C		2 1/4	2 5/16	2 1/16	2 3/4	3 1/16	3 15/16
995	A		1 1/16	1 1/4	1 5/8	1 5/8	1 13/16	
999	B		2 1/4	2 5/16	3	3 1/16	3 7/16	
	C		2 1/16	2 1/4	2 1/2	2 15/16	3 1/16	
101	A		1	1 1/4	1 5/8	1 5/8	1 13/16	
	B		2 5/16	2 5/8	3	3 5/8	3 7/8	
	C		1 31/32	2 1/16	2 11/16	2 17/32	2 11/16	
102	A		1	1 1/4				
	B		2 5/16	2 5/8				
	C		1 31/32	2 1/16				
901	A		1	1 1/4	1 5/8	1 5/8	1 13/16	
	B		2 5/16	2 5/8	3	3 5/8	3 7/8	
	C		1 27/32	1 31/32	2 1/16	2 11/32	2 11/16	
902	A		1	1 1/4				
	B		2 5/16	2 5/8				
	C		1 27/32	1 31/32				
57	B		3 5/16	3 11/16	4 11/16	5 1/16	5 3/8	
	C		3	3 5/16	3 1/2	3 11/16	4 5/16	
	D		1 5/16	1 5/16	1 5/8	1 11/16	2	
373	B		3 5/16	3 5/8	4 1/16	4 5/16	5	
	C		3 11/16	4 1/16	4 1/2	5 1/16	5 3/16	
	D		1 5/16	1 5/16	1 5/8	1 3/4	1 7/8	
949	B		3 5/16	3 11/16	4 11/16	5 1/16	5 3/8	
	C		3 1/16	3 5/16	3 5/16	4 1/16	4 1/2	
	D		1 5/16	1 5/16	1 5/8	1 11/16	2	
993	B		3 5/16	3 5/16	4 1/16	4 5/16	5	
	C		3 11/16	4 1/16	4 5/16	5 1/16	5 13/16	
	D		1 5/16	1 5/16	1 5/8	1 3/4	1 7/8	
32	B		2 5/16	2 11/16	3 5/16	3 5/16	3 7/8	
	C		2 1/2	2 5/16	3 1/16	3 1/16	3 7/16	
37	D		1 5/16	1 5/16	1 5/16	1 7/8	2 5/16	
	E		4 1/16	4 5/16	4 5/8	4 15/16	5 1/16	
941	B		2 5/16	2 11/16	3 5/16	3 5/16	3 7/8	
	C		2 1/2	2 5/16	3 1/16	3 1/16	3 7/16	
945	D		1 5/16	1 5/16	1 5/16	1 7/8	2 5/16	
	E		4 1/16	4 5/16	4 5/8	4 15/16	5 1/16	

21061

SELECTION CHART

Showing Application of Radiator Valves, Elbows, Balancing Elbows and Straightway Fittings

PACKLESS TYPE	PACKED TYPE
FOR ONE AND TWO-PIPE STEAM HEATING SYSTEMS	
No. 999 Angle Valve	No. 72 Angle Valve
No. 941 Left Hand Corner Valve	No. 37 Left Hand Corner Valve
No. 945 Right Hand Corner Valve	No. 32 Right Hand Corner Valve
No. 993 Gate Valve	No. 373 Gate Valve
*No. 949 Globe Valve	*No. 57 Glove Valve
*To be used on one pipe jobs only when Valve can be installed with body in a vertical position.	
FOR FORCED CIRCULATION HOT WATER HEATING SYSTEMS	
No. 902 Angle Valve	No. 102 Angle Valve
	No. 132 Union Elbow
	No. 116 Angle Valve
	No. 117 Straightway Valve
	No. 216 Angle Valve
	No. 217 Straightway Valve
	No. 133 Balancing Elbow
	No. 134 Balancing Straightway Fitting
	No. 232 Union Elbow
	No. 233 Balancing Elbow
	No. 234 Balancing Straightway Fitting
Any of the Steam Valves listed for One and Two-Pipe Steam Heating Systems can be drilled for proper size drip hole and used on Forced Hot Water Heating Systems.	
FOR GRAVITY CIRCULATION HOT WATER HEATING SYSTEMS	
No. 901 Angle Valve	No. 101 Angle Valve
	No. 132 Union Elbow
	No. 232 Union Elbow
Any of the Steam Valves listed for One and Two-Pipe Steam Heating Systems can be drilled for proper size drip hole and used on Gravity Hot Water Heating Systems.	
FOR TWO-PIPE VAPOR-VACUUM HEATING SYSTEMS	
No. 995 Angle Valve	
FOR CONVECTORS USED ON STEAM HEATING SYSTEMS	
No. 993 Gate Valve with Bonnet and Upper Works loosely assembled to Valve Body.	No. 373 Gate Valve with Bonnet and Upper Works loosely assembled to Valve Body.
FOR CONVECTORS USED ON FORCED CIRCULATION HOT WATER HEATING SYSTEMS	
No. 993 Gate Valve with Bonnet and Upper Works loosely assembled to Valve Body and drilled for proper size drip hole.	No. 373 Gate Valve with Bonnet and Upper Works loosely assembled to Valve Body and drilled for proper size drip hole.
	No. 117 Straightway Valve
	No. 217 Straightway Valve
	No. 134 Straightway Fitting
	No. 234 Straightway Fitting
FOR CONVECTORS USED ON GRAVITY CIRCULATION HOT WATER HEATING SYSTEMS	
No. 993 Gate Valve with Bonnet and Upper Works loosely assembled to Valve Body and drilled for proper size drip hole.	No. 373 Gate Valve with Bonnet and Upper Works loosely assembled to Valve Body and drilled for proper size drip hole.

21062

CAPACITIES AND DIMENSIONS

EXCELSO INDIRECT WATER HEATERS (Stock No. 740)

	SIZE No.	Capacities — Gallons in 3 Hours Heated from 40° to 110°. Heater Below Water Line Boiler Water at 212°	Heater with Boiler Water at 180°	Heater in Live Steam 0 Lbs. Pressure	Length In.	Width In.	Diam. In.	Shell Openings No. and Size In.	Coil Openings In.	C. to C. Coil Openings In.
Single Coil	10	30	....	40	8¾	5¼	....	2-1	¾	5½
	011	30	....	50	9¾	5¼	....	2-1	¾	6⅛
	012	40	....	75	11¾	5¼	....	2-1	¾	8⅛
	012A	52	30	100	14¼	5¼	....	4-1	¼	11¾
	13	66	40	125	11¾	....	6½	2-1½	1	7¾
	14	82	52	160	15½	....	6½	2-1½	1	11¾
	14A	100	66	200	18¼	....	6½	2-1½	1	14
	15	120	82	225	19¼	....	6½	3-1½	1	15¼
	16	144	100	250	23½	....	6½	3-1½	1	19¼
Double Coil	25	160	120	300	12½	....	9	2-2	1½	6¼
	26	192	144	400	15	....	9	2-2	1½	8⅛
	27	300	160	600	19	....	9	3-2	1½	13¼
	28	400	192	750	23¼	....	9	3-2	1½	17¾
Triple Coil	34	500	300	900	18¼	....	13¾	3-3	2½	12½
	35	600	400	1200	21	....	13¾	3-3	2½	13¾
	36	800	500	1500	25	....	13¾	3-3	2½	17¾
	37	1000	600	1750	29	....	13¾	3-3	2½	21½
Dual Coil	42	1200	1000	2000	21½	26	13¾	3-4	3	13¾
	44	1600	1200	2500	25¼	26	13¾	3-4	3	17¾
	46	2000	1600	3000	29¼	26	13¾	3-4	3	21½
	48	2500	2000	4000	35¼	26	13¾	3-4	3	27½

HOT WATER RADIATOR HEATING CAPACITIES — SQUARE FEET

Size of Heater	10	011	012	012A	13	14	14A	15	16	25	26	27	28	34	35	36	37	42	44	46	48
*Below Water Line	20	30	40	45	55	80	90	100	120	130	150	250	330	400	500	650	800	1000	1100	1300	1600
†Live Steam	40	50	60	70	85	120	140	160	180	200	250	400	500	600	800	1000	1200	1500	1750	2000	2500

*Below water line capacities based on 120° heater inlet temperature and 160° outlet temperature. Boiler water temperature 212°.

†Steam capacities based on 140° heater inlet temperature and 160° outlet temperature.

Steam at 0 lbs. gauge pressure. For capacities with higher steam pressures, multiply above ratings by correct factor in steam conversion table below.

STEAM CONVERSION TABLE

Steam Pressure, Lbs.	0	2	5	10	15	20	25	30	40	50	75	100
Factor	1.	1.1	1.2	1.3	1.4	1.5	1.6	1.7	1.8	2.	2.2	2.6

EXCELSO DIRECT PHAETON WATER HEATERS (Stock No. 741)

Size	Gallons Tank Capacity	Hot Water Rad. Cap. Sq. Ft.	Diameter Inches	Height Inches	Size of Tappings Inches	C. to C. Side Outlet Inches
6"	30	40	6	3½	1	2½
8"	45	75	8	4½	1	2½
10"	80	100	10	5¼	1½	3
12"	100	150	12	6	2	3½
15"	150	250	15	7	2½	4½
18"	250	400	18	8	3	5½

EXCELSO DIRECT FIN PIN WATER HEATERS (Stock No. 743)

Size	Gallons Tank Capacity	Size of Tappings Inches	Overall Dimensions Inches	C. to C. of Tappings Inches
No. 30	30	1	12 x 4 x 2	2½-5¾-9
No. 40	40	1	12 x 5 x 2	2½-5¾-9

EXCELSO DIRECT FIRE POT GENERATORS (Stock No. 742)

No. 1	Up to 40	1	6½ x 10 x 5	2½
No. 2	Up to 60	1	8½ x 10 x 8	2½-5½