General Offices

March 9, 1960

PYDRAUL A-200

J. H. Orem - Detroit
D. F. Smith - GO

Mr. J. Glenn Hicks
Detroit Sales Office

By telephone last week, Dale Smith asked me to forward toxicity information to you on Pydraul A-200. This was to be forwarded or transmitted to a potential customer. I lost my note as to the name of the customer involved and Dale's copy has been "lost" in the files. Dale and I are sure, however, that you will remember for whom the information was requested.

Attached is data which I hope will be satisfactory.

Elmer P. Wheeler

EPW:dh
Attachment

TRAN 055413

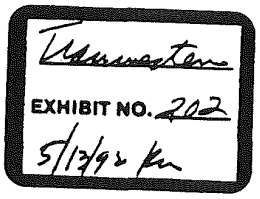

WATER_PCB-SD0000077680

TOXICITY AND SAFE HANDLING OF PYDRAUL A-200

Animal toxicity studies with this product have indicated that the oral lethal dose (LD_{50}) to rats is 10,500 milligrams per kilogram. The lethal dose when the material was applied undiluted to the unbroken skin of rabbits is approximately 1250 milligrams per kilogram.

We conclude from the above that accidental ingestion on the part of humans is not a particular hazard in view of the high oral lethal dose in rats. Similarly, single massive skin exposures should not be immediately hazardous. The lethal dose obtained in skin penetration studies is such, however, that prolonged and repeated skin contact should be avoided because of possible systemic effects. In addition, prolonged and repeated skin contact may lead to skin irritation.

We also feel that vapor inhalation should be avoided when the fluid is heated to elevated temperatures. Such exposure again relates to prolonged or repated exposures rather than short-term massive or acute exposures. In the case of the latter, workmen would not voluntarily expose themselves to concentrations that are hazardous because of irritation of the respiratory tract.

The use of Pydraul A-200 in industrial hydraulic fluid applications should not present toxicity hazards during the transfer of the fluid from original containers to the hydraulic system. Obviously when the fluid is within the hydraulic system, there should be no exposure and consequently, no hazard. In the event of rupture of hydraulic lines and subsequent splashing or spraying of the fluid on the heated surfaces, vapors of the fluid and possible decomposition products (depending on the temperature of the heated surface) may be irritating if inhaled to the degree that workmen will not voluntarily expose themselves to toxic concentrations. No hazardous exposure should result during the interval required to shut down the system and obtain suitable respiratory protective devices during repairs to the system.

WATER_PCB-SD0000077681

Saint Louis 66, Missouri

April 15, 1960

PYDRAUL FLUIDS

625

Mr. Dale F. Smith
St. Louis

Attached are six copies of summaries and toxicity data on a number of our Pydraul fluids. I believe that this is the best we can provide insofar as general discussions are concerned. If you find that more specific data is necessary as you visit the European contacts, let us know or suggest that they write to us directly.

Elmer P. Wheeler

EPW:ph
Enclosures

4/20/60 - Mr. A. T. Hinson called and said that Dale Smith requested a dozen more copies of the above. Sent them to Mr. Hinson so that he could send them to Mr. Smith in Europe.

dh

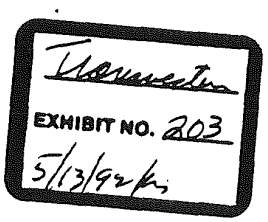

-TRAN 055368

WATER_PCB-SD0000077682

bc: Mr. Dale Smith

January 15, 1961

Mr. John Van Amsterdam
Product Engineer
R. S. Phelon Inc.
East Long Meadow, Massachusetts

Dear Mr. Van Amsterdam:

Mr. Pastorino has requested us to send toxicity information on our product Pydraul A-200. The data and safe handling suggestions are summarized in the attached sheet.

If we can be of any further assistance, please let me know.

Very truly yours,

Elmer P. Wheeler
Assistant Director
Medical Department

EPW:sg
Enclosure
cc: Mr. R. G. Pastorino
Monsanto Chemical Company
Everett, Massachusetts

COMPANY CONFIDENTIAL

TRAN 055430

Transwestern
EXHIBIT NO. 209
5/13/92 kw

WATER_PCB-SD0000077683

From the desk of
D. P. SMITH

JUN 30 REC'D

Elmer -

Would you please take care of the request to my attention about Pyranol AC toxicity. Please send to John Hooper (circled) with BCC to Morlock & Conwell - Houston

Thanks

Dale

TRAN - 020647

Transwestern
EXHIBIT NO. 205
5/13/92 KS

September 25, 1961

Mr. George Otto
Maytag Company
Newton, Iowa

Dear Mr. Otto:

Our Mr. Dale Smith has asked us to write you concerning the toxicity and safe handling of our product Pydraul A-200.

We have prepared a brief summary of the toxicity work carried out on this material, which indicates that it is not a serious handling hazard. A copy of the summary is enclosed.

If you have any additional questions after reviewing the attachment, please let me know.

Very truly yours,

Elmer P. Wheeler
Assistant Director
Medical Department

EPW:dh
Enclosure

cc Mr. Dale F. Smith
Monsanto Chemical Company
800 North Lindbergh Boulevard
St. Louis 66, Missouri

COMPANY
CONFIDENTIAL

TRAN 055436

Transwestern
EXHIBIT NO. 206
5/13/92

9/29/61

TO: MR. WHEELER

RE: Telephone call today from Dale Smith

A call report from Joe Crawford reads:

"Please correspond with English regarding the use of Pydraul AC in compressors supplying air for breathing purposes. If you would provide him with information which would dispel any concern about toxicity, he would no doubt circulate this information to field personnel."

Please write to:

Mr. John E. English
Engineering Department
Pan American Petroleum Corporation
511 South Boston Avenue
Tulsa, Oklahoma

Send bcc to:

Joe S. Crawford - GO
A. D. Evans - GO
D. F. Smith - GO

MR. Wheeler - Is the attached letter okay to send? Yup! E

TRAN 020656

Transwestern
EXHIBIT NO. 207
5/13/92 KR

WATER_PCB-SD0000077686

BCC J. S. Crawford - Y
A. D. Evans - G
D. F. Smith - G

October 2, 1961

Mr. John E. English
Engineering Department
Pan American Petroleum Corporation
511 South Boston Avenue
Tulsa, Oklahoma

Dear Mr. English:

Our Mr. Joe Crawford has asked me to send you toxicity and safe handling information for our product Pydraul AC.

Animal toxicity screening studies with Pydraul AC indicate that the oral lethal dose to rats is greater than 52.0 grams per kilogram. In the case of rabbits, the minimum lethal dose was found to be 3.5 to 4.5 grams per kilogram. The difference in toxicity to various animal species is not unusual in the case of our hydraulic fluids. Based on the lethal dose in rabbits, we conclude that Pydraul AC may be considered only "slightly toxic" from the standpoint of accidental ingestion of single doses.

When applied to the unbroken skin of rabbits, the skin penetration lethal dose was found to be between 4.0 to 5.0 grams per kilogram. Again, this indicates a relatively low order of toxicity in terms of accidental exposure to large areas of the skin surface. Skin and eye irritation potential studies in animals indicate that irritation is not a serious hazard. We do recommend, however, that prolonged and repeated skin contact be avoided. In relation to eye irritation, animal studies do not reflect the pain which has been reported when the fluid has accidentally splashed in the eyes of workers. Significant pain and moderate irritation have resulted in the case of such accidents. As would be predicted from experience in animals, no permanent damage to eye tissues or to sight has resulted.

Rats survived six hours' continuous exposure to an atmosphere saturated with vapors of Pydraul AC. This indicates that accidental exposure to massive vapor concentrations presents no serious acute hazard.

COMPANY CONFIDENTIAL

TRAN 020654

Transwestern
EXHIBIT NO. 208
5/13/92 kg

WATER_PCB-SD0000077687

We believe that any Pydraul AC carried over in compressed air or gases presents no significant toxicity hazard to humans breathing the air or gas. The limited series of samples taken from a compressed air line used for such purposes indicated that no measurable quantities of the components of the fluid were present. Certainly, single or limited repeated inhalation exposures cause no effect in industrial uses of compressed air where workers are provided with protective air-supplied respiratory equipment. Any Pydraul AC vapors in concentrations to be toxicologically significant would be objectionable from the standpoint of odor. Even these concentrations would not be significant in terms of possible toxic effects unless the workers were continuously exposed eight hours a day, week after week, during their working hours.

Where the compressed air is supplied to workmen through individual air-supplied respiratory masks, good industrial practice dictates that the system include an air line filter. Such a filter is available from the Mine Safety Appliances Company and will remove organic vapors, odors, oil, water mists and condensation from the compressed air.

If I can be of any further assistance, please let me know.

Very truly yours,

R. Emmet Kelly, M. D.
Medical Director

REK:dh

COMPANY CONFIDENTIAL

TRAN 020655

WATER_PCB-SD0000077688

FEB 5 1968

Feb 2, 1968

Elmer

Would you please write a letter to the men listed below telling him about the toxicity studies and data on Pydraul 312. Thanks much.

Hal Smith

Mr. Roy Reed
Director of Safety
General Motors Corporation
Chevrolet Division
Metal Fabricating Plant
2238 W. Bristol Road
Flint, Michigan

bcc: G.F. Fague Monsanto Detroit
J.R. Fallon "
R. Davis/R.A. Garcia/D.F. Smith - G.O.

Transmitter
EXHIBIT NO. 209
5/13/92 kg

COMPANY CONFIDENTIAL

TRAN 058083

WATER_PCB-SD0000077689

bcc: G. F. Fague - Monsanto Detroit
J. R. Fallon Monsanto Detroit
R. Davis/R. A. Garcia/D. F. Smith - G.(

February 13, 1968

Mr. Roy Reed
Director of Safety
General Motors Corporation
Chevrolet Division
Metal Fabricating Plant
2238 West Bristol Road
Flint, Michigan

Dear Mr. Reed:

Mr. Fague of Our Detroit office has asked me to forward toxicity and safe handling information on our fire resistant hydraulic fluid, Pydraul 312.

I have enclosed a copy of our bulletin entitled, "Toxicity and Safe Handling of Pydraul 312." In addition, I thought you might be interested in the more detailed data discussed below.

The oral toxicity of this product shows an LD_{50} to rats of 6500 mg/kg and it is classified as "practically non-toxic" from the acute oral point of view.

When applied to the skin undiluted and allowed to remain overnight, a barely perceptible redness occurred, giving a maximum score of 1.3/8.0, which was classed as a slight irritant. The material proved capable of being absorbed through the skin in high doses when allowed to remain on the rabbit under a cuff. The minimum lethal dose was somewhere over 2000 and under 3000 mg/kg. This would fall into the "slightly toxic" range.

The material is a slight eye irritant when applied undiluted to the rabbits' eyes and there was mild discomfort and slight redness. The maximum score was 13/110 and the eye had returned to normal within three days.

Rats survived six-hour inhalation exposure to the vapors evolved at ambient temperatures following the passage of air through the material. No systemic effects were noted.

Transwestern
EXHIBIT NO. 210
5/13/92 kn

COMPANY CONFIDENTIAL

TRAN 058084

WATER_PCB-SD0000077690

Clinically, we have had no cases of illness occurring in our employees during the manufacture and distribution of this material, nor have we had reports of injuries from the field.

However, there is no question but that a potential of injury could occur should the fumes involved at elevated temperatures be breathed for long periods of time or repeatedly. Likewise, the action of the material on the skin causes defatting but, even more so, repeated or continuous skin contact must be avoided to prevent absorption of the material with systemic effects. I repeat, however, these conditions have not come to my attention.

If you have any further questions, please write directly to me.

Sincerely,

R. Emmet Kelly, M. D.
Medical Director

REK:cjs

Enclosure

bcc: Vincent Castrop

P.S. I don't know if you have received any inquiries from Mr. Reed of your Chevrolet Division at Flint but thought you would be interested in the above letter which was sent to him following a telephone request from our Sales Department

Elmer P. Wheeler

COMPANY
CONFIDENTIAL

TRAN 058085

WATER_PCB-SD0000077691

September 19, 1961

Mr. D. R. McFee
Associate Industrial Hygienist
Argonne National Laboratory
9700 South Cass Avenue
Argonne, Illinois

Dear Mr. McFee:

Mr. Dale F. Smith has asked me to reply in part to your letter of September 12 requesting information concerning Pydraul AC.

I am sorry that we cannot disclose any additional information relative to the composition of this fluid.

Enclosed is a copy of a report indicating the results of range-finding toxicity studies with this fluid. We have not conducted or sponsored any chronic inhalation studies.

We recommend the use of this product in compressors which supply breathing air only if the air line system includes filters such as are available from Mine Safety Appliances or Pulmosan. I am sure you are familiar with such filters and good industrial hygiene practice dictates that such equipment should be used on compressed air, regardless of the lubricant used in the compressor.

Because of the low vapor pressure of the Pydraul AC components, there is little likelihood that any vapors will carry into the air lines. We cannot guarantee this, of course, since the types, degree of maintenance, temperature of operation, etc. vary so greatly from one compressor to the next. In limited sampling for us of the air supplied by a compressor in one of our plants which had used Pydraul AC for more than three years, no detectable concentrations of Pydraul AC components were picked up on filter paper or silica gel samplers. I would still recommend that the filters referred to above, which would

COMPANY
CONFIDENTIAL

TRAN 020652

Transwestern
EXHIBIT NO. 211
5/3/92 KR

WATER_PCB-SD0000077692

eliminate organic vapors, be incorporated in any system where the compressed air is to be fed to air line respirators.

Very truly yours,

Elmer P. Wheeler
Assistant Director
Medical Department

EPW:dh
Enclosure (Project No. Y-56-40 - 8/3/56)

cc Mr. Dale F. Smith
Monsanto Chemical Company
800 North Lindbergh Blvd.
St. Louis 66, Missouri

COMPANY CONFIDENTIAL

TRAN 020653

WATER_PCB-SD0000077693

February 3, 1967

Mr. W. T. Grieve
Department of Health
Norquay Building
401 York Avenue,
Winnipeg 1, Canada

Dear Mr. Grieve:

Enclosed is a sheet summarizing the toxicity and safe handling information for our hydraulic fluid, Pydraul 150. I trust that this will answer your questions relative to possible hazards in the use of this product. This fluid is one which has been developed in conjunction with another company and we are not at liberty to reveal its composition other than in the general terms indicated in the enclosure.

Very truly yours,

R. Emmet Kelly, M.D.
Medical Director

EPW/ REK:cjs

Enclosure

From the desk of

ELMER P. WHEELER

A copy of this correspondence was sent to T. W. Oneson, Montreal, at the request of Mr. Dale Smith, 4/26/67

mah

TRAN 056726

Transwestern
EXHIBIT NO. 212
5/13/92 [illegible]

2-5

STEGEN
EX. 3
S.R. 12-3-92

ORGANIC CHEMICALS DIVISION RESEARCH Report

Special Report MS-LL-6918

CONFIDENTIAL
RESTRICT CIRCULATION

MCS 153
Transfer Report

Transfer to Organic Development

Job No. 4013

January 7, 1963 Written by: J. D. Sullivan

Monsanto

ST. LOUIS, MO.

TRAN 001300

Transwestern
EXHIBIT NO. 213
5/13/92 kg

WATER_PCB-SD0000077695

MONSANTO CHEMICAL COMPANY
ORGANIC CHEMICALS DIVISION
ST. LOUIS RESEARCH DEPARTMENT

Special Report No. 2918

CONFIDENTIAL
RESTRICT CIRCULATION

MCS 153
Transfer Report

Transfer to Organic Development

Job No. 4013

January 7, 1963 Written by: J. D. Sullivan

TRAN 001301

WATER_PCB-SD0000077696

DISTRIBUTION

1. File
2. K. L. McHugh
3. W. R. Richard, Jr.
4. Duplicate File
5. ~~Technical Reports Library~~ FILE
6. J. D. Sullivan
7. R. E. Hatton - Development Department
8. L. R. Stark
9. L. E. Klein - Development Department
10. Extra
11. Extra
12. Extra

This report contains confidential information which is the property of the Monsanto Chemical Company and which shall be disclosed only to duly authorized persons. The recipient is held accountable for the filing and safe custody of the report, which must be returned on demand.

WATER_PCB-SD0000077697

INDEX

		Page No.
A.	INTRODUCTION	1
B.	CHEMISTRY	2
	1. Degree of Polymerization	2
	2. Addition of Reactants	3
	a. Stepwise Polymerization	3
	b. Batchwise Polymerization	3
C.	PROPERTIES OF MCS 153	3
	1. Fluid Properties	3
	a. Viscosity	3
	b. Pour Point	3
	c. Viscosity Index Study	4
	2. Quality Tests	4
	3. Physical Properties	5
	a. Densities	5
	b. Specific Heat	5
	4. Electrical Properties	5
	a. Dielectric Constants	5
	b. Power Factor	5
	c. Specific Resistivity	5
	5. Flammability	6
	a. AIT	6
	b. Flash Point	6
	c. Fire Point	6
	d. High Pressure Spray Test	6
	e. Hot Manifold Test	6
	f. Molten Metal Ignition Test	6
	6. Lubricity	6
	a. Four-Ball Test	6
	b. Timken Wear Test	6
	c. Shear Stability	7
	7. Performance Tests	7
	a. Oxidation-Corrosion Test	7
	b. Foam Tests	8
	c. Rust Tests	8
	d. Emulsion Tests	8
	8. Heat Stability Tests	9
	9. Toxicity	9
	10. Patent Status	9

WATER_PCB-SD0000077698

A. INTRODUCTION

This report is an attempt to bring together in one place all of the pertinent technology on the preparation and use of MCS 153. The publication of this report will formally transfer the responsibility for this product from the Research Department to the Organic Development Department.

Although OS 81, Monsanto's synthetic steam turbine lubricant, has served as a suitable gas turbine fluid, the lower viscosity MCS 153 is desirable to facilitate start-ups at low temperatures. MCS 153 is a shear stable functional fluid having the following formulation:

Aroclor 1242	75.31%
Aroclor 1232	12.84%
Tricresyl phosphate (TCP)	10.00%
Poly(Oxybutylene-MDI) Diol (FH-139)	1.80%
N-Phenyl-α-Naphthylamine (PAN)	0.05%
DC-200 Silicone	50 ppm

FH-139 is a shear stable viscosity index improver prepared by the reaction of polyoxybutylene diol (B-2000) with methylene di-p-phenylene isocyanate (MDI). This is a "long sought after" development in functional fluid research and its utility may be visualized beyond the current gas-turbine application. Shear stability is imperative for hydraulic fluids of the Aroclor and the Pydraul series and would prove extremely advantageous in the Skydrol fluids used in the aircraft industry.

An intensive effort was made to design a shear stable viscosity index improver which did not cause emulsification when the formulation was mixed with water. Non-emulsifying fluids are not a requirement for the gas-turbine application but it is an important property for fluids which could be contaminated by water by mechanical failures such as in steam turbine or shipboard installations. Water washing, followed by dehydration, is becoming a popular method for recovering used hydraulic fluids and increasing emphasis is being placed on formulations which will not emulsify in contact with water.

Of the viscosity index improvers prepared and tested, the most effective polymers, which also gave non-emulsifying fluids upon formulation, were ones prepared from polybutylene glycols (B-2000) and MDI. However, this polymer (FH-139) prepared in the plant from production size lots of B-2000 and MDI caused the resulting MCS 153 formulation to emulsify in contact with water. This emulsifying tendency was traced definitely to a contaminant, other than moisture and free acid, in the polybutylene glycol. Purifying this diol by customary techniques, prior to polymerization, failed to give non-emulsifying formulations.

WATER_PCB-SD0000077699

2. Addition of Reactants

a. Stepwise Polymerization - In order to obtain the desired polymerization, the diol and MDI were added in definite increments to supply the required excesses of each reactant, for various time intervals, during the reaction period. Specifically, two moles of MDI were added to one mole of the diol to form a poly-oxyalkylene diisocyanate. This diisocyanate was reacted with two more moles of the diol to form a poly(oxyalkylene urethane) diol. The cycle was repeated until a polymeric diol, having an approximate molecular weight of 10,000, was obtained.

b. Batchwise Polymerization - If the total MDI and poly-glycol required were added at the same time in a single reaction mixture, the desired order of polymerization cannot be attained even with prolonged heating. Under these conditions, the molecular weight of the polymer did not reach its maximum and optimum viscosity index improvement of the resulting formulation was not obtained.

C. PROPERTIES OF MCS 153

1. Fluid Properties

Table I lists the pour point, along with the viscosities of MCS 153 at various temperatures. Similar results are listed for OS-81, Monsanto's current steam turbine lubricant, for comparative purposes.

Table I

		MCS 153	OS 31
a. Viscosity (cs)			
	at 20°F	3,681.0	200,000
	at 40°F	468.6	3,200
	at 60°F	120.0	-
	at 100°F	22.6	34
	at 130°F	10.7	-
	at 175°F	4.9	5.5
	at 210°F	3.2	3.1
b. Pour Point		0°F	+20°F

In Table 1c are listed viscosities of numerous formulations in which the shear stable viscosity index improver (FH-139) was added to various Monsanto base stock fluids.

WATER_PCB-SD0000077700

3. Physical Properties

The following table lists the densities of MCS 153 at various temperatures along with the specific heat of this fluid at 77°F.

a. Density

Temperature	Gm/ml
20°F	1.3663
60°F	1.3452
100°F	1.3247
210°F	1.2674

	MCS 153	OS 81
b. Specific Heat at 77°F, BTU/lb./°F	0.30	0.31

4. Electrical Properties

Table II lists dielectric constants, power factors and specific resistivities for MCS 153, OS 81, DTE Oil 797 and Cellulube 220.

Table II

	MCS 153	OS 81	DTE 797	Cell. 220
a. Dielectric Constant at 25°C				
at 60 cps	6.52	5.95	2.22	-
at 1000 cps	5.94	5.84	2.24	6.91
b. Power Factor (%) at 25°C				
at 60 cps	52.0	17.6	0	-
at 1000 cps	3.45	1.08	0	17.5
c. Specific Resistivity (ohm-cm)				
at 25°C	1.7×10^{10}	5.0×10^{10}	1.4×10^{13}	2.0×10^{9}
at 100°C	2.0×10	3.3×10	3.9×10	8.6×10

Dielectric constants and power factors were measured at 60 and 1000 cycles per second at room temperature (25°C). Specific resistivity measurements were made at 25°C and 100°C with a megohm bridge.

WATER_PCB-SD0000077701

c. Shear Stability

PH-139 in formulations of Aroclor and/or tricresyl phosphate are exceptionally shear stable. After twelve (12) passes through the Diesel Injector, the viscosity of the fluid is decreased by only 0.5%.

7. Performance Tests

a. Oxidation-Corrosion Test

For purposes of comparison, MCS 153 is compared to the 7808 type fluid specifications along with OS 81 and WS-3777, an Esso candidate for a 9236 type fluid. The following table lists the results of comparable oxidation and corrosion tests after a 72 hour retention time at 347°F per Mil-L-7808C.

	Viscosity Initial		Viscosity Change %		Acid	Metal Attack					Wt. Loss
	100	200	100	210	Change	Mg	Al	Fe	Cu	Ag	%
OS 81	34.5	3.15	17.9	1.9	0.14	.01	.03	.03	-.11	-.01	3.4
MCS 153	22.9	3.28	-4.9	-13.7	0.15	.02	.02	.02	-.34	-.10	8.1
WS-3777	52.3	10.4	-4.3	- 5.9	0.54	.02	.02	.03	-.02	.01	2.3
7808C	11.	3.	-5 to +15		2.0	±.2	±.2	±.2	±.4	±.2	-

No sludge or coking was observed in the MCS 153 formulation after the test was terminated.

The following table lists the results of oxidation-corrosion tests on MCS 153 and OS 81 at 250°F for 168 hours.

	OS 81	MCS 153
Metal Attack, Mg/cm:		
Mg	0	-0.01
Al	-0.01	-0.01
Fe	-0.01	0
Cu	-0.05	-0.04
CD/Fe	-0.04	-0.01
Viscosity:		
100°F Initial	34.51 cs.	22.55 cs.
100°F Final	35.48 cs.	24.71 cs.
% Change	+2.8	+9.6
210°F Initial	3.15 cs.	3.24
210°F Final	3.11 cs.	3.31
% Change	-1.3	+2.1

WATER_PCB-SD0000077702

8. Heat Stability

Laboratory tests showed that large molecular weight polymers (20,000 to 30,000) made from MDI and polyalkylene glycols degraded when heated for prolonged periods above 200°F. On the other hand, lower molecular weight (approximately 10,000) polymers are still effective viscosity index improvers and are more thermally stable. In addition to shear stability and non-emulsification, this thermal characteristic of the polymer was another reason for limiting the chain length of the PH-139 going into the MCS 153 formulation. Table III (see page 10) lists the changes in viscosity and acidity in MCS 153 and OS 81 after long retention times in a severe (static) oven test at 300°F.

It will be noted that the acid build-ups and viscosity increases were only moderate at temperatures well in excess of the operating temperatures of a gas turbine.

9. Toxicity

The toxicity of MCS 153 is unknown at present, but it is anticipated that this fluid will prove to be relatively non-toxic and non-irritating to the skin.

10. Patent Status

A disclosure (No. 2451) has been filed by the Organic Division to cover the use of polymers, made from polyglycols and diisocyanate, as shear stable, non-emulsifying viscosity index improvers for various fluid base stocks.

J. D. Sullivan

2-25-63

WATER_PCB-SD0000077703

WATER_PCB-SD0000077704

St. Louis - General Offices

September 10, 1965

Fire Resistant Hydraulic Fluids for Coal Mines
RDavis memo to M.McEwen of 9/8/65

TO R. Davis

cc C. R. Buchanan - CBUCH
M. McEwen
W. R. Richard - GRICHARD
D. F. Smith - DSMITH
L. R. Stark - LSTARK
E. P. Wheeler - EWHEELER

As I indicated the last time we discussed the subject of odor and toxicity of chlorinated hydrocarbons for coal mine applications, these characteristics have been considered and will be resolved in due time. The problems of getting a candidate fluid in a mine for a meaningful field test are many-fold, but we are making progress. There has to date been no serious alarm shown regarding toxicity of Pydraul 312 (first candidate) by anyone in the industry. Please, let's not jeopardize our chances of getting a field test underway by prematurely raising the question of toxicity to the industry. They can think of enough reasons on their own for not using fire-resistant fluids without any assist from Monsanto. As soon as field tests are underway, the Monsanto and "customer" medical departments will be asked to assist in evaluating toxicity in an actual mine situation. Such evaluations will be far more meaningful than simulative tests which could be conducted prior to field tests.

C. L. Early

/gt

MATTEW
EX. 17
S.R. 1-21-92

COMPANY CONFIDENTIAL

TRAN 056824

Transamerica
EXHIBIT NO. 214
5/13/92 Kay

214

WATER_PCB-SD0000077705

MONSANTO

FROM (NAME & LOCATION) W. R. Richard - Research Center

DATE : May 20, 1968

SUBJECT :

REFERENCE :

cc: D. Roush DROUS
S. Shaw SSHAW
D, Smith DSMIT
C. Early CEARL
R. Keller - JFQ
H. Bergen HBERG

TO : R. Davis - RDAVI

FF

We now have FDA inquiry for samples of Aroclor, presumably to look for ppm toxicity, and on residues in wildlife.

Are we preparing ourselves and customers to minimize or prevent process, stream and air pollution?

WRR

W. R. Richard

ms

Transwestern
EXHIBIT NO. 215
5/13/92 [illegible]

TRAN 058169

215

Medical Department, St. Louis

September 25, 1970

G. C. Alberini, Milan
D. S. Cameron, P.J.A. Marsh-Brux.
D. F. Smith, DSMIT
H. A. Vodden, Ruabon

J. N. Haggart
Brussels

I have enclosed a copy of our toxicity and safe handling statement covering Pydraul 312. You can provide this to Fiat.

This statement has no reference to the so-called ecological problems that have been alleged to Aroclor type compounds. We do suggest that you advise the customer to take every precaution possible to reclaim these fluids and prevent them from becoming environmental contaminants.

Jack T. Garrett

JTG:ju

Enclosure

COMPANY
CONFIDENTIAL

TRAN 062755

Transwestern
EXHIBIT NO. 216
5/13/92 Roy

cc: D. F. Smith-SL
D. F. Mayer
W. G. Morlock

Mary
Verifax
1 - Wood Martin 246
1 - Ralph Smith 246
1 - George Wunter.
Thanx
Don

March 21, 1962

Mr. R. F. Shields
Attala Oil Company
Post Office Box 69
Kosciusko, Mississippi

George, let me know of any word of this.

Dear Mr. Shields:

Since writing to you on March 12th, I have discussed your problem of Pydraul A-200, which you supplied to Texas Eastern, with Bill Morlock and our technical people in St. Louis. Bill Morlock indicated that Texas Eastern was experiencing some valve deposit and there certainly is no reason for us to say they are not when they indicate that they are; we admit that we have not had any extensive experience in using Pydraul A-200 as an air compressor lubricant.

In order to avoid any further difficulties, we will be glad to have you return any unused drums to the attention of D. F. Mayer, Monsanto Chemical Company, W. G. Krummrich Plant, Monsanto, Illinois, freight collect.

To facilitate this exchange, will you advise us immediately how may drums you are returning and we will send you a replacement shipment of an equivalent number of Pydraul AC.

If you need any other information, please let us know.

Sincerely yours,

W. KENNETH CONWELL
DISTRICT SALES MANAGER
ORGANIC CHEMICALS DIVISION

WKC:sg

P. S. Mr. Mayer, as soon as we receive information concerning the amount of material to be returned, we will enter a return material report. This return is authorized by D. F. Smith

COMPANY CONFIDENTIAL

TRAN 003825

Transwestern
EXHIBIT NO. 217
5/13/92 [illegible]

Telefax **WESTERN UNION** Telefax

446P CST OCT 15 65 NSA4

SB586 S LLN131 PD-FAX ST LOUIS MO 15 527P CDT

E C RIALL, ASSISTANT SUPERINTENDENT COMPRESSOR STATIONS

TEXAS EASTERN TRANSMISSION SPORT

FOAM APPARATUS FOR USE WITH MCS 153 IS AVAILABLE FROM FISHER SCIENTIFIC COMPANY. IT SHOULD BE ORDERED OR PURCHASED AS ASTM FOAM APPARATUS CATALOGUE NUMBER 13-537-5. THE ASTM METHOD FOR THIS DETERMINATION IS D-892-63. WE WILL MAIL YOU A COPY OF THIS METHOD NEXT WEEK. WILL SEND YOU THE REQUESTED CURVES ON DEFOAMERLESS MCS 153

D F SMITH MONSANTO

65 OCT 15 PM 4 50

MCS 153 ASTM 13-537-5 ASTM D-892-63 MCS 153.



TWZ-2006566

00081071

WATER_PCB-SD0000077709

Monsanto
COMPANY

ORGANIC CHEMICALS DIVISION

800 N. Lindbergh Boulevard
St. Louis, Missouri 63166
(314) WYdown 3-1000

October 22, 1965

Mr. E. C. Riall
Assistant Superintendent
Compressor Stations
Texas Eastern Transmission
P. O. Box 1612
Shreveport, Louisiana

Dear Mr. Riall:

Here is the MCS-153 foam test curve mentioned in Mr. Dale Smith's wire dated October 15. He asked me to send this along to you as soon as it was available.

Mr. Smith will return to the office Monday, October 25. If we can be of further service please let us know.

Sincerely,

Joyce A. Frank
Secretary to D. F. Smith
Functional Fluids

Enclosure 1

000810069

Transwestern
EXHIBIT NO. 219
5/12/92 KR

TW2-2007146

WATER_PCB-SD0000077710

TW2-2007147

00082007O

WATER_PCB-SD0000077711

Monsanto

ORGANIC CHEMICALS DIVISION

Monsanto Company
800 N. Lindbergh Boulevard
St. Louis, Missouri 63166
Phone (314) 694-1000

November 23, 1970

Mr. Bill Hartman
Texas Eastern Transmission Corporation
P. O. Box 1612
Shreveport, Louisiana 71102

Dear Mr. Hartman:

Research investigation results on the deposit samples from White Castle and St. Francisville stations were discussed with you by telephone. All this data has now been assembled. The report is summarized as follows and the results attached.

"This will record results of our various analyses of deposit samples received from Texas Eastern White Castle and St. Francisville stations in May and June, 1970. These results were given you verbally in mid-July and also to Texas Eastern in various phone calls.

To summarize our findings on Texas Eastern deposits, these contain large quantities of inorganic salts (specifically large amounts of sodium chloride), water, hydrocarbon oil, ethylene or propylene glycol, and inorganic oxides (corrosion products?). Particle sizes range from sub micron to sand sized grains. The stations where deposits are present are reported to be those which receive gas from off-shore wells. It is common practice to dry gas from wells by direct contact with glycols. Nature of deposits would indicate considerable entrainment of sea water contamination of "salt" water from wells as well as of dehydrating glycol. These contaminants are being carried downstream to the first stations on the line.

Transwestern
EXHIBIT NO. 220
5/13/92 KR

TW2-2003397

WATER_PCB-SD0000077712

Turbinol 153 separated from these deposits is normal. It should be emphasized that we found absolutely no changes in Turbinol 153 raw materials, process or finished fluid composition! These deposits are in no way related to Turbinol 153!

The attached charts indicate the detailed sequence of analysis used on these samples as well as quantities of components found and technique used to identify nature of component. Some difference in amount of salt present between our results and Texas Eastern results can be explained readily by the non-homogenous nature of the deposit samples."

The complete work required considerable time and the final reporting even more. Hopefully, the delay between the "telephone conversation report" and this final summation has not inconvenienced you in implementing a program for complete removal of the salts and other contaminants. Please let us know how we may be of further service.

Very truly yours,

D. F. Smith
Senior Product Specialist
Industrial Fluids

lb

Attach.

cc: Mr. John Gilcrease
Texas Eastern Transmission Corporation

WATER_PCB-SD0000077713

CHART I

St. Francisville Station, Number 2 Clark

Sample Dated 6/7/7[illegible]

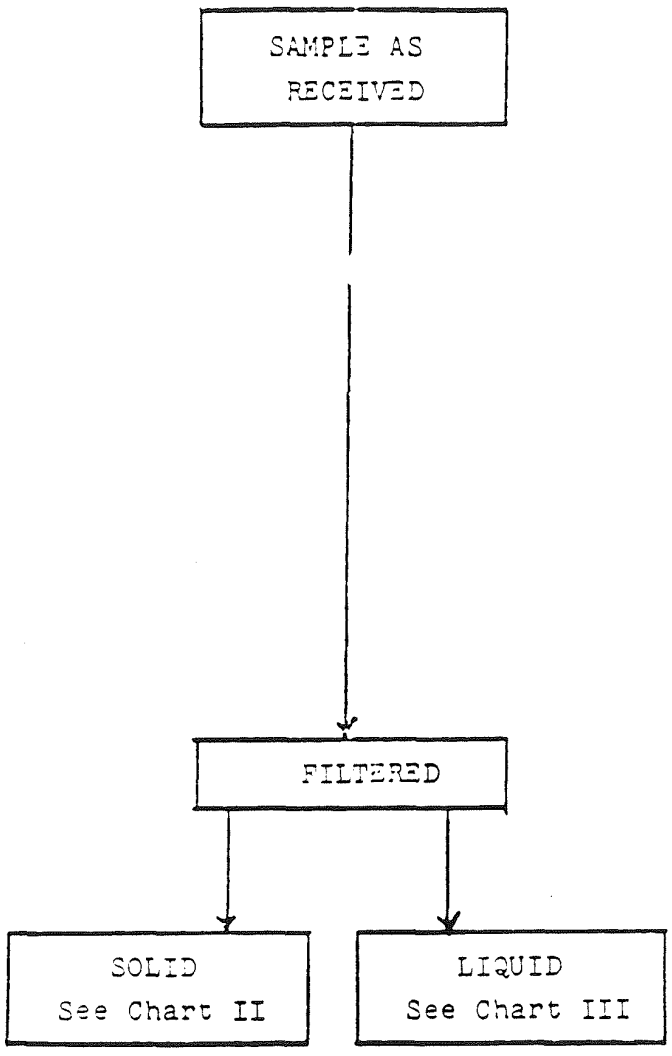

Visual:

Naked Eye - brown granular solids wet with oily liquid. Consistency paste-like. Most solids irregular and brown to black. Few white to clear particles visible.

Microscope 40X - white to clear cubic particles which dissolve in water. Dark particles irregular brownish red. Largest particles measured were 280 to 370 micron.

Microscope 100X - similar descriptions of particle shape and smallest particles measured were 0.15 to 0.3 micron.

TW2-2003399

WATER_PCB-SD0000077714

CHART II

St. Francisville Sample - Solid Portion from Chart I

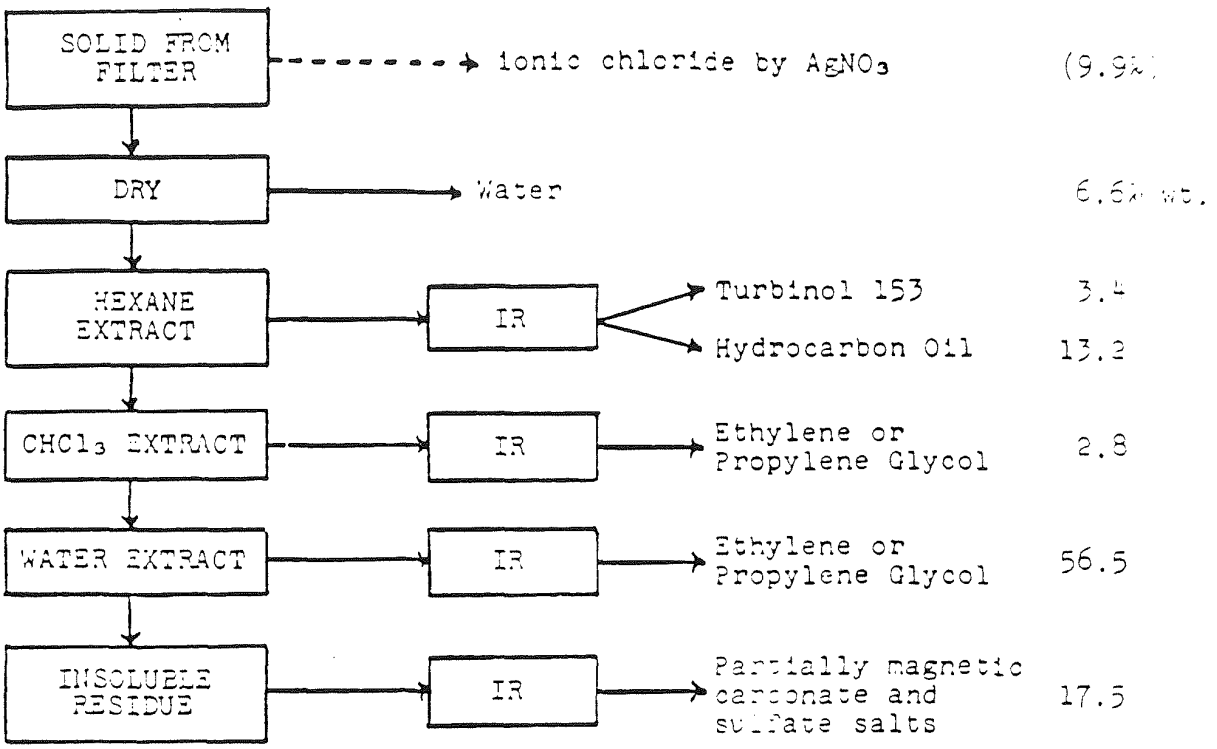

TW2-2003400

WATER_PCB-SD0000077715

CHART III

St. Francisville Sample - Liquid Portion from Chart I

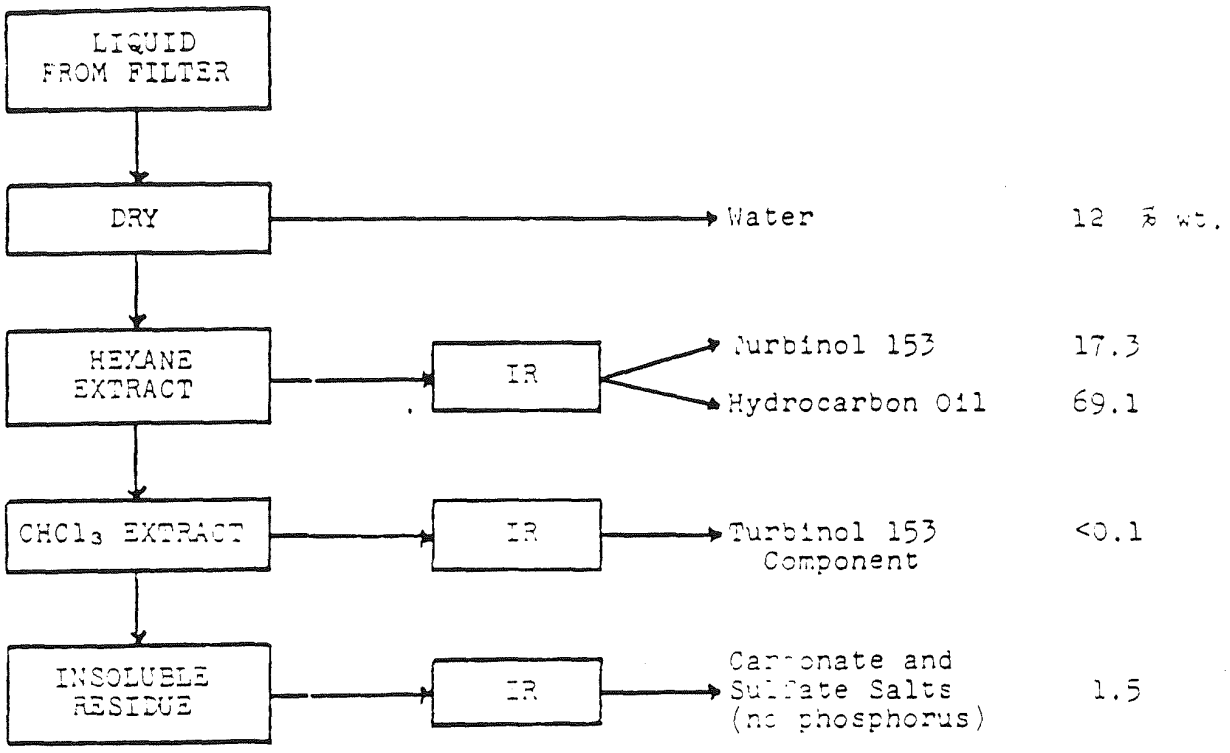

TW2-2003401

WATER_PCB-SD0000077716

CHART IV

White Castle Station, Solids from Clark Compressor Coupling

Sample Dated 5/27/'0

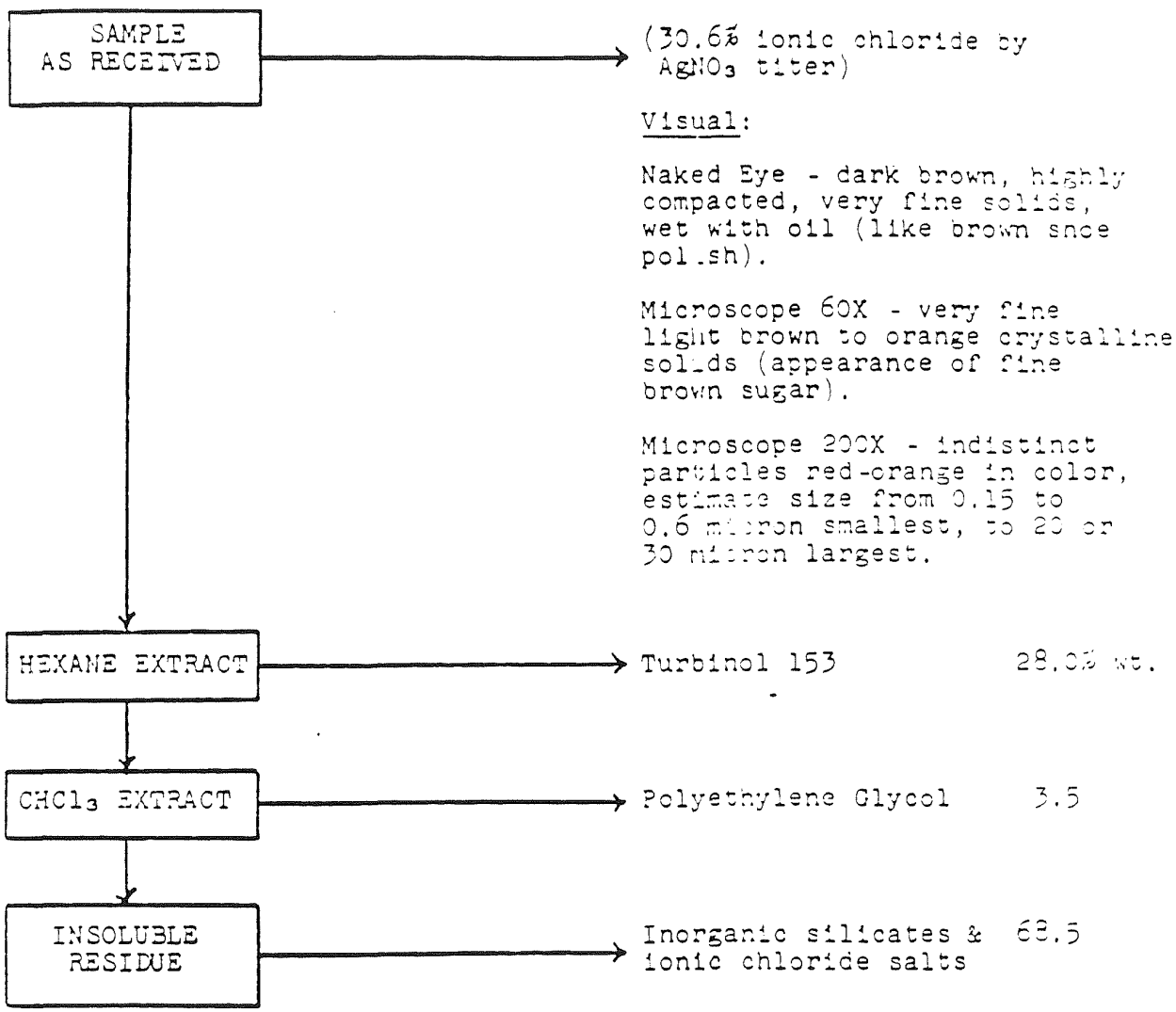

TW2-2003402

WATER_PCB-SD0000077717

CHART V

White Castle Station, Solids from Vapor Phase of Oil

Sample Dated 5/27/70

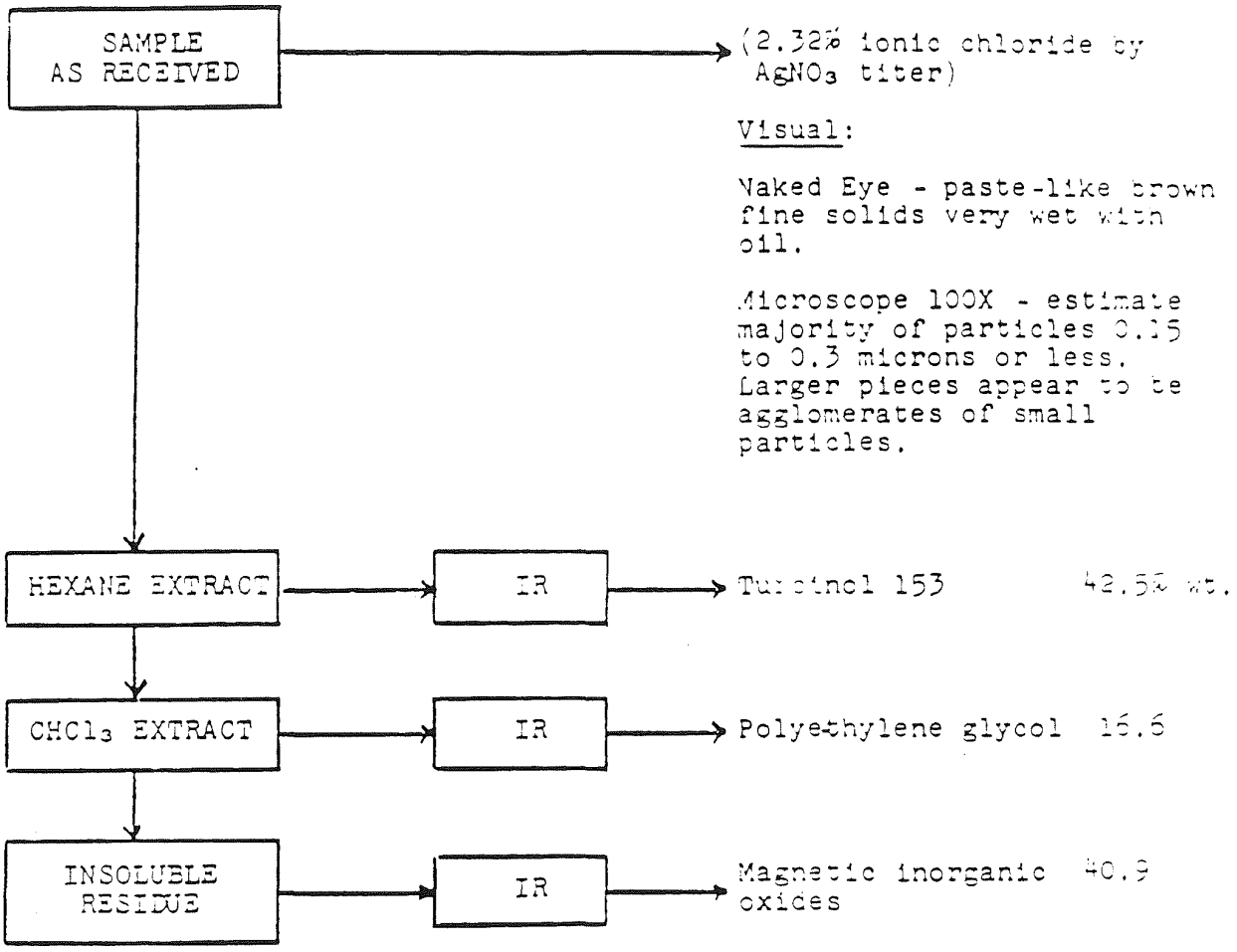

TW2-2003403

WATER_PCB-SD0000077718

CHART VI

White Castle Station, Solids on Metal Seal Ring

Sample Dated 5/27/70

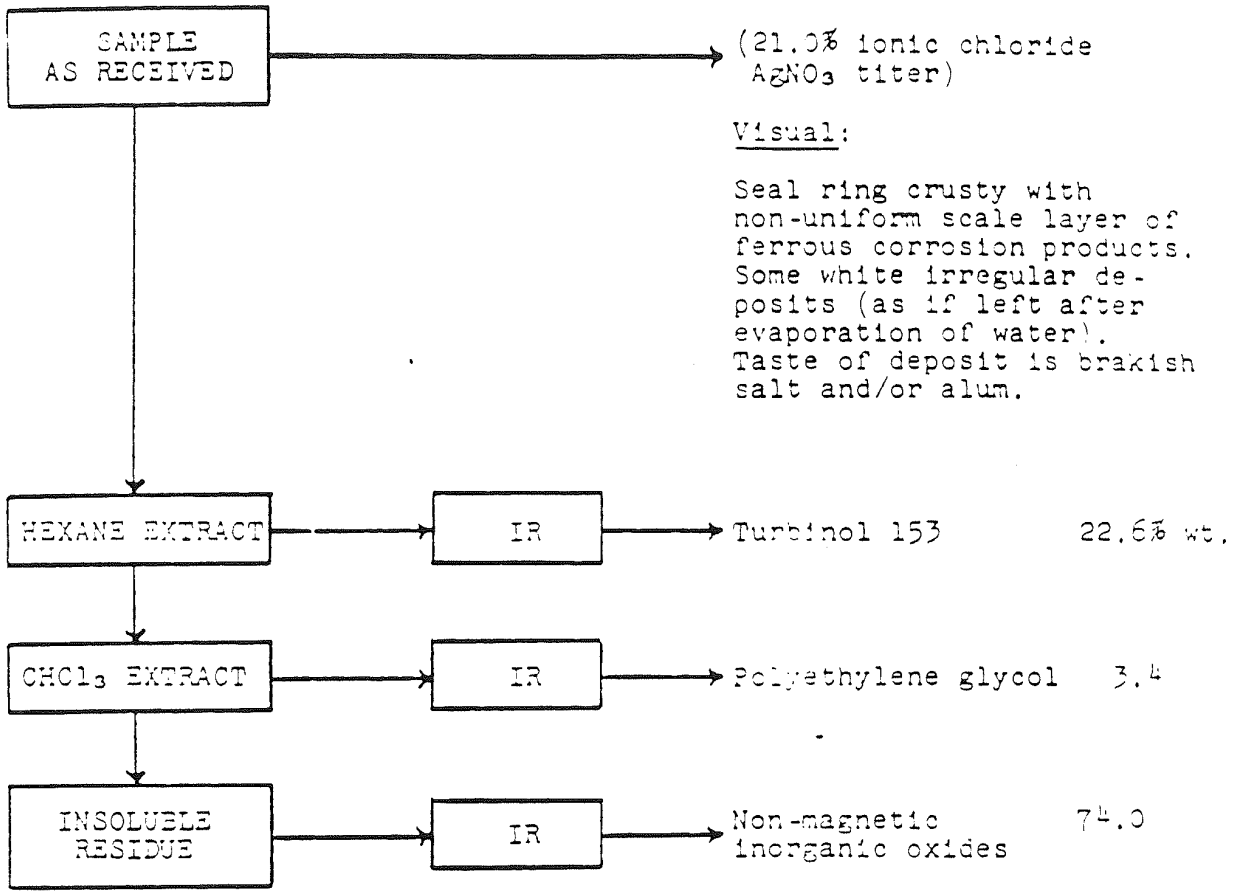

TW2-2003404

WATER_PCB-SD0000077719

CUSTOMER PROBLEM REPORT

CUSTOMER: Texas Eastern Trans.	REQUEST NO: SP-2-S	PRODUCT: Turbinol 153	
SHIP TO: New Waverly, Texas	DATE: 1-18-72	DATE ENTERED: 12-7-71	DATE RECEIVED:
	ARTICLE: COP-B2NO	SHIP NO: 4673943	DATE SHIPPED: 12-9-71
			QUANTITY: 1080 GL
			CARRIER: Sauget, Ill

FROM: Don Mayer — TO: Dale Smith

LOC: Sauget-1640 — LOC: St. Louis B2NO

SAMPLES OR EXHIBITS: None Available

SERVICE

SHIPPING: [ ] INCORRECT ROUTING; [ ] WRONG DESTINATION; [ ] WRONG EQUIPMENT; [ ] INADEQUATE BRACING; [ ] INADEQUATE LINING; [ ] PLANT DELAY; [ ] OTHER (EXPLAIN)

CARRIER: [ ] LATE DELIVERY; [ ] EARLY DELIVERY; [ ] UNLOADING PROBLEM; [ ] UNLOADING EQUIPMENT; [ ] DIRTY LINES; [ ] OTHER EXPLAIN

CONTAINERS: [ ] BAGS [X] DRUMS; [ ] WRONG TYPE; [ ] TORN; [ ] WET; [X] LEAKY; [ ] DIRTY; [ ] OTHER (EXPLAIN)

COMMERCIAL: [ ] OVERAGE OR SHORTAGE; [ ] BILLING

PRODUCT

CHEMICAL PROPERTIES: [ ] PH; [ ] ASSAY; [ ] ACIDITY; [ ] TRACE IMPURITIES

PHYSICAL PROPERTIES: [ ] ASH; [ ] ODOR; [ ] DIRT; [ ] LUMPS; [ ] COLOR; [ ] CAKING; [ ] SPECKS; [ ] RESIDUE; [ ] MOISTURE/DRYING LOSS; [ ] MESH SIZE; [ ] FOAM TEST; [ ] SOLUBILITY; [ ] VISCOSITY; [ ] APPEARANCE; [ ] MELTING POINT; [ ] FOREIGN OBJECTS; [ ] SPECIFIC GRAVITY; [ ] REFRACTIVE INDEX; [ ] TURBIDITY/CLARITY; [ ] CRYSTALLIZING POINT; [ ]

MISCELLANEOUS: [ ]

PROBLEMS: Customer reported receiving two different drum types- one type had flat bottoms the other type had two concentric corrugation riggs on the bottom. Customer found all drums with corrugation rings leaking from the bottom. Salesman Don Stegen inspected the drums and found the bottoms of these drums had bulged out so that it appeared the drums had ridden on the inner corrugation ring rather than the bottom rim. Stegen felt the bottom of the drum to flex and cracks in the metal to occur at the outer corrugation ring due to metal fatigue. Repeat- no flat bottom drums leaked customer will be reimbursed $269.50 for the loss of material.

Sleman- Don Stegen-Houston-1460
Dist Mngr- H. R. Ford-Atlanta-1070
Pd Mngr -L Bradfor-B2SO
Mters Serv- G. Taylor-B2NX

Freight Prepaid 11-21-72 (T)
-20% on product / D.T.Mayer

INVESTIGATION AND SOLUTION:

see attachment

D. T. Mayer
1/21/72

EXHIBIT NO. 221
5/13/92 KR

TRAN 002740

G-7777
REV 1-71

2. INVESTIGATOR COPY #2 - ORGANIC DIVISION

WATER_PCB-SD0000077720

Lot KA - 902
Filled on 11- 19 - (52)
11-20- (32)
11-21- (7)

Customer Problem Report

SP-2-S Turbinol 153

20 - 54 gal. 605 net lbs. Shipped on 12-9-71

Don:

Here is the answer to this complaint.

On or about November 9, 1971 we made a decision to change drum specifications from an all 18 ga. to a combination 18 ga. ~~and~~ sidewall and head with a 16 ga. bottom. This was done due to the great number of complaints received on leaking bottoms on the corrugated rings. We did have some full 18 ga. drums in storage (trailers dropped as build up for strike contigency) . Of a necessity we did wind up filling some drums out of the same lot with the mixture of the old and the "new" drums.

Since this change was made in Nov. 1971, we have recently (January 10, 1972) changed our drum specifications to an all 16 ga. constructed drum (DOT 5B) which weighs 68 lbs tare.

Without looking at the drums I am sure that we would find indentations in the cushion rings, and these dents caused the drum to fail as the result of metal fatigue.

I am attaching a copy of my final report and the report of Rudy Spanholtz, which shows that all of our failures have been the result of metal fatigue, due to the drums being dented. In my opinion this is done prior to the drum being filled. Since we went to the 16 ga. bottoms there have been no failures (at least none reported). Changing to an all 16 ga. construction should eliminate leakers of this nature.

TRAN 002741

Orville Mueth

WATER_PCB-SD0000077721

TRAN 001382

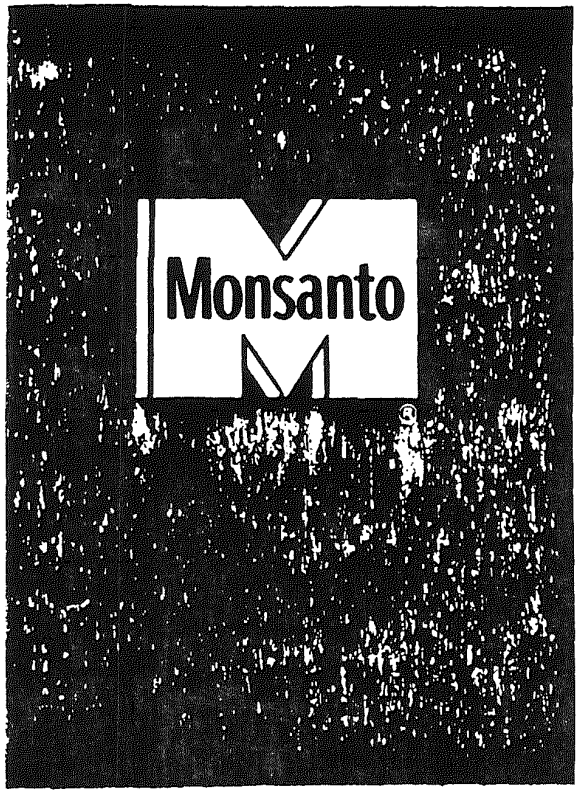

MCS® 153

SYNTHETIC FUNCTIONAL FLUID

CAUTION: Contains chlorinated hydrocarbons. Avoid prolonged breathing of vapors or mists. Avoid contact with eyes or prolonged contact with skin. If skin contact occurs, remove by washing with soap and water. Following eye contact flush with water. If clothing becomes soaked with fluid, launder before wearing again.

LOT NO. _____ PACKER _____

NET LEGAL	**605** LBS.	**274.42** KILOS	TARE	48 LBS.	21.77 KILOS
			GROSS	653 LBS.	296.19 KILOS

MONSANTO COMPANY, ST. LOUIS, MISSOURI, U.S.A. 804.48-000.01/53

EXHIBIT NO. 222
5/13/92 KH

WATER_PCB-SD0000077722

TRAN 001383

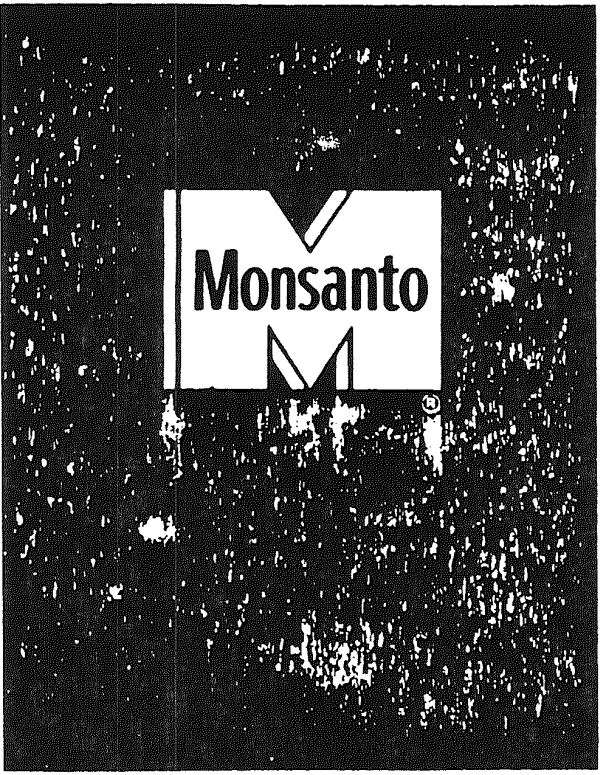

TURBINOL® 153

SYNTHETIC FUNCTIONAL FLUID

FORMERLY MCS 153

CAUTION: Contains chlorinated hydrocarbons. Avoid prolonged breathing of vapors or mists. Avoid contact with eyes or prolonged contact with skin. If skin contact occurs, remove by washing with soap and water. Following eye contact flush with water. If clothing becomes soaked with fluid, launder before wearing again.

LOT NO._____ _____ PACKER

NET LEGAL	**605**	LB.	**274.42**	KG.	TARE	48 LB.	21.77 KG.
					GROSS	653 LB.	296.19 KG.

MONSANTO COMPANY, ST. LOUIS, MISSOURI 63166, U.S.A. 804.48 000.02/53

Transwestern
EXHIBIT NO. 223
5/13/92 fm

WATER_PCB-SD0000077723

Monsanto
COMPANY

[illegible]
St. Louis, Missouri [illegible]
[illegible]

August 22, 1968

Mr. W. M. Stephens
Superintendent
Design and Construction
Texas Eastern Transmission Corporation
P. O. Box 1612
Shreveport, Louisiana 71102

Dear Mr. Stephens:

In a recent conversation with Earl Farmer, he suggested we write to you outlining various control limits for MCS-153, the safety fluid used in remote controlled gas turbines on Texas Eastern's pipeline system. Earl indicated this information would be useful to station operating personnel especially in view of the frequent changes in manpower. A formal technical bulletin on MCS-153 has not been published and this letter would fill the need.

MCS-153 is a straight synthetic fire-resistant gas turbine lubricant which provides safety and excellent lubrication and is compatible with all common metals of construction, such as brass, bronze, steel, iron, aluminum, etc. usually found in hydraulic and various lubrication systems. The number one recommendation for seals and gaskets particularly dynamic elastomers is Viton. Silicone, Fluorel, Teflon are equally compatible but often not available in desired configurations. Butyl rubber elastomers and EPR are acceptable but service life with MCS-153 may be reduced depending upon operating conditions. Temperature is an important variable when using the less acceptable seals and packing materials.

TW2-2004865

PLAINTIFF'S EXHIBIT 5
1-9-92

Transwestern
EXHIBIT NO. 224
5/13/92 [illegible]

WATER_PCB-SD0000077724

When surfaces which could come in contact with the fluid are to be painted, we recommend cured epoxy, cured phenolic and nylon base paints. The enclosed booklet "Converting to Pydraul Fluids" contains information on seals, paints, hoses, couplings, etc. applicable to MCS-153. We are sending extra copies should you desire to circulate them to station personnel.

As to the fluid itself, we do not claim it to be unchangeable or indestructible--just the next thing to it. MCS-153 with normal use and periodic filtration will provide satisfactory service indefinitely. There is nothing to wear out in MCS-153 thus it can be virtually considered as a permanent part of the system. Occasionally minor shear down in viscosity is found in sample analysis. The main property to check in MCS-153 is specific gravity. Specific gravity is the most unchangeable part of MCS-153 and will be altered only by the addition of a solvent or lesser viscosity fluid such as petroleum oil. Such contamination is easy to spot on the frequent checks of fluid from your various stations.

Our laboratory personnel are alert to the importance of picking up any major deviation in fluid quality in samples from Texas Eastern stations. They are quick to report any such changes and we in turn will be in direct contact with you or other Texas Eastern personnel recommending necessary adjustments.

Hopefully this information will provide some general guidelines to operating personnel at Texas Eastern's many stations using MCS-153--now and future. If we may provide additional information or service, please let us know immediately.

Very truly yours,

D. F. Smith
Senior Product Specialist
Functional Fluids

/mms

cc: Walter Woods, Head of Turbine Section Engineering
Earl Farmer, Engineering Department
Ted Harrison, Asst. Purchasing Agent, Houston Office

TW2-2004866

WATER_PCB-SD0000077725

Facts About Fire-Resistant Lubricants

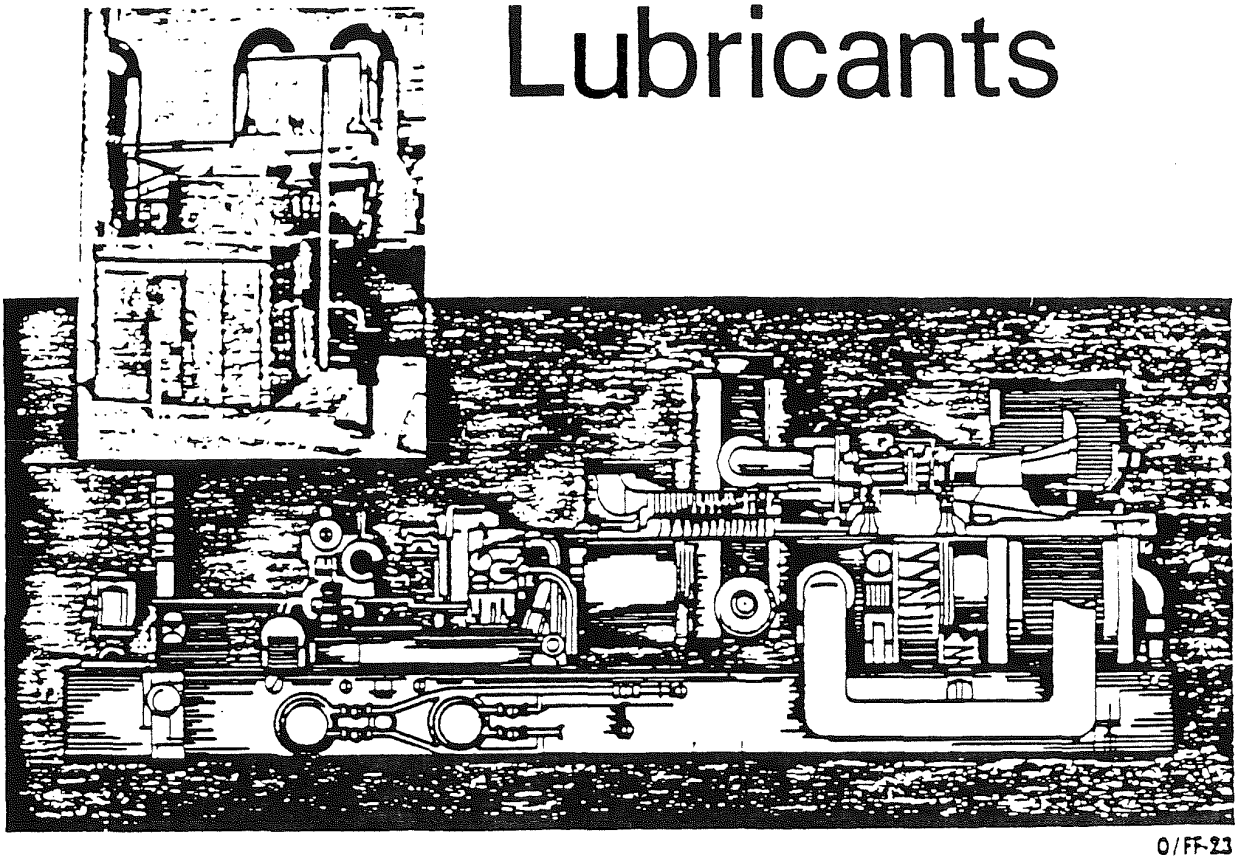

O/FF-23

TURBINOL

TURBINE LUBRICANT BY Monsanto

TRAN 001387

Transwestern
EXHIBIT NO. 925
5/13/92 [illegible]

DEPOSITION EXHIBIT
PIF's 72
3-24-92

Introduction

Monsanto's Turbinol® 153 is a fire resistant synthetic fluid specially designed for turbine systems. Turbinol 153 has years of safe, continuous operation as both the lubricant and control fluid in commercial pipe line gas turbines. The unique chemistry of Turbinol 153 offers excellent thermal-oxidative and hydrolytic stability.

The following abridged excerpts are from a paper titled, "Fire Resistant Lubricants In Gas Turbines," by Earl P. Farmer, Jr., of Texas Eastern Transmission Corporation. The paper was presented during the annual meeting of the American Society of Lubrication Engineers (ASLE), Power Generation Council Technical Session, in Chicago on May 4-7, 1970. It will appear as an article in Lubrication Engineer, the official ASLE magazine.

Hazards of Petroleum Lubricating Oils

The potential hazards inherent in using petroleum lubricating oils in high speed, high temperature gas turbine installations prompted Texas Eastern to investigate the applications of fire-resistant lubricants in our gas turbine installations. From our experiences, several potentially disastrous lube oil fires were prevented by alert operators who happened to be in the right place when turbine failures occurred. In another case, a turbine failure caused a lube oil fire, resulting in a complete station outage. A load compressor failure was responsible for another lube oil fire, which resulted in damages far more critical in the station operation than the compressor failure.

Still another hazard exists in the use of centrifugal pipe line compressors. These units require high-pressure seal oil systems with considerable external piping and controls. Even minor control and piping failures initiate emergency shut-down conditions, which, when using petroleum oil, necessitate the immediate shut-down of oil pumps to prevent feeding of possible fires. This means the high speed rotating elements must coast down with no lubrication, resulting in the strong possibility of wiped bearings. If the bearings are wiped badly, additional internal damage to the rotating elements and seals can result. Thus a minor failure can lead to a major station outage.

Advancing technology combined with rising operating costs led to the development and rapidly increasing use of automatic, remotely controlled, unmanned pipeline compressor stations. Obviously, this type of installation becomes most vulnerable to the potential hazards of lube oil fires. The obvious solution to these potential hazards is the use of fire-resistant lubricants.

Texas Eastern Tries Synthetics

In 1958, Texas Eastern pioneered the use of fire-resistant lubricants in large, industrial gas turbines when we installed four 13,400 HP @ 80°F. units with the phosphate ester based fluid as the only lubricant.

Today, we have twenty industrial type gas turbines in service using the fire resistant fluid in the oil systems. These twenty units, with a total of 323,800 HP, have operated in excess of 410,000 hours without any failures attributed to the fire resistant fluid.

Our operating experience over the past twelve years has proven the fire resistant fluid used in our gas turbines to be extremely stable, both thermally and oxidatively. None of the units using this lubricant have experienced an oil change because of excessive oxidation. Periodic tests have indicated little change in the neutralization number. A coupling guard leakage at one station provided a practical test of the oil's fire resistance by spraying oil against a 700 F. exhaust housing with no fire resulting. Modifications and repairs by welding on oil piping within the oil tanks further demonstrated fire resistance.

Because of the added safety factor and the proven reliability and stability of the fire resistant fluid, it has become the standard lubricant in all our industrial type gas turbine installations placed in service since 1958.

WATER_PCB-SD0000077727

Typical Properties of Turbinol

PHYSICAL PROPERTIES

Appearance		Clear, amber colored oily liquid
Specific Gravity, variation with temperature:	40°F./60°F.	1.356
	100°F./60°F.	1.325
	200°F./60°F.	1.273
Neutralization Number (Acidity) (Mg KOH/gm)		0.02-0.1
Moisture Max.)		0.15%
Viscosity Saybolts (SSU) Measured: @	40°F.	2160
	100°F.	108
	210°F.	37.1
Absolute-centipoise: @	40°F.	469
	100°F.	29.7
	210°F.	4.1
Pour Point		0°F.
Vapor Pressure (mm Hg @ 200°F.)		0.025
Boiling Point		625°F.
Secant Bulk Modulus (psi) @ 100°F.		412,000
Coefficient of Thermal Expansion cc/cc/°F.		0.00037
Solubility In Water		Negligible

TRAN 001389

WATER_PCB-SD0000077728

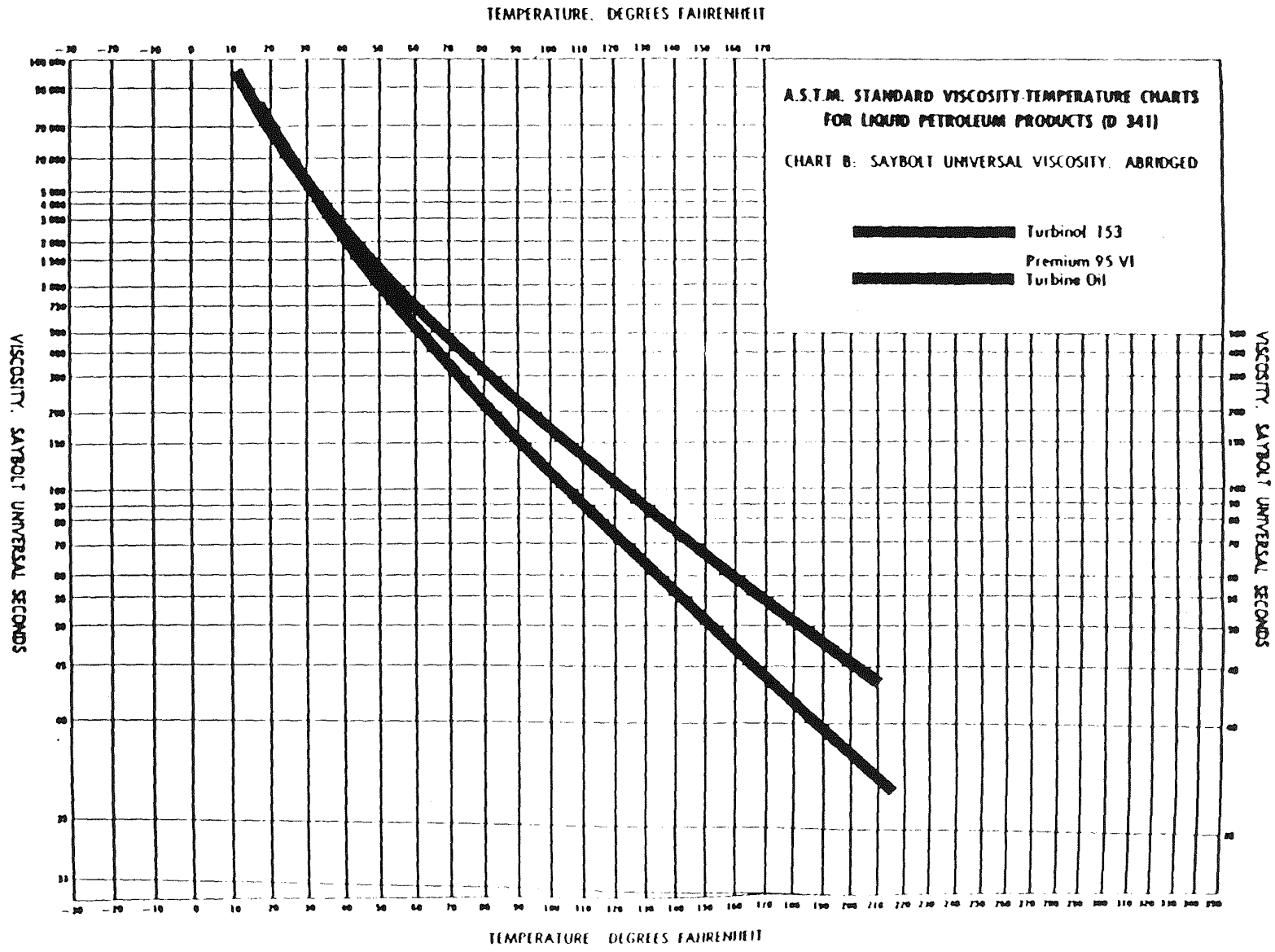

TRAN 001390

WATER_PCB-SD0000077729

LUBRICATION PROPERTIES

	Turbinol 153	Typical Premium R&O Turbine Oil
Four-Ball Wear Test (mm scar diameter) 620 rpm, 167 F., 1 hr.		
Steel/steel 10 kg	0.23	—
40 kg	0.53	0.6 to 1.0
Steel/bronze 10 kg	0.92	2.0 to 3.0
Timken Test Passing Load, lbs.	40	15
Falex Load		
Jaw Load, lbs.	4050	880
Torque, lb. inches	60	27

STABILITY AND CORROSION PROPERTIES

	Turbinol 153	Typical Premium R&O Turbine Oil
ASTM Rust Test D-665 140°F. Distilled Water	Pass	Pass
ASTM Emulsion Test D-1401 ml Emulsion after 30 minutes	0	0
ASTM Foam Test D-892		
Sequence 1	Pass	Pass
Sequence 2	Pass	Pass
Sequence 3	Pass	Pass
ASTM Turbine Oil Stability Test D-943 (Modified*) Hrs. to reach 2.0 mg KOH/g	>2000	2000
Hydrolytic Stability Test (MILH 19457—Beverage Bottle Test) 200°F. water, 48 hrs., Cu strip	Pass	Pass
Oxidation/Corrosion Test 168 hrs., 250°F., air		
Metal Attack, mg/cm²		
Al	—0.01	0.0
Mg	—0.01	0.0
Cu	—0.04	0.0
Fe	0.0	0.0
Cd	—0.01	0.0
Viscosity		
% Change, 100°F.	+8.5	+1.7
% Change, 210°F.	+0.6	+1.1
Acidity, TAN Change	+0.02	+0.41

*Because of the higher specific gravity of Turbinol, water used in the test would not settle to the bottom of the test cylinder. Hence, oxygen stream was saturated with water before being bubbled through the test fluid.

FIRE RESISTANCE PROPERTIES

High-Pressure Spray Test (AMS 3150-C and Federal Test Method Std. 791)	Localized flashing in contact with flame but self-extinguishing.
Low Pressure Spray Test	Slight increase in flame intensity.
Hot Manifold Test (Federal Test Method Std. 791)	
1300°F. Tube	Intermittent flashing on tube. Does not propogate flame to pan below.
950°F. Tube	Does not flash.
Molten Metal Ignition (Aluminum alloy @ 1200°F.)	Does not ignite spontaneously. Flashes intermittently with ignition source, but self-extinguishes.

ALCOR DEPOSITION TEST

48 hours, 250°F. fluid, 1000 ml/min. air flow @ 400°-475°F. tube temperature.

	Turbinol 153	Petroleum Oil
Total Deposit Rating	10.5	10.5
Filter, mg.	10	13
Acidity, TAN Change	+ 0.03	— 0.02

TRAN 001391

WATER_PCB-SD0000077730

Seals and Packings Information

Materials compatible with Turbinol are necessary for dynamic or moving seals. For static seals they are preferred, but not essential. The following table indicates materials recommended. Packing materials such as impregnated asbestors are usually satisfactory with Turbinol. Consult your Monsanto fluid specialist for specific recommendations.

This list of component manufacturers is a guide to obtaining seals compatible with Turbinol. Please contact your equipment manufacturer or seal supplier for their most current recommendations.

Acushnet Process Company
776 Belleville Avenue
New Bedford, Massachusetts 02745

Anchor Packing Company
401 North Broad Street
Philadelphia, Pennsylvania 19108

Bearings, Inc.
3634 Euclid Avenue
Cleveland, Ohio 44115

A. W. Chesterton Company
Everett
Massachusetts 02149

Chicago Rawhide Manufacturing Company
1311 Elston Avenue
Chicago, Illinois 60622

C. E. Conover & Company, Inc.
333 Passaic Avenue
Fairfield, New Jersey 07006

Crane Packing Company
6400 Dakton Street
Morton Grove, Illinois 60053

Garlock Packing Company
Palmyra
New York 14522

Gosnen Rubber Company, Inc.
P. O. Box 416
Gosnen, Indiana 46526

Greene, Tweed & Company
North Wales
Pennsylvania 19454

Hercules Packing Corporation
11061 Walden Road
Alden, New York 14004

International Packing Corporation
Bristol
New Hampshire 03104

Johns-Manville
22 East 40th Street
New York, New York 10016

C. W. Marsh Company
36 Hudson Street
Muskegon, Michigan 49441

Minnesota Rubber Company
3630 Wooddale Avenue
Minneapolis, Minnesota 55416

Parker Seal Company
10567 Jefferson Boulevard
Culver City, California 90230

Plastic & Rubber Engineering, Inc.
756 East Florence Avenue
Los Angeles, California 90001

Plastic & Rubber Products Company
2100 Hyde Park Boulevard
Los Angeles, California 90047

Precision Rubber Products Corporation
Hartmann Drive
Lebanon, Tennessee 37087

Raybestos-Manhattan, Inc.
Packing Division
Passaic, New Jersey 07055

Reliable Rubber Products
Eddyington
Pennsylvania 19020

Rockwell Mechanical Packing Company, Inc.
1634 Long Beach Avenue
Los Angeles, California 90021

W. S. Shamban Company
11617 West Jefferson Boulevard
Culver City, California 90230

Vellumoid Company
Rockdale Street and Beaman Avenue
Worchester, Massachusetts 01606

The James Walker Packing Company, Inc.
P. O. Box 75
Chicago Heights, Illinois 60411

Filters and Hoses

FILTERS Most standard oil filters are satisfactory. You can use active earth or clay types. Filter manufacturers include:

Briggs Filtration Division
Bowser Corporation
Cookeville, Tennessee 38501

Capital Engineering Company
5839 Ashland Avenue
Chicago, Illinois 60610

Commercial Filters Corporation
(Honan-Crane)
Lebanon, Indiana 46052

Cuno Engineering Corporation
Sub. of American Machine & Foundry
4627 S. Vine Street
Meriden, Connecticut 06450

Dollinger Corporation
20 Centre Park
Rochester, New York 14608

Fulflo Specialties Company, Inc.
410 Fancy Avenue
Blanchester, Ohio 45107

Hilliard Corporation
98 W. Fourth Street
Elmira, New York 14903

Marvel Engineering Company
7227 North Hamlin Avenue
Chicago, Illinois 60645

Pall Corporation
32 Sea Cliff Avenue
Glen Cove L. I., New York 11542

Purolator Products
1000 New Brunswick Avenue
Rahway, New Jersey 07065

Rosaen Filter Corporation
1776 E. Nine Mile Road
Hazel Park, Michigan 48030

Schroeder Bros. Corporation
101 Nichol Avenue
McKees Rocks, Pennsylvania 15136

Serfilco Division
Service Filtration Corporation
7408 North Milwaukee
Niles, Illinois 60648

HOSES Butyl, nylon, Viton or Teflon are preferred when new hoses are installed. Suppliers include:

Anchor Coupling Company
3600 N. Fourth Street
Libertyville, Illinois 60048

Eastman Mfg. Company
(See Imperial-Eastman Corp.)
Department T. R.
6300 West Howard Street
Chicago, Illinois 60648

Electric Hose & Rubber Co.
1201 Duro Street
Wilmington, Delaware 19899

Gates Rubber Company
999 South Broadway
Denver, Colorado 80217

Imperial Eastman Corp.
6300 W. Howard Street
Chicago, Illinois 60648

Lewis Products
Hohenwald, Tennessee 38462

Samuel Moore Co.
Mantua, Ohio 44255

Resistoflex Corp.
Roseland New Jersey 07068

Stratoflex, Inc.
222 Roberts Cutoff Rd.
Fort Worth, Texas 76114

Weatherhead Corp.
302 E. 131st Street
Cleveland, Ohio 44108

TRAN 001392

WATER_PCB-SD0000077731

Other Components

SWIVEL COUPLINGS

Systems for Turbinol fluids often contain swivel couplings. Some suppliers are:

Chiksan Division
FMC Corporation
332 N. Brea Boulevard
Brea, California 92621

PIPE JOINT SEALERS

. . . can be bought from:

American Sealants Company
(See Loctite Corporation)
[illegible] S N. Mountain Road
[illegible]artford, Connecticut 06111

Crane Packing Company
6410 Oakton Street
Morton Grove, Illinois 60053

Dow Corning Corporation
Midland, Michigan 48640

Friesland Plastics Company
Friesland, Wisconsin 53935

General Electric Company
Insulating Materials Department
1 Campbell Road
Schenectady, New York 12306

Permatex Company
Department T. R.
Flagler Court Building
West Palm Beach, Florida 33401

W. S. Shamban & Company
11617 W. Jefferson Boulevard
Culver City, California 90230

Shell Chemical Company
110 W. 51st Street
New York, New York 10019

ACCUMULATORS

. . . some systems for Turbinol contain an accumulator which uses a bladder to separate the fluid from air or nitrogen pressure. For these, a rubber compatible with the fluid is necessary. Suppliers include:

Greer Hydraulics, Inc.
5930 W. Jefferson Boulevard
Los Angeles, California 90016

PAINTS

. . . resistant to Turbinol are supplied by:

Amercoat Corporation
Department T
Brea, California 92621

Andrew Brown Paint Company
5413 S. District Boulevard
Los Angeles, California 90022

Carboline Company
22-R Hanley Industrial Court
St. Louis, Missouri 63130

Carrol Products
148 Maione Street
Farmingdale, New York 11735

Finch Paint & Chemical Company
Torrence, California 90507

W. P. Fuller & Company
1645 W. Valencia Drive
Fullerton, California 92633

The Glidden Company
900 Union Commerce Building
Cleveland, Ohio 44114

Interchemical Corporation
Finishes Division
1255-T Broad Street
Clifton, New Jersey 07011

Lowe Brothers Company
Third & Madison Streets
Dayton, Ohio 45426

Magna Coatings & Chemical Corporation
1785 N. Eastern Avenue
Los Angeles, California 90032

Nycote Laboratories
15002 Delano Street
Van Nuys, California 91401

Pittsburgh Plate Glass Company
One Gateway Center
Pittsburgh, Pennsylvania 15222

Rinshed-Mason Company
5935 Milford
Detroit, Michigan 48210

Royalty Paint & Varnish Company
Pasadena, California 91101

Saran Protective Coatings Company
2415 Burdette at Reed
Ferndale, Michigan 48220

Sherwin-Williams Company
101 Prospect Avenue, N. W.
Cleveland, Ohio 44115

Titanine, Inc.
Seagrave Corporation
Elmwood & Morris Avenues
Union, New Jersey 07087

U. S. Paint, Lacquer & Chemical Company
2101 Singleton
St. Louis, Missouri 63103

SOLUBILITY WITH OTHER FLUIDS

Other Phosphate Ester and Phosphate Ester-Base	Soluble in all proportions
Petroleum Oils	Soluble in all proportions, but petroleum oil can reduce the fluid's fire resistance.

HEAT TRANSFER PROPERTIES

Specific Heat BTU/lb/°F	
60°F.	0.297
100°F.	0.304
150°F.	0.318
200°F.	0.327
Thermal Conductivity BTU/°F./ft/hr	
60°F.	0.061
100°F.	0.061
150°F.	0.060
200°F.	0.060

ELECTRICAL PROPERTIES

Dielectric Constant @ 25°C.	
@ 60 cycles/sec.	6.52
@ 1000 cycles/sec.	5.94
Power Factor @ 25°C., %	
@ 60 cycles/sec.	52.00
@ 1000 cycles/sec.	3.45
Specific Resistivity (ohm-cm)	
@ 25°C.	1.7×10^{10}
@ 100°C.	2.0×10^{9}

WATER_PCB-SD0000077732

DISTRICT SALES OFFICES ALL DIVISIONS

AKRON, OHIO 44313
260 Springside Drive
Montrose Development Park
Tel. (216) 666-4111

ATLANTA, GEORGIA 30326
Lenox Towers East
3400 Peachtree Rd. N. E. — Suite 1711
Tel. (404) 577-2260

BOSTON, MASSACHUSETTS 02149
Everett Station
Tel. (617) 387-5010

CHICAGO, ILLINOIS
3158 Des Plaines Ave.
Des Plaines, Illinois 60018
Tel. (312) 296-6688

CINCINNATI, OHIO 45206
1501 Madison Road
Tel. (513) 751-6707

DETROIT, MICHIGAN 48235
500 Northland Towers East
Tel. (313) 357-0910

HONOLULU, HAWAII 96812
205 Pacific International Bldg.
677 Ala Moana Blvd., P. O. Box 3824
Tel. (808) 531-2744

HOUSTON, TEXAS 77027
1301 Post Oak Tower
5051 Westheimer Road
Tel. (713) 621-9550

LOS ANGELES, CALIFORNIA 90022
6670 E. Flotilla St.
Tel. (213) 723-2492

NEW ENGLAND AREA
Hydrocarbons & Polymers Div.
730 Worcester St., Indian Orchard, Mass. 01051
Tel. (413) 788-6911
Plastic Products & Resins Div.
P. O. Box 2130, Springfield, Mass. 01101
Tel. (413) 788-6911

NEW YORK, NEW YORK 10017
277 Park Avenue
Tel. (212) 922-4111

ST. LOUIS, MISSOURI 63166
800 N. Lindbergh Blvd.
Tel. (314) 694-1000

SAN FRANCISCO BAY AREA
2710 Lafayette, Santa Clara, Calif. 95052
Tel. (408) 243-0414

SEATTLE, WASHINGTON 98121
2112 Third Avenue
Tel. (206) 622-4203

WILMINGTON, DELAWARE 19803
2005 Concord Pike, Fairfax
Tel. (302) 658-8531

Additional District Offices are maintained by:

Agricultural Division

ALLENTOWN, PENNSYLVANIA 18104
Park Professional Building
2200 Hamilton Street
Tel. (215) 437-6471

DECATUR, ILLINOIS 62523
207 Decatur Professional Building
383 South Main Street
Tel. (217) 423-6031

DES MOINES, IOWA 50310
212 Merle Hay Tower
Tel. (515) 276-8503

FREMONT, NEBRASKA 68025
150 South Main Street
Tel. (402) 727-1230

INDIANAPOLIS, INDIANA 46206
Suite 218 6000 Meadows Drive Building
Tel. (317) 547-9148

KANSAS CITY, MISSOURI 64133
701 Blue Ridge Tower
4240 Blue Ridge Boulevard
Tel. (816) 353-8080

LULING, LOUISIANA 70070
P. O. Box 176
Tel. (504) 784-6283

MANKATO, MINNESOTA 56001
111 Madison East
Tel. (507) 387-3406

MEMPHIS, TENNESSEE 38104
303 Union Plaza Building
1836 Union Avenue
Tel. (901) 278-7811

MUSCATINE, IOWA 52761
P. O. Box 473
Tel. (319) 263-1331

Hydrocarbons & Polymers Division-Lisa Oil

EL DORADO, ARKANSAS 71730
Lion Oil Building
Tel. (501) 863-3111

JACKSON, MISSISSIPPI 39209
P. O. Box 10837 Westland Station
Tel. (601) 352-3448

N. LITTLE ROCK, ARKANSAS 72119
410 West 8th Street, P. O. Box 6821
Tel. (501) 376-2437

MEMPHIS, TENNESSEE 38113
1023 Riverside Drive, P. O. Box 13248
Tel. (901) 948-4481

Organic Division *(Rubber Instruments)*

AKRON, OHIO 44311
920 Brown Street, P. O. Box 2307
Tel. (216) 434-1962

Plastic Products & Resins Division

EUGENE, OREGON 97401
P. O. Box 1819
855 Seneca Road
Tel. (503) 342-7201

KENILWORTH, NEW JERSEY 07033
North Seventh St. & Monroe Ave.
Tel. (201) 276-2300

Textiles Division

ATLANTA, GEORGIA 30303
Atlanta Merchandise Mart
240 Peachtree St., N. W.
Tel. (404) 577-2260

CHARLOTTE, NORTH CAROLINA 28210
6230 Fairview Road, Suite 400
Tel. (704) 364-0110

GREENVILLE, SOUTH CAROLINA 29606
McAlister Plaza
P. O. Box 6564, Station B
Tel. (803) 233-9171

NEW YORK, NEW YORK 10001
350 Fifth Ave.
Tel. (212) 868-6100

Monsanto

Monsanto Company / Functional Fluids / 800 North Lindbergh Blvd. / St. Louis, Missouri 63166

TRAN 001394

WATER_PCB-SD0000077733

C. L. Curtis - CCURT
R. A. Garcia - Akron
C. L. Clay - CCLAY
NTJ/DFS/DAH

August 26, 1970

Mr. A. DeLeon
Assistant Director
Public Relations
Texas Eastern Transmission Corporation
Houston, Texas 77001

Dear Mr. DeLeon:

Confirming our telephone conversation this morning, we would like Texas Eastern's approval to incorporate a portion of Earl Farmer's technical paper titled "Fire Resistant Lubricants in Gas Turbines" in a new Monsanto Turbinol 152 technical brochure.

A copy of Earl's paper is attached. Those portions for use in the Turbinol brochure are bracketed. The title, author and company, date of presentation and group (A.S.L.E.) would precede the body as introduction. This is also bracketed as it would appear in the brochure.

This publication is intended for use by gas turbine users and manufacturers to encourage the use of safe, fire resistant turbine lubricants and to provide useful design and engineering data. It will include physical and performance properties of Monsanto's Turbinol fire resistant fluids.

Thank you for your cooperation. We look forward to your approval.

Very truly yours,

D. R. Pegue

lb

cc: Mr. O. M. Fletcher
Mrs. A. Smith
Mr. E. P. Farmer, Jr.
Mr. W. E. Worley

TRAN 002454

WATER_PCB-SD0000077734

TEXAS EASTERN Transmission Corporation
801 MAIN AT MCKINNEY P.O. BOX 2521 HOUSTON, TEXAS 77001

September 3, 1970

Mr. Don Pogue
Monsanto Company
800 Lindbergh Boulevard
St. Louis, Missouri 63166

Dear Mr. Pogue:

Confirming our telephone conversation of today, we are happy to give you authority to use excerpts from Mr. Earl Farmer's technical paper entitled "Fire Resistant Lubricants in Gas Turbines".

I would appreciate it if you would send me a copy of the brochure when it is published. If we can be of any further assistance, please don't hesitate to call on us.

Sincerely,

Armando de Leon

Armando de Leon
Assistant Director of
Public Relations

TRAN 002455

WATER_PCB-SD0000077735

BC: Mr. D. F. Smith

March 20, 1953

Mr. L. N. Rodenhouse
Acme Protection Equipment Company
1201 Kalamazoo Street
South Haven, Michigan

Dear Mr. Rodenhouse:

Your letter of March 4 has been referred to me for reply.

Monsanto's hydraulic fluid Pydraul A-200 contains chlorinated hydrocarbons. In the daily use of the fluid in dye casting machines, the system should be leak-proof so that there is not day-in and day-out exposure to the vapors liberated if the fluid drips onto heated metal surfaces.

In the event of a broken hydraulic line where the fluid might be sprayed onto heated or molten metal, significant quantities of the fluid itself will be evolved into the atmosphere as vapors. These in themselves are not harmless. Depending on the temperatures involved, the amount of fluid reaching the heated surfaces, etc., the fluid may be broken down to phenolics or cresols, aldehydes, CO, CO_2, and hydrochloric acid. Experiments with animals and practical experience where accidental breakage has occurred, indicates that the irritation to the eyes and respiratory tract from the HCl and the vapors of the fluid itself are so irritating that persons will not voluntarily expose themselves to seriously toxic concentrations. Where accidents have occurred, workers have been able to shut down equipment before evacuating the contaminated atmosphere.

Proper respiratory protection to re-enter the contaminated area should be aimed at removing acid gases and organic vapors. There has been no indication that carbon monoxide levels have been sufficiently high to be a major factor in the length of time that a worker wearing respiratory protection would be exposed.

COMPANY
CONFIDENTIAL

TRAN 055462

EXHIBIT NO. 226
5/13/92

WATER_PCB-SD0000077736

If I can be of any further assistance, please do not hesitate to let me know.

Very truly yours,

Elmer P. Wheeler
Assistant Director
Medical Department

EPW:af

COMPANY
CONFIDENTIAL

TRAN 055463

WATER_PCB-SD0000077737

October 11, 1965

Mr. William T. McCormick
Inland Steel Company
East Chicago, Indiana 46312

Dear Bill:

Confirming our telephone conversation this morning, I am forwarding information relative to the toxicity and safe handling of our fire resistant hydraulic fluid Pydraul 312.

This is a new member of our Pydraul series and consists of chlorinated biphenyl, a phosphate ester, and a high viscosity selected petroleum fraction of low volatility. Our label for this product contains the following precautionary statement:

CAUTION!
Contains Chlorinated Hydrocarbons.

Avoid prolonged breathing of vapors or mists.
Avoid contact with eyes or prolonged contact with skin.
If skin contact occurs, remove by washing with soap and water. Following eye contact flush with water.
If clothing becomes soaked with fluid, launder before wearing again.

I am enclosing a copy of the range finding toxicity data obtained by our consultant, Younger Laboratories. There is also enclosed a table comparing these data with similar figures on our older fluids, Pydraul F-9, A-200 and 150. I recall that some time ago I provided you and George with a copy of the work done by Dr. Treon of the Kettering Laboratories on Pydraul F-9. The report of Joe's study dealt principally with the acute toxicity of decomposition products when the fluid was sprayed or allowed to drip on Inconel surfaces heated to 1050° and 1250°F. I believe you and George agreed with our interpretation that the hazard from the accidental occurrence of a hydraulic line rupturing and spraying onto molten metal was not as great as if a non-fire resistant fluid might be involved in a similar accident.

Experience with the other members of the Pydraul series indicates that they should be used in a system as free from leaks as possible. This is particularly important if the fluid is at elevated temperatures where components of the

COMPANY CONFIDENTIAL

TRAN 056827

Transwestern
EXHIBIT NO. 227
5/13/92 km

WATER_PCB-SD0000077738

formulations may be volatilized into the work room. At ambient temperature the vapor pressures are such that there are no significant vapor inhalation hazard.

We recommend the avoidance of repeated and prolonged skin contact principally because the fluids are good solvents for the natural oils and fats on the skin. The removal of these natural "barriers" can lead to drying and cracking.

I hope to have an opportunity to discuss any questions you may have with you in Pittsburgh at the time of the Foundation meeting. If I can add any additional information in the meantime, please let me know.

Best personal regards.

Very truly yours,

Elmer P. Wheeler
Manager, Environmental Health
Medical Department

EPW:mjb

cc: Dave Kenner, Monsanto Chgo Office

bcc: Dale Smith

COMPANY
CONFIDENTIAL

WATER_PCB-SD0000077739

7/ 2

BCC W. F. Conant-Atlanta
H. F. Lovejoy-Atlanta
J. F. Smith-G.

December 16, 1959

Mr. J. W. Weber
President
Dixie Diecasting Company
Reidsville, North Carolina

Dear Mr. Weber:

I have been asked to forward information relative to the toxicity of Pydraul F-9 and Pydraul A-200.

There is enclosed data entitled, "The Discussion and Interpretation of Pydraul F-9 Toxicity Studies" which supplements the summary which appears on page 18 of the enclosed Pydraul F-9 technical bulletin.

In the case of Pydraul A-200, our interpretation of the toxicity data obtained on this newer synthetic hydraulic fluid is that accidental ingestion is not a particular hazard in view of the high oral lethal dose (Oral LD50: 10,500 mg/kg). Similarly, single massive skin exposures should not be immediately hazardous (Skin MLD: 625 to 1,250 mg/kg). The lethal dose following skin penetration is such, however, that prolonged and repeated skin contact should be avoided. Such exposure must also be avoided to prevent skin irritation. We also feel that vapor inhalation should be avoided when the fluid is at elevated temperatures. Such exposure again relates to prolonged or repeated exposures rather than massive or acute exposure. In the case of the latter, workmen would probably not voluntarily subject themselves to concentrations that are hazardous for short periods.

In general, I would say that the low degree of hazard is characteristic of both of these materials.

If I can be of any further help, please let me know.

Very truly yours,

Elmer P. Wheeler
Assistant Director
Medical Department

EPW:dh
Enclosures 2

TRAN 055407

COMPANY
CONFIDENTIAL

Transwestern
EXHIBIT NO. 228
5/13/92 [illegible]

June 7, 1962

Mr. Thomas Dunlop, Jr.
Industrial Prod. Department
Shell Chemical Corporation
50 West 50th Street
New York 20, New York

Dear Mr. Dunlop:

Mr. Smith has asked me to reply to a question raised in your recent correspondence with him relative to the toxicity and safety of Pydraul A-200.

I have attached a summary of animal toxicity data and our interpretation of such data as it might apply to workmen exposed to vapors of this fluid. The last paragraph refers to a situation where the fluid might be sprayed on heated surfaces resulting in either vaporization of the fluid and/or the evolution of decomposition products depending on the temperature of the heated surfaces.

It is our opinion that the vapors or decomposition products from Pydraul A-200 would be no more toxic than those arising from other Pydraul fluids. Without any decomposition, high concentrations of Pydraul A-200 vapors would be irritating to the eyes and respiratory tract. Since one of the chief decomposition products would be HCl, obviously the decomposition would be even more discomforting. The spraying of the fluid on heated surfaces as the result of accidental line breakage or failure, results in the creation of an atmosphere that workmen will not tolerate voluntarily without respiratory protective devices. This in itself limits the exposure to seriously toxic concentrations.

We do not intend to imply that Pydraul A-200 should be used in such a fashion that there is continuous leakage of the fluid when it is at elevated temperatures. Continuous inhalation of vapors should not be condoned. This fact is

COMPANY CONFIDENTIAL

TRAN 055445

Transwestern
EXHIBIT NO. 229
5/13/92

WATER_PCB-SD0000077741

emphasized by the statements on our labels which indicate that the fluid contains chlorinated hydrocarbons" and recommend the avoidance of prolonged breathing of vapors or mists or prolonged contact with the skin. Such precautionary statements appear on all of our Pydraul fluids which contain chlorinated hydrocarbons.

Very truly yours,

Elmer P. Wheeler
Assistant Director
Medical Department

EPW:sg
Enclosure
CC: Mr. D. F. Smith
Monsanto Chemical Company
800 N. Lindbergh Blvd.
St. Louis 66, Missouri

COMPANY
CONFIDENTIAL

TRAN 055446

WATER_PCB-SD0000077742

Monsanto

FROM (NAME & LOCATION) St. Louis - General Offices

DATE January 25, 1967

SUBJECT PROTECTIVE GLOVES RESISTANT TO AROCLOR AND ASKARELS

REFERENCE

TO :

C. L. Bradford - CBRAD
Los Angeles - D. E. Eriksen
Wilmington - H. A. Gilbert
New York - G. R. Graham
Cleveland - D. A. Hall
Atlanta - R. C. Hamil
Chicago - D. L. Hosmer
New York - W. G. Martin
Cincinnati - R. C. Meyer
Los Angeles - D. R. Pogue
BRAZIL - Dr. Jose F. Valente
BRUSSELS - David Wood
BRUSSELS - V. J. Heroufosse
BRUSSELS - D. S. Cameron
BRUSSELS - Alolpho Arpino
BUENOS AIRES - Dr. F. D. Manfrin
GERMANY - K. M. Selk
LONDON - T. Denton-Roberts
LONDON - P.J.A. Marsh
LONDON - R. G. Birrell
LONDON - W. H. Ritchie
MEXICO - F. J. Camargo
MEXICO - Jaime Lomelin
MEXICO - J. C. Morales
MEXICO - Alfonzio De Leon
MONTREAL - S. L. Harris
MONTREAL - T. W. Oneson
MONTREAL - R. S. Trump
MONTREAL - N. Reimer
MONTREAL - W. T. Wither
TORONTO - J. G. Edmiston
TORONTO-W.P.B. Gedye
RUABON - Colin R. Coleman
RUABON - A. A. Jones
RUABON - W. McG Morgan
NEWPORT - F. MacDonald
VANCOUVER BC - T. Ebbett

cc Atlanta - J. D. Wright
Chicago - A. G. Bades
Cincinnati - J. J. Feeks
Cleveland - J. R. Elwood
Detroit - J. R. Fallon
Everett - B. B. Langton
Houston - D. H. Beohtold
Los Angeles - P. T. Nemits
New York - H. W. Anway
Pittsburgh - H. O. Jacobsen
J. K. Lilly - JLILL
Santa Clara - J. G. Hicks
Seattle - A. W. Hempelmann
Wilmington - R. P. Sullivan
New York - P. L. Slayton
G. R. Buchanan
R. Davis
D. F. Smith
D. E. Roush
S. Shaw
W. R. Richard - SECOND STREET
R. Munch - SECOND STREET
H. S. Bergen - HBERG
R. A. Geisman - QUEENY
R. G. Moody - ANNISTON
[redacted]
Burn Severson - ANNISTON
Don Harris - KRUMMRICH
Dallas C. Armstrong - KRUMMRICH
J. R. Kuster - KRUMMRICH
Paul E. Heisler - KRUMMRICH
Elmer P. Wheeler - EWHEE (Med)
Jack T. Garrett - JGARR (Med)
Emmet R. Kelly - EKELL (Med)
Gerald Miller - ANNISTON

TRAN 056177

IM-10 REV. 11-66

Transwestern
EXHIBIT NO. 230
5/13/92

WATER_PCB-SD0000077743

Through the years there never has been a suitable "rubber" glove for handling liquid Aroclor and askarels.

Recently Du Pont showed us relatively thin and comfortable gloves made from Du Pont Viton by the Pelmor Laboratories, Inc., 401 Lafayette Street, Newton, Bucks County, Pennsylvania.

We understand such gloves are available made entirely from Viton, or a Viton exterior laminated to Neoprene interior surface. The cost is about $8.00 a pair.

The Pelmor Laboratories also offer a "spray can" of Viton. This spray-on Viton material seems to adhere quite well to most all surfaces. It would appear of interest to coating leaky gaskets and seals.

P. G. B.

P. G. Benignus

/ecd

WATER_PCB-SD0000077744

18

Monsanto

ORGANIC CHEMICALS DIVISION

Monsanto Company
800 N. Lindbergh Boulevard
St. Louis, Missouri 63166
Phone: (314) 894-1000

January 7, 1970

Mr. Walter Woods
Texas Eastern Transmission Corporation
P. O. Box 1612
Shreveport, Louisiana 71102

Dear Walter:

This will confirm our January 5 telephone conversation concerning the name change of MCS 153 to TURBINOL 153. This name change reflects absolutely no change in the product.

As discussed it might be helpful to operating personnel at your various stations to see a drum label showing the new name. Thirty of these labels are enclosed for necessary distribution. Please notice we have indicated on the label the terminology "Formerly MCS 153". Hopefully this will also smooth the transition process from MCS to TURBINOL.

The most recent order for this fluid has reduced our inventory to three drums showing the old name. A new production run will be made within the next several days and all drums will be labeled TURBINOL 153.

We are in the process of working on new fluids for the steam and gas turbine industry. Hopefully some of these products may be of interest to you. With this idea we wanted to adopt a unique tradename for the turbine line of fluids and thus the registered trademark TURBINOL. If there is anything further we can do to help in the fluid area, and particularly in the name change, please let us know. Best personal regards for all the best in the new year.

Very truly yours,

D. F. Smith
Industrial Fluids

Enclosure

CC: W. Worley J. Gilcrease - Shreveport
O. M. Fletcher - Houston

RECEIVED
JAN 7 - 1970
COMPRESSOR STATIONS DEPARTMENT

Transwestern
EXHIBIT NO. 231
5/13/92 Pr

000810045

TW2-2006687

WATER_PCB-SD0000077745

J.H. Davidson - Los Angeles
R.A. Garcia - Akron
NTJ/DRP

August 14, 1970

Mr. A.R. Tucker
Solar Division
International Harvester Company
2200 Pacific Highway
San Diego, California 92112

Dear Mr. Tucker:

This will confirm our August 13th telephone conversation concerning Turbinol 153 use in gas turbines. We are pleased to enclose a data sheet on this product. A new technical bulletin on Turbinol 153 is being printed and should be available soon.

Earlier this year we corresponded with Mr. J.W. Gleasner at Solar on this subject. A copy of our letter to Mr. Gleasner is enclosed. We have had several conversations with Solar personnel on this subject in the last 12 months. No doubt Jerry Davidson, our fluids specialist responsible for the San Diego area will be able to discuss these other contacts when he calls or visits you. He is located in our Los Angeles office (213-723-2492) at 6670 E. Flotilla Street. Also enclosed is a copy of a technical paper by Earl Farmer, Texas Eastern Transmission Corporation, on the subject "Fire Resistant Lubricants in Gas Turbines." This paper was presented at the 1970 annual meeting of A.S.L.E.

Please let us know how we can be of further assistance.

Very truly yours,

D.F. Smith

lb

Enc. 3

Transwestern
EXHIBIT NO. 232
5/17/96

COMPANY
CONFIDENTIAL

WATER_PCB-SD0000077746

Monsanto

FROM (NAME & LOCATION) N. T. Johnson St. Louis

DATE February 16, 1970

SUBJECT

REFERENCE

POLLUTION LETTER

TO :

P. Craska - Wilmington
C. Clay - St. Louis
J. H. Davidson - Los Angeles
R. A. Damiani - Chicago
G. F. Fague - Detroit
R. A. Garcia - Akron
R. Garnsworthy - Melbourne
J. A. Heilala - Akron
R. Irwin - Houston
J. S. Pullman - New York
J. J. Roder - Chicago
R. Giles - Melbourne

cc:

P. J. A. Marsh - Brussels
R. Enrhardt - New York
T. W. Oneson - Montreal
J. N. Haggart - Brussels
V. Morse - St. Louis
J. Brydon - Montreal
R. Graham - New York
P. G. Benignus
J. G. Bryant
D. E. Roush
J. R. Fallon
D. A. Hall
D. R. Pogue
D. F. Smith
D. A. Olson

Attached is a list of questions and answers which may be asked of you by customers receiving our Aroclor-PCB letter. You can give verbal answers; no answers should be given in writing. If the customer asks a question you can't answer or if he wants an answer in writing, then send his questions to me and we will answer from here.

We want to avoid any situation where a customer wants to return fluid. The new reformulated products will be available within a month. We would prefer that the customer use up his current inventory and purchase Pydraul 625A, Pydraul ACA, Pydraul ACA Winter Grade and Pydraul 540A when available. He will then top off with the new fluid and eventually all Aroclor 1254 and Aroclor 1260 will be out of his system. We don't want to take fluid back. Sell him the replacement.

We must be very positive in our approach with each customer relative to our decision to eliminate the use of Aroclor 1254 and Aroclor 1260 in our Pydraul products. We (your customer and Monsanto) are not interested in using a product which may present a problem to our environment. We certainly have no reason to be defensive or apologetic about making this change. The decision to change makes good sense and our customers should commend us, not criticize our actions. No one has forced us to make this

IN-18 REV. 11 68

Transmission
EXHIBIT NO. 233
5/13/92

TRAN 085833

233

WATER_PCB-SD0000077747

change. We have done it to keep our customers out of possible trouble. They should appreciate our effort, and stay with us as a customer on the reformulated Pydrauls. To make this change has cost us research monies and time. Fortunately, we possess the technical skills to make a change in our formulations without affecting the performance of products. Be positive, Take the offense. Don't let a customer or competitor intimidate you. I doubt if our competitors know whether their product could present a problem to our environment. You might ask your customer, if he has ever asked Houghton or Stauffer, Carbine, etc. about the effects of their products.

We should also recognize (point this out to your customer) we must clean-up. The Chemical Week article gives him an idea of laws in effect in his state. Read this yourself. Be familiar with the data on each state in which your customers are located. Use this in your discussions.

We have no replacement products for Aroclor 1254 and Aroclor 1260. We will continue to make these products; however, customers will have to use their own judgement on continued use.

We can't afford to lose one dollar of business. Our attitude in discussing this subject with our customer will be the deciding factor in our success or failure in retaining all our present business. Good luck.

(We have also attached a copy of the letter sent to transformer customers.)

N. T. Johnson

lb

WATER_PCB-SD0000077748

Monsanto

ORGANIC CHEMICALS DIVISION

Monsanto Company
800 N. Lindbergh Boulevard
St. Louis, Missouri 63166
Phone: (314) 694-1000

February 9, 1970

Dear Sir:

Recently several newspaper and magazine articles have been published indicating that Polychlorinated Biphenyls (PCBs) have been discovered at some points in some marine, aquatic and wildlife environments. The quantities detected are said to be in the parts per million and parts per billion categories.

It is claimed that the PCBs found strongly resemble chlorinated biphenyls containing 54% and 60% chlorine by weight. Products which are sold by Monsanto under the trade names of Aroclor® 1254 and 1260 do contain chlorinated biphenyls. In addition to Aroclor® 1254 and 1260, Monsanto sells certain functional fluids containing Aroclor® 1254. These include Pydraul® 625, Pydraul® AC, Pydraul® AC - Winter Grade, Pydraul® 540, Therminol® FR-3 and certain dielectric formulations. Several other companies around the world also produce products containing chlorinated biphenyls.

As your supplier of Aroclor® 1254 and 1260 and formulated products containing 1254, we wish to alert you to the potential problem of environmental contamination as referred to in the newspaper and magazine articles.

We would like to point out the following additional facts.

1. Products such as Pydraul® 90, 135, 230, 312, A-200, F-9, 150 and 60, Turbinol® 153 and Therminol® FR-1 and FR-2 are not formulated with Aroclor® 1254 or 1260.

2. PCBs with a chlorine content of less than 54% have not been found in the environment and appear to present no potential problem to the environment.

TRAN 085835

WATER_PCB-SD0000077749

We have developed, and are now testing, new formulations to replace the Aroclor® 1254 and 1260 components in our Pydraul® products. The new products appear to be equal in performance and to have similar physical properties.

We feel that all possible care should be taken in the application, processing and effluent disposal of these products to prevent them becoming environmental contaminants. Of interest to you may be an article in Chemical Week, October 29, 1969 regarding water pollution standards set by each state in the Union. It is attached. This article reflects that good manufacturing practice in the future may require that no products used by any company should find their way into waterways.

Sincerely yours,

Donald A. Olson
Director of Sales
Functional Fluids Group

nlc
Attachment

WATER_PCB-SD0000077750

Monsanto

ORGANIC CHEMICALS DIVISION

Monsanto Company
800 N. Lindbergh Boulevard
St. Louis, Missouri 63166
Phone: (314) 694-1000

February 18, 1970

Dear Sir:

Recently several newspaper and magazine articles have been published indicating that Polychlorinated Biphenyls (PCBs) have been discovered at some points in some marine, aquatic and wildlife environments. The quantities detected are said to be in the parts per million and parts per billion categories.

It is claimed that the PCBs found strongly resemble chlorinated biphenyls containing 54% and 60% chlorine by weight. Products which are sold by Monsanto under the trade names of Aroclor® 1254 and 1260 do contain chlorinated biphenyls. In addition to Aroclor® 1254 and 1260, Monsanto sells certain functional fluids containing Aroclor® 1254. These include Pydraul® 625, Pydraul® AC, Pydraul® AC - Winter Grade, Pydraul® 540, Therminol® FR-3 and certain dielectric formulations. Several other companies around the world also produce products containing chlorinated biphenyls.

As your supplier of Aroclor® 1254 and 1260 and formulated products containing 1254, we wish to alert you to the potential problem of environmental contamination as referred to in the newspaper and magazine articles.

We would like to point out the following additional facts:

1. Products such as Pydraul® 90, 135, 230, 312, A-200, F-9, 150, and 60, Turbinol® 153 and Therminol® FR-1 and FR-2 are not formulated with Aroclor® 1254 or 1260.

2. PCBs with a chlorine content of less than 54% have not been found in the environment and appear to present no potential problem to the environment.

TRAN 085837

WATER_PCB-SD0000077751

We have developed, and are now testing, new formulations to replace the Aroclor®1254 and 1260 components in our Pydraul® products. The new products appear to be equal in performance and to have similar physical properties.

We feel that all possible care should be taken in the application, processing and effluent disposal of these products to prevent them becoming environmental contaminants. Of interest to you may be an article in Chemical Week, October 29, 1969, regarding water pollution standards set by each state in the Union. It is attached. This article reflects that good manufacturing practice in the future may require that no product used by any company should find their way into waterways.

We realize that you have marketed or may now market transformers and other electrical equipment containing dielectric fluids which include Aroclor® 1254 and 1260. Although these fluids are sealed into such equipment it is recognized that occasionally the fluid may be lost through leaks resulting from equipment misuse or equipment repair necessitating replacement of the fluid. Since the dielectric fluid contained in this equipment is only an incidental part of the over-all unit manufactured by you, we are not notifying the purchasers of such equipment of the potential environmental contamination problem described in this letter. We do recommend, however, that you notify such equipment users of this problem.

Sincerely yours,

Don Olson

Donald A. Olson
Director of Sales
Functional Fluids Group

lb

Attachment

WATER_PCB-SD0000077752

POSSIBLE CUSTOMER QUESTIONS ON PCBs

PUBLICITY

Question 1

What articles have appeared on the PCB problem?
Will you send me copies?

Answer:

In the U.S., newspaper articles have appeared in the San Francisco Chronicle on Feb. 24, 1969, the San Francisco Examiner on Feb. 25, 1969, and the Hartford Times on Aug. 3, 1969. Numerous articles were generated by the Wisconsin "DDT Hearings" in May, 1969. At the hearings, witnesses discussed the problem of PCBs as "interfering substances" in their search for DDT in the environment. PCBs, they said, produced peaks on a gas chromatograph similar to the peaks produced by DDT. In no case was PCB indicted at the Wisconsin hearings.

Copies of the articles will be made available on request. Regional managers should contact E. V. John, Public Relations Manager Organic Chemicals Division, in St. Louis and copies will be forwarded to the customer through the regional manager's office.

In addition to the newspaper articles mentioned above, there have been radio broadcasts. At the time of the San Francisco Chronicle and Examiner articles, radios in the San Francisco area also carried the story. In August, the sports editor of the Hartford Times syndicated a radio broadcast on the subject of PCBs, and in Dec., 1969, the Canadian Broadcasting Co. (radio) carried an interview they taped with a member of our medical department.

Question 2

Were Monsnato's Aroclors specifically mentioned in these articles?
If so, which ones?

WATER_PCB-SD0000077753

Answer

Monsanto's Aroclors were mentioned in some of the articles but only in the San Francisco Chronicle story in Feb., 1969, was Aroclor 1262 specifically mentioned by number. In several of the articles, Monsanto was also identified as the sole U.S. producer of polychlorinated biphenyls, marketed under the tradename of Aroclor.

Question 3

What did the articles on the PCB problem say?

Answer

Since the outset of the "PCB problem", when the first article appeared in the U.S. press in Feb., 1969, the whole question has been closely interwoven with the question of DDT as a possible environmental contaminant.

The San Francisco Chronicle article carried a headline, "A Menacing New Pollutant." In rather sensational style, it identified PCB as a threat to birds and humans, highly toxic in a gaseous state and related to known cancer-causers. PCB presence in the environment is rising swiftly, the article stated.

The Examiner article called PCB a "plastic pollutant in the Bay and Mothers' Milk." This article called PCB an "alarming" new chemical pollutant that is playing a role in the declining peregrine falcon population, has been found in mothers' milk, and is the "latest addition to a growing list of chemicals in the ocean---- the newest symptom of man's chemical invasion of the ocean."

These two articles quoted Dr. Robert Risebrough, a researcher at the Institute of Marine Resources in the University of California's Department of Nutritional Scientists, on the detrimental effects of PCBs. Later Dr. Risebrough said he had been misquoted in some newspaper stories.

The Hartford Times story called PCB pollution a "new puzzle." Less sensational than the San Francisco articles, the Times gave an account of PCBs being found in the environment and the studies under way to determine their biological effects. This article, says Dr. Risebrough, tends to clear PCB of blame.

WATER_PCB-SD0000077754

Articles generated by the Wisconsin DDT hearings generally discussed PCB as an interfering substance discovered in scientists' search for DDT in the environment. Dr. Risebrough said at the hearings that there was no proof at the moment that PCB alone can cause thin eggshells, one of the phenomenon that he had discovered in studying the declining population of the peregrine falcon.

LEGISLATION

Question 1

Are there any Federal/State/local laws under which the use or discharge of Aroclors could be prohibited?

Answer:

No existing Federal, State, or local laws prohibit the discharge of Aroclors. However, in a number of states the basic water pollution control legislation is so broad that state agencies can prohibit chemicals, deemed necessary, from being discharged.

Question 2

Is the DDT and the PCB problem related?

Answer:

We are not a manufacturer of DDT or other chlorinated hydrocarbon pesticide and, therefore, have no knowledge of the seriousness of the charges against DDT other than what has been so widely publicized on TV, in the press and in technical journals. To the extent that both DDT and PCB are chlorinated hydrocarbons, then there is a similarity. They are sufficiently different in their chemical structures, however, that it would be entirely wrong to assume that both behave in the same way in the environment. There is another and more obvious difference. DDT and other chlorinated hydrocarbon pesticides were specifically designed for a job that obviously leads to their being scattered in wide spread fashion across the countryside. Rain, birds, wind, insects further scatter these pesticides in an uncontrollable manner. PCBs are not used in this fashion and

WATER_PCB-SD0000077755

Monsanto has never sought to promote this. This, we believe, is an important distinction that should not be overlooked if DDT and PCB are linked as a common pollutant of the environment. To our knowledge PCBs have never been identified in the absence of DDT or other chlorinated hydrocarbon pesticides.

Question 3

Could it be PCB that's causing the environmental problems and not DDT?

Answer:

We believe that present-day GLC and mass spectrometric techniques are sufficiently accurate to be able to differentiate between DDT, related pesticides, their metabolites and PCB.

Question 4

What authority do State and local governments have in banning/controlling the use of PCBs.

Answer:

They do have authority to ban or control use of any substances they consider harmful.

EFFLUENT AND ITS CONTROL

Question 1

How do I dispose of Aroclor 1254/1260, etc. effluent from my plant?

Answer:

We would suggest collecting all process effluent, equipment washings, tank or drum washings and then regularly taking to the nearest toxic materials dump. You may also be able to use a sanitary landfill if permits are issued for this in your locality. We don't recommend feeding this material to local sewage treatment plants or taking out to sea in drums for dumping. These methods do not

WATER_PCB-SD0000077756

solve the problem of contamination. We are working on the disposal of these materials by incineration and biodegradation. Our work in these areas has not yet reached the stage where we can offer practical suggestions. It is of interest to note, however, that research is underway fo find catalysts to make DDT self-destructive. The possibility exists that we could find catalysts that would destroy PCBs in settling tanks constructed to catch all your effluents.

Question 2

Can I test my effluent to see if my effluent has no Aroclor 1254, etc. ?

Answer:

Yes. Analytical equipment is available that can do this if the proper technique is used. The basis of the method is GLC or gas liquid chromatography. Are you or anyone in your company familiar with this? Do you have GLC equipment? If you do, we can send you a description of a method that could identify PCB. If not, there may be a good analytical testing laboratory in the vicinity where you could send samples and rely on the results if you want to test your effluent.

Question 3

What is a "safe" PCB level for effluent leaving my plant?

Answer:

As our letter points out, parts per million (ppm) and parts per billion (ppb) have been mentioned in the published articles. There is still a lot of doubt as to how absolute any quoted values are. To bring this into the realms of reality, this definition of ppm and ppb may help clarify things.

To give you a practical example, the escape of one-two gallons per day could lead to samples in a stream beside the plant showing 10-50 ppb on analysis.

WATER_PCB-SD0000077757

Question 4

You must have quite a control problem at your plants--I would think Monsanto's Aroclor plants are the major polluters--how are you handling control?

Answer:

The Aroclor products we make to sell at a profit, so economics dictate maximum housekeeping, minimum loses. The Aroclor process is a "dry process" or closed system.

Question 5

How does Monsanto think Aroclors can get into the environment and cause so much pollution?

Answer:

Disposal, leakage from systems using it, spills, etc.

Question 6

If I analyze my effluent stream and find ppb there, how do I know it didn't come from air-borne contamination or was present in the process water that I pump from the XYZ river into my plant?

Answer:

Analyze water entering your plant and compare. There is a method available for sampling air.

Question 7

You seem to think from the tone of your letter that the source of pollution is from effluent disposal into streams. In my process, Aroclor 1254, 1260, etc. vapors escape. What precautions can I take to prevent (a) employee problems and (b) escape of vapors into the atmosphere?

WATER_PCB-SD0000077758

Answer (7):

Articles on PCB interference with pesticides analysis have mentioned the possibility of loss to the atmosphere from vaporization when Aroclors are heated. We find this hard to believe and it warrants considerable investigation.

TOXICITY

Question 1

If PCB is a danger to fish and birds, how about humans?

Answer:

The amounts being found in the environment are not considered a danger to humans or fish. The whole question on chlorinated pesticides relates to birds.

Question 2

Are Aroclor 1254/1260, etc. more toxic than other Aroclors? Why?

Answer:

There is a difference in toxicity depending on degree of chlorination. This is not to say that higher chlorination is more toxic than lower chlorination. The alleged PCB problem is not really related to degree of toxicity.

DIFFERENCES BETWEEN AROCLORS

Question 1*

In your letter, you state that Aroclor® 5060, 5442 and 5460 are not PCBs. What are they?

Answer:

They are chlorinated terphenyls.

WATER_PCB-SD0000077759

Question 2*

What's the difference between a chlorinated biphenyl and a terphenyl?

Answer:

A terphenyl has three benzenes linked together and biphenyl only two. They are, therefore, similar but different, just as naphthalene is different from benzene.

Question 3*

Why should PCB be an environmental contaminant and chlorinated terphenyls not?

Answer:

I don't think there is any positive answer on this and I can't give you any theories. However, I would emphasize that not all PCBs appear to be contaminants. Those such as Aroclor 1221, 1232, and 1242 haven't been identified in marine, aquatic and wildlife environments. Chlorinated terphenyls - at least those made by Monsanto - have not been identified in the environment either.

Question 4

Since you sell other PCBs beside Aroclor 1254 and 1260, why are they not found in the environment?

Answer:

One reason could be that they biodegrade and hence never build up to a level where they can be labelled persistent contaminants. Therefore, although you would find it in an effluent stream if you analyzed it just after you poured PCB into it, its absence when a river, for example, is analyzed downstream at a later date would indicate degradation by bacterial organisms.

We are actively working on this aspect of biodegradability in our laboratories at this time. Results of this type of work won't come to hand quickly but our preliminary work on PCBs of less than 54% chlorine looks promising.

WATER_PCB-SD0000077760

Question 5

In your letter, you make no mention of Aroclor 1262 and 1268. What is their status?

Answer:

It could be that their semi-solid/solid water insoluble nature means they are far, far less likely to become "mobile" contaminants. It could be that their structural differences from Aroclor 1254 and 1260 are responsible for the apparent lack of a problem. In any event, they have not been identified by scientists in the environment and--believe me-- a lot of scientists seem to be looking for PCBs.

Question 6*

Both Aroclor 5460 and 1260 contain 60% chlorine. Why is one a problem (1260) and apparently not the other (5460)?

Answer:

A terphenyl has three benzenes linked together and biphenyl only two. They are, therefore, similar but different, just as naphthalene is different from benzene.

I would emphasize that not all PCBs appear to be contaminants. Those such as Aroclor 1221, 1232, and 1342 haven't been identified in marine, aquatic and wildlife environments. Chlorinated terphenyls--at least those made by Monsanto--have not been identified in the environment either.

Question 7*

Does this PCB problem mean that you have discontinued efforts to get Aroclor 5460 approved by FDA?

Answer:

No.

WATER_PCB-SD0000077761

Question 8*

Is the reason for not resubmitting your petition to the FDA for approval of Aroclor 5460 due to this PCB publicity?

Answer:

No.

Question 9

What's the problem then?

Answer:

We are bringing a new solid Aroclor plant on-stream in the next two-three months. We want to make sure it produces the same quality Aroclor 5460 we used in our feeding studies for the FDA. Once we're sure that's O.K. -- and we feel it will be--then we'll get the petition moving again but FDA clearances do take time.

Question 10

Does this PCB publicity mean that FDA approval of Aroclor 5460 is not going to be obtained?

Answer:

We have no reason to think the two things are related. Aroclor 5460 is not chemically a PCB. The delay resulted from the need to set up certain analytical methods to satisfy FDA. This involved analytical instrumentation and is being completed now. It is my understanding we plan to resubmit our petition although I personally don't know the exact date.

CONTAINERS

Question 1

Joe Doe buys all my used Aroclor drums without me having to wash them. I get $3.00 a piece. I can't afford to wash them out. Even if I did, what would I do with the washings?

WATER_PCB-SD0000077762

(Question 1 con't)

What should I do? Should I tell Joe Doo? Will Monsanto take them back or pay me $3.00 plus my costs to take them to a dump?

Answer:

Don't have an answer at this time. We just don't know.

APPLICATIONS

Question 1*

Could Aroclor 1254/1260 escape from my sealant/adhesive/coating whatever into the environment?

Answer:

This will depend entirely on the final use to which your product is used--its ultimate disposition.

Question 2*

My product X contains Aroclor 1254/1260. What should I tell my customers?

Answer:

Tell your customer--We want to advise you of a possible environmental problem. Without knowing what your customer does with product X, this is hard to answer. (We would say that it would not seem wise to use Aroclor 1254 or 1260 for keeping dust down on the roads, for use in dental sealing compounds or as carriers for pesticides.)*

*Only if you suspect or are told this is what the application is.

Question 3

Does Monsanto intend to continue manufacture of Aroclor 1254/1260, etc.?

WATER_PCB-SD0000077763

Answer (3):

I have been given no indication otherwise.

Question 4*

Should I look for replacement for Aroclor 1254/1260, etc. ?

Answer:

I think only you can decide this. How easy would this be for you? Do you have any other replacement product in mind?

Question 5*

Does Monsanto have replacement products for Aroclor 1254 and 1260?

Answer:

As you know, we have over eighty plasticizers in our line and there's quite a bit of product interplay so it is possible that there is another product in our line that might replace them. What resin do you use? Perhaps we could look at these resin/plasticizer Selector Charts in the back of the Blue Book. I've got it with me.

Question 6*

Is Monsanto working on replacements for Aroclor 1254 and 1260?

Answer:

These research fellows are always busy on things like that. To some people Aroclor 1254 and 1260 have draw-backs.-- quite apart from present publicity on PCB. Aroclor 1254 is fairly volatile. Aroclor 1260 is very viscous and difficult to handle. For polysulfide sealants, for example, the technical people in St. Louis have just sent us data on products that will behave better than Aroclor 1254 in polysulfide sealants. Maybe there's something here for you to look at. Let's go over it.

WATER_PCB-SD0000077764

Monsanto

Monsanto Company
800 N. Lindbergh Boulevard
St. Louis, Missouri 63166
Phone: (314) 694-1000

June ~~May~~, 1970

Direct Customer

Dear Customer:

You have received our letter mailed February 27, 1970 notifying you of the allegations that certain polychlorinated biphenyls (PCBs) had been found in the environment and were contaminants. Since that time, other reports concerning PCBs have been published. An examination of the PCB matter has indicated that their use in synthetic resin compositions may be a source of the alleged environmental contamination.

Monsanto has sold PCB-containing materials under the trade name of Aroclor®. These Aroclors® included:

Aroclor® 1232
Aroclor® 1242
Aroclor® 1248
Aroclor® 1254
Aroclor® 1260
Aroclor® 1262
Aroclor® 1268
Aroclor® 4465
Aroclor® 1100 Series
Montar® 1

Toluene or xylene blends of the above products also contained PCB.

TRAN 006633

Transwestern
EXHIBIT NO. 234
5/13/92 [illegible]

WATER_PCB-SD0000077765

In review of the allegations which have been made concerning PCBs, and being a concerned and responsible member of the world community, we have come to a decision to discontinue the sale of PCB-containing products for modifier and plasticizer applications effective August 30, 1970.

Recognizing that this action will result in research effort on your part to find adequate replacements, we have prepared a series of data sheets outlining suggested alternatives for most applications. Copies of the report for your application may be obtained by calling the regional office closest to you as shown on the attached sheet.

We urge that you consider initiating now any necessary work on your part to effect the change to a new material. We stand ready to assist you in any way possible.

Very truly yours,

W. E. Schalk
Director of Sales
Plasticizers

/dbw

Attachment

WATER_PCB-SD0000077766

MONSANTO COMPANY
REGIONAL SALES OFFICES

Akron Marketing & Research Center
260 Springside Drive
P. O. Box 5444
Akron, Ohio 44313
(216) 666-4111

Chicago Sales Office
3158 Des Plaines Avenue
Des Plaines, Illinois 60018
(132) 296-6688

Boston Sales Office
Everett Station
Boston, Massachusetts 02149
(617) 387-5010

New York Sales Office
277 Park Avenue
New York, New York 10017
(212) 922-4111

St. Louis Sales Office
800 North Lindbergh
St. Louis, Missouri 63166
(314) 694-1000

Wilmington Sales Office
2005 Concord Pike
Wilmington, Delaware 19803
(302) 658-6531

WATER_PCB-SD0000077767

PCB EXPOSURE CONTROL

1. PREMISE

Current data indicates that PCB type materials may be more hazardous to working personnel than had previously been considered. Based on these facts, the control of exposure of workers where PCB's are manufactured or used should be re-examined and made more restrictive. Currently the American Conference of Governmental Industrial Hygienists (ACGIH) shows threshold limit values for chlorodiphenyl (42% chlorine) (Arochlor 1242) of 1 mg/M^3 and for chlorodiphenyl (54% chlorine) (Arochlor 1254) of 0.5 mg/M^3. Very limited analysis in the Arochlor department indicates that the airborne concentrations are below these numbers.

The two routes of entry of importance in PCB manufacture and use are vapor inhalation and skin absorption. Although there is no evidence that skin absorption presents a significant hazard, it is probable that some absorption does occur. Since the vapor concentrations are quite low in the operating department that manufactures this product, some type of biological test is needed to determine if skin absorption is occurring, and if so, to what degree. An analytical program must be devised to determine if PCB analysis of the urine is feasible, and can be used as an exposure indicator.

TRAN 017181

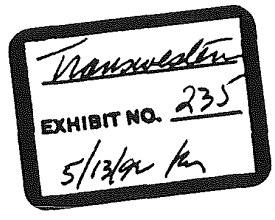

WATER_PCB-SD0000077768

2. RECOMMENDED METHODS OF CONTROL

A. Urine Analysis for PCB

If, indeed, PCB can be analyzed in human urine and levels can be determined that represent the very best operation from an exposure standpoint, a routine urine sampling program should be initiated with limits established for urinary PCB levels that are unacceptable.

B. Vapor Inhalation

Vapor inhalation is a problem only when Aroclor is heated above ambient temperature. Where vapor exposure is possible, air supplied respiratory protection must be worn. An airborne control limit for all PCB vapor exposure must be set as low as is practicable and certainly below the standard for PCB with the lowest TLV currently listed in 29 CFR 1910.93 which is chlorodiphenyl (54% chlorine) (Aroclor 1254). Routine air monitoring must be conducted.

C. Skin

Any operation, particularly maintenance operations, where liquid PCBs or PCB mists can come in contact with the skin, skin protection including gloves and suitable impervious clothing should be used. Where heated Aroclor is present resulting in vapor exposure, air supplied respiratory equipment and impervious clothing both must be

WATER_PCB-SD0000077769

used. For example, in maintenance work on a chlorinator that has been drained but is still hot, air supplied respiratory protection and impervious clothing should both be used.

D. Exposure Registry

An exposure registry must be established on all PCB workers. All urine sample results, if this method proves effective, all air sampling data must be recorded along with all appropriate health information. This registry would be a composite, therefore, of all medical and health data, all airborne exposure data, and all biological excretion data if appropriate. This registry should be so constructed that each individual employee can have available to him all data that pertains to him for examination or transfer to any subsequent employer.

E. Environmental Contamination

We would recommend that all means be exercised, either through engineering changes or through work practice changes to minimize environmental releases, either by air, water or through solid residues. In short, we would recommend that all means within the limits of economic feasibility be utilized to limit releases of these materials into the environment.

Jack T. Garrett

WATER_PCB-SD0000077770

WATER_PCB-SD000007771

Elmer P. Wheeler, Medical Department

January 29, 1970

J. S. Barrett, London
E. S. Bergen, [illegible]
W. B. Papageorge, WPAPA

Status of Aroclor Toxicological Studies

D. S. Cameron
Brussels

Enclosed is a copy of the reports from our consulting laboratory indicating the status of the animal toxicity studies. I have summarized the pertinent findings separately and as indicated in the table.

We have given copies of these data to one U. S. customer, the U. S. FDA and one or two other state agencies. I don't see why this information cannot be released with discretion in Britain or Europe.

Our interpretation is that the PCB's are exhibiting a greater degree of toxicity in this chronic study than we had anticipated. Secondly, although there are variations depending on species of animals, the PCB's are about the same as DDT in mammals.

We have additional interim data which will perhaps be more discouraging. We are repeating some of the experiments to confirm or deny the earlier findings and are not distributing the early results at this time.

Elmer P. Wheeler

EPW:ju

Enclosure

Transwestern
EXHIBIT NO. 236
5/13/92 [illegible]

S CC663
PLAINTIFF'S EXHIBIT
58

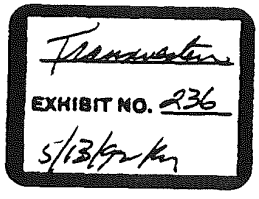

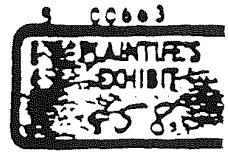

WATER_PCB-SD00000777772

January 15, 1970

SUMMARY

STATUS OF AROCLOR STUDIES

AT INDUSTRIAL BIO-TEST

Aroclor 1242

2 year rat at 1, 10 and 100 ppm:

At 90 days--possible liver enlargement. Males at 100 ppm. Histology O.K. Others O.K. Blood, urine.

2 year dog at 1, 10 and 100 ppm:

At 6 months--O.K. body weight, food consumption, reactions, mortality, hematology, blood chemistry and urine.

3 generation rat reproduction at 1, 10 and 100 ppm:

100 ppm--effect on survival--difficult to obtain pups for maturing and mating, egg production.

Aroclor 1254

2 year rat at 1, 10 and 100 ppm:

At 90 days possible liver enlargement in males at 100 ppm. Histology O.K. Other levels O.K.

2 year dog at 1, 10 and 100 ppm:

At six months body weight effected at 100 ppm. Possibly less food consumption? Other levels O.K. Same parameters as 1242.

3 generation rat study at 1, 10 and 100 ppm:

100 ppm--effect on survival same as 1242.

Aroclor 1260

2 year rat at 1, 10 and 100 ppm:

At 90 days--possible liver enlargement in males and females at 100 ppm. Other levels O.K.

2 year dogs at 1, 10 and 100 ppm:

At six months, body weight effect at 100 ppm, possibly at 10 ppm. One male and one female died--refused to eat. No other obvious reason for fatalities by gross examination.

3 generation rat study at 1, 10 and 100 ppm:

No adverse effects.

WATER_PCB-SD0000077773

	1242	1254	1260
2-year rat chronic			
At 1, 10, 100 ppm Status 90 days	100 ppm Liver enl. Males 10 ppm O.K.	100 ppm Liver enl. Males 10 ppm O.K.	100 ppm Liver enl. M & F 10 ppm O.K.
2-year dog chronic			
Status--6 months	100 ppm O.K.	100 ppm Body wt. dec. 10 ppm O.K.	100 ppm 1M-1F died refused food-- no other gross abn. 10 ppm possible body wt. effect
3 generation rat reproduction	100 ppm effects survival 10 ppm O.K.	100 ppm effects survival 10 ppm O.K.	100 ppm O.K.

5 00000

Monsanto

Monsanto Company
800 N Lindbergh Boulevard
St. Louis, Missouri 63166
Phone: (314) 694-1000

August 27, 1970

Dear Sir:

In February we advised you of the newspaper and magazine articles indicating that polychlorinated biphenyls (PCBs) have been discovered at some points in some marine, aquatic and wildlife environments. It was claimed that the PCBs found strongly resembled chlorinated biphenyls containing 54% and 60% chlorine by weight. The quantities detected are said to be in the parts per million and parts per billion categories.

Pydraul F-9 has been formulated with polychlorinated biphenyls. A new formulation has been developed and tested to provide equal or better performance. The new formulation will be designated Pydraul F-9-A. This formulation is completely compatible with the old formulation and does not contain polychlorinated biphenyls.

During the next 90 days, as inventory is depleted in warehouses around the country the new formulations will be shipped to fill your orders.

If we can be of further assistance or answer any questions you might have please contact our local representative or me in St. Louis.

Very truly yours,

Norman T. Johnson
Marketing Manager
Industrial Fluids

lb

TRAN 062404

EXHIBIT NO. 237
5/12/92 kr

WATER_PCB-SD0000077775

C. L. Bradford - C. O.

February 4, 1972

PRICING - MCS 1223

R. E. Hatton
J. M. Davidson
T. L. Gossage
H. S. Bergen
H. R. Ford - 1070
J. O. Frederiksen - 1460
D. W. Stegen - 1460

D. F. Smith
B2NO

Dale, MCS 1223 is our suggested replacement product for Turbinol 153.. Pricing will be the same as for Turbinol 153, and we will also sell this product FOB St. Louis.

For the record:

Packaging	Price - $/Gal.
TC/TT	$3.55
TL	3.75
LTL	3.85
5 gal. can	4.20

Shipping point: FOB St. Louis

Terms: Net 30 days

C. L. Bradford

/pep

BPS to carboneea:

Costs quoted by Jim Savage on February 2, 1972 show MCS 1223 to be $2.66 per gallon in drums and $2.46 per gallon bulk. Gross profit at those costs and at the prices noted above should be 31% in either drums or bulk. This confirms discussion with and approval of H. S. Bergen on February 3, 1972.

C. L. B.

PLAINTIFF'S EXHIBIT 35
1-19-92

TRAN 003202

Transwestern
EXHIBIT NO. 238
5/13/92

WATER_PCB-SD0000077776

File
Destroy
JTG
WHH
MNJ
REK
RAM
EPW

St. Louis - General Offices

March 17, 1964

Pydraul A-200
Toxicity Statement for Shell

Dale Smith
DSMIT

Based on the model which you forwarded to me and which I am returning herewith, I believe the following statements would be appropriate for Shell to incorporate in their technical bulletin describing Pydraul A-200:

Physiological Properties
As stated previously Shell SFR Fluid 29 is a chlorinated hydrocarbon base fluid. There have been no reported cases of toxic effects from the use of this compound in industry. However, the following statements cover the three most probable means of exposure:

1. Orally - Accidental swallowing is the chief potential source of entry into the body. No eating should be permitted in working areas and personal cleanliness must be insisted upon. Since there is no specific antidote, vomiting should be induced and supportive treatment given.

2. By skin absorption - Repeated and prolonged contact with the skin (either as undiluted fluid or from wetted clothing) presents some degree of hazard. The practice of a reasonable degree of personal hygiene will prevent any possible ill health effects. The fluid should be washed from the skin with soap and water. Wet or impregnated clothing should be removed and laundered before re-use.

3. By breathing vapor - Under usual operating conditions or at ambient temperature, inhalation of vapor is almost impossible due to the extremely low volatility of the fluid. When the fluid is used at elevated temperatures, care should be taken to avoid spillage and leaks in order to prevent escape of vapors to the workroom atmosphere. A suggested threshold limit value is 1 mg per cubic meter of air."

TRAN 056870

COMPANY CONFIDENTIAL

EPW:mjb

Elmer P. Wheeler

Nauswestern
EXHIBIT NO. 239
5/13/92 Rm

[illegible]/590/JN23/0810/[illegible]

[illegible] STLOUIS JUNE 23/87

[illegible] DAVIS STLOUIS

A FRENCH STEEL MILL HAVING RECENTLY CONVERTED TO [illegible] 150 A [illegible] OPERATED WATER COOLED HOOD MECHANISM TO RECOVER [illegible] PROCESS HAS EXPERIENCED [illegible].

[illegible] DEVELOPED SEVERE VAPORS AND [illegible] HAVE BEEN INCONVENIENCED TO SAY THE LEAST.

THIS IS AN ACCIDENT NOT LIKELY TO OCCUR VERY FREQUENTLY.

HOWEVER PRESSURE HAS BEEN BROUGHT ON MANAGEMENT BY THE WORKERS COMMITTEE AND VARIOUS UNIONS TO PROVIDE PROOF THAT VAPOURS OF OVER-HEATED PYDRAUL 150 WOULD NOT HAVE DANGEROUS EFFEICTS ON THE WORKERS- HEALTH.

CAN YOU HELP US BY WRITTEN STATEMENTS - TOXICITY REPORTS OR WHATEVER YOU THINK IS APPROPRIATE.

THIS MATTER IS URGENT IF WE DO NOT WISH TO GET THROWN OUT AND POLITICALLY IN TROUBLE WITH STEEL MILL MANAGEMENT.

V J HEROUFOSSE BRUSSELS

4-2196

Transwestern
EXHIBIT NO. 240
5/13/92 [illegible]

COMPANY CONFIDENTIAL

TRAN 056785

D4590/JN23/0810

MONSANTO TC MONSANTO TC MONSANTO TC MONSANTO TC

CALL REPORT – ORGANIC DIVISION MARKETING DEPARTMENT

DICTATE:
1. HEADING INFORMATION
2. NAMES OF ADDRESSEES AND CARBONEES

REPORT:
1. IMMEDIATE ACTION REQUIRED
2. PERSONS CONTACTED
3. OBJECTIVE
4. RESULTS
5. FURTHER ACTION REQUIRED

CO. NAME	Chrysler Corporation
CITY AND STATE	~~12800 Oakland Avenue~~ Detroit, MI (Highland Park)
DATE OF CALL	3/21/68
CHARGE REQUIRED CALL NO.	

CONTACT DATA AND MAILING LIST CHANGES - DISTRICT OFFICE USE ONLY

NAME AND TITLE	NOT ON	TAKE OFF	MP	MAG	CATEGORY CODES

TO: N. T. JOHNSON
T. LOUIS

CC R. C. MEYER - CINCINNATI
D. F. SMITH - ST.L

PERSONNEL CONTACTED:

Louis Redmond - Industrial Hygiene Services

OBJECTIVE:

Determine reasons for Redmond's recommendation that Hydraul 312 not be used in Chrysler plants.

RESULTS:

Redmond had two main objections to the use of Hydraul 312 in Chrysler plants:

1. Hydraul 312 is a skin irritant.
2. Because of the chlorinated compounds, Hydraul 312 gives off dangerous vapors under decomposition temperatures.

Concerning the decomposition vapors of Hydraul 312, I discovered in questioning Redmond that he was worried about the possible ~~smoke~~ emission of Phosgene. I assured him that HCl gas was the only chlorinated component of the decomposition vapors. This seemed to ease his mind somewhat. However, he is still worried about the skin irritation connected with Hydraul fluids. He admitted that he had only given a scant investigation of Hydraul 312 before vetoing its acceptance. He stated that in the Kokomo plant, there are many materials there already which are potentially dangerous material from a toxicological standpoint. He didn't particularly want to introduce another one. I informed him of the performance advantages of Hydraul 312, and Redmond admitted there must be a significant advantage to using this product.

Redmond whimsically stated that all you have to do is turn thumbs down on a product, and you shake another salesman out of the woodwork. He was glad that I came and talked to him, and assured me that he has an open mind on such matters. He said that he would definitely give reconsideration to Hydraul 312, and asked that I request~~ing~~ additional skin irritation ~~and~~ toxicological data on Hydraul 312. I told him that I would have Elmer Wheeler write him directly. When I mentioned Wheeler's name, Redmond was quite impressed and remembered Wheeler as President of the AIHA.

Finally, Redmond mentioned that the product had been turned down at the plant site due to decreased fire resistance. I told him that I didn't think Ed Davis had run actual tests, and may have been influenced by our competition. Nevertheless, I stated that we would have to overcome that hurdle after we got

Continued. . . .

DISTRICT OFFICE	SALESMAN	DATE REC'D	DATE TYPED
Detroit	G. F. Fague/hs	3/22/68	3/22/68

5-431A REV. 2/66

EXTRA COPY

TRAN 058086

COMPANY CONFIDENTIAL

Transwestern
EXHIBIT NO. 241
5/13/92 kn

WATER_PCB-SD0000077779

CALL REPORT – ORGANIC DIVISION MARKETING DEPARTMENT

DICTATE:
1. HEADING INFORMATION
2. NAMES OF ADDRESSEES AND CARBONEES

REPORT:
1. IMMEDIATE ACTION REQUIRED
2. PERSONS CONTACTED
3. OBJECTIVE
4. RESULTS
5. FURTHER ACTION REQUIRED

CUSTOMER NAME	DATE OF CALL
Chrysler Corporation	3/21/68
CITY AND STATE	CHANGE REQUIRED CALL UNITS

CONTACT DATA AND MAILING LIST CHANGES - DISTRICT OFFICE USE ONLY

NAME AND TITLE	PUT ON	TAKE OFF	MP	MAG	CATEGORY CODES

TO Continued..... CC

approval from Industrial Hygiene

ATT DICK MEYER:

Looks like we're making headway at this end. Suggest you contact Ed Davis and tell him that Redmond is reconsidering his decision.

ATT DALE SMITH:

Would you please contact Elmer Wheeler and request that he send skin irritation toxicological data to:

Mr. Louis Redmond
Chrysler Corporation
Industrial Hygiene Services
P.O. Box 1919
Detroit, Michigan 48231

In fact, Dale, a personal phone call from Wheeler may impress Redmond.

Dr. Kelly and I talked with Redmond by phone. Redmond is completely bagged with "flame resistant" ethylene glycol-water fluids and sees no reason to invite trouble by changing to Pydrauls which are "irritants". We could not persuade him that this classification is not appropriate.
EAW
5/11/68

DISTRICT OFFICE	SALESMAN	DATE REC'D	DATE TYPED
Detroit	G.F. Fague/hs	3/22/68	3/22/68

5-331A (REV. 2/66)

EXTRA COPY COMPANY CONFIDENTIAL TRAN 058087

S. F. Smith
J. C. Lewis

TRAN 058088

COMPANY
CONFIDENTIAL

WATER_PCB-SD0000077781

CALL REPORT – ORGANIC DIVISION MARKETING DEPARTMENT

DICTATE:
1. HEADING INFORMATION
2. NAMES OF ADDRESSEES AND CARBONEES

REPORT:
1. IMMEDIATE ACTION REQUIRED
2. PERSONS CONTACTED
3. OBJECTIVE
4. RESULTS
5. FURTHER ACTION REQUIRED

CUSTOMER NAME					DATE OF CALL
FORD MOTOR COMPANY					4-25-68
CITY AND STATE					CHARGE REQUIRED CALL UNITS
DEARBORN, MICHIGAN					
CONTACT DATA AND MAILING LIST CHANGES - DISTRICT OFFICE USE ONLY					
NAME AND TITLE	PUT ON	TAKE OFF	MP	MAG	CATEGORY CODES

TO N.T. JOHNSON
ST. LOUIS

Dale Smith - St. Louis
CC L.R. STARK - ST. LOUIS
E.P. WHEELER, M.D. - ST. LOUIS

PERSONNEL CONTACTED: Stu Falls - Quality Control
(Joint call made with Howard Bergen)

OBJECTIVE: DISCUSS PLANS FOR FIRE-RESISTANCE SEMINAR AND FORTHCOMING PRESENTATION TO ROUGE IRON FOUNDRY PERSONNEL.

RESULTS:

Falls mentioned that he had received a letter from our Emmet Kelly concerning Pydraul toxicity, but felt that the information in kthis letter was insufficient. He again emphasized the fact that we are dealing with people in the Rouge Iron Foundry who have used Houghto-Safe 1120 for many years. The information necessary to make them change must be precise, accurate and concrete. He made certain suggestions on what should be contained in such a letter on the toxicity of Pydraul.

We discussed the ensuing safety symposium to be held on May 1 and Falls mentioned that Gunnar Bergelund, Ford's Corporate Director of Plant Safety, would be present at this meeting. All other arrangements have been completed and Falls estimated that there would be 15 to 20 Ford people there.

ATTN: ELMER WHEELER

Dr. Wheeler, Dr. Kelly recently wrote a very nice comprehensive letter to Stu Falls at Ford concerning the toxicity of Pydraul 312. However, Falls asked for the following improvements:

1 - The toxicity and safe handling bulletin mentioned that tests were run at Kettering Lab on a Pydraul fluid. Falls would like it explained that this Pydraul fluid would contain the same components as Pydraul 312, except of course, for the petroleum fraction.

2 - What are the actual chemical constituents of the decomposition vapors of Pydraul 312?

3 - Why is it impossible for Phosgene to be emitted as a decomposition gas?

Would it be possible for you to compose a letter like Dr. Kelly's first one but including the above information. Rather than a letter actually,

DISTRICT OFFICE	SALESMAN	CONFIRMED	DATE TYPED
	C.F. Fague		

5-331A (REV. 2/66)

EXTRA COPY

COMPANY CONFIDENTIAL

TRAN 058096

Transwestern
EXHIBIT NO. 242
5/13/96 kg

WATER_PCB-SD0000077782

CALL REPORT – ORGANIC DIVISION MARKETING DEPARTMENT

DICTATE:
1. HEADING INFORMATION
2. ADDRESSEES
3. CARBONEES

REPORT:
1. IMMEDIATE ACTION REQUIRED
2. PERSONS CONTACTED
3. OBJECTIVE
4. [illegible]
5. FURTHER ACTION REQUIRED

CUSTOMER NAME					DATE OF CALL
FORD MOTOR COMPANY					4-25-68
CITY AND STATE					CHANGE REQUIRED CALL UNITS
DEARBORN, MICHIGAN					
CONTACT DATA AND MAILING LIST CHANGES - DISTRICT OFFICE USE ONLY					
NAME AND TITLE	HOT ON	TAKE OFF	MP	MAG	CATEGORY CODES

TO CONTINUED.... CC

it might be better to put it in the form of a bulletin much like the toxicity and safe handling bulletin on Pydraul 312. You could than send it to me, and I could include it in my formal proposal to the Rouge Iron Foundry. I know you have had much contact with the automotive industry, and you name has been mentioned and recognized amoung my contacts at Ford.

ATTN: LOUIS STARK

Lou, would you please send the information we talked about while you were in Detroit concerning the decompostion of Pydraul 312 and the infesibility of Phosgene formation.

ATTN: DALE SMITH

Dale, Howard Bergen mentioned some tests that were recently completed at General Electric concerning the toxicity of our electrical Aroclors. Could you send a copy of the results of these tests so that I may use them as a reference?

DISTRICT OFFICE	SALESMAN	DATE REC'D	DATE TYPED
DETROIT	C.E. PAGUE/sb	5-3-68	5-6-68

5-331A REV. 2/66

EXTRA COPY

COMPANY CONFIDENTIAL

TRAN 058097

WATER_PCB-SD0000077783

Detroit, Michigan

October 14, 1969

Water Pollution

R. A. Garcia - Akron
D. A. Hall - St. Louis
D. F. Smith - St. Louis
Elmer Wheeler - St. Louis
J. W. Newcombe - Detroit

N. T. Johnson
St. Louis

Norm, confirming our recent conversation, there have been some serious rumblings in Detroit lately on water pollution.

A Mr. F. E. Frost, Chief Engineer of the Water Resources Commission, Michigan Department of Natural Resources, sent a letter to the environmental control departments of Ford and Chrysler and I assume General Motors. The letter states that the commission has been in contact with a "large chemical manufacturing firm" regarding the high toxicity to aquatic life of chlorinated biphenyls "which they manufacture".

The letter goes on to say that Monsanto manufactures a hydraulic fluid brand named "Aroclor" which the commission is now studying with regard to water pollution hazards. Frost requests that the companies report back on how much of this product they are presently using.

Bill Hunt of Ford called and asked that I give him a ball park percentage of PCB in Pydraul 312 and Therminol FR-2 which they use. He said the letter is causing no problems at Ford since they realize many products they use are under study by water pollution authorities

Nick Graham at Chrysler, however, called and reported that he has been forced to deny all shop trials of any Pydraul fluids until they are reformulated to contain no PCB's. This order was handed down from Al Baulden, Chrysler Department of Environmental Control.

Thus, at this moment, we are completely out at Chrysler, affecting Kokomo, Huber Avenue Foundry and Indianapolis. With time, things could get worse at Ford, too. My recommendation is that we visit the Michigan Natural Resources Department immediately to inform them of the impact their letter made on Chrysler and to make them aware of some of our toxicological studies in this area. A visit to Chrysler's Mr. Baulden should follow. In fact, a meeting with Baulden, Elmer Wheeler and Don Eschelbach of Chrysler's Industrial Hygiene Department should be arranged.

continued.....

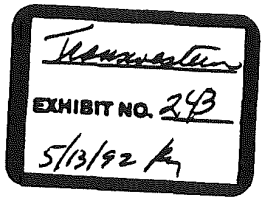

WATER_PCB-SD0000077784

Norm, the Huber Avenue shop trial request will reach Nick Graham's desk shortly. I'd hate to see it turned down when they've gone through all the pains to change pump seals and specs to accomodate Hydraul 312.

Please get in touch with me ASAP to let me know what we are going to do about this situation.

Regards

G. P. Payne

GPP:ej

TRAN 059486

WATER_PCB-SD0000077785

WATER_PCB-SD000007786

4-15-65

Elmer –

Would you please write a letter to the man below about the safe handling and toxicity of Pydraul 312?

Ford Tractor keeps bigger and bigger on a Pydraul potential. Our competition is getting real tough and they are Ford thinking seriously about 312.

We have a presentation scheduled for May 1 in Detroit concerned mainly about fire resistance. So a letter from you should settle the Toxicity Question.

Thanks always.

Dick Smith

MR. I. S. FALLS
FORD MOTOR COMPANY
ROUGE OFFICE BLDG.
3001 MILLER ROAD
DEARBORN, MICHIGAN 48121

TRAN 058091

COMPANY CONFIDENTIAL

Transwestern
EXHIBIT NO. 344
5/13/92 kw