05101036I

STOP BRAKE TROUBLES

WITH

Velvetouch® Metalik

the new powdered metal brake lining

Brakes Better **Stops Quicker** **Lasts Longer**

Needs Fewer Adjustments

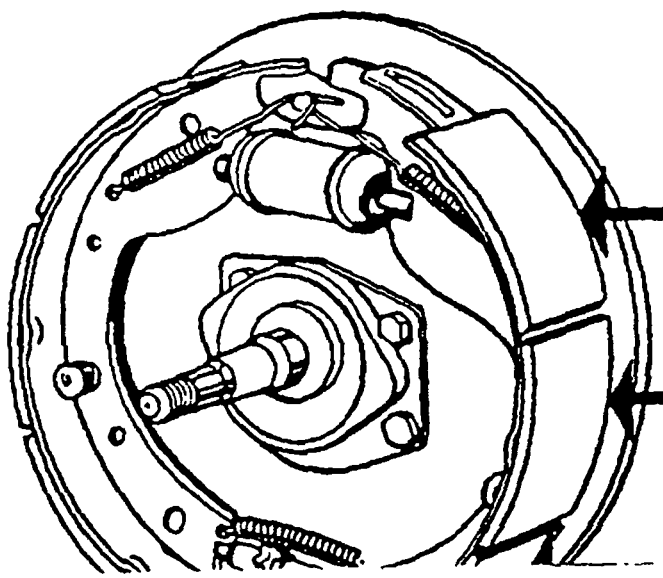

POWDERED METAL SEGMENTS

Velvetouch Metalik lining is composed entirely of powdered metal segments—NOT ASBESTOS. It runs cooler ...holds faster and surer, re-