PLAINTIFF'S EXHIBIT

ASI-1145

A.I.A. File No. 30-C-1
(August, 1956)

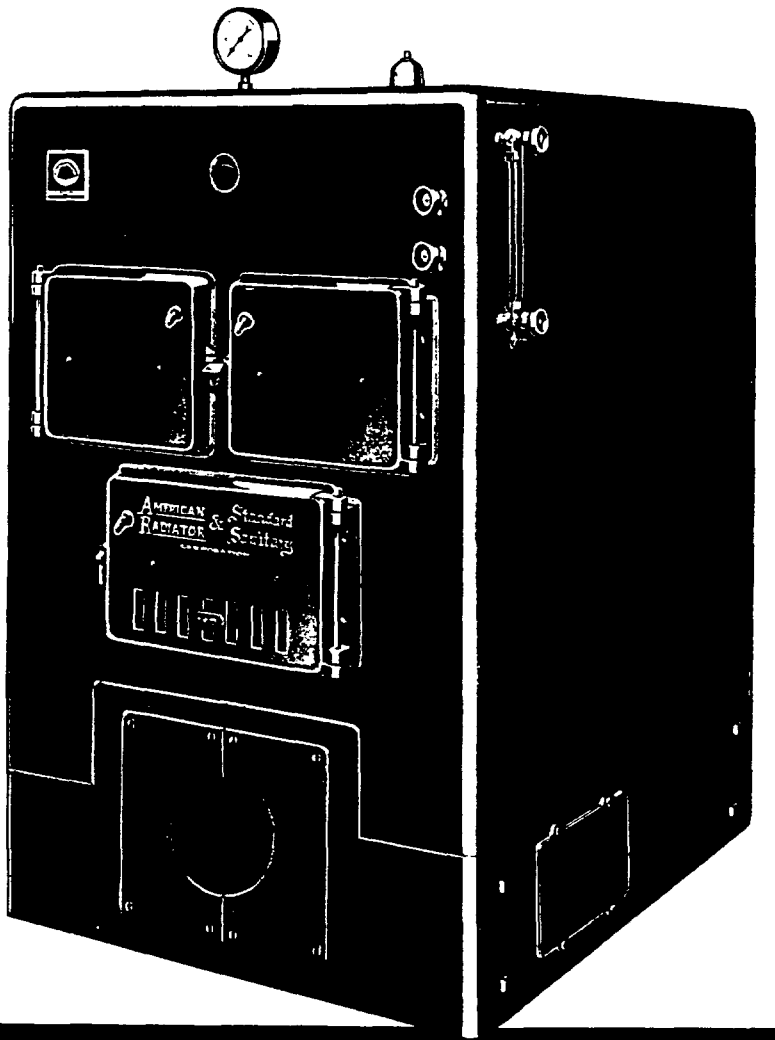

Redflash boiler

oil, gas or coal-fired

AMERICAN-Standard

hot water or steam heat

12398

A.I.A. File No. 30-C-1
(August, 1956)

indirect type ("IS")

G-2, G-4 and G-6 steam boilers for hot water supply

typical "IS" installation

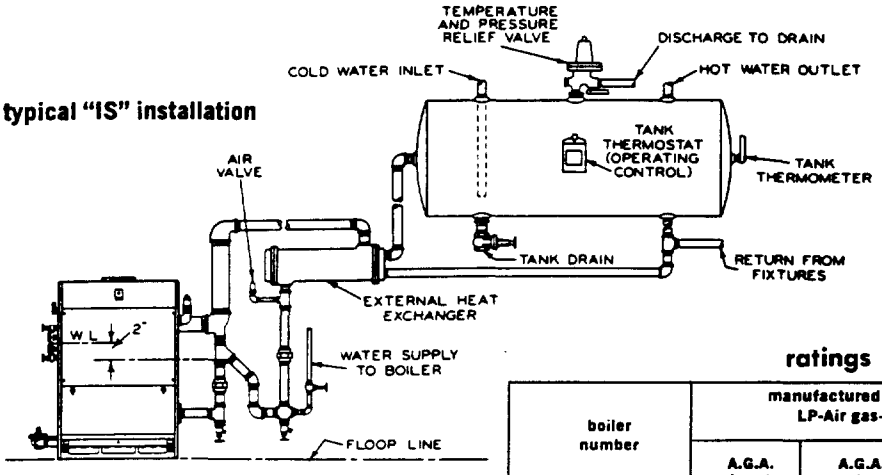

■ standard "IS" equipment —

G-2 all-purpose (steam)

In addition to regular equipment furnished for G-2 all-purpose steam boilers, "IS" boiler equipment includes American-Standard CA-666 immersion operating control for use in storage tank.

G-4 (steam) and G-6 (steam)

American-Standard CA-666 immersion operating control for use in storage tank.

American-Standard diaphragm gas valve; Baso automatic pilot switch for non-100% shut-off (100% shut-off controls for LP-air and LP gases consist of Baso combination pilot switch and valve with auxiliary Baso pilot valves. Optional other gases); American-Standard 450-BA-1 boiler pressure limit control; resetting low water cut-off; manual shut-off valve; gas pressure regulator (except for LP-gas); steam gauge; safety valve; boiler drains and pilot cocks; insulated jacket; draft hood.

■ optional equipment

G-2 all-purpose (steam)

Runner type pilot ignition for use with listed gases (except for G-23-F) if specified on order furnished to meet local Utility codes.

Push button electric ignition for use with listed gases.

Floor shield for combustible flooring. Add suffix letter "C" to boiler number.

G-4 (steam)

Runner type pilot for mfd., nat. and mixed gas non-100% shut-off furnished if specified on order to meet local Utility codes.

G-4 (steam) and G-6 (steam)

Push button electric ignition for use with mfd., nat. and mixed gas non-100% shut-off furnished if specified on order.

ratings

boiler number	manufactured, Natural and Mixed gas; LP-Air gas—525-1400 Btu; LP gas				
	A.G.A. input Btu/hr	A.G.A. output Btu/hr	rating—gallons water per hour ■		
			60° rise	80° rise	100° rise
G-23 -FG steam	60,000	48,000	96	71	58
G-24 -•G steam	90,000	72,000	144	107	86
G-25 -•G steam	120,000	96,000	192	143	115
G-26 -•G steam	150,000	120,000	240	179	144
G-27 -•G steam	180,000	144,000	288	215	173
G-28 -•G steam	210,000	168,000	336	251	201
G-29 -•G steam	240,000	192,000	384	287	230
G-210-•G steam	270,000	216,000	432	323	259
G-211-•G steam	300,000	240,000	480	359	288
• Substitute letter "F" for flush or "D" for deluxe jacket.					
G-44 steam	180,000	144,000	290	215	175
G-45 steam	240,000	192,000	385	290	230
G-46 steam	300,000	240,000	480	360	290
G-47 steam	360,000	288,000	575	430	345
G-48 steam	420,000	336,000	670	505	405
G-49 steam	480,000	384,000	770	575	460
G-410 steam	540,000	432,000	865	650	520
G-411 steam	600,000	480,000	960	710	575
G-66 steam	650,000	520,000	1040	780	624
G-67 steam	780,000	624,000	1250	935	748
G-68 steam	910,000	728,000	1460	1090	874
G-69 steam	1,040,000	832,000	1660	1250	1000
G-610 steam	1,170,000	936,000	1870	1410	1120
G-611 steam	1,300,000	1,040,000	2080	1560	1250
G-613 steam	1,560,000	1,248,000	2500	1870	1490
G-615 steam	1,820,000	1,456,000	2910	2190	1750
G-617 steam	2,080,000	1,664,000	3330	2500	1990
G-619 steam	2,340,000	1,872,000	3750	2810	2250
G-621 steam	2,600,000	2,080,000	4170	3120	2500
G-622 steam	2,730,000	2,184,000	4370	3280	2620
G-625 steam	3,120,000	2,496,000	4980	3740	2900
G-628 steam	3,510,000	2,808,000	5600	4210	3360
G-631 steam	3,900,000	3,120,000	6250	4680	3740
G-633 steam	4,160,000	3,328,000	6660	4990	4000
G-637 steam	4,680,000	3,744,000	7480	5610	4490
G-641 steam	5,200,000	4,160,000	8330	6250	5000

■ For altitudes above 2000 ft., ratings should be reduced at the rate of 4% for each 1000 ft. above sea level.

AMERICAN-Standard
PLUMBING AND HEATING DIVISION

model IN Inshot gas conversion burner

factory assembled • (controls regularly furnished are for 115 volt, 60 cycle current)

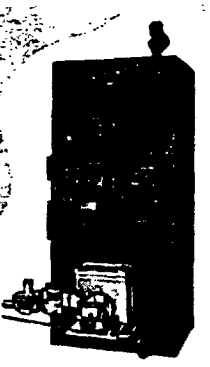

Arcoleader packaged oil-fired boiler is easily converted to gas-fired heating with the compact Inshot burner.

ratings

model	A.G.A. ratings—Btu input per hour			
	Nat and Mxd gas		Mfg gas	
	min	max	min	max
IN-150	80,000	150,000	80,000	150,000
IN-245	95,000	245,000	not available	not available
IN-275	95,000	275,000	not available	not available

Gas valve sizes: ½ inch for IN-150 nat and mxd gases; ¾ inch for all other models.

draft hood, flue pipe dimensions

input range Btu per hour	draft hood and flue pipe sizes ■ inches
minimum to 120,000	5
120,000—180,000	6
180,000—250,000	7
250,000—320,000	8
325,000 maximum	9

■ If flue pipe exceeds 10 ft in length, or contains more than 2 elbows, use next size larger draft hood and flue pipe.

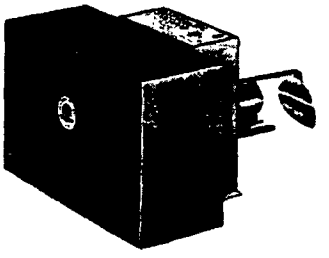

inputs for Arcoleader and Arcoliner boilers

boiler model	IN-150 ■	IN-245 ■	IN-275 ■	IN-275 ■
	nat mxd mfd •	nat mxd ONLY •	nat mxd ONLY •	nat mxd ONLY •
	maximum gas inputs			
	3 section	4 section	5 section	6 section
Arcoleader	115,000	160,000	210,000	260,000
Arcoliner	120,000	170,000	200,000	▲

■ burner size • type of gas ▲ not recommended for gas firing.
Lower inputs may be used to conform with the load installed on the boiler.
In these cases, a smaller size burner may be selected to meet this requirement.

dimensions (inches)

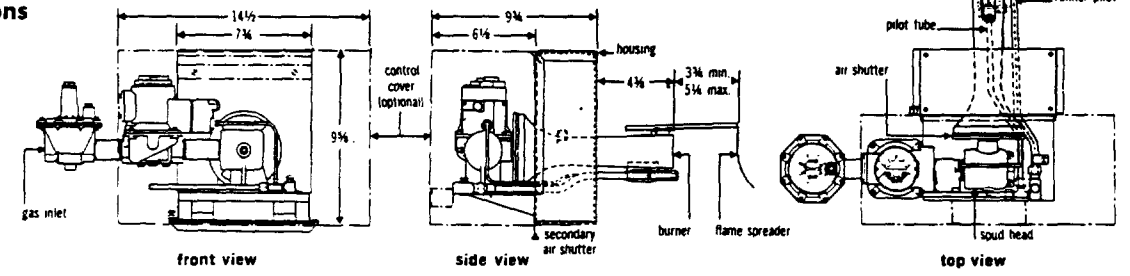

■ standard equipment

American-Standard CA-412 thermostat.
Runner pilot ignition.
Manual shut-off valve.
Control housing.
Stainless steel flame spreader.
Pilot throttling valve.
Pilot filter—with mfd gas burners only.
Two main burner orifices: one drilled for minimum input, factory installed; the second, also drilled for minimum input, can be drilled to other inputs as required.

models IN-150 and IN-245

American-Standard V-600 series combination gas valve, pressure regulator and safety pilot switch, transformer, manual opener.

model IN-275

General Controls KX3H quiet solenoid gas valve, plug-in safety pilot switch, transformer, manual opener. Gas pressure regulator.

■ optional equipment

Self-energizing controls: General Controls T80-A thermostat, B-60 gas valve and PG9 pilot generator — if desired, specify on order:

burner model	type of gas
IN-150	Nat. and Mxd.
IN-150	Mfd.
IN-245	Nat. and Mxd.
IN-275	Nat. and Mxd.

Select from list below special limit control which must be used with self-energizing controls.

100% safety shut-off, all models, specify on order.
Pilot filter—regularly furnished only for Mfd. gas. If desired for Nat. and Mxd. gas, specify on order.

instructions for ordering

Orders must specify:

1. Type of gas.
2. Btu (heat value of gas) and specific gravity.
3. Pressure available at outlet of gas meter.
4. Optional controls, if desired.

optional controls for self-energizing (millivolt) application:

number	description
L-52A10A1A	General Controls immersion limit control
700-D	General Controls pressure boiler limit control, scale 0-10 lbs.
S44A332	General Controls warm air limit control
S44A502A104	General Controls fan and limit control

Note. For orifice drill sizes — Inshot main burner spuds, see page 20

Arcoflame

arcoflame burner models used with American-Standard oil heating units

burner number	possible oil firing capacity ■ gallons per hour		air tube		mounting	used on American-Standard heating unit
	minimum	maximum ●	affective length	diameter		
PH2-5	0.65	3.00	5"	4"	hanger	Arcoleader boiler—all sizes A-504
PH2-6	0.65	3.00	6¾"	4"	hanger	Arcoliner boiler—all sizes Severn boiler—all sizes Oakmont boiler—all sizes
LF-A	3.00	7.00	6¾"	6"	flange	A-505—A509
LF-E	3.00	7.00	6¾"	6"	flange	Exbrook boiler—all sizes
ES-2-6	0.70	1.50	6¾"	4"	hanger	Arcoliner boiler—3 & 4 section Severn boiler—#17 Oakmont boiler—#84

● Up to 1,000 feet altitude. Reduce by 4% for each 1,000 feet altitude above sea level.
■ Possible maximum firing capacity not always used—see catalog or nameplate firing capacity for listed heating unit.

arcoflame burner models for boiler conversion

burner number	possible oil firing capacity gallons per hour		air tube		mounting	serves boilers with maximum installed radiation ● normal piping insulated		
						Btu/hr	square feet	
	minimum	maximum ●	effective ■ length inches	diameter inches		water or steam	water (150 Btu)	steam (240 Btu)
PH2- 8	0.65	3.00	7½	4	pedestal or flange	204,800	1365.3	853.0
PH2-15	0.65	3.00	14½	4	pedestal or flange	204,800	1365.3	853.0
PH2-23	0.65	3.00	22½	4	pedestal or flange	204,800	1365.3	853.0
L-1	3.00	7.00	11⅛	6	pedestal	477,850	3185.7	1991.0
L-3	3.00	7.00	21	6	pedestal	477,850	3185.7	1991.0
ES-2- 8	0.70	1.50	7½	4	pedestal or flange	102,400	682.7	426.5
ES-2-15	0.70	1.50	14½	4	pedestal or flange	102,400	682.7	426.5
ES-2-23	0.70	1.50	22½	4	pedestal or flange	102,400	682.7	426.5

● Up to 1,000 feet altitude. Reduce by 4% for each 1,000 feet altitude above sea level.
■ Measured from air tube mounting bolts to end of air tube.

■ general information

Model PH2-5 for Arcoleader and A-504, and Models PH2-6 and ES-2-6 for Arcoliner, Oakmont and Severn oil heating units are furnished with hanger mounting; mounting accessories packed separately and are different for each oil heating unit. Specify on order which is desired.

Models PH2 and ES-2 burners with 8", 15" and 23" air tube lengths are available with pedestal or flange mounting bracket, packed separately. Specify on order if pedestal or flange mounting bracket is desired.

Factory installed solenoid cut-off valve is available for model PH2 burners. If desired, specify with suffix "M", for example, PH2-6-M.

When ordering Arcoflame oil burners be sure to specify nozzle size desired. Nozzles and strainers are as follows:

For model PH2—Hollow cone, **60° or 70°**, 0.65, 0.75, 0.85, 0.90, 1.00, 1.10 and 1.25 gph.

Solid cone, **60° or 70°**, 1.35, 1.50, 1.65, 1.75, 2.00, 2.25, 2.50, 2.75 and 3.00 gph.

For model ES-2: Hollow cone, **80°**, 0.75, 0.85, 1.00, 1.10, 1.25, 1.35 and 1.50 gph.

For models L, LF Hollow cone, **80°**, 3.00, 3.50, 4.00 and 4.50 gph; **60°**, 5.00, 5.50, 6.00, 6.50 and 7.00 gph.

Two-stage fuel unit is available with models PH2 and ES-2 Arcoflame oil burners, and will be furnished when specified on order.

Two-stage fuel unit is regular equipment with model L Arcoflame oil burners.

Vapor installations: Substitute 450-BC-1 vapor limit control for 450-BA-1 pressure limit control with No. 11 or No. 12 control sets.

Electric clock thermostat: Substitute T 852 for CA-412 Thermostat; specify on order control set number with suffix "B".

Method of fuel atomization—Mechanical pressure—100 psi.

Air supply—Low pressure with squirrel cage fan.

Ignition—Intermittent spark, all models. Constant ignition can be used if desired.

Motor—PH2 and ES-2 Burners: ⅛ hp—1750 rpm.
L, LF-A and LF-E Burners: ¼ hp—1750 rpm.

Approval—All Arcoflame Oil Burners (60 cycle, 115V) are listed by The Underwriters Laboratories, Inc., for No. 1 and No. 2 commercial fuel oil, comply with Commercial Standard CS-75, and are approved by the New York City Board of Standards and Appeals, by the State Fire Marshal of the Commonwealth of Massachusetts and by the Department of State Police, State of Connecticut.

Arcoflame

Arcoflame Oil Burners are sold only in combination with American-Standard CA-701 Stack Control and with one of the standard Arcoflame Control sets listed below. The room thermostat and other controls are manufactured by and for American-Standard and enjoy a high reputation for skillful design and precision manufacture that assures accurate performance.

control sets

Arcoflame standard control set number		contents of Arcoflame standard control sets	
		stock number	instrument
No. 11 steam	For boiler **without** year-round domestic hot water.	CA-412 450-BA-1	thermostat pressure limit control
No. 12 steam	For boiler **with** year-round domestic hot water; built-in heater.	CA-412 450-BA-1 CA-666	thermostat pressure limit control immersion operating control
No. 13 water	For boiler **without** year-round domestic hot water; immersion control for new boiler.	CA-412 CA-655	thermostat immersion limit control
No. 23 water	For boiler **without** year-round domestic hot water; constant circulator operation.	CA-412 CA-655 CA-666-R	thermostat immersion limit control rev. acting low limit control
No. 14 water	For boiler **without** year-round domestic hot water; clamp-on control for existing boiler.	CA-412 251-MJ	thermostat clamp-on limit control
No. 15 water	For boiler **with** year-round domestic hot water; storage tank heater; using circulator.	CA-412 CA-655 CA-666 CA-295	thermostat immersion limit control immersion operating control relay transformer
No. 16 water	For boiler **with** year-round domestic hot water; built-in tankless heater; using circulator.	CA-412 CA-655 CA-666-DT CA-295	thermostat immersion limit control immersion control double throw switch relay transformer
No. 26 water	For boiler **with** year-round domestic hot water; built-in tankless heater; using circulator.	CA-412 CA-655 CA-666-AD CA-295	thermostat immersion limit control immersion control double throw switch with adjustable differential relay transformer
No. 16-Z water	2-Zone control, for boiler **with** year-round domestic hot water; built-in tankless heater; using circulators. NOTE: For each additional zone, add 1 No. CA-412 thermostat and 1 No. CA-295 relay transformer.	2 CA-412 CA-655 CA-666 CA-666-R 2 CA-295	thermostats immersion limit control immersion operating control rev. acting low limit control relay transformers
No. 19 warm air	For gravity furnace.	CA-412 CA-805	thermostat limit control
No. 20 warm air	For forced warm air unit.	CA-412 CA-815-S	thermostat fan and limit control

When ordering Nozzles be sure to specify solid or hollow cone nozzle and size desired. Nozzles are shown on pages 45 and 50.

■ selecting the proper size nozzle for the burner

Boiler efficiencies range from 50% to 80%. The latter is used with some boilers designed for oil burning.

CONVERSION BOILERS are coal burning boilers converted to oil.

For rapid circulation:

		OIL BURNING boilers	CONVERSION boilers
for steam (240 Btu)	nozzle size (g.p.h.) =	$\frac{\bullet \text{installed radiation}}{300}$	$\frac{\bullet \text{installed radiation}}{250}$
for water (150 Btu)	nozzle size (g.p.h.) =	$\frac{\bullet \text{installed radiation}}{500}$	$\frac{\bullet \text{installed radiation}}{400}$

• The Net installed radiation, square feet, plus the equivalent load of the domestic hot water or other appliances connected to the boiler, equals the INSTALLED RADIATION.

Arcoflame

dimensions and data—(inches)

model PH2

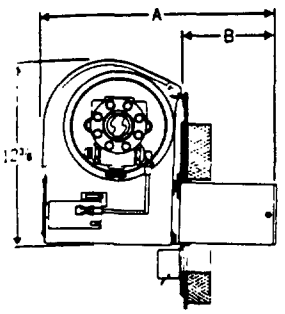

side view hanger mounted

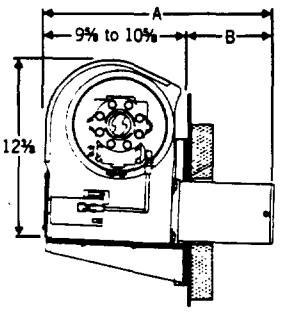

side view flange mounted

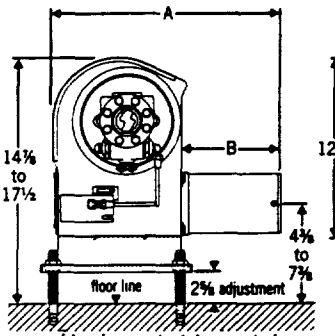

side view pedestal mounted

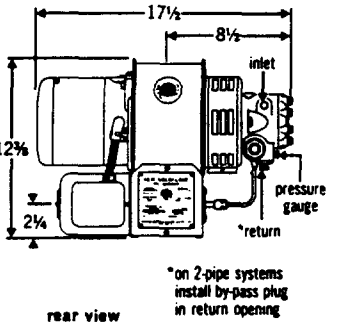

rear view

*on 2-pipe systems install by-pass plug in return opening

model	PH2-5	PH2-6	PH2-8	PH2-15	PH2-23
A	14¼	15½	16¾	23¾	31¾
B	5	6¾	8	15	23

diameter air tube—4"

model L (pedestal mounted)

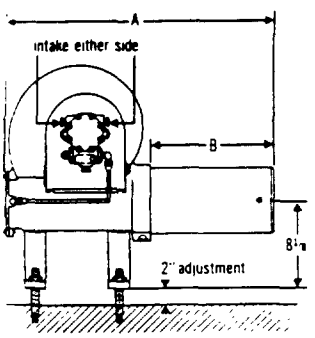

side view

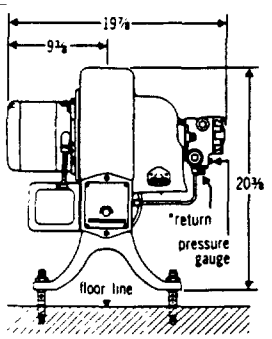

rear view

models LF-A, LF-E (flange mounted)

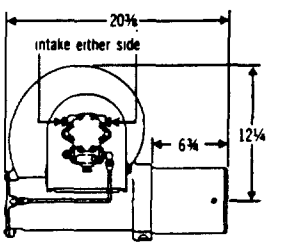

side view

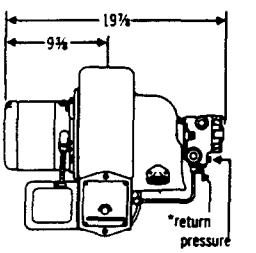

rear view

dimension	L-1	L-3	LF-A, LF-E
A	24¾	34⅝	20⅜
B	11⅛	21	6¾

diameter air tube—6"

*on 2-pipe systems install by-pass plug in return opening

model ES-2

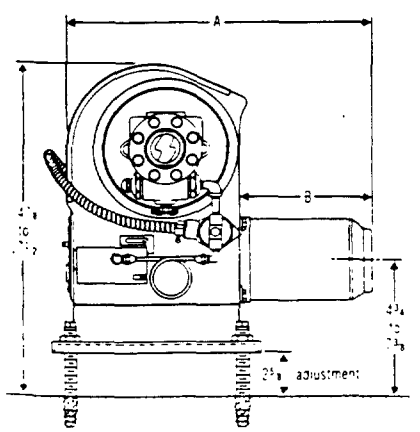

side view

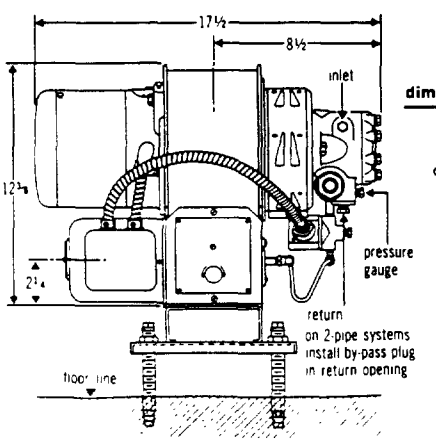

rear view

dimension	ES-2-6	ES-2-8	ES-2-15	ES-2-23
A	15½	16¾	23¾	31¾
B	6¾	8	15	23

diameter air tube—4"

AMERICAN-Standard
PLUMBING AND HEATING DIVISION

Arcoflame

model PH2

sectional view—
showing inner assembly

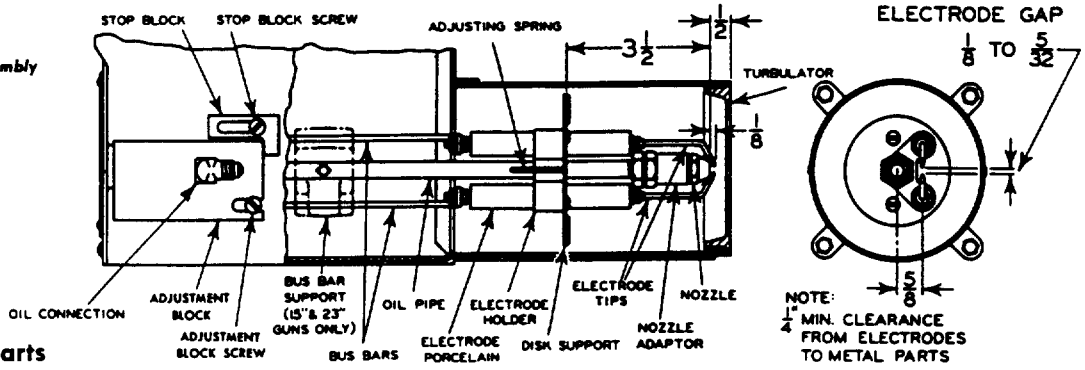

combustion parts

combination number	firing rate gph	static disc marking	turbulator marking	nozzle spray angle & type
1	.65 to 1.10	.65 to 1.10	.65 to 1.10	60°-70° Hollow
2	.90 to 1.25	.90 to 1.75	.90 to 1.75	60°-70° Hollow
	1.30 to 1.75	.90 to 1.75	.90 to 1.75	60°-70° Solid
3	1.80 to 2.30	1.80 to 3.00	1.80 to 2.30	60°-70° Solid
4	2.35 to 3.00	1.80 to 3.00	2.35 to 3.00	60°-70° Solid

TOP VIEW
ELECTRODE HOLDER

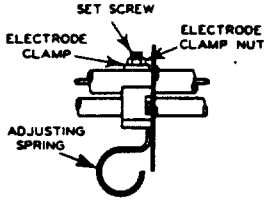

model L—air diverter and electrode setting

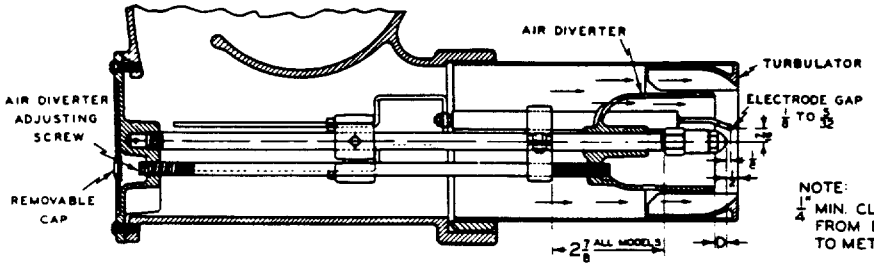

size of nozzle—hollow cone—gallons per hour	3.00	3.50	4.00	4.50	5.00	5.50	6.00	6.50	7.00
spray angle degrees	80°	80°	80°	80°	60°	60°	60°	60°	60°
dimension "D" inches	0	0	¼	¼	¼	¼	¼	½	½

"D" is distance from Diverter to Nozzle Tip

model ES-2

(use only with 80° hollow cone nozzle)

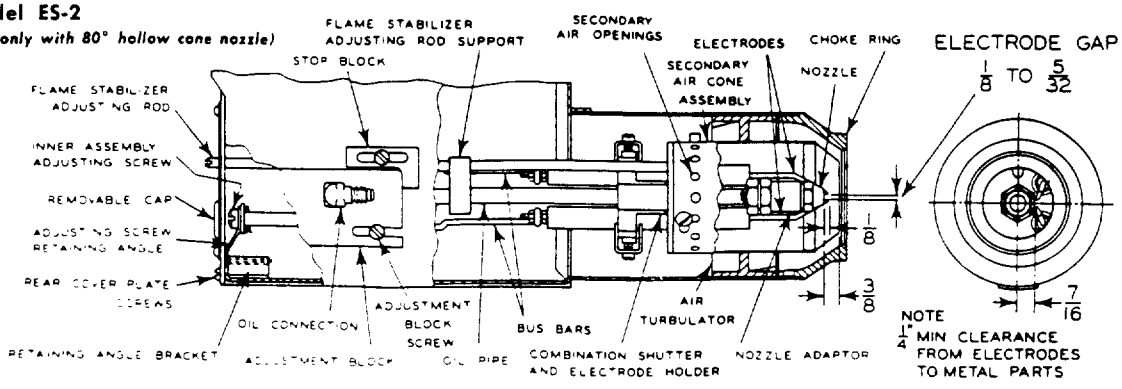

12404

heat Lib-O-Rator molded refractory combustion chambers

heat Lib-O-Rator

Heat Lib-O-Rator Molded Refractory Combustion Chambers are designed for and can be used with Models PH2, LF-A, LF-E, and ES-2 Oil Burners and fit the following Boiler-Burner Units:

boiler		heat Lib-O-Rator number	maximum firing rate gph
Arcoliner	153-T 154-T	4	1.35
	155-T	5	1.65
	156-T	6	2.00
Oakmont	84	00	1.50
	85	1	1.75
	86	2	2.25
	87 88 89	3	3.00
Severn	17 21	1	1.75
	25 29	2	2.25
	33 37	3	3.00
A-5	A-504	14-A	2.55
	A-505	15-A	3.30
	A-506 A-507 A-508	16-A	5.55
	A-509 A-510 A-511	17-A	7.65
Exbrook	207 208 209	7	4.50
	2010 2011 2012 2013	8	6.50

dimensions

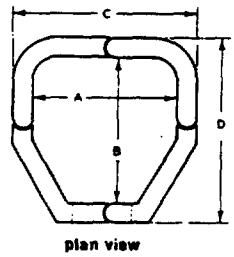

plan view

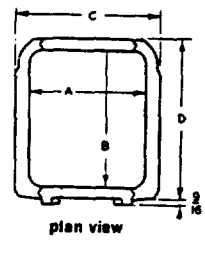

plan view

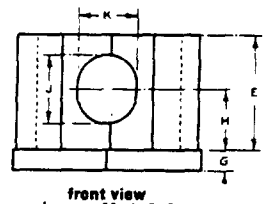

front view
size no: 00, 1, 2, 3, 1-S, 2-S, 3-S, 7 & 8

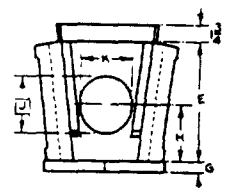

front view
size no: 4, 5 & 6

size no.	dimensions—inches								
	A	B	C	D	E	G	H	J	K
00	13	11½	17	15½	12¾	1¼	8¼	7⅛	6
1	14½	13	18½	17	12¾	1¼	7¹⁵⁄₁₆	7⅜	6
2	14½	15	18½	19	12¾	1¼	7¹⁵⁄₁₆	7⅜	6
3	14½	17	18½	21	12¾	1¼	7¹⁵⁄₁₆	7⅜	6
4	11⅞	9⅜	14⅞	11⅞	12¼	1¼	5¾	6	5½
5	11⅞	12	14⅞	14½	12¼	1¼	5¾	6	5½
6	11⅞	14	14⅞	16½	12¼	1¼	5¾	6	5½
7	18	16	22	20	17	2¼	8½	8	7
8	20	20	24	24	17	2¼	8½	8	7

A-5 boiler

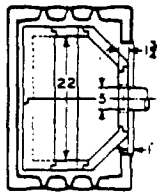

plan view

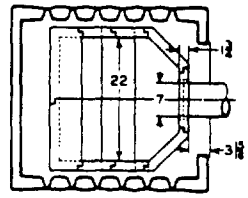

plan view

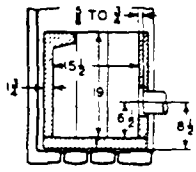

sectional view
4 section boiler

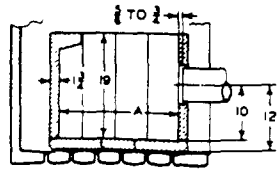

sectional view
5 thru 11 section boiler

chamber no.	no. of sections	A
14-A	4	15½
15-A	5	15½
16-A	6	21½
16-A	7	21½
16-A	8	21½
17-A	9	27½
17-A	10	27½
17-A	11	27½

12405

combustion chambers

Refractory combustion chambers made from fire brick

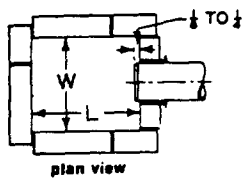

plan view

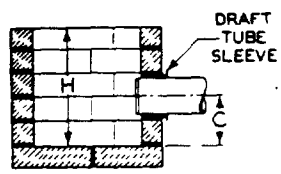

side view (cutaway) for nozzles below 1½ gallons

Fig. 1

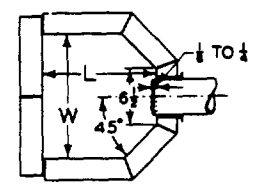

plan view

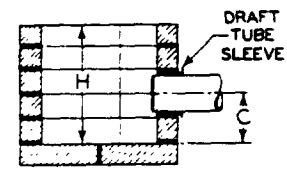

side view (cutaway) for nozzles of 1½ gallons and over

Fig. 2

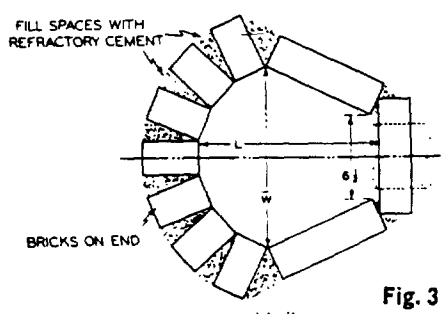

round boiler combustion chamber

Fig. 3

dimensions

burner model	nozzle size gph	spray angle and type cone (H=hollow; S=solid)	combustion chamber size—inches L	W	Hm	floor of C.C. to C.L. of nozzle "C"	min. wall thickness inches
PH2	0.65●	60°H or 70°H	7	7	14	4	2½
	0.75●	"	8	8	14	4½	2½
	1.00●	"	10	10	14	5	2½
	1.25●	"	11	11	14	5	2½
	1.35●	60°S or 70°S	12	11	14	5	2½
	1.50	"	13	11	14	5	2½
	1.65	"	14	12	14	5½	2½
	1.75	"	15	12	14	5½	2½
	2.00	"	15	12	14	5½	2½
	2.25	"	16	13	14	6	2½
	2.50	"	17	13	14	6	2½
	3.00	"	18	14	14	6-6½	2½
L, LF	3.00	80°H	16	18	18	8	4
	3.50	"	16	18	18	8	4
	4.00	"	18	18	18	8	4½
	4.50	"	20	20	19	9	4½
	5.00	60°H	20	22	20	10	4½
	5.50	"	22	22	20	10	4½
	6.00	"	22	22	20	10	4½
	6.50	"	24	22	20	11	4½
	7.00	"	24	24	22	11	4½
ES-2	0.75●	80°H	11	11	14	5½	2½
	1.00●	"	12	12	14	6	2½
	1.35●	"	13	13	14	6½	2½
	1.50	"	14	14	14	7	2½

■The height of combustion chamber "H" is a minimum. The firebrick should always be carried high enough to cover 2 inches of water backed surfaces.

●For nozzle sizes below 1.50 gallons per hour, build chamber rectangular; see Fig. 1.
For nozzle sizes of 1.50 gallons per hour or larger, build chamber as shown in Fig. 2.

NOTE:
Use Nozzles with Spray Angles specified in table above.
Do not attempt to burn more oil with these burners than specified on page 45.
If width of the larger sized chambers shown in the table cannot be obtained, increase length of chamber by amount of width reduced. Never reduce width by more than 3".

A-5 boiler

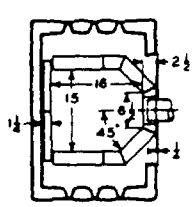

plan view

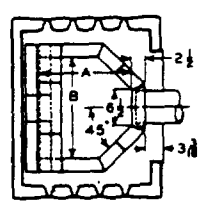

plan view

no. of sections	A	B
5	16	18
6	18	18
7	20	22
8	22	22
9	24	22
10	24	22½
11	26	22½

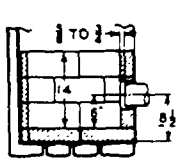

sectional view 4 section boiler

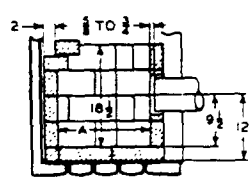

sectional view 5 thru 11 section boiler

A-7 boiler

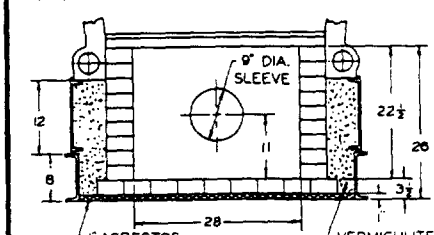

front view cutaway A-705-SO thru A-707-SO

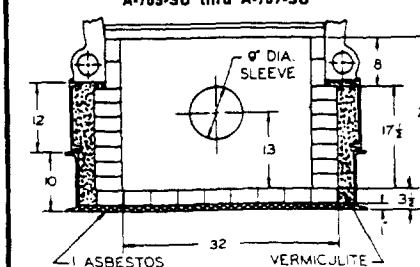

front view cutaway A-708-SO thru A-712-SO

boiler no.	chamber length (inside)
A-705	27½
A-706	32½
A-707	37½
A-708	38
A-709	41
A-710	44
A-711	47
A-712	50

