of switch. The variable thermostatic switch can be adjusted to a specific temperature with the temperature control knob; however, the preset switch cannot be adjusted. The temperature of the air at the duct is controlled by a blend door that combines warm and cool air to achieve the desired duct temperature.

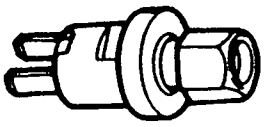

(Figure 67) The Pressure Cycling Switch

Pressure cycling switches sense the pressure in the low pressure side of the air conditioning system. They cycle the compressor on and off to control this pressure which, in turn, controls the temperature. Since these switches cannot be adjusted, duct air temperature is controlled by blend doors.

Pressure Control Valves

Pressure control valves control the temperature of the evaporator on non-cycling systems by controlling the pressure inside the evaporator. By controlling the pressure in the evaporator, these valves control the rate of evaporation, which controls the amount of heat removed (the temperature of the evaporator) to keep it from freezing up. Systems using these valves are sometimes referred to as six-part or non-cycling systems because compressor cycling is not necessary to control the evaporator temperature.

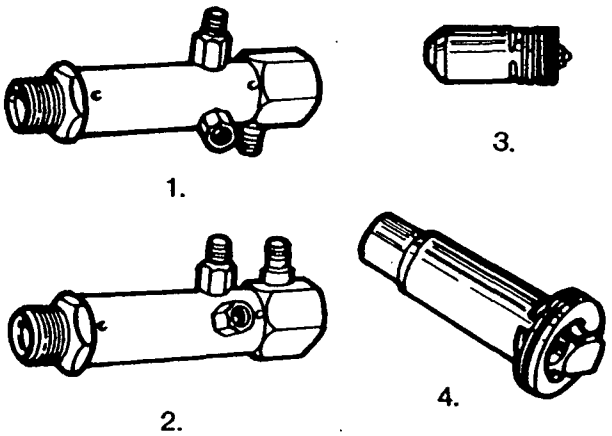

(Figure 68) 1) The STV Valve, 2) the POA Valve, 3) the Combo-STV, and the VIR POA Valve

The STV (Suction Throttling Valve) and the POA (Pilot Operated Absolute) valves are located in the suction line near the evaporator. The combo STV is mounted to the expansion valve in the combo (combination) assembly. The VIR POA is located in the VIR (Valves in Receiver) assembly. These valves are used by several different manufacturers on foreign as well as domestic vehicles.

The EPR valves, used by Chrysler, are located in the suction (low side) housing of the compressor. The valve is held in place with a retaining spring or clip. The three types of EPR valves that have been used are the flat, bullet, and spring type. The spring type may be used to replace either of the other two and is sold with a replacement retaining spring.

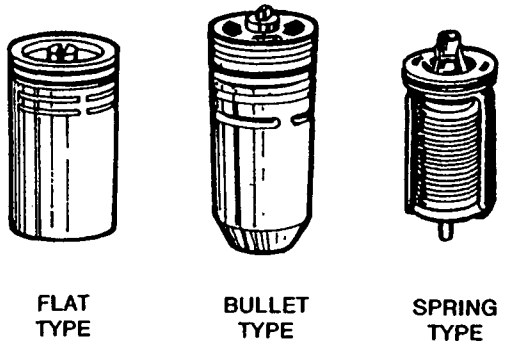

(Figure 69) The three types of EPR Valves.

Override Switches

Override switches are used to protect the compressor and eliminate the horsepower requirement of the compressor when necessary. In the beginning, override switches were installed to disengage and protect the compressor when a problem had occurred inside the system. On today's vehicles, with downsized engines, they are even more important. The following are just a few of the override switches found on today's air conditioned vehicles.

Low pressure switches may be located in the high or low pressure sides of the air conditioning system, and—whatever type they may be—they are designed to protect the compressor by turning it off when the refrigerant pressure is too low. Since the refrigerant is required to circulate oil back to the compressor, low refrigerant pressure could result in severe compressor damage.