technical catalog bulletin

A-5

oil-fired boilers

hot water or steam

AMERICAN-Standard

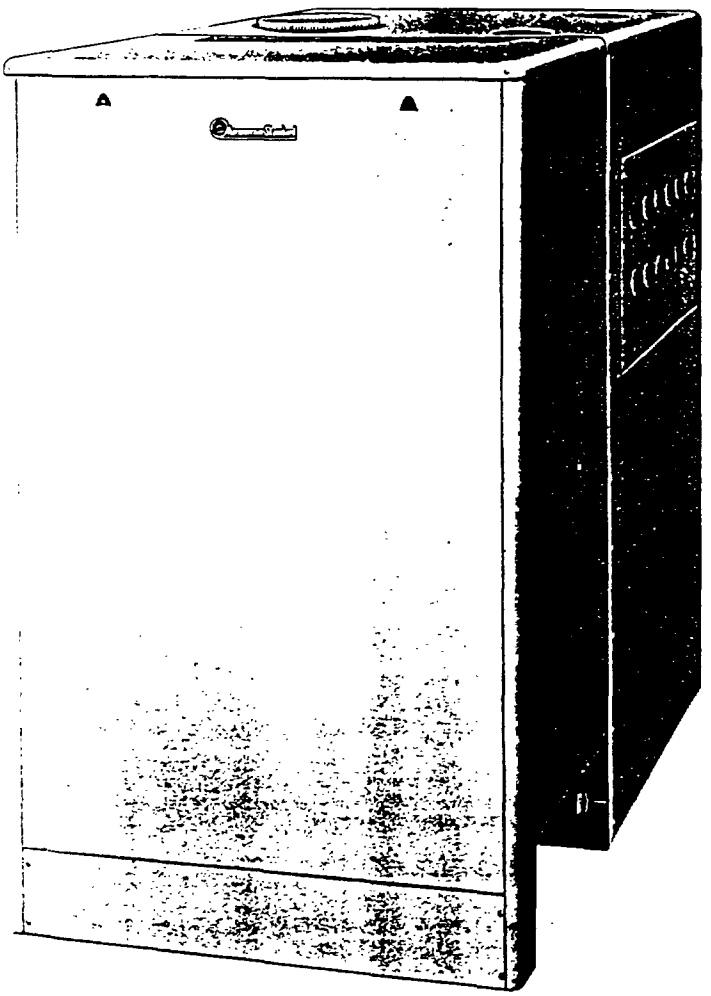

PLAINTIFF'S EXHIBIT

ASI-273

00214

[illegible] durable performer

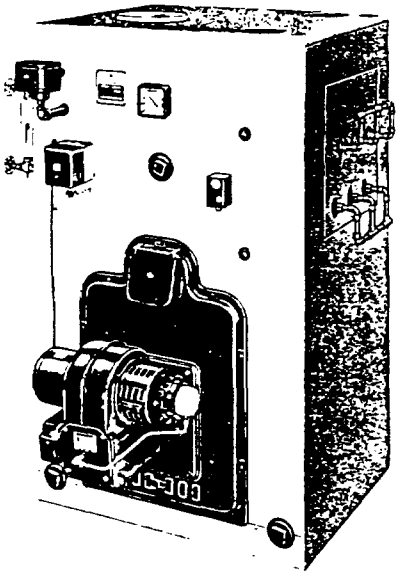

steam boiler illustrated

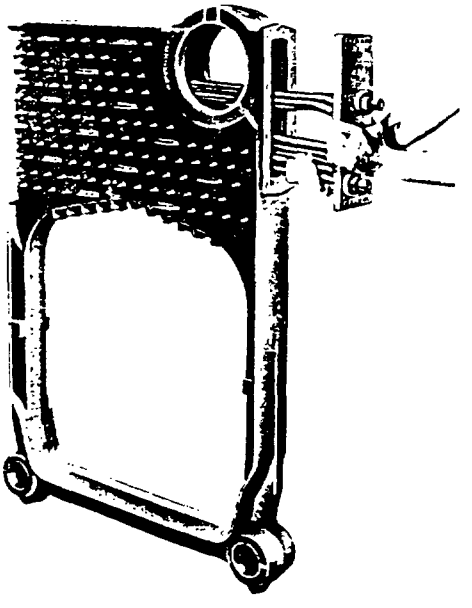

The A-5 oil-fired unit is designed for installation in large homes and small to medium-size apartments and commercial buildings. This big performance boiler has been engineered specifically for oil operation and is available as a boiler-burner unit or boiler only in a full range of eight sizes for hot water or steam application, with I=B=R approved ratings in the 195,800–622,700 Btu hr range. The A-5 is built, for long-lasting efficiency and easy, low-cost installation. **Vertical flue design** reduces section weight, speeds heat circulation; unique **tankless hot water heater** adapts to meet varying domestic requirements; rugged **cast iron sections** assure long, dependable service; **wet base construction** eliminates need for special base, keeps floor cool, **pre-cast combustion chamber** saves on installation time; and American-Standard **precision burners** are tested for peak oil heating performance.

The A-5 boiler is unmatched in its ability to meet a wide variety of domestic hot water needs. A unique tankless heater arrangement lets you match expanding domestic hot water requirements (from 4 to 16 gpm) by the insertion of extra tankless water heaters into A-5 center sections. No need to install a bigger boiler or separate water heater to handle expanding hot water requirements. A special copper manifold assembly, pre-fabricated to cut installation time and cost, connects multiple heaters in parallel. Special center sections, with heater opening, are supplied at no extra cost on all A-5 boilers specified for tankless use. This special A-5 tankless heater arrangement also permits the use of split systems to serve different domestic hot water needs. For versatility and flexibility in meeting domestic hot water needs, the A-5 is the answer.

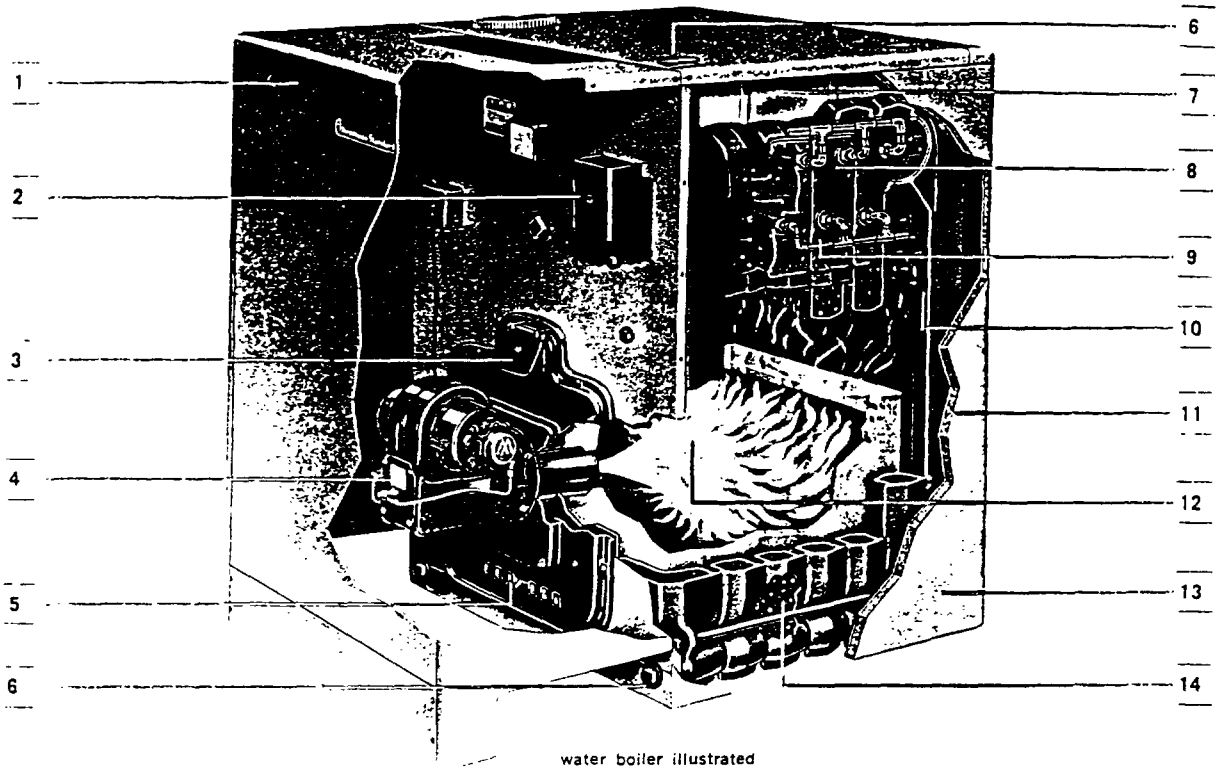

water boiler illustrated

1— —matches jacket and has removable front panel for ready access to burner and controls; arch-type openings to provide ample air for combustion and circulation.

2— —all controls are mounted on front of boiler for easy maintenance and adjustment.

3— —permits convenient flame viewing; simplifies burner and control adjustment while boiler is firing. A ⅛-inch pipe tap is provided for draft test purposes.

4— —is available in five models for flange mounting on boilers. Burners are laboratory tested for clean, efficient firing in all A-5 boiler-burner units.

5— —built into the front of the boiler; provides for easy accurate adjustment of secondary air.

6— —4-inch supply (top) and 2½-inch return (bottom) located in both front and back sections, eliminate need for header on largest steam assembly.

7— —aluminized steel construction permits smaller flue pipe sizes; makes A-5 readily adaptable for gas firing.

8— ater heater—internal tankless type with finned copper tubing. Unique arrangement permits flexibility in meeting domestic hot water requirements ranging from 4 to 16 gpm.

9— eater manifold—connects multiple water heater in parallel and is pre-assembled for quick installation.

10— oiler sections—are ruggedly constructed of cast iron and feature vertical flue design with large 7-inch top nipple port. Off-center location of nipple port speeds up circulation; projecting studs and horizontal bars extract maximum heat from combustion gases. Sections are easily cleaned from left side and are tested at 2½ times operating pressure.

11— sulation—heavy glass fiber insulation prevents wasteful heat loss, keeps jacket cool.

12— ombustion hamber—high-temperature, pre-cast combustion chamber—provided for all assemblies—heats quickly and evenly.

13— acket—smartly-styled of sturdy steel in sparkling gray finish with modern radius corners.

14— et ase construction—provides extra heat-absorbing bottom surface and increased water content. Waterways completely surround combustion area, extend beneath boiler, keep floor cool.

A-5 ratings

boiler numbers		gross I=B=R output water & steam (Btu/hr)	net I=B=R ratings ■		I=B=R burner capacity (gph) ●	chimney		water content (gallons)	
steam	water		water & steam (Btu/hr)	steam (sq. ft.)		size (inches)	height (feet)	steam boiler	water boiler
A-504-SB(T)	A-504-WB(T)	261,000	195,800	816	2.55	8 x 12	15	45.6	57.7
A-505-SB(T)	A-505-WB(T)	346,000	259,600	1082	3.30	8 x 12	20	52.4	66.7
A-506-SB(T)	A-506-WB(T)	426,000	319,600	1332	4.00	12 x 12	20	59.3	75.5
A-507-SB(T)	A-507-WB(T)	508,000	381,100	1588	4.75	12 x 12	20	66.1	84.5
A-508-SB(T)	A-508-WB(T)	588,000	441,100	1838	5.55	12 x 16	25	72.9	93.4
A-509-SB(T)	A-509-WB(T)	668,000	501,100	2088	6.30	12 x 16	25	79.8	102.3
A-510-SB(T)	A-510-WB(T)	748,000	561,100	2338	7.00	12 x 16	25	86.6	111.3
A-511-SB(T)	A-511-WB(T)	830,000	622,700	2594	7.65	16 x 16	30	93.4	120.2
A-504-S(T)	A-504-W(T)	261,000	195,800	816	2.55	8 x 12	15	45.6	57.7
A-505-S(T)	A-505-W(T)	346,000	259,600	1082	3.30	8 x 12	20	52.4	66.7
A-506-S(T)	A-506-W(T)	426,000	319,600	1332	4.00	12 x 12	20	59.3	75.5
A-507-S(T)	A-507-W(T)	508,000	381,100	1588	4.75	12 x 12	20	66.1	84.5
A-508-S(T)	A-508-W(T)	588,000	441,100	1838	5.55	12 x 16	25	72.9	93.4
A-509-S(T)	A-509-W(T)	668,000	501,100	2088	6.30	12 x 16	25	79.8	102.3
A-510-S(T)	A-510-W(T)	748,000	561,100	2338	7.00	12 x 16	25	86.6	111.3
A-511-S(T)	A-511-W(T)	830,000	622,700	2594	7.65	16 x 16	30	93.4	120.2

■ Net I=B=R ratings shown include allowance for normal piping and pickup load. American-Standard should be consulted before selecting a boiler for installations having unusual piping and pickup requirements.

● For complete information on burners and nozzles furnished with A-5 boiler-burner units, see chart on page 8.

Note: Suffix "B" denotes boiler-burner unit; "S" denotes steam; "W" denotes hot water; "T" denotes unit with tankless heater section(s).

control sets for A-5 boiler-burner units

control set	control function	description
standard		
no. 11 steam	boiler without domestic hot water	thermostat, limit control
no. 13 water	boiler without domestic hot water, immersion control	thermostat, limit control
optional		
no. 12 steam	boiler with year 'round domestic hot water, built-in tankless heater	thermostat, limit control immersion operating control
no. 34 water	boiler without domestic hot water, constant circulator operation	thermostat, circulator-limit immersion control
no. 36 water	boiler with year 'round domestic hot water, built-in tankless heater, using circulator	thermostat, immersion control relay combination
no. 36-Z water	one no. 36-Z control set is required for each zone in addition to the first zone which is controlled by no. 36 control set.	thermostat, zone control relay

A-5 oil-fired boilers are designed and built to comply with the American Society of Mechanical Engineers' Code and bear their approval symbol. Ratings have been approved by the Institute of Boiler and Radiator Manufacturers.

dimensions and tappings

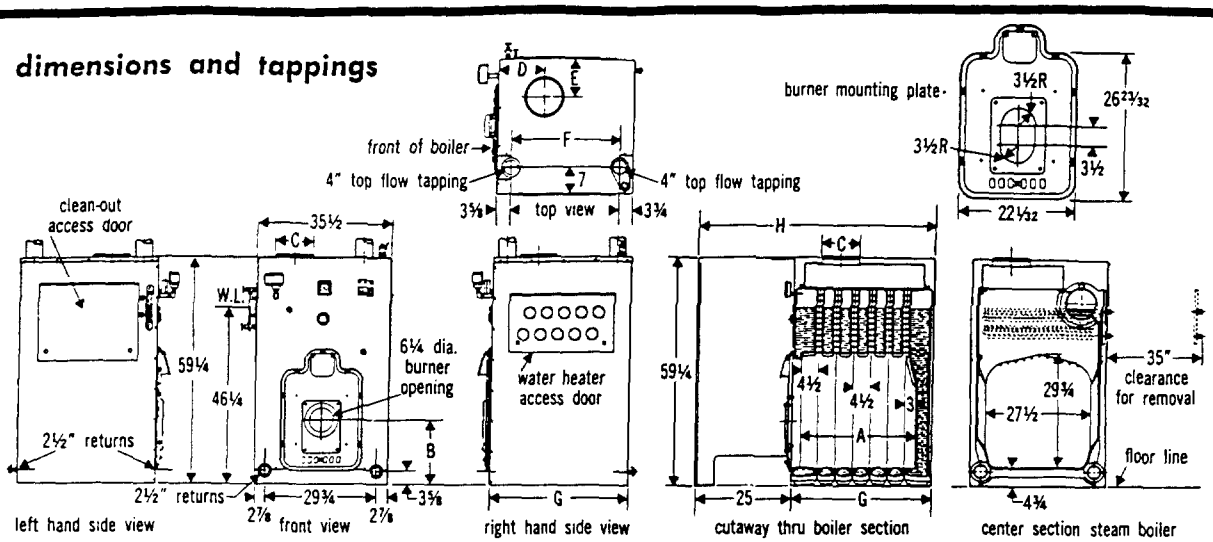

boiler number	number of sections	number and size of tappings		dimensions (inches)							
		flow (in.)	return (in.)	A	B	C	D	E	F	G flush jacket	H jacket extension
A-504	4	(2)-4	(4)-2½	16½	13¼	9	11½	9½	15½	22⅞	47⅞
A-505	5	(2)-4	(4)-2½	21	16¾	9	11½	9½	20	27⅜	52⅜
A-506	6	(2)-4	(4)-2½	25½	16¾	10	12	10	24½	31⅞	56⅞
A-507	7	(2)-4	(4)-2½	30	16¾	10	12	10	29	36⅜	61⅜
A-508	8	(2)-4	(4)-2½	34½	16¾	10	12	10	33½	40⅞	65⅞
A-509	9	(2)-4	(4)-2½	39	16¾	12	13	11	38	45⅜	70⅜
A-510	10	(2)-4	(4)-2½	43½	16¾	12	13	11	42½	49⅞	74⅞
A-511	11	(2)-4	(4)-2½	48	16¾	12	13	11	47	54⅜	79⅜

assemblage of sections

boiler number	arrangement of sections from front of boiler (with tankless heater opening)											arrangement of sections from front of boiler (less tankless heater opening)										
	1	2	3	4	5	6	7	8	9	10	11	1	2	3	4	5	6	7	8	9	10	11
A-504	FX	CT	CT	BX	—	—	—	—	—	—	—	FX	C	C	BX	—	—	—	—	—	—	—
A-505	FX	CT	CT	CT	BX	—	—	—	—	—	—	FX	C	C	C	BX	—	—	—	—	—	—
A-506	FX	CT	CT	CT	C	BX	—	—	—	—	—	FX	C	C	C	C	BX	—	—	—	—	—
A-507	FX	CT	CT	CT	C	C	BX	—	—	—	—	FX	C	C	C	C	C	BX	—	—	—	—
A-508	FX	CT	CT	CT	C	C	C	BX	—	—	—	FX	C	C	C	C	C	C	BX	—	—	—
A-509	FX	CT	CT	CT	CT	C	C	C	BX	—	—	FX	C	C	C	C	C	C	C	BX	—	—
A-510	FX	CT	CT	CT	CT	C	C	C	C	BX	—	FX	C	C	C	C	C	C	C	C	BX	—
A-511	FX	CT	CT	CT	CT	C	C	C	C	C	BX	FX	C	C	C	C	C	C	C	C	C	BX

Legend

FX—front connecting section

CT—center section with tankless heater opening

C —center section without tankless heater opening

BX—back connecting section

control tappings

location on boiler	size (inches)	control used	
		steam	water
F	2½	low water cut-off	not used
G	¾	pressure limit control	temperature limit control
H	¾	operating control, tankless heater	not used
J	½	pressure gauge	combination altitude gauge and thermometer
K	¾	not used	operating control, tankless heater
L	¾	not used	reverse acting control

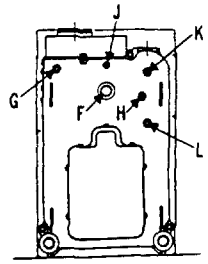

Note: 2-inch blow-off in back section.
2-inch safety or relief valve on top of back section.

00218

no. 530 tankless heater ratings

boiler number	number of heaters	ratings■ (gpm)
A-504—A-511	1	4
A-504—A-511	2	7
A-505—A-511	3	10
A-508—A-511	4	13
A-510—A-511	5	16

■Gallons of water per minute raised from 40°F to 140°F with 200°F boiler water temperature.

The above table shows the recommended number of heaters to be used with each boiler and the ratings attained if more than one heater is connected in parallel. Additional heaters can be added if the heaters are serving different systems and it is not likely that heaters will all be in use at the same time.

No. 530 tankless heater available for single purpose or multiple parallel hook-up. Copper manifolds (illustrated below) for two, three or four-heater parallel arrangement furnished with No. 530 heater if specified.

Provision for tankless heater is available when specified. If suffix letter "T" is added on order to unit or boiler numbers, the following number of center sections with heater openings will be furnished.

boiler or unit number	number of openings
A-504-T	2
A-505-T A-506-T A-507-T A-508-T	3
A-509-T A-510-T A-511-T	4

Note: Additional openings can be specified on order. Cover plate for water heater openings will be furnished if specified on order for "T" type units and boilers.

tankless heater piping

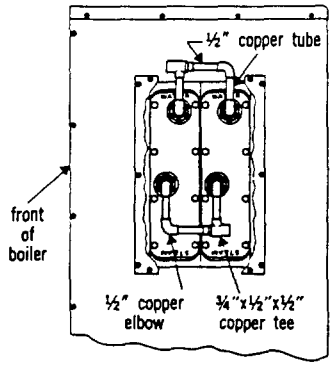

2-heater manifold piping

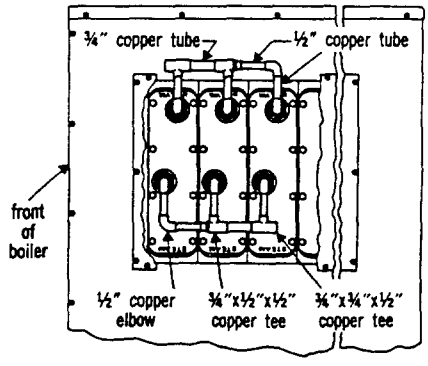

3-heater manifold piping

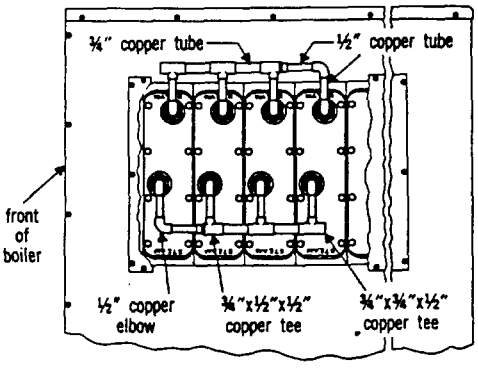

4-heater manifold piping

Note: Single arrangement or any combination of the above manifold piping arrangements can be used. Water heaters are assembled in boiler starting with the second section from front of boiler. Heater cover plates are marked "steam" and "water." When installing in a steam boiler the word "steam" should read at the top, when installing in a water boiler, the word "water" should read at the top.

minimum piping recommendations

hot water

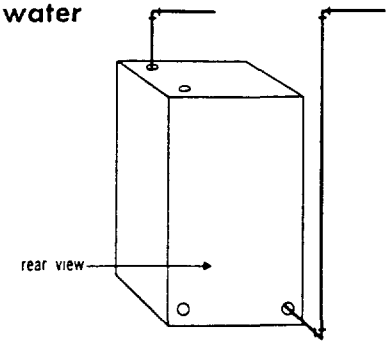

boiler number	gravity		forced	
	supply (in.)	return (in.)	supply (in.)	return (in.)
A-504	2½	2½	1½	1½
A-505	2½	2½	2	2
A-506	(2)-2	(2)-2	2	2
A-507	(2)-2	(2)-2	2	2
A-508	(2)-2½	(2)-2½	2½	2½
A-509	(2)-2½	(2)-2½	2½	2½
A-510	(2)-2½	(2)-2½	2½	2½
A-511	(2)-2½	(2)-2½	2½	2½

steam

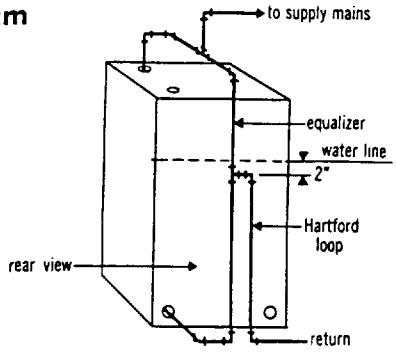

boiler number	riser (in.)	return (in.)	equalizer (in.)
A-504	2½	1¼	1½
A-505	3	1¼	1½
A-506	3	1¼	1½
A-507	4	1½	2
A-508	4	1½	2
A-509	4	1½	2
A-510	4	1½	2
A-511	4	1½	2

combustion chamber dimensions

Heat Lib-O-Rator molded refractory combustion chambers

A-504■

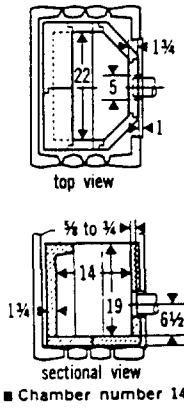

A-505 through A-511

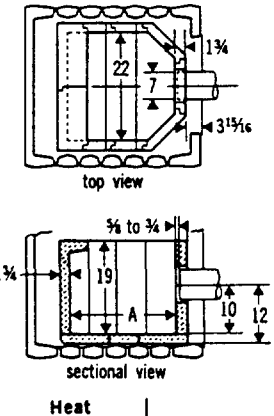

■ Chamber number 14-A

boiler number	Heat Lib-O-Rator chamber number	A (in.)
A-505	15-A	15½
A-506	15-AA	20
A-507	16-A	21½
A-508	16-A	21½
A-509	17-A	27½
A-510	17-A	27½
A-511	17-A	27½

Heat Lib-O-Rator refractory combustion chambers are standard equipment on A-5 boiler-burner units; optional with boiler only.

fire brick refractory combustion chambers

A-504

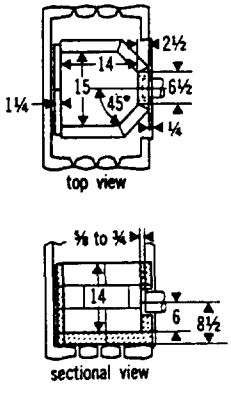

A-505 through A-511

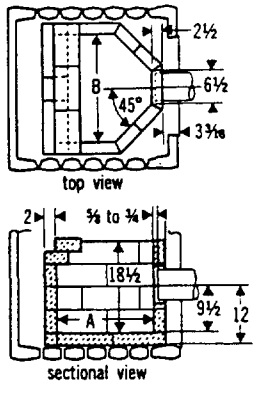

boiler number	A (in.)	B (in.)
A-505	14½	18
A-506	18	18
A-507	20	22
A-508	22	22
A-509	24	22
A-510	24	22½
A-511	26	22½

oil burner specifications

boiler number	burner number	diameters—(inches) choke	diameters—(inches) disc	I=B=R burner capacity (gph)	nozzle data: number required	nozzle data: gph each	nozzle data: spray angle	nozzle data: type
				mounting)				
A-504	DH-5■			2.55	one	2.50	60°	solid
A-505	45WU-3606	3⅜	2¼	3.30	two	1.65	70°	solid
A-506	45WU-3606	3⅜	2¼	4.00	two	2.00	70°	solid
A-507	62A-7056-1	5	3	4.75	two	(1)-2.25	80°	hollow
						(1)-2.50	80°	hollow
A-508	62A-7056-1	5	3	5.55	two	2.75	80°	hollow
A-509	62A-7056-1	5	3▲	6.30	two	(1)-3.00	80°	hollow
						(1)-3.25	80°	hollow
A-510	96-7506-1	5	3⅛	7.00	two	3.50	80°	solid
A-511	96-7506	5	3⅛	7.65	two	(1)-3.50	80°	solid
						(1)-4.00	80°	solid

■ One stage fuel unit is regular equipment on DH-5.
Two stage fuel unit is optional on DH-5, standard on all other burners on chart.

▲ Remove disc when installed in boiler, if firing rate exceeds 5.75 GPH.

Electronic flame safeguard equipment – 62A-7056-I-F burner with electronic flame safeguard control is available instead of 62A-7056-I burner for A-507, A-508 and A-509 boiler-burner units. 96-7506 burner is available for A-510 boiler-burner unit.
For installation requiring Factory Mutual Approval and in states and municipalities with regulations more stringent than Underwriters' Laboratories, Inc., oil burners with special electronic flame safeguard controls are available for A-5 boiler-burner units as follows: 62A-7056-I-FFM burner for A-507, A-508, and A-509; 96-7507 burner for A-510 and A-511.

APPROVAL: American-Standard oil burners (115 volt/60 cycle) are listed with Underwriters' Laboratories, Inc. for No. 1 and No. 2 grades of fuel oil, distillate or catalytic cracked. They are approved by the New York City Board of Standards and Appeals, the State Fire Marshal of the Commonwealth of Massachusetts and the Dept. of State Police, State of Connecticut.

sample specification for A-5

Contractor shall furnish and install, as indicated on plans, ... oil fired boiler(s) having a firing rate of ..... gph and an I=B=R gross output of ..... Btuh. Boiler(s) shall be constructed of cast iron in accordance with A.S.M.E. requirements for low pressure heating boilers and bear the A.S.M.E. symbol. Each section shall be factory tested at 2½ times maximum working pressure of 50 lbs. for water. Boiler(s) shall have I=B=R ratings. Boiler(s) shall be composed of cast iron sections with vertical flues. Manufacturers will furnish boilers with an aluminized steel canopy. Water or steam trim as required. Oil burners shall include controls as herein described. (Note: include description of controls as required and other burner features and combustion chamber as desired.)

Boiler shall be equipped with tankless heater(s) having a rating of ..... gpm. If more than one heater is required to meet requirements a copper manifold factory assembled will be installed by the contractor as recommended by the manufacturer to connect the heater in parallel arrangement.

American-Standard
PLUMBING AND HEATING DIVISION
AMERICAN RADIATOR & STANDARD SANITARY CORPORATION
40 WEST 40TH STREET NEW YORK 18, NEW YORK

00221

orm No 433-2 (Rev.)