PLAINTIFF'S EXHIBIT

GP-1089

1972

gypsum wallboard

for wall and ceiling systems

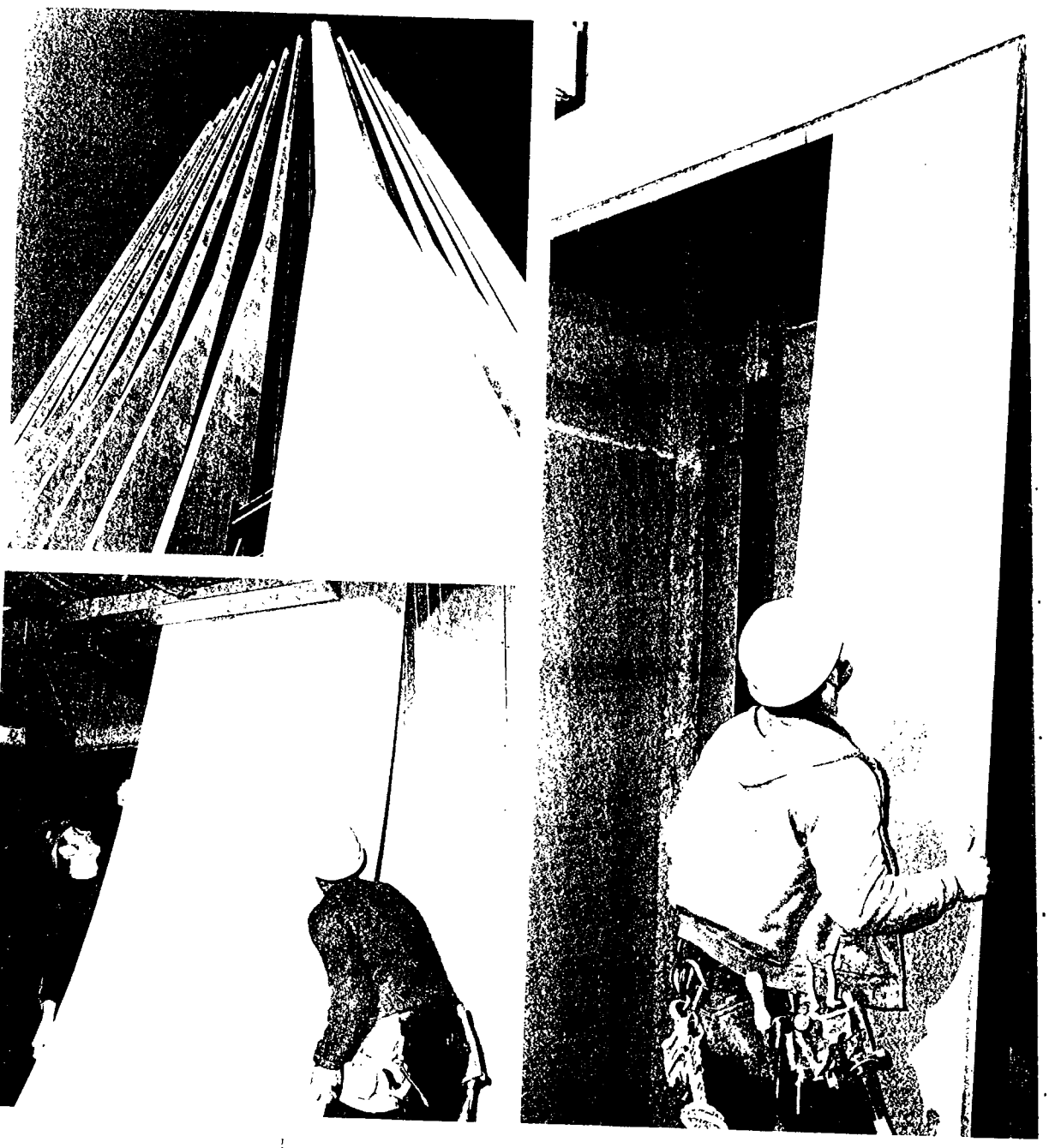

Georgia-Pac Corporation 9 FINISHES Gypsum Drywall
January, 1972

Georgia-Pacific Corporation 9 FINISHES Gypsum Drywall
January, 1972

SGP 0025489

INDEX

G-P Wallboard Products Description 3, 4, 5
G-P Wallboard Edge Description 5
G-P Joint System Products Description 5, 6
Wall & Column Construction Data 7, 8, 9, 10, 11
Floor & Ceiling Construction Data 12
Specification Directory 13
System Installation Details 14, 15, 16, 17, 18, 19
Water Resistant Wallboard 20
Column Fireproofing 20
Masonry Wall Application 21
Specifications for wood or metal framing 22
Drywall Nails and Screws 23
Eternawall™ Vinyl Surfaced Wallboard 24
G-P Shaft Liner™.....25, 26, 27, 28, 29, 30, 31
Georgia-Pacific Distribution Centers.....back cover

COVER: 40 story First National Bank Building, Portland, Oregon.
Charles Luckman & Associates, Architects, Los Angeles, California

WARRANTY

The assemblies shown in this brochure and information there-to, have been developed with due regard to practical construction methods. However, since the Georgia-Pacific Gypsum Division does not have any prior knowledge of a specific building design and its construction or the methods of application used with its products, no warranty of performance is made. All test results have been obtained under controlled laboratory testing conditions where environmental variables are reduced to a minimum. In the field, such laboratory conditions are not always met, since many other variables may be introduced. Laboratory results may exceed field test results but the laboratory tests under controlled conditions are the only logical way to compare the performance of different assemblies.

The Gypsum Division of the Georgia-Pacific Corporation makes no warranty that the performance of assemblies in the field will have a performance equal to or better than that developed in the test.

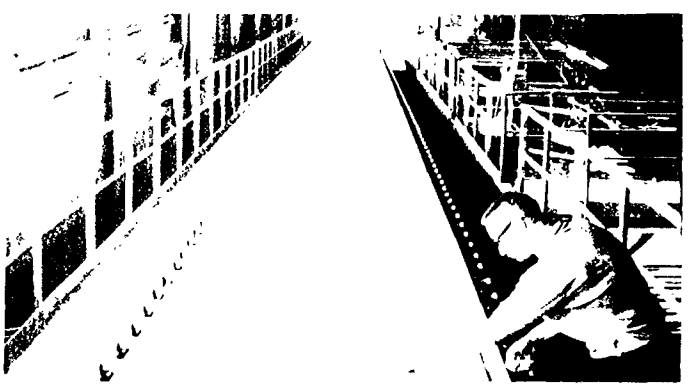

LIMITATIONS

Georgia-Pacific interior gypsum wallboards are non-load bearing panels and are not recommended for use under extremely moist conditions. G-P Tile Backer Board, however, is the only exception to the moisture limitation. ¼" wallboard should only be used as an application over existing walls. Maximum framing spacing for gypsum wallboard up to ⅜" thick is 16" on center. Maximum framing spacing for ½" and ⅝" panels is 24" on center.

Because of the limitations of manufacturing equipment, the maximum length available in gypsum wallboard is 16 feet.

TESTING FACILITIES

Georgia-Pacific's major research and development center, a showplace for the nation's gypsum industry, is located at Tigard, Oregon.

The two buildings house research, technical operations and the administrative offices. Since most of the research work is of a confidential nature, there are no "public tours" such as the company conducts at many of its manufacturing plants.

The new facility replaces former research and development facilities located for many years at Paoli, Pa., near Philadelphia, where G-P's gypsum division headquarters were located before they were moved to Portland.

The two adjacent structures, with 16,868 square feet of floor area, are equipped with many types of research and testing devices.

Sixteen staff technicians under the direction of a research and development manager, and a technical manager, develop new products and maintain quality-control for products ranging from gypsum wallboard, Firestop with fire ratings up to three hours, sound deadening board, Denscote plasters, to joint systems and even dental plasters.

G-P holds patents on several developments such as use of glass fibers to strengthen gypsum wallboards, high strength Densite plaster and special lath for veneer plaster. Other patents are applied for, and the lab is carrying on a vigorous product development program.

The technical department conducts field and manufacturing plant services, solving difficult technical problems and develops improved manufacturing methods.

Gypsum products are tested several ways at the Tigard lab. Wallboards are subjected to severe stresses and extreme temperatures to make stronger and more fire resistant gypsum products.

Sound tests are conducted to develop wall and floor/ceiling systems to assure "sound privacy" for today's residential and commercial construction.

Basic research includes gypsum crystal studies and the mechanics of hydration.

Technicians continually check such G-P gypsum products as Tile Backer board for installations where water is prevalent, insulating boards, vinyl-surfaced Eternawall, and other products including partition assemblies, plasters, pottery and metal moulding plasters and agricultural gypsum for farm applications.

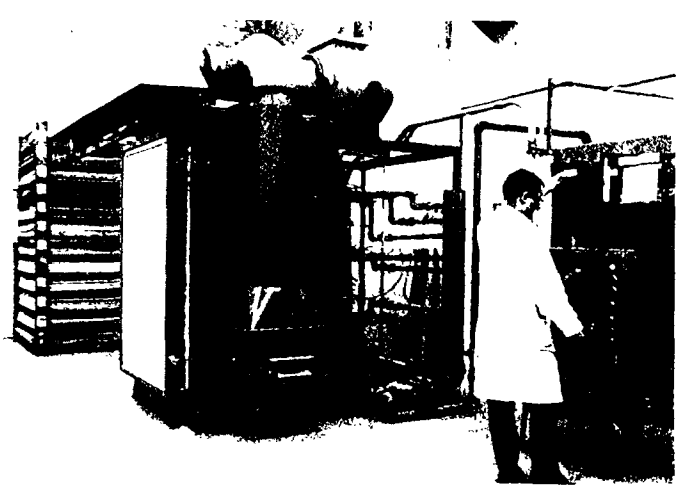

SGP 0025490

WALLBOARD PRODUCTS

Georgia-Pacific Gypsum Division manufactures a full range of products to meet the needs of the construction industry both specific and general. The versatile gypsum product provides builders with lightweight construction materials that are workable, fire and noise resistant and time saving. G-P research facilities have responded to the industry's requests and have developed the following multi-use, highly reliable, low cost products.

G-P WALLBOARD EDGES

T—Tapered	B—Beveled (Special Order)
S—Square	T & G—Tongue and Groove
RE—Tapered with Round Edge	V—Modified Beveled Edge

PRODUCT DESCRIPTION	Thickness	Widths	Lengths	Edge
G-P REGULAR WALLBOARD				
G-P Regular Gypsum Wallboard is faced with a strong, cream-colored paper which will accommodate any type of decorative treatment. The back paper, which is gray, is as strong as the face paper. The ½" and ⅝" wallboard with Tapered Round edges are recommended for single layer application in new construction. They are designed to be reinforced with G-P Joint System products resulting in a smooth, seamless surface. Square edges are recommended for use where exposed joints are acceptable. The resistance to fire exposure and sound transmission increase with the use of greater board thickness and the number of layers of board used. Bevel edge can be used where a panel effect is desired.	¼" ⅜" ½" ⅝"	4'	6' to 16' in even feet	T, S, B, RE
G-P FIRESTOP® WALLBOARD				
G-P Firestop carries a 45 minute to 3 hour fire resistant rating in various wood and steel wall and floor/ceiling assemblies. Unexpanded vermiculite in the core balances gypsum shrinkage by expanding when exposed to heat, while the textile glass filaments keep the core intact even after its chemically combined water has been released, giving a thermal stabilized core.	½" ⅝"	4'	6' to 16' in even feet	T, S, B, RE
G-P ¼" GYPSUM SOUND DEADENING BOARD				
G-P ¼" Incombustible Gypsum Sound Deadening Board meets the requirements of the most sophisticated sound control systems available with the added convenience of being one of the easiest sound control materials to install. It is designed and formulated for high sound transmission loss, structural strength and incombustibility. It has a distinctive green face paper. When applied over 2½" steel studs or 2 x 4 wood studs, one layer of ½" G-P Firestop Type XXX over one layer of ¼" Gypsum Sound Deadening Board gives a 1-hour fire resistive wall and a 45 S.T.C.	¼"	4'	8'	S
G-P REGULAR TILE BACKER BOARD				
This is a water-resistant gypsum product with a light blue face paper, designed for use as a base for the adhesive application of ceramic, metal or plastic tile. The gypsum core consists of incombustible gypsum rock, combined with an emulsion giving high water resistance. Ideal for bathrooms, kitchens, powder rooms and other moisture areas G-P Tile Backer Board can be erected as easily as regular wallboard and requires no finishing of joints or nail heads with joint treatment nor further waterproofing under tile applied adhesively unless required by local code.	½"	4'	8' to 12'	T
G-P FIRESTOP® TILE BACKER BOARD				
Same as Regular Tile Backer Board plus the addition of unexpanded vermiculite and glass fiber reinforcement which gives increased fire protection and strength. Where fire rated assemblies are required in areas subject to moisture, such as partitions between bathrooms and other interior areas, most building codes allow the use of G-P Firestop Tile Backer Board. The use of ⅝" Firestop Tile Backer will give the same fire resistant rating as other firestop board.	⅝"	4'	8' to 12'	T
G-P REGULAR INSULATING WALLBOARD				
Regular Insulating Gypsum Wallboard is regular gypsum wallboard, with bright aluminum foil laminated to the back surface. In a single layer application it provides the advantages of regular gypsum wallboard plus having effective insulation and vapor barrier qualities A separate and continuous vapor barrier is supplied on the warm side of the wall when G-P Insulating Gypsum Wallboard is installed. The aluminum foil, facing a ¾" minimum space, reflects 90% of radiant heat, providing insulation qualities equal to ½" of fiberboard insulation (tested by U. S. Bureau of Standards). Panels must be installed with foil side against the studs. To have reflective insulation value, FHA requires the foil to face a minimum air space of ¾".	⅜" ½" ⅝"	4'	6' to 16'	T, S, RE
G-P FIRESTOP® INSULATING WALLBOARD				
This is the regular insulating gypsum wallboard with the addition to the core of unexpanded vermiculite and glass fiber content for increased fire protection. Through the proper use of this product desired fire-rated assemblies can be achieved.	⅝"	4'	6' to 16'	T, S, RE

PRODUCT DESCRIPTION	Thickness	Widths	Lengths	Edge
G-P REGULAR ETERNAWALL™—VINYL SURFACED WALLBOARD				
Standard Line Colors—Avocado, Gold, Flax, White, Beige, Stucco, Buff, Willow Green, Fawn, Snowdrift White, Alabaster, Tangerine, Cherry, Pecan and American Walnut. This panel has the vinyl surface factory laminated to Regular Gypsum Wallboard. Available in a variety of colors and textures, it provides beauty and utility to commercial, institutional and home interiors. Eternawall is strong and resilient. The solid gypsum core is incombustible. Eternawall colors won't fade. The deep linen-textured vinyl surface can be scrubbed without damage to color, texture or design. Because of its ability to take hard wear and to resist stains, Eternawall is ideal for restaurants, hotels, clubs, and hospitals as well as home use. It is also ideally suited for movable partitions.	½" (Special order 3/8" & 5/8")	4'	8' (Other lengths available on special order.)	V
G-P FIRESTOP® ETERNAWALL™— VINYL SURFACED WALLBOARD				
This panel has the vinyl surface factory laminated to a Firestop panel which has unexpanded vermiculite and glass fibers added to the core to give it additional fire resistance. With this technically designed gypsum core, a 1 hour or greater fire rating may be obtained on wall assemblies. Same colors available as with regular Eternawall.	½" 5/8"	4'	8' (Other lengths available on special order.)	V
G-P FIRESTOP® GYPSUM SHEATHING				
Treated—G-P Firestop Gypsum Sheathing consists of incombustible gypsum rock combined with an asphalt emulsion to provide high resistance to water. All G-P Firestop Gypsum Sheathing meets ASTM C79-67, including requirement for water resistance. This eliminates the need for building paper (except where required by local building code). An **untreated** gypsum sheathing is available. The 2' wide sheathing is made with precision-cut tongue and groove edges to provide a structurally strong and stable wall. "V" tongue and groove edges fit snugly, minimizing wind infiltration. The 4' wide square edge sheathing, applied vertically, completely eliminates the need for corner bracing. It is designed to meet requirements of FHA Technical Circular 12.	½"	2' 4'	8' 8'	T & G S
G-P GYPSUM FIRESTOP BACKER BOARD				
G-P 5/8" Firestop Gypsum Backer is used as a backing for decorative surface treatments of acoustical plasters, tile, plywood and various veneers. A single layer application of 5/8" G-P Firestop Gypsum Backer on both sides of wood or steel framing, enables loadbearing or non-loadbearing wall assemblies to resist temperatures rising to 1700° F. in the ASTM standard time temperature curve for one hour. Firestop Gypsum Backer consists of a gypsum core with unexpanded vermiculite, reinforced with literally miles of high tensile strength glass fibres, firmly bonded to a fibrous gray paper on both sides.	½" 5/8"	2' & 4'	8' to 16'	S, T & G
G-P REGULAR BACKER BOARD				
G-P Gypsum Backer, designed for first or base layers in field lamination of gypsum wallboards, for acoustical tile and other compatible materials. Provides low cost, even surfaces for further decorative treatments. It may be applied over loadbearing or non-loadbearing wood or metal framing with nails, screws or staples.	3/8" ½" 5/8"	2' & 4'	8' to 16'	S, T & G
PREDEC™ TEXTURED GYPSUM				
This combination of non-combustible gypsum wallboard with factory applied, distinctive, evenly balanced textures is a new development in the construction industry. The textures are baked on and are available in 2 patterns. The panels are 5/16", ½" and 5/8" thick with square edges. The texture is a thermo-set, water resistant paint available in beige, yellow, white and light green. This product eliminates job site finishing and installation time. It is impact and abrasion resistant and ideal for residential construction, factory built mobile and modular homes and movable or fixed partitions. It can be cleaned with a damp cloth and mild soap and water. PREDEC has a flame spread rating of 20.	5/16" (½" & 5/8" special order)	4'	cut to size	S
SHAFT LINER™				
G-P Shaft Liner is a solid, laminated gypsum board partition for enclosing elevator shafts, stairs, smoke towers and air ducts. It is a non-load bearing wall, designed for resistance to air pressures without excess deflection. This system can save over 20 lbs. per square foot over masonry and is noncombustible, can be erected from one side and eliminates the need for scaffolding. The partition consists of a basic prelaminated core 1 5/8" thick by 24" wide which fits into a top metal "J" track and bottom "L" runner. Metal "T" splines separate each core unit; and the shaft liner is then secured to the "T" splines and both top and bottom runners. This system was fire tested in accordance with ASTM E119-67. G-P shaft liners available in lengths up to 16', but with G-P's own auxiliary bracing system heights beyond 16" are attainable. Various fire resistive ratings available.	1 5/8" Core plus facing layers	2'	cut to size	S

SGP 0025492

PRODUCT DESCRIPTION	Thickness	Widths	Lengths	Edge
G-P 1" COREBOARD				
1" Gypsum Coreboard is available in two styles. a. A homogenous core with a tongue and grooved joint b. Two layers of ½" backer board, laminated. 1" Gypsum Coreboard is used for the core material in various, all-gypsum partition assemblies.	1"	2'	Custom cut up to 14'	S, T & G
G-P SOFFIT BOARD				
G-P Gypsum Soffit Board is used on exterior soffits where not exposed directly to the weather. It's an inexpensive soffit material for schools, shopping center malls, apartments and houses. It finishes and decorates like interior gypsumboard with no nails or joints showing. It has light blue face paper for identification.	½", ⅝"	4'	8'	RE
G-P FIRE FIGHTER GYPSUMBOARD				
New product designed for use on roofs, over rafters, and under sheathing and roof covering. Tests prove it blocks roof fires from entering attic and living areas. It has a special core and paper.	½"	2'	8'	S

TAPERED EDGE:

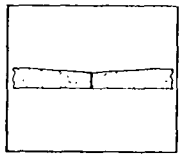

The tapered edge was originally called the "recessed edge" but is now commonly called tapered, because of the incline from the edge to about 2" into the board. This taper allows for tape and joint treatment to be applied and the completed job will be flat, smooth and monolithic.

BEVELED EDGE:

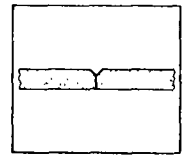

The beveled edge is a suitable edge to give a paneled effect. After fasteners are covered with a compound the board is ready for paint with grooves exposed.

TAPERED w/ROUND EDGE:

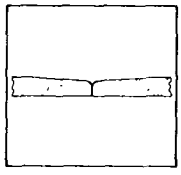

Georgia-Pacific round edge (RE) gypsum wallboard can be used for wall and ceilings in both new construction and remodeling. It is designed to reduce the beading and ridging problems commonly associated with standard type wallboard. This edge formation provides a stronger, more rigid joint and results in a smoother wall surface.

"V" GROOVED EDGE:

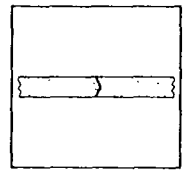

Georgia-Pacific's "V" groove edge (sometimes referred to as the "tongue and groove" edge) was developed especially for sheathing and backer boards, to block moisture (sheathing) or fire (backer board).

SQUARE EDGE:

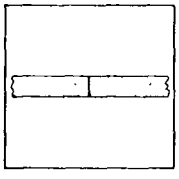

The gypsum wallboard square edge was the original wallboard edge. Initially designed to be a base with a final covering such as wallpaper, paneling, or tile, square edge can be finished with joint compounds to form a clean monothic wall suitable for paint. Also can be used where an exposed joint is acceptable.

MODIFIED BEVELED EDGE:

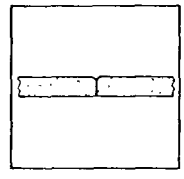

The modified beveled edge is available only on Eternawall panels. This particular edge more readily accommodates the vinyl surface decoration, which is delivered completely edge wrapped. The vinyl surface material is available in 15 patterns and colors.

JOINT SYSTEM PRODUCTS

G-P Joint System products are designed to conceal joints and nail heads and "surface-weld" wallboard panels together. Properly used, these products assure smooth, seamless appearance of walls and ceilings, with joints as strong as the wallboard itself.

G-P BEDDING COMPOUND

Bedding Compound is designed to provide maximum adhesion of tape to the joints and for initial application to nail heads and corner bead. It spreads smoothly and may be hand or machine applied. **Coverage:** 15 lbs. per 1,000 sq. ft. (Used in conjunction with 45 lbs. of Topping Compound.) **25 lb. bags.**

G-P TOPPING COMPOUND

G-P Topping Compound is specifically designed for the second and third coats over the bedding compound. Since it is used only for topping, we are able to reduce the amount of adhesive and incorporate other materials which reduce the shrinkage and make it easier to sand and work. Coverage is approximately 45 lbs. per 1,000 square feet. **Available in 25 and 50 lb. bags.**

G-P TRIPLE DUTY™ JOINT COMPOUND

G-P Triple Duty Wallboard Joint Compound is a vinyl multi-purpose joint system product. A single bag offers taping, topping and texturing. It can be used for all coats in the reinforcing and concealing of joints in gypsum wallboard construction. The binder in Triple Duty, being a vinyl, gives this product a wet life of 30 to 60 days duration. This allows premixing in large quantities prior to application. Triple Duty can be applied using standard hand or mechanical tools. There is low shrinkage and it is easily sanded. When the application is completed, the surface is ready for priming and decoration as desired with no further preparation necessary. **Coverage:** 60 lbs. per 1,000 sq. ft. (12-50 lbs. per 1,000 sq. ft. when used as a texturing material.) **25 and 50 lb. bags.**

G-P READY MIX JOINT COMPOUND

Ready Mix Joint Compound is an easy-working material for embedding the joint reinforcing tape and the filling and finishing of joints in gypsum wallboard construction. Furnished in cans and cartons ready to use, this stable, all-purpose compound is also excellent for use in covering nail heads and forming interior and exterior angles. Ready Mix Joint Compound assures a standard mixture for uniform workability throughout the job. It has a long wet life and will not spoil even when the container is left open. Ready Mix Joint Compound produces an excellent surface for any type of decoration. For best results, the surface should be primed before being decorated. **Coverage:** 5 gal. per 1,000 sq. ft. **Package—1 and 5 gal. cans, 4 gal. cartons.**

G-P ALL PURPOSE JOINT COMPOUND

G-P All Purpose Joint Compound is used for bedding tape, topping, corner bead, nail spotting and texturing. When taping be sure the compound under the tape, and the first coat over the tape is thoroughly dry before applying the next coat over the joints. When used for texturing, for best results, apply a vinyl primer to the entire area before texturing. The texture may be applied with a roller, sponge, brush or sprayed, depending on the type of configuration desired. **Coverage:** 60 lbs. per 1,000 sq. ft. **25 lb. bag and packaged 18 lbs. of compound plus 250′ roll of tape.**

G-P SPEED SET™

G-P Speed Set Joint Compound makes possible the taping and finishing of all wallboard joints within a single day. It can be used for all coats. Speed Set is a setting rather than a drying type of compound, and will not shrink. Comes in two ways—"1 Hour Working Time" and "2 Hour Working Time". For best results, use a primer sealer over surface before painting or texturing. **25 lb. bags.**

G-P LAMINATING COMPOUND

G-P Laminating Compound is an exclusive product formulated to assure adhesion between sheets of wallboard. It is a casein base dry powder product, requiring addition of water only. Easy to mix and easy to apply, it forms a permanent, positive bond. G-P Laminating Compound has been proven effective through many years of actual field use. **Coverage:** Approx. 35 lbs. per 1,000 sq. ft. **25 Lb. Package**

CEILING & WALL TEXTURES

G-P Wall texture is an unaggregated texture compound for hand tool or spray application. When applied with a spray, a splatter or orange peel texture is formed. When applied by hand, a stipple, swirl, or brocade texture can be produced.

G-P Wall texture can be applied immediately after G-P Ceiling overspray wipedown. It is made for fast, volume application. Because of its formulation, G-P Wall texture matches G-P Ceiling textures, without overlap discoloration.

G-P Ceiling textures are designed for spray application over ceilings constructed with gypsum wallboard or concrete. The resulting texture simulates acoustical texture finish. Especially designed for volume operations, these products give unsurpassed economy. The texture dries harder and tighter. The texture maintains a high quality white decorative finish. This texture gives exceptional coverage if used as instructed. **Coverage:** 12-50 lbs. per 1,000 sq. ft. depending upon texture. **25 Lb. Package** wall, **40 Lb.** ceiling.

G-P GRABIT™

G-P Grabit is an adhesive which permits direct attachment of gypsum wallboard to masonry walls. It may be used on poured concrete, cinder block or concrete block walls which are reasonably straight and true and are free from surface treatment, decorations, or protrusions. Grabit may be used on exterior walls which are above grade level without waterproofing. Grabit can be used to adhere gypsum wallboard to polystyrene insulation material.

Adhesion is secure and permanent, with no need for furring strips or fasteners. After being mixed with water as directed, Grabit can be applied with blade or caulking gun. Only four 1″ ribbons are needed for each 4′ wide wallboard panel. The adhesive fills in all normal irregularities in the masonry. In 3 to 4 hours, Grabit sets hard, and join taping and finishing operations may then be started. This adhesive may be used wherever there is need to attach gypsum wallboard to masonry walls: in homes, apartments, hotels, offices, and plants. **Coverage:** Up to ¼ lb. per sq. ft. depending on roughness of base surface. **50 Lb. Package.**

SGP 0025494

G-P WALLBOARD TAPE

G-P Tape is a full 2″ width, "Miracle Crease" spark perforated tape with skived edges and sanded surface both sides. Excellent bonding qualities. Stabilized against shrinkage and movement.

RATING	TEST* REFER.	STC	TEST REFER.	COST INDEX	PART. THICK-NESS	WEIGHT AND SQ. FT.	WALL SURFACE	BLDG. CODE APP	G-P SYST. #	DETAIL INFO PAGE
WOOD PARTITIONS (2" x 4" Studs—16" O.C.)										
25 min.	EST	31	EST	90	4⅜"	5.2	⅜" G-P Gypsum Wallboard Both Sides	ABC	–	–
40 min.	EST	–	BS-234	100	4⅜"	5.9	½" G-P Gypsum Wallboard Both Sides	ABC	–	–
45 min.	U.L. 1	32	EST	110	4⅝"	5.9	½" G-P Firestop Both Sides	BC	–	–
1 hr.	U. 501 (U.L. 5)	34	OR-64-8	115	4⅞"	7.0	⅝" G-P Firestop Both Sides	ABC	–	–
1 hr.	U. 501 (U.L. 5)	34	OR-64-8	125	4⅞"	7.0	⅝" G-P Firestop Tile–Backer Board Both Sides	ABC	–	–
1 hr.	G.A.	–	BS-225	135	5⅛"	8.2	⅜" G-P Gypsum Wallboard, 2 layers, Both Sides	A	–	–
1½ hr.	EST	37	CR-64-11	135	5½"	9.5	⅝" G-P Firestop, 1 Layer, One Side, 2 Layers Other Side	–	–	–
1½ hr.	G.A.	39	NBS	140	5⅝"	9.9	½" G-P Gypsum Wallboard, 2 Layers, Both Sides	A	–	–
2 hrs.	T-194	41	OR-64-12	160	6⅛"	12.0	⅝" G-P Firestop, 2 Layers, Both Sides	ABC	110	E/15
WOOD PARTITIONS (2" x 4"—16" O.C. with ¼" Gypsum Sound Deadening Board)										
1 hr.	U. 312 (U.L. 30)	45	BW-27-FT	145	5⅛"	7.96	½" G-P Firestop, 1 Layer Strip Laminated Over ¼" Gypsum Sound Deadening Board, 2 Sides	ABC	100	E/14
1 hr.	U. 312 (U.L. 30)	47	BW-28-ST	160	5⅜"	8.3	⅝" G-P Firestop, 1 Layer Laminated over ¼" Gypsum Sound Deadening Board, Both Sides	ABC	102	E/14
1 hr.	EST	47	BW-29-ST	175	7⅛"	8.79	½" G-P Firestop, 1 Layer Over ¼" Sound Deadening Board, Both Sides Laminated, Staggered Studs	ABC	104	E/14
1 hr.	U. 312 (U.L. 30)	50	BW-35	175	5⅜"	8.7	⅝" G-P Firestop Type X, 1 Layer Strip Laminated over ¼" Gypsum Sound Deadening Board, 2 Sides, 1½" insulation	ABC	106	E/14
1 hr.	EST	50	BW-31-ST	225	10¼"	9.14	½" G-P Firestop, 1 Layer Laminated over ¼" Gypsum Sound Deadening Board, Both Sides double studs	ABC	108	E/14
1 hr.	EST	52	BW-30-ST	160	7⅛"	8.92	½" G-P Firestop, 1 Layer over ¼" Gypsum Sound Deadening Board, 2 Sides, 1½" insulation	ABC	–	–
1 hr.	EST	55	BW-32-ST	240	10¼"	9.29	½" G-P Firestop, 1 Layer Laminated over ¼" Gypsum Sound Deadening Board, 2 Sides, 1½" insulation, double studs	ABC	–	–

RATING	TEST* REFER.	STC	TEST REFER.	COST INDEX	PART. THICK-NESS	WEIGHT AND SQ. FT.	WALL SURFACE	BLDG. CODE APP	G-P SYST. #	DETAIL INFO PAGE
WOOD STUDS/Resilient Channels										
1 hr.	T-3127	44	OR-64-7	135	5⅜"	6.3	⅝" G-P Firestop, 1 Layer Nailed 1 Side, 1 Layer on Resilient furring other side	ABC	112	E/15
1½ hr.	EST	48	OR-64-15	155	6"	8.8	⅝" G-P Firestop, 2 Layer 1 Side, 1 Layer on Resilient furring other side	–	114	E/15
WOOD STUDS/Resilient Channels/Insulating Blankets										
1 hr.	T-3127	50	OR-64-16	150	5⅜"	6.4	⅝" G-P Firestop, 1 Layer Nailed 1 Side, 1 Layer on Resilient furring other side, plus fiberglass insulation in stud space	ABC	116	E/15
WOOD STUDS/Insulating Blankets										
1 hr.	BMS-92	39	EST	110	4⅝"	6.0	½" G-P Gypsum Wallboard, Both Sides with Mineral Wool in Stud Space	–	–	–
STAGGERED STUD WALLS										
1½ hr.	–	43	OR-00-0	175	7⅝"	11.0	½" G-P Regular, 2 layers, Both Sides	–	–	–
2 hrs.	U. L.	47	TL-69-210	190	8⅛"	12.7	⅝" G-P Firestop, 2 layers, Both Sides	–	–	–
1 hr.	Based on U. 501 (U.L. 5)	48	EST	140	6⅞"	7.0	⅝" Firestop. 1 layer each side, 2x6 plate, 1½" insulation	ABC	–	–
DOUBLE WOOD STUDS										
1 hr.	EST	50	EST	215	9¼"	7.5	⅝" Firestop, 1 layer each side double row of studs 1" apart on separate 2x4 plates, insulation in stud space	–	–	–
WOOD STUDS/Fiber Sound Board										
1 hr.	T-3006	46	OR-64-73	165	5⅞"	8.5	⅝" G-P Firestop, 1 layer over ½" Fiber Sound Deadening Board Both Sides	ABC	118	E/15
EXTERIOR WALLS										
1 hr.	T-99 BMS-191-192	–	–	–	5"	–	⅝" G-P Firestop, interior 1 layer ½" Gypsum Sheathing and Plywood or Wood Siding–Exterior	ABC	–	–
2 hrs.	U.L. 23	–	–	–	5⅜"	–	⅝" G-P Firestop, 2 layers interior, ½" Gypsum Sheathing, 2' x 8" T&G Brick Wall Exterior	ABC	–	–

*Many of these are new numbers assigned by Underwriters' Laboratories (old numbers are in parentheses).

COST INDEX BASIS: For wood and gypsum partitions, 100 is for 2x4 studs, 16" o.c., ½" Regular wallboard each side. For metal stud partitions, 100 is for 2½" studs, 24" o.c., ⅝" Firestop each side. Other assemblies are rated against those two. Allowances should be made for the fact each location may have differing labor and material cost conditions.

NOTE: This table is a summary only, based on tests at Underwriters' Lab., National Bureau of Standards, Univ. of Calif., Ohio State Univ., Geiger and Hammes, Riverbank Lab. and/or Ohio Research Corp. sponsored by the G-P Gypsum Division, Gypsum Association, or others. Fire rating, weight, and sound characteristics are based on a combination of specific details as tested and published. Where carpet and pad is used in sound tests, carpet is 44 oz. and pad 40 oz. weights.

SGP 0025496

RATING	TEST REFER.	STC	TEST REFER.	COST INDEX	PART. THICK-NESS	WEIGHT AND SQ. FT.	WALL SURFACE	BLDG. CODE APP	G-P SYST. #	DETAIL INFO PAGE
SEMI-SOLID GYPSUM PARTITIONS (Non-loadbearing 1" x 6"—2½" x 3"—¾" x 6")										
1 hr.	U.L. 10	35	BW-8-FT	75	2¼"	7.2	⅝" G-P Firestop, 1 layer each side, height limit 12 ft. based on L/120, 5 lbs. PSF	ABC	–	–
1 hr.	EST	51	OR-65-19	125	4¾"	7.2	⅝" G-P Firestop, 1 layer 1 side, other side screwed to resilient channels plus 2" fiberglass insul. in stud space	–	–	–
1 hr.	T-3128	51	OR-64-57	150	4¾"	7.9	⅝" G-P Firestop, 1 layer over ½" G-P S.D. board both sides	AB	–	–
SOLID GYPSUMBOARD PARTITIONS (Non-loadbearing)										
2 hrs.	EST	36	G.A.	100	2¼"	9.1	⅝" G-P Firestop, 1" Layer Each Side, 1" Coreboard	–	–	–
2 hrs.	G.A.	37	G.A.	95	2"	8.1	½" G-P Gypsumboard, 1 Layer Each Side, 1" Coreboard, height limit 9 ft. based on L/120, 5 lbs. PSF	–	–	–
2 hrs.	G A.	39	G.A.	90	2"	8.1	½" G-P Firestop, 1 Layer Each Side, 1" Coreboard, height limit 9 ft. based on L/120, 5 lbs. PSF	–	–	–
DOUBLE SOLID GYPSUMBOARD PARTITIONS (Non-loadbearing)										
1½ hr.	U.L	–	OR-64-39	–	6"	9.5	⅜" G-P Gypsumboard over ⅝" G-P Firestop Each Side, 1" Coreboard	ABC	–	–
3 hrs.	U.L. 5	–	TR-57-43	–	5"	13.4	⅝" G-P Firestop, 2 Layers Each Side, 1" Rib Coreboard	ABC	–	–
2 hrs.	U.L. 7	35	TR-57-42	–	4"	13.4	½" G-P Firestop, 2 Layers Each Side, 1" Rib Coreboard	ABC	–	–
2 hrs.	T-2575	47	OR-64-39	–	6"	13	½" G-P Gypsumboard over 1" Coreboard Each Side of 3" air space	ABC	200	E/16
TRIPLE SOLID GYPSUMBOARD PARTITIONS										
3 hrs.	EST	51	OR-64-58	–	6"	17	½" G-P Gypsumboard, 1 Layer over 1" Coreboard both side of 3" air space with 1" Coreboard	–	–	–
3 hrs.	EST	58	OR-64-59	–	6"	17.2	½" G-P Gypsumboard, 1 Layer over 1" Coreb'd. Each side of 3" air space with 1" Coreb'd centered in air space and fiberglass insulation in space on 1 side.	–	202	E/16
TRIPLE SOLID GYPSUMBOARD PARTITIONS (Non-loadbearing)										
2 hrs.	T-4958	–	–	–	2⅝"	10.5	G-P 1⅝" core unit plus two face layer ½" G-P regular screw-laminated, track and vertical "T" splines	–	–	–
2 hrs. Chase Wall	T-4991	–	–	–	7¾"	9.0	G-P 1⅝" core unit, angle runners, 2½" metal studs, one facing layer of ⅝" Firestop screwed to studs	–	–	–
1½ hr.	T-4982	–	–	–	2¼"	8.4	G-P 1⅝" core unit, plus face layer ⅝" Firestop screw-laminated. Track and vertical "T" splines on 24" centers	–	–	–

RATING	TEST REFER.	STC	TEST REFER.	COST INDEX	PART. THICK-NESS	WEIGHT AND SQ. FT.	WALL SURFACE	BLDG. CODE APP	G-P SYST. #	DETAIL INFO PAGE
METAL STUDS/INSULATING BLANKETS										
1 hr.	EST	41	OR-66-5	110	3½"	4.3	½" G-P Firestop, 1 layer each side, 2" fiber glass insul. in stud space, 2½" studs	–	–	–
1 hr.	–	44	OR-64-81	115	2⅞"	0.0	⅝" G-P Firestop, plus 1½" fiber glass insul. in stud space, 1⅝" studs	–	300	E/16
1 hr.	T-4848	48	OR-66-6	125	5⅛"	7.0	½" G-P Firestop, 1 layer 1 side, ½" regular G-P gypsumboard, 2 layers other side (insulation in cavity for STC), 3⅝" studs	–	316	E/18
1½ hr.	EST	48	OR-64-80	145	3⅜"	7.2	⅝" G-P Firestop, 1 layer 1 side, 2 layers other side 1½" fiber glass insul. in stud space, 1⅝" studs	–	–	–
1½ hr.	EST	48	OR-66-6	130	4"	6.3	½" G-P Firestop, 1 layer 1 side, 2 layers other side plus 2" fiber glass insul. in stud space, 2½" studs	–	–	–
2 hrs.	T-3218	48	BW-12-FT	155	4½"	8.0	½" G-P Firestop, 2 layers each side, STC based on 2" insul. in stud space, 2½" studs	–	310	E/17
1½ hr.	T-3126	50	OR-64-51	150	5½"	8.0	⅝" G-P Firestop, 1 layer 1 side, 2 layer other side plus 3" fiber glass insul. in stud space, 3⅝" studs	AB	318	E/18
2 hrs.	T-2557	52	OR-64-50	170	6⅛"	11.1	⅝" G-P Firestop, 2 layers both sides plus 1½" fiber glass in stud space, 3⅝" studs	–	324	E/18
METAL STUDS/GYPSUM SOUND DEADENING BOARD										
1 hr.	U410 (U.L. 32)	45	BW-16-FT	130	4"	7.0	½" G-P Firestop, 1 layer, laminated over ¼" S.D. board, both sides screw attached, 2½" studs	ABC	304	E/16
1 hr.	U410 (U.L. 32)	50	BW-17-FT	140	4"	7.12	½" G-P Firestop, both sides 1 layer, laminated to ¼" S.D. board, screw attached, 2" fiber glass friction fit in stud space, 2½" studs	ABC	306	E/17
1 hr.	U410 (U.L. 32)	54	BW-18-FT	145	4½"	8.12	⅝" G-P Firestop, both sides, 1 layer laminated to ¼" S.D. board screw attached, 2" fiber glass friction fit in stud space, 2½" studs	ABC	308	E/17
METAL STUDS/FIBERBOARD SOUND DEADENING BOARD										
1 hr.	EST	44	OR-65-10	125	5⅜"	5.75	⅝" G-P Firestop, 1 layer 1 side, other side, 1 layer over ½" fiber S.D. board, 3⅝" studs	–	320	E/16
1 hr.	EST	49	OR-65-11	135	5⅞"	–	⅝" G-P Firestop, 1 layer over ½" fiber S.D. board, both sides 3⅝" studs	–	–	–

FIRE HAZARD CLASSIFICATION: Official Underwriters' Tests ½" and ⅝" G-P Firestop, 10-15 (Labeled); ⅜", ½", and ⅝" G-P, 10-15 (Not Labeled). More complete listings and details are available.

Inconsistencies in test results are due to tests over a period of many years and variations in laboratory facilities.

1. STC under sound characteristics is Sound Transmission Class
2. Official Underwriters' Tests have proven joint finishing is not required for the rating in assemblies of Firestop.
3. Under "Model Building Code Approvals" (A) refers to International Conference of Building Officials; (B) refers to Southern Building Code Congress; (C) refers to Building Officials Conference of America. Additional approvals requested.

NOTE: All systems are ranked by S.T.C. number in each category.

SGP 0025498

RATING	TEST REFER.	STC	TEST REFER.	COST INDEX	PART. THICK-NESS	WEIGHT AND SQ. FT.	WALL SURFACE	BLDG. CODE APP	G-P SYST. #	DETAIL INFO PAGE
METAL STUD PARTITIONS										
35 min.	EST	35	OR-65-2	90	3½"	–	½" G-P Gypsumboard, 1 layer each side, 2½" studs	–	–	–
1 hr.	T-2316	35	TL-62-72	95	2⅞"	5.2	⅝" G-P Firestop, 1 layer each side, 1⅝" studs	ABC	302	E/16
1 hr.	T-2898	35	OR-64-65	130	3¾"	–	⅝" G-P Firestop, Eternawall, 1 layer each side, 2½" studs	AB	–	–
1 hr.	T-2069	39	OR-63-1	100	3¾"	–	⅝" G-P Firestop, 1 layer each side, 2½" studs	A	–	–
1 hr.	T-2016	42	OR-63-11	105	4⅝"	6.0	⅝" G-P Firestop, 1 layer each side, 3⅝" studs	ABC	–	–
1½ hr.	EST	43	OR-63-2	135	4⅜"	7.5	⅝" G-P Firestop, 1 layer 1 side, 2 layers other side, 2½" studs	–	–	–
1½ hr.	EST	43	OR-64-32	140	5½"	8.0	⅝" G-P Firestop, 1 layer 1 side, 2 layers other side, 3⅝" studs	–	312	E/17
2 hr.	T-2557	46	EST	150	5"	10.4	⅝" G-P Firestop, 2 layers, 2 sides, 2½" studs	AB	314	E/17
2 hr.	T-2557	47	OR-64-52	–	6⅛"	11.0	⅝" G-P Firestop, 2 layers, 2 sides, 3⅝" studs	–	322	E/18
2 hr.	T-2406	47	EST	–	6⅛"	10.4	⅝" G-P Firestop, 2 layers, 2 sides (face layer–Eternawall), 3⅝" studs	ABC	–	–
STEEL STUD CHASE WALL (1⅝" Metal Studs 24" o.c.—6" x 12"—½" Gypsumboard Spacers)										
1 hr.	EST	47	BW-335T	–	7½"	6.69	½" G-P Firestop, 1 layer laminated over ¼" S.D. board, both sides	A	326	E/18
1 hr.	EST	52	BW-345T	–	7½"	6.84	½" G-P Firestop, 1 layer laminated over ¼" S.D. board both sides, plus 1½" insul. in stud space	A	326	E/18
STEEL COLUMN FIREPROOFING										
1 hr.	G.A.	–	–	–	–	–	½" G-P Gypsumboard, 2 layers	–	–	–
1 hr.	EST	–	–	–	–	–	⅝" G-P Firestop, 1 layer	AB	–	–
1½ hr.	G.A.	–	–	–	–	–	½" G-P Gypsumboard, 3 layers	–	–	–
2 hr.	X520 (U.L. 20)	–	–	–	–	–	½" G-P Firestop, 1 layer	–	–	–
2 hr.	X517 (U.L. 8)	–	–	–	–	–	⅝" G-P Firestop, 2 layers	ABC	–	–
3 hr.	X513 (U.L. 39)	–	–	–	–	–	½" G-P Firestop, 2 layers	–	–	–
3 hr.	X509 (U.L. 18)	–	–	–	–	–	⅝" G-P Firestop, 3 layers	ABC	–	–
4 hr.	X501 (U.L. 26)	–	–	–	–	–	⅝" G-P Firestop, 4 layers	AB	–	–

SOUND CONTROL & FIRE RESISTANCE Technical Data

	WEIGHT LB./SQ. FT.	SOUND RATING RATING	SOUND RATING TEST REF.	FIRE RESISTANCE RATING	FIRE RESISTANCE TEST REF.*	MODEL BUILDING CODE
WOOD JOISTS 16" o.c. finished floor on rough sub-floor, except as noted.						
⅜" G-P Regular, 1 layer	—	—	—	15 min.	—	A B C
½" G-P Regular, 1 layer	11.4	—	—	25 min.	—	A B C
½" G-P Firestop, 1 layer	11.4	—	—	45 min.	U.L. No. 1	A B
⅝" G-P Firestop, 1 layer	12.0	STC, 38, INR—16 (Est.)		1 hr.	L501 (U.L. No. 1)	A B
⅝" G-P Firestop, 1 layer nailed; 2nd layer ⅝" Firestop applied to resilient furring channel 24" o.c. between layers	16.0	—	—	2 hr.	L505 (U.L. No. 217)	A B C
½" G-P Firestop, 1 layer nailed	13.0	—	—	1 hr.	L503 (U.L. No. 46)	A B C
½" G-P Firestop applied to resilient metal furring 24" o.c.	13.0	STC 47	TL64-155	1 hr.	L502 (U.L. No. 33)	A B C
⅜" G-P Regular, 2 layers	—	—	—	30 min.	Est.	——
½" G-P Regular, 2 layers	—	—	—	1 hr.	Est.	——
½" G-P Firestop, 1 layer, laminated and nailed to ¼" G-P Gypsum Sound Deadening Board, with floor of ⅝" CD plywood, ½" particleboard underlayment, carpet and pad	—	STC 41/ INR + 25	BW-2MT	1 hr.	Est.	A——
⅝" G-P Firestop, 1 layer laminated and nailed to ¼" G-P Gypsum Sound Deadening Board with floor of ⅝" CD plywood, ½" particleboard underlayment, carpet and pad	—	STC 42/ INR + 25	(Est.)	1 hr.	Est.	A B C
⅝" G-P Firestop, 3" insulation, resilient furring, carpet and pad	—	STC 48/ INR + 18	L-224-3 & 4	1 hr.	Est.	A B C
PREFABRICATED FLOOR PANELS spaced 12" o.c.—Combustible						
½" G-P Firestop. one layer over ½" sound deadening board (direct attached)	6.5	—	—	1 hr.	U.L. No. 47	A——
2" CONCRETE FLOOR ON METAL LATH over Steel Bar Joists 24" o.c.—Incombustible						
⅝" G-P Firestop nailed or screwed to metal furring 16" o.c.	34.2	—	—	1 hr.	U.L. No. 2	A B C
⅝" G-P Firestop Backer, nailed or screwed to metal furring 16" o.c.	34.2	—	—	1 hr.	U.L. No. 2	A B C
⅝" G-P Firestop, 1 layer, metal furring 24" o.c.	32.0	—	—	1 hr.	G501 (U.L. No. 19)	A B C
½" G-P Firestop, metal furring 24" o.c.	33.9	—	—	1½ hr.	G502 (U.L. No. 17)	A B C
⅝" G-P Firestop, metal furring 24" o.c.	36.4	—	—	2 hr.	G505 (U.L. No. 259)	A——
⅝" G-P Firestop metal deck	—	—	—	2 hr.	U.L. File R4024-12	——
⅝" G-P Firestop, nailed, 1⅝" lightweight concrete, ⅝" plywood, wood joists 16" o.c. insulation, resilient furring, carpet and pad	—	STC 53/ INR + 23	L-224-27 & 28	1 hr.	Est.	A——
⅝" G-P Firestop, nailed, 1⅝" lightweight concrete, ⅝" plywood, wood joists 16" o.c., insulation, carpet and pad	—	STC 47/ INR + 15	L-224-29 & 30	1 hr.	Est.	A——
2½" CONCRETE FLOOR ON METAL LATH over Steel Bar Joists, 24" o.c.—Incombustible						
½" G-P Firestop, metal furring 24" o.c.	38.5	—	—	2 hr.	G504 (U.L. No. 237)	A B C
⅝" G-P Firestop, metal furring 24" o.c.	39.3	—	—	2 hr.	U.L. No. 69	A B C
STEEL-WOOD COMBINATION JOISTS						
⅝" G-P Firestop, 18" deep combination steel-wood joists 32" o.c., 3" insulation, resilient furring, carpet and pad, 1⅛" plywood sub-floor	—	STC 47/ INR + 18	L-224-35 & 36	1 hr.	Est.	——
⅝" G-P Firestop, 18" deep combination steel-wood joists 16" o.c., 3" insulation, ⅝" plywood, lightweight concrete deck, carpet and pad	—	STC 46/ INR + 11	L-224-37 & 38	1 hr.	Est.	——
BEAM PROTECTION						
⅝" G-P Firestop, two layers	—	—	—	2 hr.	N501, N502 (UL. No. 254, 255)	——

*Many of these are new numbers assigned by Underwriters' Laboratories. (Old numbers are in parenthesis)

SOUND CHARACTERISTICS—References: Geiger and Hamme, Inc.; Riverbank Labs; Koderas.
(A) UNDER MODEL BUILDING CODE APPROVALS.

A—Refers to international Conference of Building Officials.
B—Refers to Southern Building Code Congress.
C—Refers to Building Officials Conference of America.
Additional Approvals Requested.

FIRE HAZARD CLASSIFICATION: Official Underwriters' Tests. ½" and ⅝" G-P Firestop, 10-15 (Labeled); ⅜", ½", and ⅝" G-P, 10-15 (Not Labeled).
More complete listings and details are available.
Inconsistencies in test results are due to tests over a period of many years and variations in laboratory facilities.

SGP 0025500

1. STC under sound characteristics is Sound Transmission Class.
2. Official Underwriters' Tests have proven joint finishing is not required for the rating in assemblies of Firestop.
3. Under "Model Building Code Approvals" (A) refers to International Conference of Building Officials; (B) refers to Southern Building Code Congress; (C) refers to Building Officials Conference of America. Additional approvals requested.

NOTE 1. This table is a summary only, based on tests at Underwriters' Laboratories, National Bureau of Standards, University of California, Ohio State University, sponsored by the Georgia-Pacific Gypsum Division, Gypsum Association, or others. The fire rating, weights and sound characteristics are based on a combination of specific details as tested and published.

NOTE 2. Combustible Assemblies—For all 45 minute and 1 hour ratings ⅝" structural interior plywood underlayment grade, over building paper, over ½" structural interior plywood with exterior glue C-D grade may be used over the wood joists with ceilings as detailed.

NOTE 3. Incombustible Assemblies—Ceilings for all 1 hour, 1½ hour and 2 hour incombustible floor and ceiling construction assemblies with 2" or 2½" concrete floor on metal lath over steel bar joints, unless otherwise specified, may be directly attached or suspended.

G-P Firestop is listed by Underwriters and carries the UL Label for 45 minutes, 1, 2 and 3 hour Fire Resistance in various designs and with a Fire Hazard Classification of 10-15.

SPECIFICATION DIRECTORY GYPSUM BOARD PRODUCTS

PRODUCT	THICKNESS	WIDTH	LENGTH	ASTM STANDARDS	FEDERAL SPECIFICATION	APPLIED UNDER
G-P REGULAR WALLBOARD Tapered Edge	¼"	4'	6' to 12'	C 36-68	SS-L-30c Type III–Grade R 3/20/67	ANSI A97.1
Square, Tapered or Round Edge	⅜"	4'	6' to 16'	C 36-68	SS-L-30c Type III–Grade R 3/20/67	ANSI A97.1
Square, Tapered or Round Edge	½"	4'	6' to 16'	C 36-68	SS-L-30c Type III–Grade R 3/20/67	ANSI A97.1
Square, Tapered or Round Edge	⅝"	4'	6' to 16'	C 36-68	SS-L-30c Type III–Grade R 3/20/67	ANSI A97.1
G-P INSULATING WALLBOARD Square, Tapered Edge or Round Edge	⅜"	4'	6' to 16'	C 36-68	SS-L-30c Type III–Grade R 3/20/67	ANSI A97.1
Square, Tapered Edge or Round Edge	½"	4'	6' to 16'	C 36-68	SS-L-30c Type III–Grade R 3/20/67	ANSI A97.1
Square, Tapered Edge or Round Edge	⅝"	4'	6' to 16'	C 36-68	SS-L-30c Type III–Grade R 3/20/67	ANSI A97.1
G-P ETERNAWALL™ Modified Beveled Edge	½"	4'	8'†	C 36-68	SS-L-30c Type III–Grade R or Grade X Class III 3/20/67	ANSI A97.1
Modified Beveled Edge	⅝"	4'	8'†	C 36-68	SS-L-30c Type III–Grade R or Grade X Class III 3/20/67	ANSI A97.1
G-P FIRESTOP® WALLBOARD Square, Tapered Edge or Round Edge	½"	4'	6' to 16'	C 36-68	SS-L-30c Type III–Grade X 3/20/67	ANSI A97.1
Square, Tapered Edge or Round Edge	⅝"	4'	6' to 16'	C 36-68	SS-L-30c Type III–Grade X 3/20/67	ANSI A97.1
G-P FIRESTOP® INSULATING WALLBOARD Square, Tapered Edge or Round Edge	½"	4'	6' to 16'	C 36-68	SS-L-30c Type III–Grade X 3/20/67	ANSI A97 1
Square, Tapered Edge or Round Edge	⅝"	4'	6' to 16'	C 36-68	SS-L-30c Type III–Grade X 3/20/67	ANSI A97 1
G-P TILE BACKER BOARD Tapered Edge	½"	4'	8', 11' and 12'	C630-70	–	–
Tapered Edge	⅝"	4'	8', 11' and 12'	C630-70	–	–
G-P GYPSUM SOUND DEADENING BOARD Square Edge	¼"	4'	8'	C442-67	SS-L-30c Type IV–Grade R	–
G-P BACKER BOARD Square or T & G Edge	⅜"	4'	8' Std.†	C 442-67	SS-L-30c Type IV Grade R Grade X	–
Square or T & G Edge	½"	2'	8' Std.†	C 442-67	SS-L-30c Type IV Grade R Grade X	–
Square or T & G Edge	⅝"	2'	8' Std.†	C 442-67	SS-L-30c Type IV Grade R Grade X	–
G-P FIRESTOP® GYPSUM SHEATHING Long edges - Square Edge — Core-treated or non core-treated	½"	4'	8' & 9'	C 79-67	SS-L-30c Type II Grade R&W	–
Tongue and Groove — Core-treated or non core-treated	½"	2'	8' Std.†	C 79-67	SS-L-30c Type II Grade R&W	–

†Standard Length—Other Lengths on Order.

BRAND	PRODUCT	ASTM STANDARDS	FEDERAL SPEC.	APPLIED UNDER
G-P	**JOINT SYSTEM MATERIALS**	C 475-64	SS-J-570a 10/24/66	ANSI A97.1
G-P	**METRO-MIX™**	C 317-64	——	ANSI A59.1
G-P	**FORM BOARD**	C 318-67	Type V SS-L-30c Grade R	ANSI A59.1

Any questions not answered by the information on this sheet or available from local sources should be referred to the General Sales Office. Be sure to give all information as to issuing office, date of specification, job description, location, enforcing party, product involved, description of use if other than normal, amount involved, etc. This is particularly important when special limitations under standard specifications are involved.

Gypsum Division field locations have a book of applicable Federal and ASTM Specifications. Each Specification is preceded with a detailed analysis prepared by the Laboratory of which G-P products meet the specification and any limitations. The Local Sales Office is authorized to write a letter of certification in accordance with the Laboratory analysis.

SYSTEM INSTALLATION DETAILS

½" G-P FIRESTOP® LAMINATED TO ¼" GYPSUM SOUND DEADENING BOARD #100

STC/45 G&H BW 27FT
FIRE RATING/1 HR. COMBUSTIBLE/FIRE TEST U.L. U312 (U.L. 30)

Materials Used

1. 2" x 4" Wood Studs
2. 2" x 4" Wood Plates
3. ¼" Gypsum Sound Deadening Board
4. ½" Firestop Type XXX Wallboard or Firestop Eternawall™
5. 5d cc Nails
6. 4d Finish
7. G-P Joint Compound

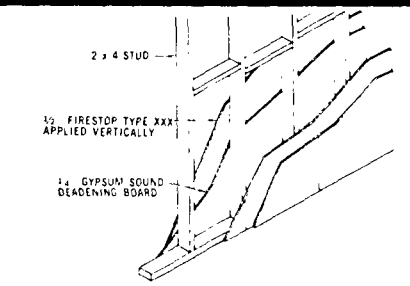

⅝" G-P FIRESTOP® LAMINATED TO ¼" GYPSUM SOUND DEADENING BOARD #102

STC/47 G&H BW 28FT
FIRE RATING/1HR. COMBUSTIBLE/FIRE TEST U.L. U312 (U.L. 30)

Materials Used

1. 2" x 4" Wood Studs
2. 2" x 4" Wood Plates
3. ¼" Gypsum Sound Deadening Board
4. ⅝" Firestop Type X Wallboard or Firestop Eternawall™
5. Joint Compound
6. 4d Finishing Nails
7. 5d Nails

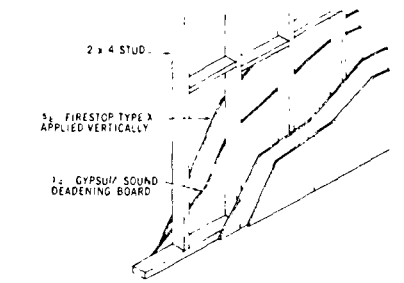

½" G-P FIRESTOP® LAMINATED TO ¼" GYPSUM SOUND DEADENING BOARD #104

STC/47 G&H BW 29ST
STC/52 WITH INSULATION G&H BW 30ST
FIRE RATING/1 HR. COMBUSTIBLE/EST.

Materials Used

1. 2" x 4" Wood Studs (staggered)
2. 2" x 6" Plate
3. ¼" G-P Gypsum Sound Deadening Board
4. ½" G-P Firestop Type XXX or Firestop Eternawall™
5. G-P Joint Compound
6. 4d Finishing Nails and 4d Common Nails
7. 5d Common Nails
8. 1½" Fiberglass Batts (on BW-30ST for STC/52)

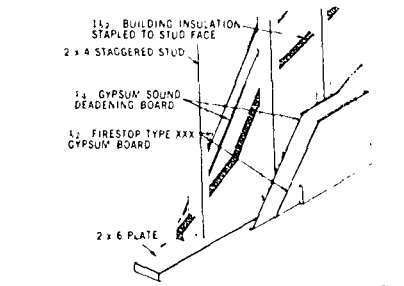

⅝" G-P FIRESTOP® TYPE X, 1 LAYER LAMINATED TO ¼" S.D.B., 2 SIDES WITH 1½" INSULATION #106

STC/50 G&H BW 35FT
FIRE RATING/1 HR. COMBUSTIBLE/FIRE TEST U.L. U312 (U.L. 30)

Materials Used

1. 2" x 4" Wood Studs
2. 2" x 4" Wood Plates
3. ¼" Gypsum Sound Deadening Board
4. ⅝" Firestop Type X Wallboard or Firestop Eternawall™
5. Joint Compound
6. 4d Finishing Nails
7. 5d Nails
8. 1½" Fiberglass Batts.

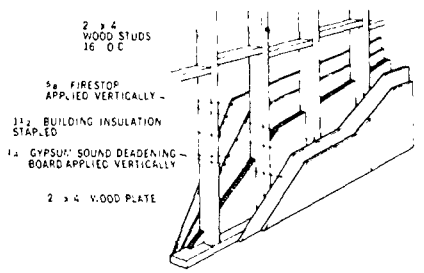

½" G-P FIRESTOP® LAMINATED TO ¼" GYPSUM SOUND DEADENING BOARD #108

STC/50 G&H BW 31ST
STC/55 WITH INSULATION G&H BW 32ST
FIRE RATING/1 HR. COMBUSTIBLE/EST.

Materials Used

1. 2" x 4" Wood Studs (double row)
2. 2" x 4" Wood Plates—1" apart
3. ¼" G-P Gypsum Sound Deadening Board
4. ½" G-P Firestop Type XXX or Firestop Eternawall™
5. 4d Finishing Nails, 4d Nails
6. 5d Nails
7. G-P Joint Compound
8. 1½" Fiberglass Batts (on BW 32ST with insulation for STC/55)

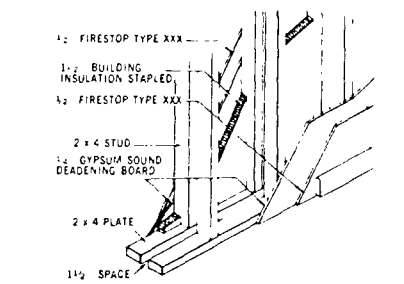

5/8" G-P FIRESTOP®, 2 LAYER 2 SIDES — #110

STC/41 SOUND TEST OR 64-12
FIRE RATING/2 HR. COMBUSTIBLE/FIRE TEST T-194

Materials Used

1. 2" x 4" Wood Studs
2. 2" x 4" Wood Plates
3. 5/8" Firestop Type X Gypsum Wallboard
4. 1¼" Type W Drywall Screws
5. Joint or Laminating Compound

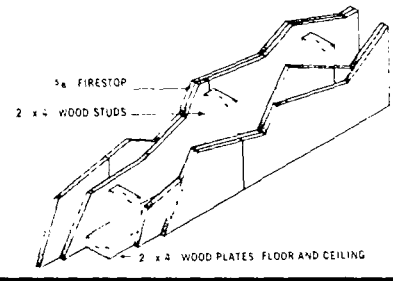

5/8" G-P FIRESTOP® ON RESILIENT CHANNEL — #112

STC/44 SOUND TEST OR 64-7
FIRE RATING/1 HR. COMBUSTIBLE/FIRE TEST T-3127

Materials Used

1. 2" x 4" Wood Studs
2. 2" x 4" Wood Plates
3. 5/8" Firestop Type X Gypsum Wallboard
4. Donn DG-8 Resilient Channels
5. 1¼" Type W Drywall Screws
6. 1" Type S Drywall Screws

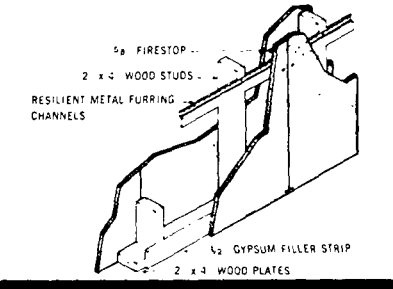

5/8" G-P FIRESTOP® 2 LAYERS 1 SIDE/1 LAYER ON RESILIENT CHANNEL OTHER SIDE — #114

STC/48 SOUND TEST OR 64-15
FIRE RATING/1½ HR. COMBUSTIBLE/EST.

Materials Used

1. 2" x 4" Wood Studs
2. 2" x 4" Wood Plates
3. 5/8" Firestop Type X Gypsum Wallboard
4. Donn DG-8 Resilient Channels
5. 1¼" Type W Drywall Screws
6. 1" Type S Drywall Screws

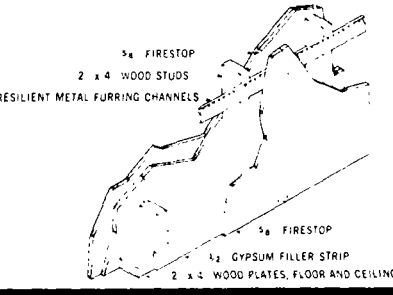

5/8" G-P FIRESTOP® ON RESILIENT CHANNEL WITH INSULATION IN CAVITY — #116

STC/50 SOUND TEST OR 64-16
FIRE RATING/1 HR. COMBUSTIBLE/FIRE TEST T-3127

Materials Used

1. 2" x 4" Wood Studs
2. 2" x 4" Wood Plates
3. 5/8" Firestop Type X Gypsum Wallboard
4. 1½" Fiberglass Insulation
5. Donn DG-8 Resilient Channels
6. 1¼" Type W Drywall Screws
7. 1" Type S Drywall Screws

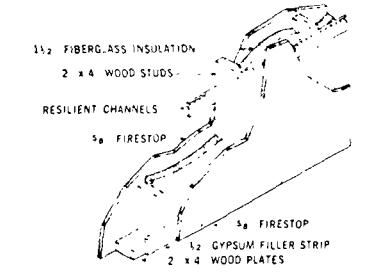

5/8" G-P FIRESTOP® OVER FIBER SOUND DEADENING BOARD 2 SIDES — #118

STC/46 SOUND TEST OR 64-73
FIRE RATING/1 HR. COMBUSTIBLE/FIRE TEST T-3006

Materials Used

1. 2" x 4" Wood Studs
2. 2" x 4" Wood Plates
3. 2" x 4" Wood Fire Blocks
4. ½" Fiber Sound Deadening Board
5. 5/8" Firestop Type X Gypsum Wallboard
6. 5d Cement Coated Nails and 8d Box Nails
7. Laminating or Joint Compound

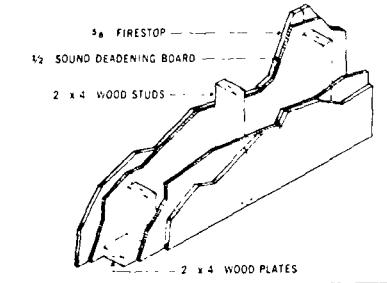

½" G-P GYPSUM WALLBOARD OVER COREBOARD — #200

STC/47 SOUND TEST OR 64-39
FIRE RATING/2 HR. COMBUSTIBLE/FIRE TEST T-2575

Materials Used
1. 3" x 1⅝" Wood Perimeter Framing
2. 1" Tongue & Groove Coreboard
3. ½" Gypsum Wallboard
4. Laminating Compound
5. 8d Nails

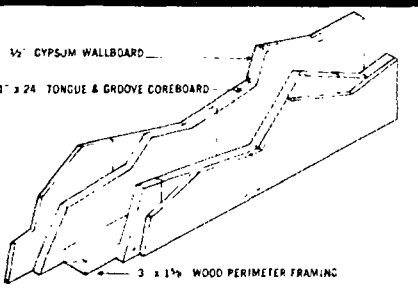

½" G-P GYPSUM WALLBOARD OVER COREBOARD WITH INSULATION IN CAVITY — #202

STC/57 SOUND TEST OR 64-59
FIRE RATING/3 HR. COMBUSTIBLE/EST.

Materials Used
1. 1" x 1⅝" Wood Strips
2. 1" x 24" Tongue & Groove Coreboard
3. ½" Gypsum Wallboard
4. 1½" Fiberglass Insulation
5. Laminating or Joint Compound
6. 5d and 8d Nails

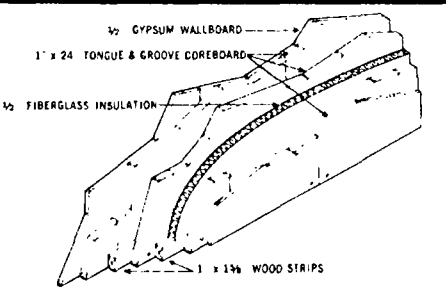

⅝" G-P FIRESTOP® 1 LAYER EACH SIDE — #300

STC/35
FIRE RATING/1 HR. NON-COMBUSTIBLE/FIRE TEST T-2316

Materials Used
1. 1⅝" Steel Studs, 24" o.c.
2. 1⅝" Floor and Ceiling Track
3. ⅝" Firestop Type X Gypsum Wallboard
4. 1" Type "S" Drywall Screws

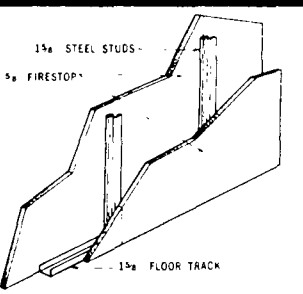

⅝" G-P FIRESTOP® EACH SIDE WITH INSULATION IN CAVITY — #302

STC/44
SOUND TEST OR 64-81
FIRE RATING/1 HR. NON-COMBUSTIBLE/FIRE TEST T-2316

Materials Used
1. 1⅝" Steel Studs, 24" o.c.
2. 1⅝" Floor and Ceiling Track
3. ⅝" Firestop Type X Gypsum Wallboard
4. 1½" Fiberglass Insulation
5. 1" Type "S" Drywall Screws

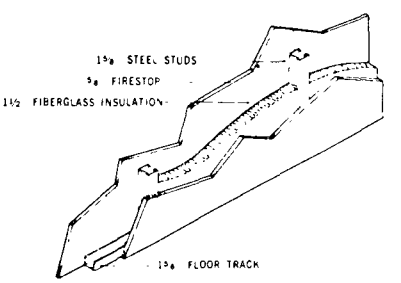

½" G-P FIRESTOP® OVER ¼" GYPSUM SOUND DEADENING BOARD — #304

STC/45 SOUND TEST BW 16FT
FIRE RATING/1 HR. NON-COMBUSTIBLE
FIRE TEST T-3854 & U410 (U.L. 32)

Materials Used
1. 2½" Steel Studs, 24" o.c.
2. 2½" Steel Channel
3. ¼" Gypsum Sound Deadening Board
4. 1" Type "S" Drywall Screws
5. ½" Firestop™ Type XXX Wallboard or Firestop Eternawall™
6. 1⅜" Type "S" Drywall Screws

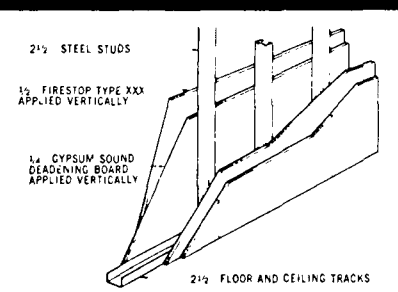

SGP 0025504

½" G-P FIRESTOP® OVER ¼" GYPSUM SOUND DEADENING BOARD WITH INSULATION IN CAVITY #306

STC/50 SOUND TEST BW 17FT
FIRE RATING/1 HR. NON-COMBUSTIBLE/FIRE TEST T-3854

Materials Used

1. 2½" G-P Steel Studs, 24" o.c.
2. 2½" G-P Steel Channels
3. 2" Friction Fit Fiberglass Insulation
4. ¼" G-P Gypsum Sound Deadening Board
5. 1" G-P Type "S" Drywall Screws
6. ½" G-P Firestop™ Type XXX Wallboard or Firestop Eternawall™
7. 1⅜" G-P Type "S" Drywall Screws

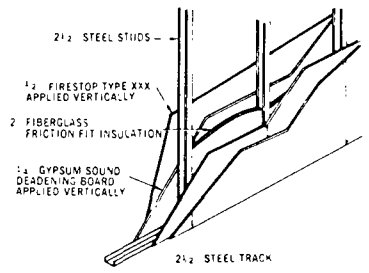

⅝" G-P FIRESTOP® OVER ¼" GYPSUM SOUND DEADENING BOARD WITH INSULATION IN CAVITY #308

STC/54 SOUND TEST BW 18FT
FIRE RATING/1 HR. NON-COMBUSTIBLE/FIRE TEST T-3854

Materials Used

1. 2½" G-P Steel Studs, 24" o.c.
2. 2½" G-P Steel Channels
3. 2" Friction Fit Fiberglass Insulation
4. ¼" G-P Gypsum Sound Deadening Board
5. 1" G-P Type "S" Drywall Screws
6. ⅝" G-P Firestop® Type "X" Wallboard or Firestop® Eternawall
7. 1⅜" G-P Type "S" Drywall Screws

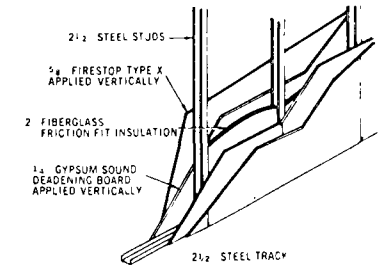

½" G-P FIRESTOP®, 2 LAYERS 2 SIDES WITH INSULATION IN CAVITY #310

STC/48 SOUND TEST BW 12FT
FIRE RATING/2 HR. NON-COMBUSTIBLE/FIRE TEST T-3218
(Fiberglass insulation not required for fire rating)

Materials Used

1. 2½" Steel Studs, 24" o.c.
2. 2½" Floor and Ceiling Tracks
3. ½" Firestop® Type XXX Gypsum Wallboard
4. 2" Fiberglass Insulation
5. Laminating or Joint Compound
6. 1" and 1⅜" Type S Drywall Screws

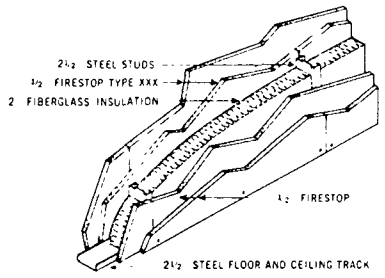

⅝" G-P FIRESTOP®, 1 LAYER 1 SIDE, 2 LAYERS OTHER SIDE #312

STC/43 SOUND TEST OR 63-2
FIRE RATING/1½ HR. NON-COMBUSTIBLE/EST.

Materials Used

1. 2½" Steel Studs, 24" o.c.
2. 2½" Floor and Ceiling Track
3. ⅝" Firestop® Type X Gypsum Wallboard
4. 1" and 1⅝" Type S Drywall Screws

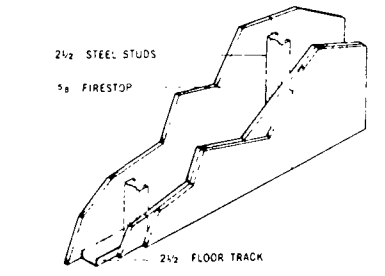

⅝" G-P FIRESTOP®, 2 LAYERS 2 SIDES #314

STC/46
FIRE RATING/2 HR. NON-COMBUSTIBLE/EST./FIRE TEST T-2557

Materials Used

1. 2½" Steel Studs, 24" o.c.
2. 2½" Floor & Ceiling Track
3. ⅝" Firestop®, 2 layers each side
4. 1" & 1⅝" Type S Screws

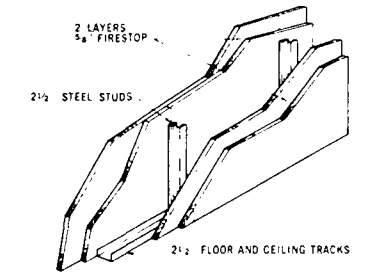

½" G-P FIRESTOP®, 1 LAYER 1 SIDE. ½" G-P REGULAR, 2 LAYERS OTHER SIDE — #316

STC/48 (EST)
FIRE RATING/1 HR. NON-COMBUSTIBLE/FIRE TEST T-4848

Materials Used

1. 3⅝" Steel Studs, 24" o.c.
2. 3⅝" Track
3. ½" Firestop® Type XXX Gypsum Wallboard
4. ½" Regular Gypsum Wallboard
5. 1½" Fiberglass Insulation (not required for fire rating)
6. 1" & 1⅝" Type S Screws

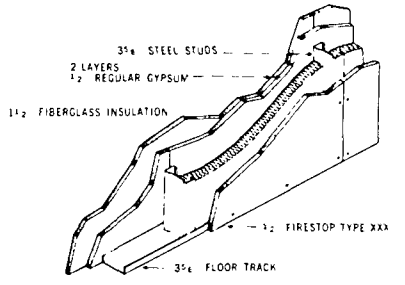

⅝" G-P FIRESTOP®, 2 LAYERS 1 SIDE, 1 LAYER OTHER SIDE WITH INSULATION IN CAVITY — #318

STC/50 SOUND TEST OR 64-51
FIRE RATING/1½ HR. NON-COMBUSTIBLE/FIRE TEST T-3126

Materials Used

1. 3⅝" Steel Studs, 24" o.c.
2. 3⅝" Floor and Ceiling Track
3. ⅝" Firestop® Type X Gypsum Wallboard
4. 3" Fiberglass Insulation
5. Laminating Compound
6. 1" and 1⅞" Type S Drywall Screws

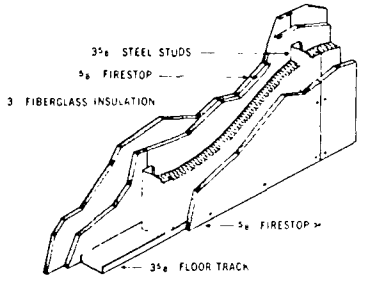

⅝" G-P FIRESTOP®, 1 LAYER 1 SIDE, 1 LAYER OVER ½" FIBER S.D. BOARD OTHER SIDE — #320

STC/44 SOUND TEST OR 65-10
FIRE RATING/2 HR. COMBUSTIBLE/FIRE TEST T-2557

Materials Used

1. 3⅝" Steel Studs, 24" o.c.
2. 3⅝" Floor and Ceiling Track
3. ½" Fiber Sound Deadening Board
4. Laminating Compound
5. ⅝" Firestop® Type X Gypsum Wallboard
6. 1" and 1⅝" Type S Drywall Screws

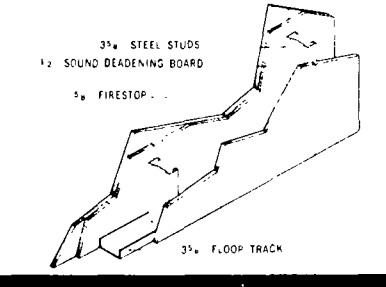

⅝" G-P FIRESTOP®, 2 LAYERS 2 SIDES — #322

STC/47 SOUND TEST OR 64-52
FIRE RATING/2 HR. COMBUSTIBLE/FIRE TEST T-2557

Materials Used

1. 3⅝" Steel Studs, 24" o.c.
2. 3⅝" Floor and Ceiling Track
3. Laminating Compound
4. ⅝" Firestop® Type X Gypsum Wallboard
5. 1" and 1⅝" Type S Drywall Screws

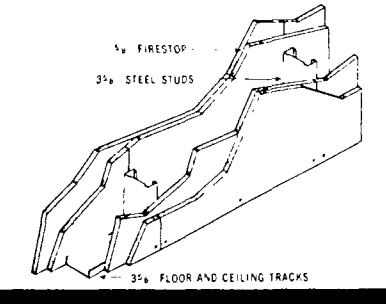

⅝" G-P FIRESTOP®, 2 LAYERS 2 SIDES WITH INSULATION IN CAVITY — #324

STC/52 SOUND TEST OR 64-50
FIRE RATING/2 HR. NON-COMBUSTIBLE/TEST T-2557

Materials Used

1. 3⅝" Steel Studs, 24" o.c.
2. 3⅝" Floor and Ceiling Track
3. ⅝" Firestop® Type X Gypsum Wallboard
4. 1½" Fiberglass Insulation
5. Laminating or Joint Compound
6. 1" and 1⅝" Type S Drywall Screws

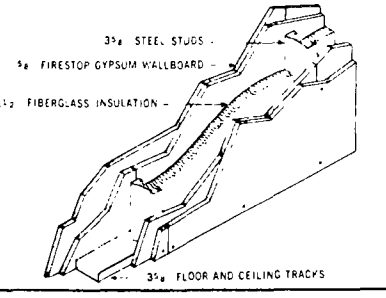

SGP 0025506

½" G-P FIRESTOP®, OVER ¼" GYPSUM SOUND DEADENING BOARD #326

STC/47 & 52 SOUND TESTS: BW 33ST, BW 34ST (WITH INS.)
FIRE RATING/1 HR. NON-COMBUSTIBLE

Materials Used

1. 1⅝" Steel Studs, 24" o.c.
2. 1⅝" Track
3. ¼" G-P ¼" Gypsum Sound Deadening Board
4. ½" Firestop® Type XXX Wallboard or Firestop® Eternawall
5. 1¾" Type "S" Drywall Screws
6. 1¼" Type "S" Drywall Screws
7. ½" x 6" x 12" Gypsum Board Spacers
8. 1½" Fiberglass Batts (on BW-34ST for 52 STC)

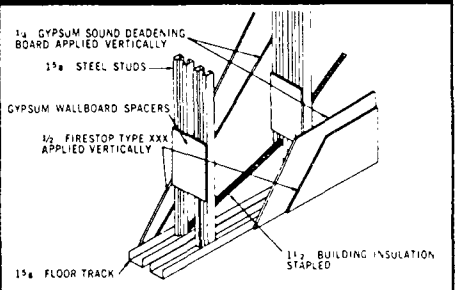

½" G-P FIRESTOP® OVER ¼" GYPSUM SOUND DEADENING BOARD #400

STC/41 SOUND TEST G&H BW 2-MT
INR + 25 (WITH CARPET & PAD)
FIRE RATING/1 HR. COMBUSTIBLE/EST. BASED ON L 503 (U.L. 46)

Materials Used

1. 2" x 10" Wood Joists
2. Carpet and Pad
3. ½" Particleboard Underlayment
4. ⅝" CD Grade Plywood Subfloor
5. ¼" G-P Gypsum Sound Deadening Board
6. ½" G-P Firestop® Type XXX Wallboard
7. 4d Ring Shank Nails; 6d Common Nails; 8d Common Nails

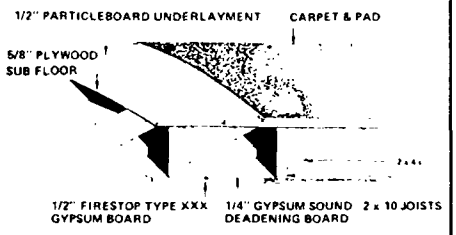

½" G-P FIRESTOP® ON RESILIENT METAL FURRING (FLOOR/CEILING) #402

STC/47 SOUND TEST TL 64-155
FIRE RATING/1 HR. COMBUSTIBLE/FIRE TEST L502 (U.L. 33)

Materials Used

1. 2" x 10" Wood Joists
2. Rosin Building Paper
3. 1" x 6" Tongue and Groove Subflooring
4. 1" x 4" Tongue and Groove Finished Flooring
5. Donn DG-8 Resilient Channels
6. ½" Firestop® Type XXX Gypsum Wallboard
7. 1" Type "S" Drywall Screws and 8d Nails

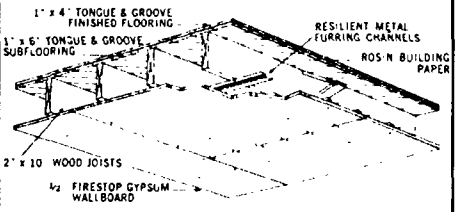

⅝" G-P FIRESTOP® ON RESILIENT METAL FURRING (FLOOR/CEILING) #404

STC/48 SOUND TEST L-224-4-65
FIRE RATING/1 HR. COMBUSTIBLE/EST.

Materials Used

1. 2" x 8" Wood Joists—16" o.c.
2. ⅝" Plywood
3. 44 oz. Wool Carpet
4. 40 oz. All Hair Pad
5. 3" Insulation
6. Resilient Channels
7. ⅝" G-P Firestop® Type X Wallboard
8. 8d Nails
9. 1" and 1¼" Drywall Screws

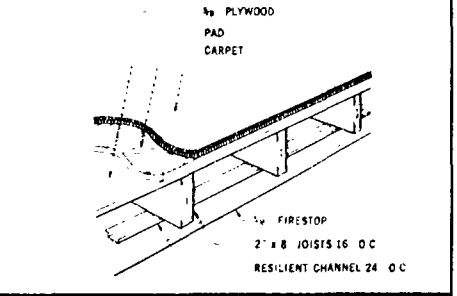

⅝" G-P FIRESTOP® INSULATION WITH CEILING INDEPENDENT OF FLOOR #406

INR + 29, STC/51 SOUND TESTS: KAL-224-14-64, KAL-224-1565
FIRE RATING/1 HR. COMBUSTIBLE/EST.

Materials Used

1. 2" x 8" Wood Joists
2. ½" Plywood
3. 44 oz. Wool Carpet
4. 40 oz. All Hair Pad
5. 8d Nails
6. 2" x 4" Joists
7. 3" Insulation
8. ⅝" G-P Firestop® Type X Wallboard

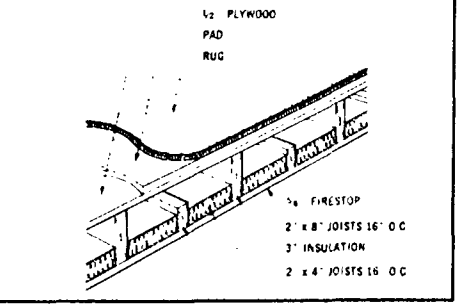

Water Resistant Wallboard

G-P Tile Backer Board is a water-resistant gypsum product with a light blue face paper, designed for use as a base for the adhesive application of ceramic, metal or plastic tile. The gypsum core consists of incombustible gypsum rock, combined with an emulsion giving high water resistance. This new G-P product is ideal for bathrooms, kitchens, powder rooms and all high moisture areas.

For fire rated partitions between bathrooms or interior areas subject to moisture use 5/8" Firestop Tile Backer proven by Underwriters' Laboratories in a 1-hour assembly over wood studs.

The raw edges of Tile Backer Board (end joints, cut edges, cut-outs) are to be caulked with an approved waterproof non-hardening caulking compound. As an alternate to caulking, G-P can provide a special 2½" wide self-adhering vinyl tape to place over edges and cut-outs.

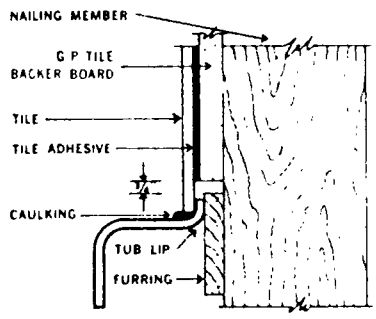

TUB

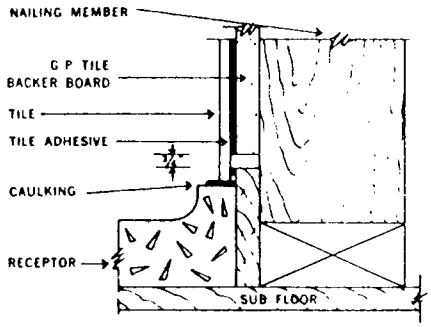

SHOWER RECEPTOR

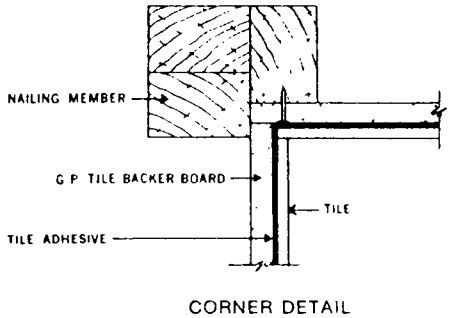

CORNER DETAIL

*For fire and sound rated construction the Tile Backer Board must extend to the floor.

Column Fireproofing

Fireproofing with G-P Firestop Gypsum Wallboard provides a fast, efficient and economical method of protecting steel columns. Fire resistant assemblies of two, three and four hours are obtainable depending upon the number of layers of 5/8" or ½" G-P Firestop used. These layers are held in place by a combination of screws and metal studs. The two, three and four hour fire rated assemblies of Firestop have passed Official Fire Tests conducted by the Underwriters' Laboratories.

Fire Resistance—For three hour protection, two layers of ½" Firestop Type XXX can be used. Test No. X513 (UL 39-3 hour). Two hour protection can be obtained using 1 layer of ½" Firestop Type XXX. Test No. X520 (UL 20-2 hour). These are for heavyweight columns (14 W.F. 228).

For lightweight columns (10 W.F. 49) use 4 layers of 5/8" G-P Firestop Type X for 4 hour protection, 3 layers for 3 hours. Test No. X509 (UL 18) and 2 layers for 2 hour, Test No. 517 (UL 8).

Lighter—As compared to other types of fireproofing, a dead load saving of from 50 to 75% can be realized with G-P Firestop Column Fireproofing.

Speed of Erection—G-P Firestop Gypsum Wallboard can be installed quickly and easily when used for column fireproofing following G-P details. Minimum amount of the wire and adhesives are used.

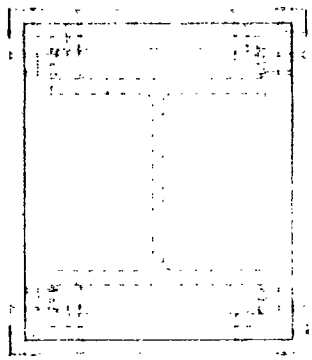

ILLUSTRATION—THREE-HOUR fire rated steel column assembly with 5/8" Firestop. X509 (UL 18).

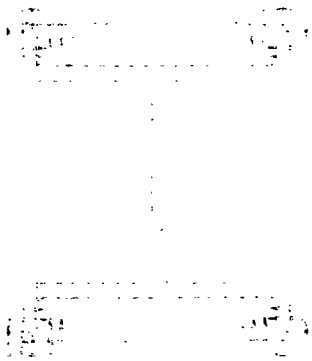

ILLUSTRATION—TWO HOUR fire rated steel column assembly with 5/8" Firestop. X517 (UL 8).

Application Over Masonry Walls

On masonry walls either above or below grade, be sure the wall is properly waterproofed before studding of furring is applied. Although moisture barrier gypsum wallboards are available—they are no substitute for proper waterproofing.

Wood Strips or Metal Channels: Apply furring horizontally or vertically. Space 16″ o.c. for ¼″ and ⅜″ wallboard, and 24″ o.c. for ½″ and ⅝″ wallboard. Use concrete stub nails or power driven fasteners to install furring. Wallboard should be applied at right angles to furring. Use Georgia-Pacific Insulating Wallboard.

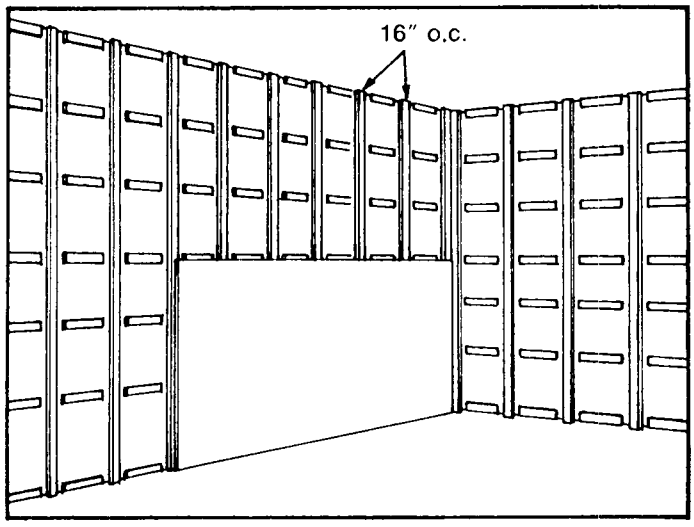

Georgia-Pacific Grabit™, a Masonry Adhesive: Apply 1″ ribbons of Grabit to each edge and 16″ o.c. in field of back of each piece of wallboard. Be sure surface to be covered is reasonably straight, and free of fragments of mortar or other protrusions. The adhesive fills in irregularities in the masonry surface. Grabit may also be used to apply wallboard to polystyrene insulation material that has been used against the masonry. Grabit may be used without waterproofing on exterior walls which are above grade. Temporary fasteners or bracing may be necessary until Grabit sets.

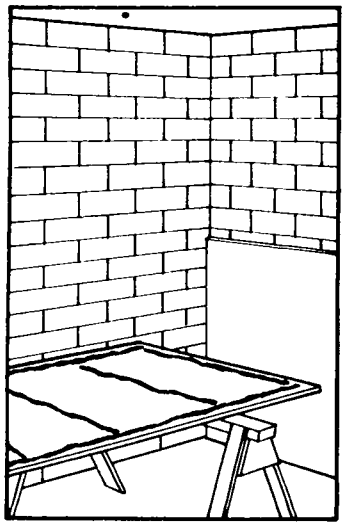

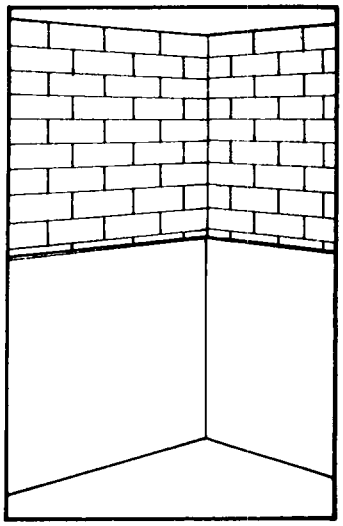

Installation Details
Application of Rigid Predecorated Panels to Gypsum Substrate

Use ⅜ in. or ½ in. gypsum wallboard. Attach to studs with 1⅜ in. wallboard nails, 1 in. drywall screws (metal studs) or drywall stud adhesive. Joints need not be taped or sealed. Install the gypsum wallboard vertically with the edges centered on the framing members.

The rigid predecorated panels should be applied using a bead of panel adhesive over each stud. Secure paneling at top and bottom plates with 4d. finishing nails 12 in. o.c. and one at mid-height per stud.

The addition of gypsum wallboard as a substrate when using predecorated panels provides increased FIRE RESISTANCE and SOUND CONTROL.

Test Results

	Paneling (No Gypsum)	Paneling With ⅜ in. Gypsum	Paneling With ½ in. Gypsum
Burn thru Time	8 min.	42 min.	73 min. (plus)
Better Sound Rating	28 STC	40 STC	40 STC
Better Impact Resistance	26	82	82

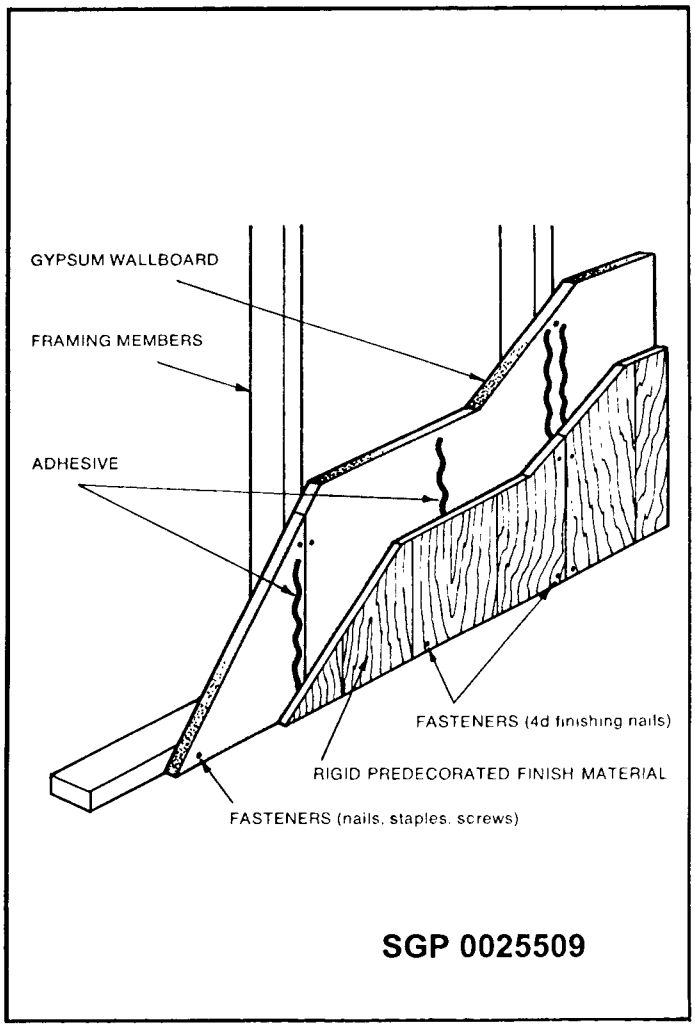

Wood and Steel Stud Application

There are many different kinds of construction systems and all are based on the requirements of your particular building installation. Basically, the main considerations are usually: **Fire Resistance, Sound Transmission, Relative Strength of the Installation, Dimensional Restrictions** and lastly **Economy.**

After the wall and floor and ceiling constructions have been selected, it is important that they be installed properly. The following precautions should be taken during installation to avoid situations or conditions which will detract from the sound control properties of the assembly:

Avoid connecting plenum chambers, ducts, vents, etc. These permit the unrestricted flow of sound. Corrective measures are to make partitions full height, and use ducts lined with absorbent material.

Materials: All gypsum wallboards, metal runners and accessories, joint system products used, shall be G-P Gypsum Wallboard 3/8", 1/2" or 5/8" thick Regular or Firestop, 4' wide x ceiling height for vertical application or up to 16' long for horizontal application, tapered edge.

Framing: Prior to the gypsum board application, all framing members should be true and firmly nailed in a plane surface. Provide double studs at all corners. Both inside and outside intersections are formed by extending one edge of a panel over the other edge in a flush position and covering with tape and joint treatment. In singly ply installation, all ends and joints of gypsum wallboard shall occur over framing members, except that this is not required for treated joints at right angles to framing members.

Application: Gypsum wallboard may be applied horizontally or vertically to framing with nails or screws. (Alternate method-stud adhesive may be applied to studs before applying gypsum wallboard.) The gypsum wallboard shall be attached with nails meeting ASTM-C514 or with 1 1/4" long G-P Type "W" drywall screws—1" long G-P type "S" Drywall screws.

SINGLE PLY GYPSUM WALLBOARD MAXIMUM FRAMING SPACING

Wallboard Thickness	Application
3/8" sidewalls	Horizontal or Vertical 16" o.c.
1/2" sidewalls	Horizontal or Vertical 24" o.c.
5/8" sidewalls	Horizontal or Vertical 24" o.c.

NAILING OR SCREW SPACING FOR SINGLE-PLY GYPSUM WALLBOARD

	(Framing 16" o.c.)	
Wallboard Thickness	**Single Nailing**	**Double Nailing**
3/8" sidewalls	8" o.c. Max.	12" o.c. Max.
1/2" sidewalls	8" o.c. Max.	12" o.c. Max.
5/8" sidewalls	8" o.c. Max.	12" o.c. Max.
	Framing 16" o.c.	Framing 24" o.c.
Wallboard Thickness	**Screw Spacing**	**Screw Spacing**
3/8" sidewalls	16" o.c. Max.	—
1/2" sidewalls	16" o.c. Max.	12" o.c. Max.
5/8" sidewalls	16" o.c. Max.	12" o.c. Max.

NOTE: Nails or screws should be driven not less than 3/8" from edges or ends of panels. While fasteners are being driven, the wallboard shall be held in firm contact with the underlying supports. Preferably, application of fasteners should proceed from the central portion of the wallboard to the ends and edge. Dimple nails or screws without breaking the face paper. **Joints:** All joints should be taped and finished with tape and joint compound, nail or screw heads should be finished with joint compound. Exterior angles are covered with G-P Metal Casing Beads and finished with joint compound.

Solid and Semi-Solid Gypsum Partitions

Oher systems of drywall construction consists of the absence of wood or metal studs, either of which has its particular fire resistance deficiency value. In the following four systems (partially explained below) the common factor in each is that they are all constructed (except for floor ceiling runners) entirely of some form of gypsum incombustible material.

2" Solid Laminated— (Non-Load Bearing)

A 1" gypsum core board with a 1/2" gypsum laminated to each side; no air space, a 2" solid wall. Has a 2 hour fire rating, economical to buy and construct, an STC rating of 35, creates smooth monolithic walls and creates extra usable floor space.

2" Solid Laminated Floor and Ceiling Details

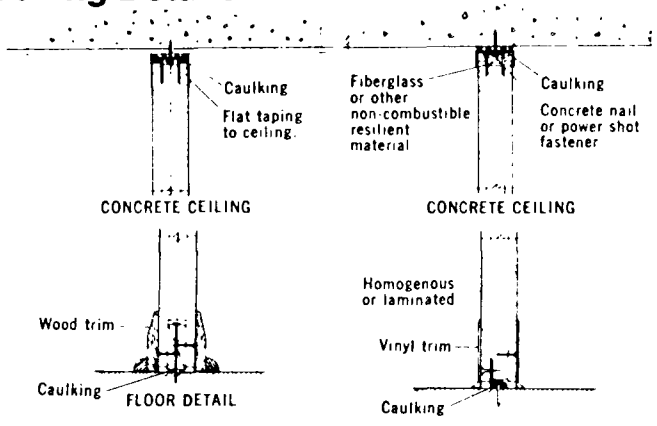

2 1/4" Semi-Solid Laminated Gypsum Wallboard

2 1/4" Semi-Solid Laminated—(Non-Load Bearing)—A center vertical rib (or stud) composed of 2 layers of gypsum laminated (1" x 6" rib, 24" o.c.) is the base upon which 5/8" gypsum wallboards are laminated to each side. This leaves intermittent 1" dead spaces for wiring. Has a 1 hour fire rating, simplicity of installation saves money, a 30 decibel STC, creates smooth walls and provides extra floor space.

Double Solid Laminated— (Non-Load Bearing)

Consists of laminating 1/2" gypsum wallboard to a 1" tongue and groove coreboard homogenous or laminated on each side of a 3" air space. There is absolutely no connection over the air space except at the jambs. Has a 2 hour fire rating, greater strength than standard frame or thin solid wall, a 47 decibel STC and smooth wall surface.

Triple Solid Laminated— (Non-Load Bearing) SGP 0025510

The center piece is a 1" gypsum core panel running the height and length of wall, on one side of which is dead space the other side is filled with fiberglass insulation. Outer section of wall (on both sides) is a 1/2" wallboard laminated to 1" coreboard (this gives a 1 1/2" wall on both sides of center section). This gives a three hour fire rating, a 57 decibel STC and smooth monolithic walls.

5/8" Firestop®—2 Hr. Rating—Incombustible, Floor/Ceiling

2" SAND-GRAVEL CONCRETE

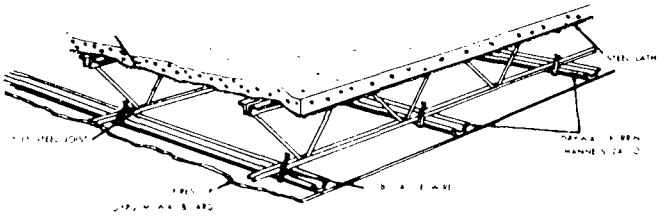

U.L. Design G505 (UL 259)—2 Hr. (with 2" concrete)

G-P produces lighter weight board and better fire resistance! 5/8" Firestop Gypsum Wallboard reinforced with glass fibers covers all ratings listed by Underwriters' Laboratories for the 5/8" thick material. This means that G-P 5/8" fire-rated board can be used in all kinds of wall, floor and ceiling assemblies.

The 10% reduction in weight can result in savings in labor and materials in multiple story construction.

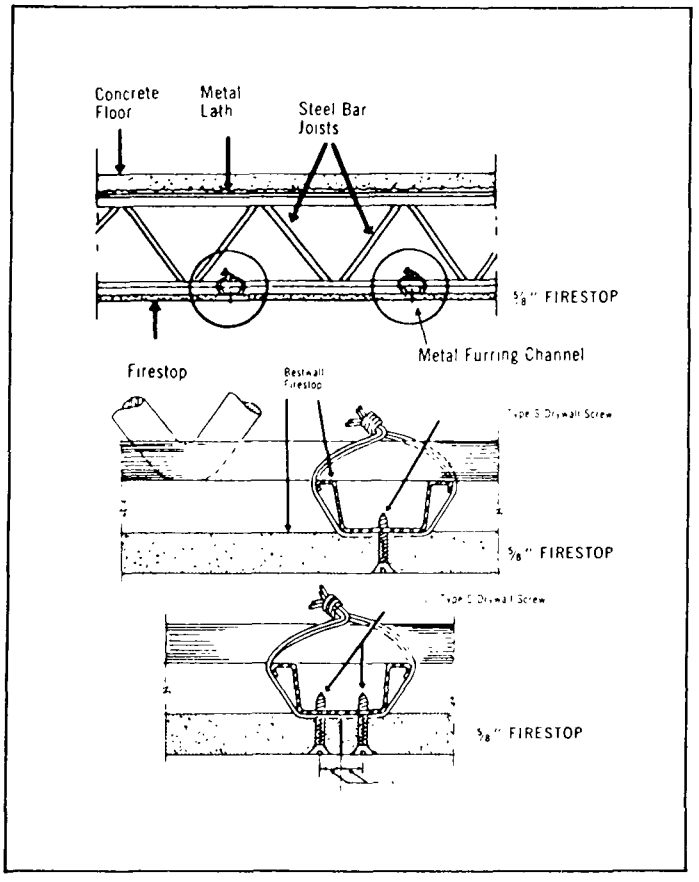

Drywall Nails & Screws Selector Guide

	Description	Applications
	1¼" GWB-54 Annular Ring Nail 12½ ga.; with a slight taper to a small fillet at shank. Bright finish; med. diamond pt.	½", 3/8" and ¼" Wallboard; ½" and 3/8" Gypsum Backer Board to wood frame
	1⅜" Annular Ring Nail (Same as GWB-54 except for length)	5/8" Wallboard to wood frame
	2½" 7d Nail 13 ga., ¼" diamond head	5/8" Firestop Wallboard face layers over ½" Bestwall Sound Deadening Board or 2 layers 5/8" Firestop to Wood Studs
	1⅞" 6d Nail 13 ga., ¼" diamond head	3/8" and ¼" Wallboard over existing surface, wood frame
	1⅞" 6d Nail 13 ga., ¼" diamond head	5/8" Firestop Wallboard to wood frame
	1⅝" 5d Nail 13½ ga., 15/64" diamond head	½" Firestop Wallboard to wood frame
	1⅛" Matching Color Head Nail (Steel) 1⅞" Matching Color Head Nail (Steel)	Predecorated Gypsum Wallboard; to wood frame over existing surface, wood frame
	1⅜" Bestwall Matching Color Head Nail (Brass)	Predecorated Gypsum Wallboard (colors) to wood frame
Wallboard to Metal Framing	1" Drywall Screw Type S	Single Layer Wallboard to 25 gauge Steel Studs. Wallboard to Resilient Channel. Wallboard to Metal Furring.
	1¼" Drywall Screw Type S 1⅜" Drywall Screw Type S	1" core units to L Runner in 2" Solid and Semi-Solid Partition Systems.
	1⅝" Drywall Screw Type S	Double-Layer Wallboard to 25 gauge Steel Studs. Double-layer Wallboard to Metal Furring.
	1⅞" Drywall Screw Type S	Double-Layer Wallboard.
	1" Drywall Screw Type S-12 Also available in ¾", 1⅛" & 1 1/16" lengths	For single or multi-layer application of Wallboard to heavy gauge steel (up to 12 gauge).
Wallboard to Wood Framing	1¼" Drywall Screw Type W	Single Layer Wallboard to Wood Framing.
Wallboard to Gypsum Ribs	1½" Drywall Screw Type G 1⅝" Drywall Screw Type G	Wallboard to Gypsum Ribs in Semi-Solid Partition Systems.
Wood Trim to Metal Framing	1⅝" Drywall Screw Type S Trim Head 2¼" Drywall Screw Type S Trim Head	Wood trim over single layer of Wallboard on 25 gauge Steel Studs. Wood trim over double layer Wallboard on 25 gauge Steel Studs.
Metal Studs to Door Frames and Runners	3/8" Drywall Screw S-12 Pan-Head	Metal Door frame to 12 gauge (max.) Steel Studs. Metal Studs to Metal Runners.
Metal Trim & Door Hinges to Metal Framing	⅞" Type S-18 Oval Head Also available in ¾", 1⅛" & 1 5/16" lengths	Door hinges to door frame and aluminum components to metal.

Horizontal and Vertical Application: TYPE S AND G—Metal studs or furring spaced 24" on center. Screws should be spaced 12" on center unless otherwise noted in the detailed assemblies shown in Georgia-Pacific literature.

TYPE W—Wood studs 16" or 24" on center. Screws should be spaced 12" on center unless otherwise noted in the detailed assemblies shown in G-P literature.

Selection of the proper nail for each application is extremely important, particularly for fire-rated constructions. The nails recommended comply with performance standards adopted by the Gypsum Association.

ETERNAWALL™ VINYL SURFACED GYPSUM

Combines gypsum wallboard with the beauty of sheet vinyl

These fire-resistant panels are factory laminated with a quality, washable vinyl sheet providing a permanent scuff, crack and chip-resistant surface. Colors are fade-resistant and the texture or design will not be impaired when cleaned.

Eternawall panels are available in 12 standard colors and 3 simulated woodgrains. The long edge is completely wrapped with vinyl and eased to form a modified beveled edge.

Georgia-Pacific Firestop® Eternawall™ is available when the wall construction requires the wallboard to be of fire rated construction. Firestop® Eternawall™ has a wallboard base containing greater glass fiber reinforcement and unexpanded vermiculite.

Specifications

All vinyl surfaced gypsum wallboard indicated on the drawings shall be Georgia-Pacific Eternawall™ as manufactured by the Gypsum Division of Georgia-Pacific Corporation. The panel construction shall consist of an unsupported vinyl sheeting of wall surfacing grade factory laminated to G-P Regular or Firestop® Gypsum Wallboard. The long panel edges shall be a modified bevel and completely wrapped with vinyl. The colors and patterns shall be as selected from the Standard Line of Eternawall.

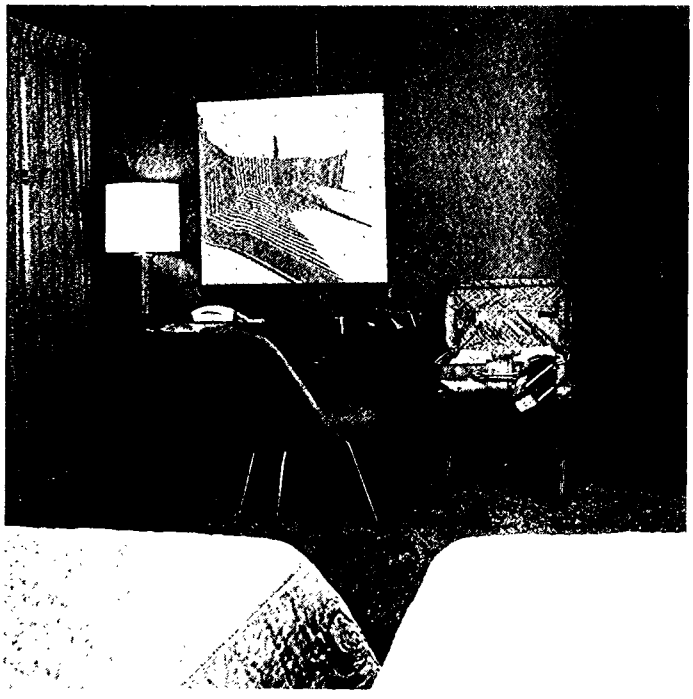

TANGERINE

Application

Demountable wall systems are installed by using any of the appropriate or approved color-matched moldings. To laminate to existing wall surfaces, use G-P Laminating Compound and secure panels mechanically at top and bottom plates. Panels may be applied with adhesive directly to metal studs, wood framing or furring strips. For application directly to masonry walls, use G-P Grabit™ Masonry Adhesive.

PRODUCT DATA

Thickness: ¼", ⅜", ½" and ⅝" Regular Gypsum Wallboard, ½" and ⅝" Firestop® Gypsum Wallboard. ½" Regular Eternawall™ is the stock thickness.

Sizes: 4' x 7' to 4' x 16' in one foot increments. Special lengths on request. Special size (length and width) Eternawall™ partition board available on special order basis. 4' x 8' and 4' x 10' are the stock sizes.

FIRE HAZARD CLASSIFICATION

⅜", ½" and ⅝" wallboard consisting of gypsum core, surfaced on both sides with paper or with a vinyl facing on one side.

	Fire Hazard Classification Basic Board	With Vinyl Facing
Flame Spread	15	25
Fuel Contributed	15	10
Smoke Developed	0	20-50

Classified by Underwriters' Laboratories, Inc.

EDGE DETAIL

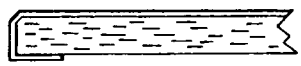

Modified Beveled Edge

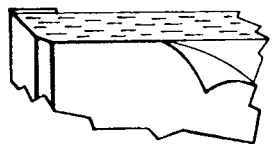

Color coated stainless steel nails are available to match all Standard colors and woodgrains. Trim accessories are available in 8' x 10' lengths to match all standard colors and woodgrains.

TRIM ACCESSORIES

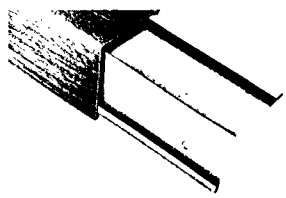

Snap-On Corner Bead

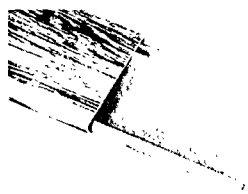

Snap-On Interior Trim

The above trim accessories and color coated stainless steel nails are available to match all Standard colors and woodgrains.

SOUND CONTROL PARTITIONS—Eternawall™ Surfaced

These fire and sound rated vinyl-surfaced wallboard systems eliminate the need for battens. G-P Firestop® Eternawall™ is laminated directly to G-P ¼" Incombustible Gypsum Sound Deadening Board. They are not only simple to install but they are inexpensive and provide a very durable wall.



U.L. Design No. 30
Fire Rating—1 Hour Combustible
STC-45

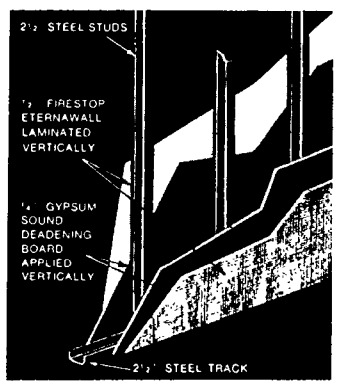

U.L. Design No. 32
Fire Rating—1 Hour Incombustible
STC-45

F124

SGP 0025512

shaft liner™

Laminated Gypsum Enclosure System

Description

Georgia-Pacific Shaft Liner is a solid gypsum board partition for enclosing elevator shafts, stairs, smoke towers and other such shafts. It is a non-load bearing wall, designed for resistance to uniform wind loads without excess deflection. Important advantages of the system are:

1. Much lighter weight than masonry,
2. Non-combustible and economical,
3. Can be completely erected from one side,
4. Practically eliminates the need for scaffolding,
5. Panels can be individually removed for backside maintenance,
6. Minimum clean-up.

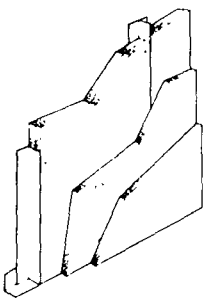

2 HOUR SHAFT WALL PARTITION

The partition consists of a basic pre-laminated core unit 1⅝" thick by 24" wide, which fits into a top metal "J" track and bottom "L" runner. Metal "T" splines are inserted between each core unit. The core units are subsequently secured to the "T" splines, and top and bottom runners. Installation of the facing layers and surface finishing can be accomplished later to coincide with interior partitions.

This system meets the ATSM E119 requirements for 1 & 2 Hour Fire Resistive Classifications. It is also designed and tested to meet a variety of wind loads at various heights. The standard gauge of the metal components is 20 gauge. However, other than the 20 gauge may be used, as shown in the table on the following page for various wall heights, deflections and wind loads.

The facing generally consists of 2 layers of ½" G-P gypsum board. The exposed layer may be ½" Dens-Cote Base and Dens-Cote Veneer Plaster, or ½" G-P Tile Backer.

G-P Shaft Liner System has passed the following fire tests:

1½ Hour System—Ohio State Univ. T-4982
2 Hour System—Ohio State Univ. T-4958
2 Hour Chase Wall—Ohio State Univ. T-4991
2 Hour Alternate Wall Underwriters Lab. Design 42.

Components of the Georgia-Pacific Shaft Liner conform to the following specifications:

Wallboard, ½" and ⅝"	ASTM C 36
Wallboard, 1"	ASTM C442
Dens-Cote Base, ½" and ⅝"	ASTM C588
Dens-Cote Veneer Plastic	ASTM C587
Tile Backer	ASTM C630
Metal for Components	ASTM C446

Metal Components

"J" Track

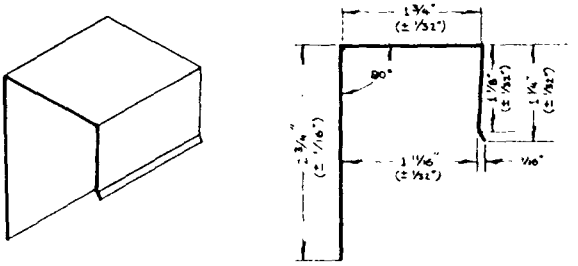

"T" Spline

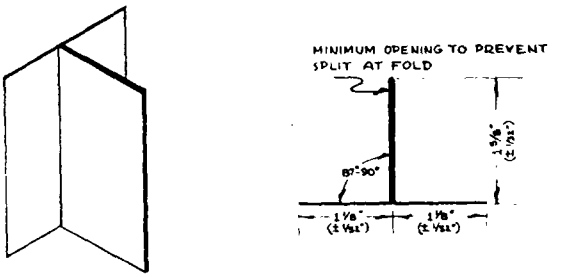

Angle Runner

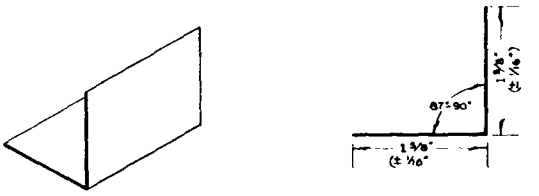

Installation

Basic 2 Hour System (T-4958)

Install the perimeter framing first which consists of the top metal "J" and bottom "L" tracks. These components are to be secured with power driven fasteners, or equivalent, at 24" maximum centers. The 1⅝" Shaft Liner core units are inserted top first into the "J" track and pushed flush against the bottom angle runner. These core units are separated by the "T" splines, which are positioned so the flat, or flange, side faces the shaft. Type S-12 drill point screws 2"-2⅜" long are used, 24" o.c., to fasten the core to the "T" splines. At the extreme top and bottom, screw the core to the runners, at points 2" on each side of the spline, using the drill point screws. Screws will protrude slightly on the unfinished shaft side.

Two layers of ½" Georgia-Pacific Regular Wallboard, 4 ft. wide by partition height are applied to the face side. Each is installed parallel to the Shaft Liner panels. The first layer is offset from the "T" spline by 12", and the second layer staggered 24" from the first. Installation is by ⅜" beads of adhesive, or full lamination. For improved sound isolation, adhesive should fill the joints at each "T" spline. The facing sheets are also secured with 1⅝" Type G screws spaced 24" o.c. at edges and center (1st layer) and 16" o.c. at edges and center (2nd layer). Finish joints and screw heads in normal manner in preparation for the final decoration.

Alternate 2 Hour System (UL42-2 Hour)

The "L", "J" and "T" metal components and the 1⅝" core unit are erected in the same manner as the basic system. Two layers of ⅝" G-P Firestop® wallboard 4' wide by partition height are then applied to the face side. Use adhesive (or laminating compound) and screws as described in the basic system. Use 1⅞" screws on finish layer into "T" splines. See page E/31 for details.

2 Hour Chase Wall (T-4991)

After erecting metal components and 1⅝" core unit, install G-P "L" angle runner horizontally on 40" centers through core unit to "T" spline. Erect 2½", 25 gauge steel studs and track 3" from core unit. Brace studs with angle runner. Apply one layer of ⅝" Firestop® to studs. See page E/31 for details.

1½ Hour Wall (T-4982)

The "L", "J" and "T" components and the 1⅝" core unit are erected in the same manner as in the basic 2 Hour system. The one layer of ⅝" G-P Firestop® is screw-laminated to the core unit and metal components. Offset joints from "T" splines by 12".

The Georgia-Pacific Shaft Liner System is designed for versatile performance. Ease of construction from one side makes this wall ideal for use in locations other than vertical openings (such as stairwells). The system takes much less space than masonry or stud walls. Both sides can be finished by adding a layer of regular board over the "T" flanges on the back side. However, if the back side is to be finished, the wallboard should be applied first before screw attaching the Shaft Liner panels to the metal components.



1. INSTALLING FLOOR TRACK.



3. ATTACHING CORE TO T-SPLINE.

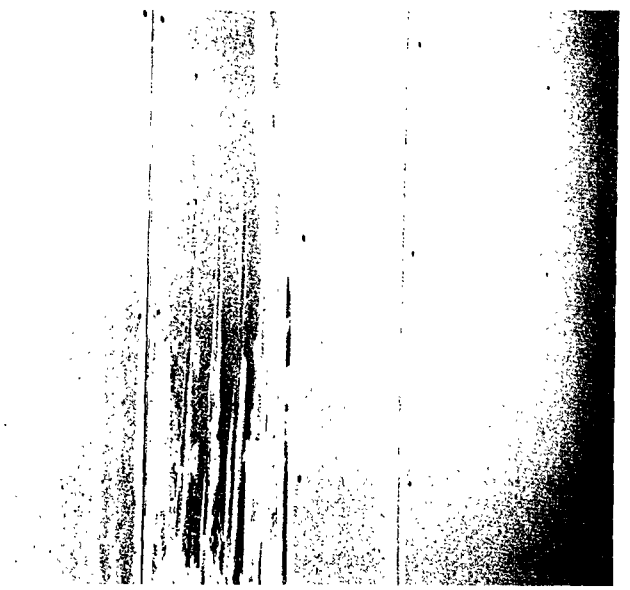

2. INSTALLING CORE PANEL.



4. APPLYING FINISH LAYERS.

SGP 0025514

shaft liner™

HEIGHT SELECTION TABLE*

System	Vertical "T" Spline Gauge	Deflection	HEIGHT BASED ON POUNDS PER SQUARE FOOT				
			5=	7.5=	10=	12.5=	15=
1½ Hour Wall	22	L/120	10'	10'	9'	9'	—
		L/240	9'	8'	—	—	—
	20	L/120	14' 4"	12' 10"	11' 4"	10' 7"	9' 10"
		L/240	11' 4"	10' 1"	9'	8' 1"	7' 10"
2 Hour Basic Wall	22	L/120	10'	10'	10'	10'	9'
		L/240	10'	10'	9'	8'	—
	20	L/120	17'	15' 4"	13' 8"	12' 10"	12'
		L/240	13' 9"	12' 3"	10' 11"	9' 7"	8' 6"
	18	L/240	14'	12' 6"	11'	9' 6"	8' 6"
	16	L/240	15'	13'	12'	10'	9'
	14	L/240	16'	14'	12' 6"	11'	10'
2 Hour Chase Wall	16 ga. 3⅝" Steel Stud	L/120	23'	20' 7"	18' 3"	17' 1"	15' 11"
	25 ga. 2½" Steel Stud	L/240	14'	12'	10'	8'	—
	16 ga. 3⅝" Steel Stud		18' 3"	16' 4"	14' 6"	13' 7"	12' 8"
2 Hour Alternate Wall	22	L/120	10'	10'	10'	10'	10'
		L/240	10'	10'	9'	8'	—
	20	L/120	19'	17' 6"	15'	14'	13' 2"
		L/240	15' 1"	13' 6"	11' 11"	11' 2"	10' 5"

NOTE: 22 ga. "T" splines should not be used over 10' 0"

*Height selection table based on tests by Wiss, Janney, Elstner & Associates

General Working Conditions

During cold weather, temperatures in the building should be maintained at not less than 50°F during application of adhesives or joint treatment. There should be adequate ventilation to dispose of excessive moisture during these periods.

For steel frame construction, installation of top "J" track should be completed before application of any spray-on fireproofing.

The poured concrete floor should be reasonably smooth in the area where the "L" track is to be installed. If the "L" track is installed close to the edge, the concrete may spall unless a fastening plate is set into the concrete to which the track can then be applied.

The "T" spline and Shaft Liner panels should be no shorter than ¾" less than height of the shaft opening.

Limitations

1. Georgia-Pacific Shaft Liner walls are non-load bearing.
2. Do not use in areas of unusually high moisture conditions.
3. Electrical or mechanical piping, wiring, etc. should not be incorporated unless furred construction is used.
4. Adhere to gauges and heights shown in table.
5. Provide control joints at maximum 30 ft. intervals.
6. When hand rails or other heavy items are anchored to the Shaft Liner System, install 22 gauge metal strip between the Shaft Liner panels and facing layers.

SGP 0025515

shaft liner

DETAILS
2 HR. FIRE RATED WALL

Concrete Beam

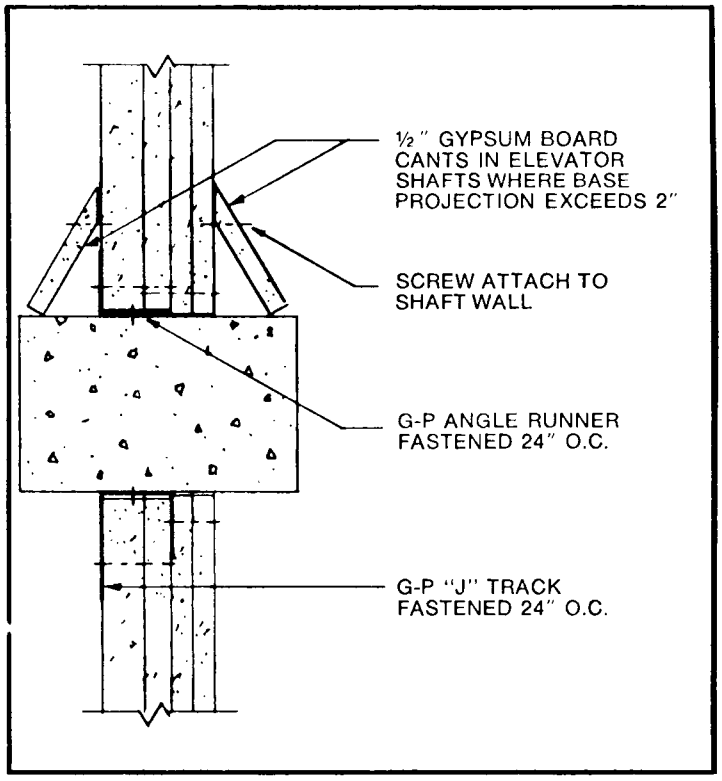

Wall Intersection

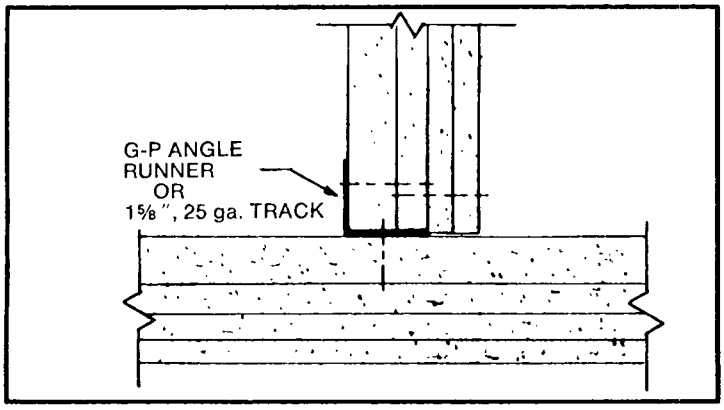

Top

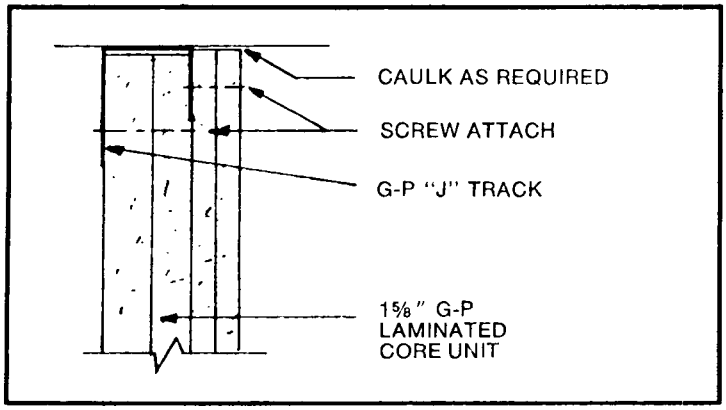

End

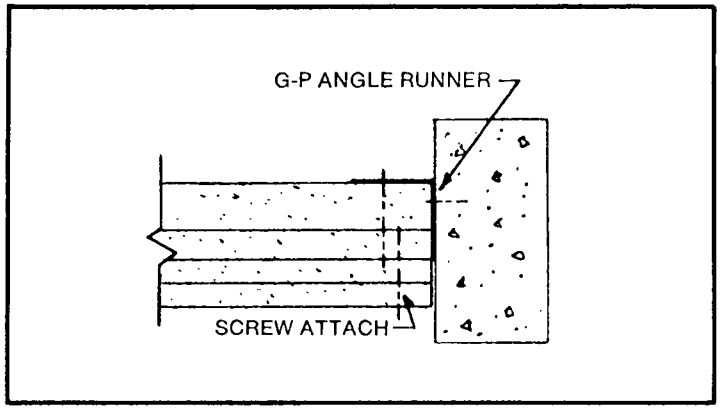

Bottom

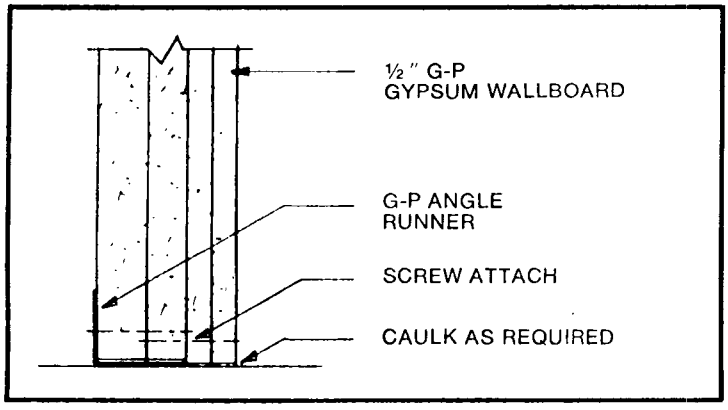

Corner

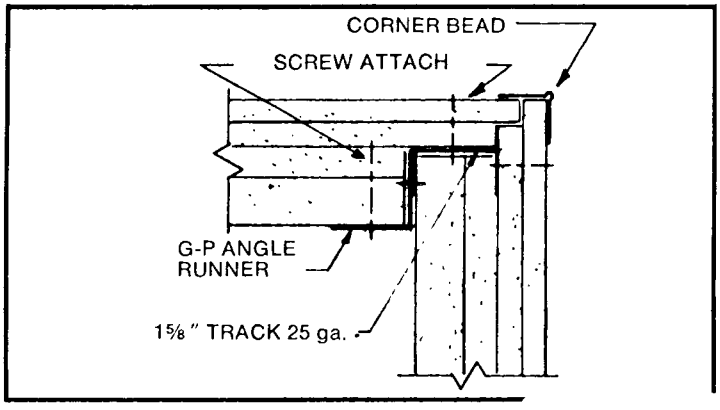

SGP 0025516

Steel Beam

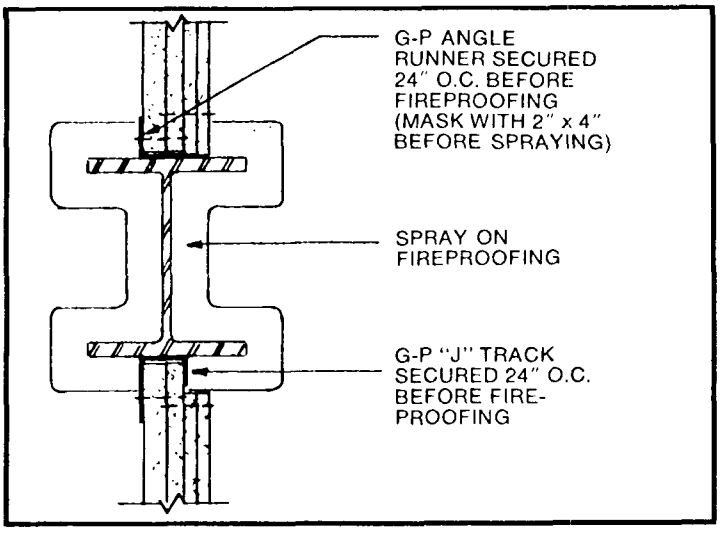

Column Bypass

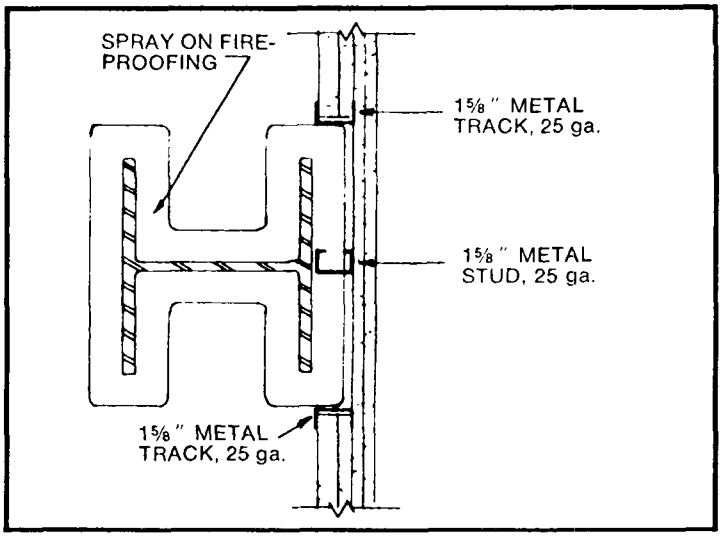

Corner Column

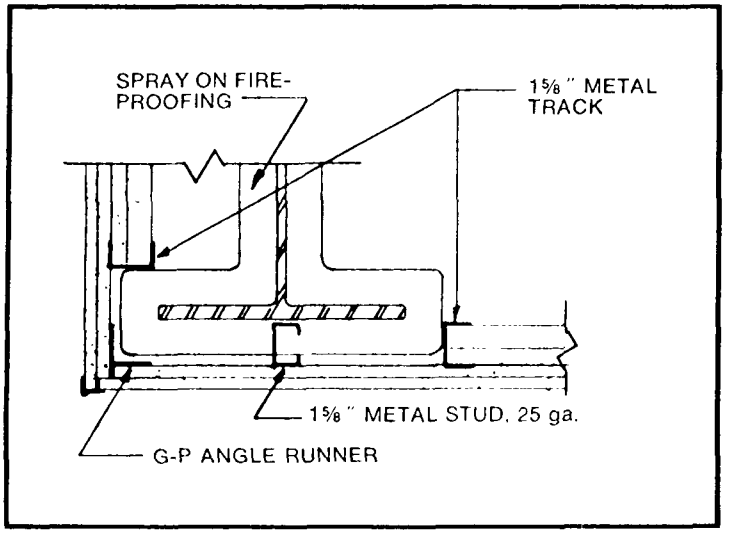

Handrail Attachments

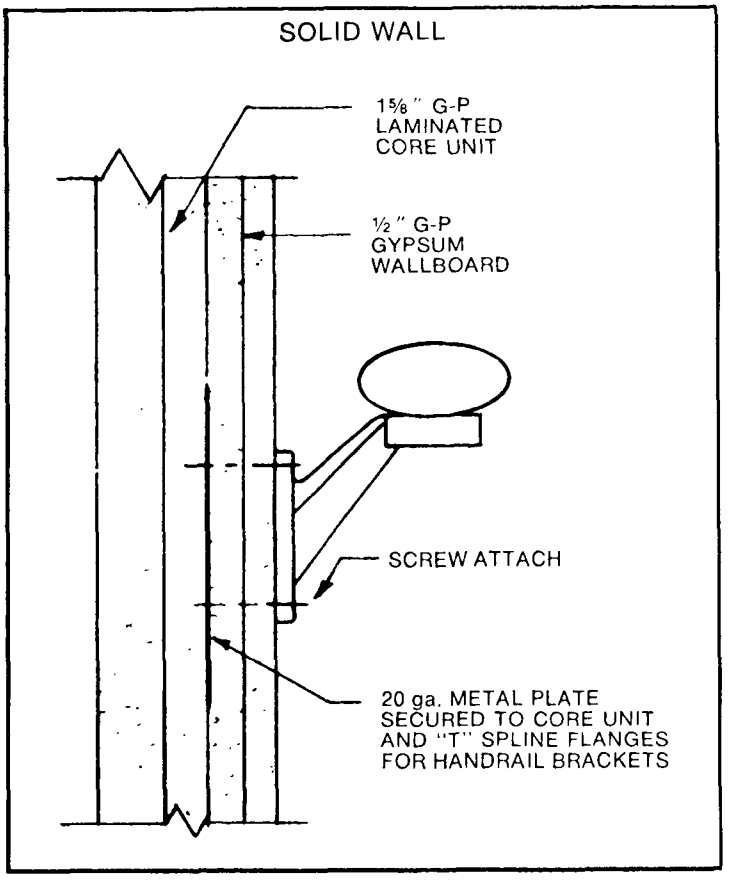

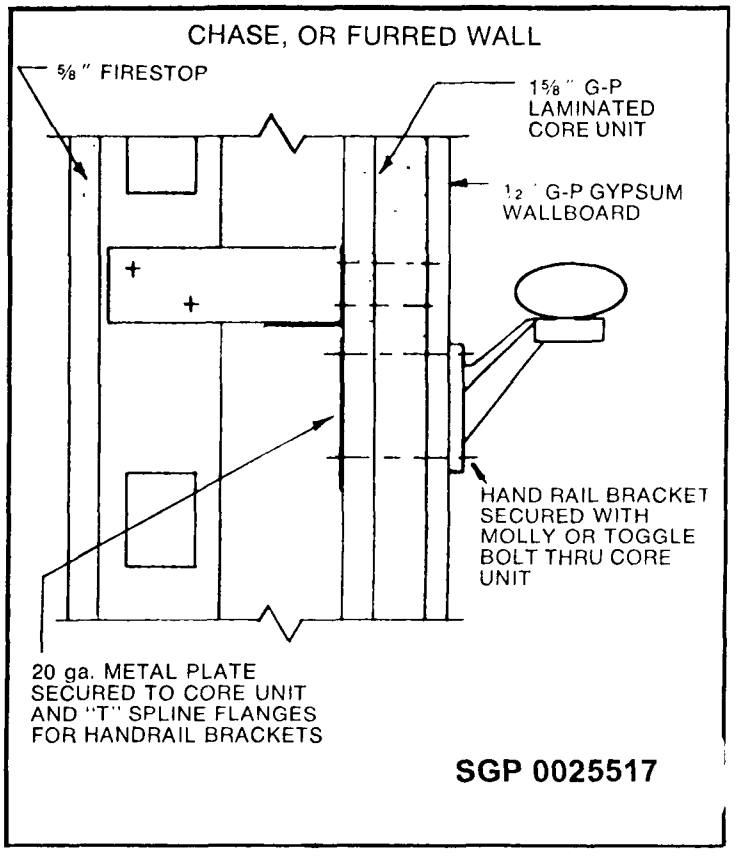

SGP 0025517

Rough Door Opening

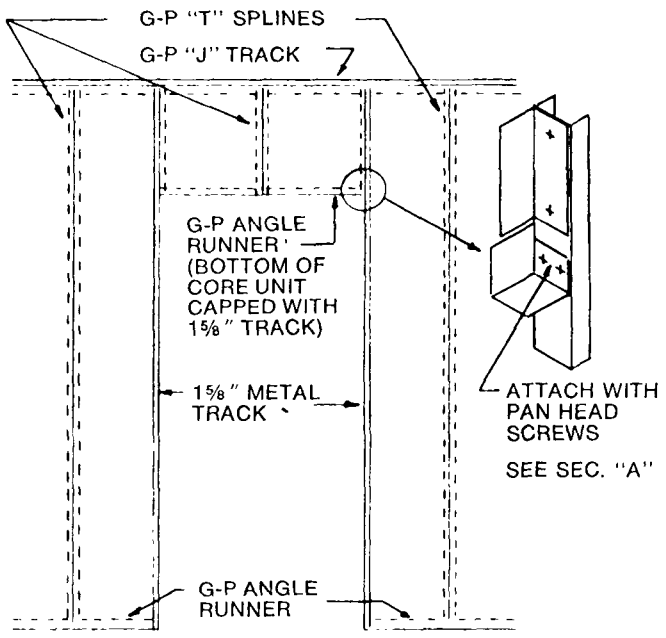

Duct Opening

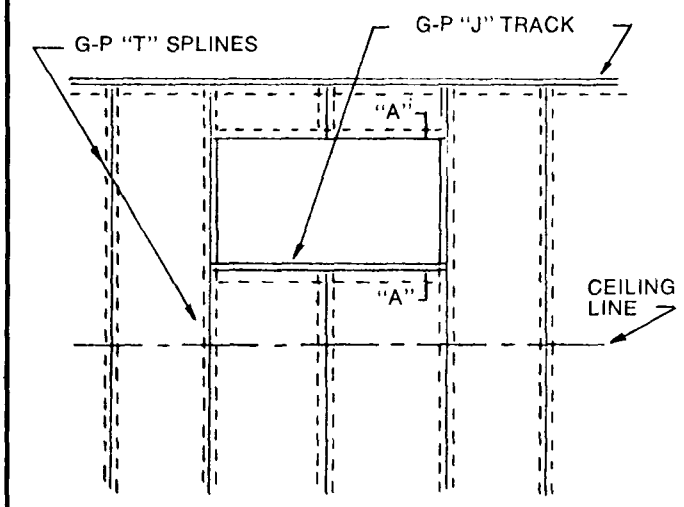

Section "A" Elevator Door Head

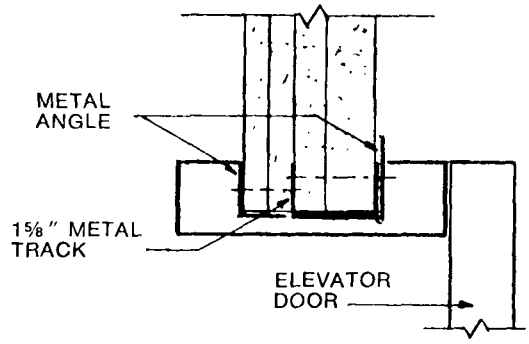

NOTE: ELEVATOR FRAME, DOORS, & OPERATING ACCESSORIES TO BE SUPPORTED SEPARATELY

Section "A-A" Duct Opening

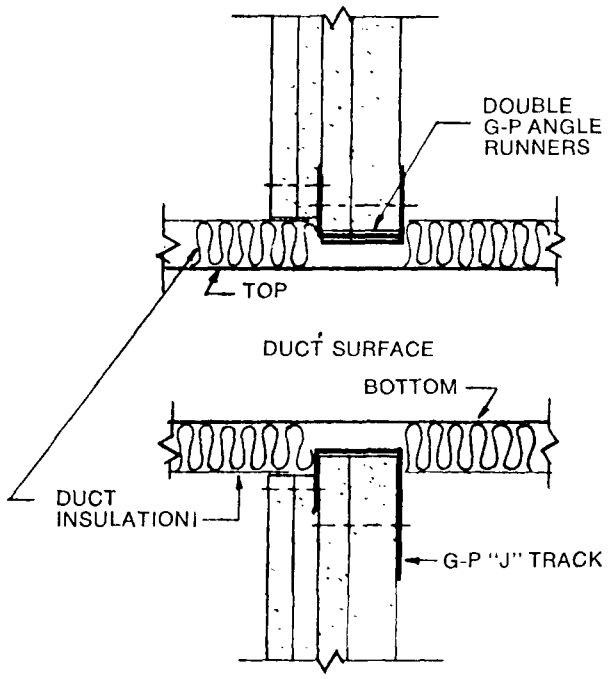

SGP 0025518

Expansion Joint

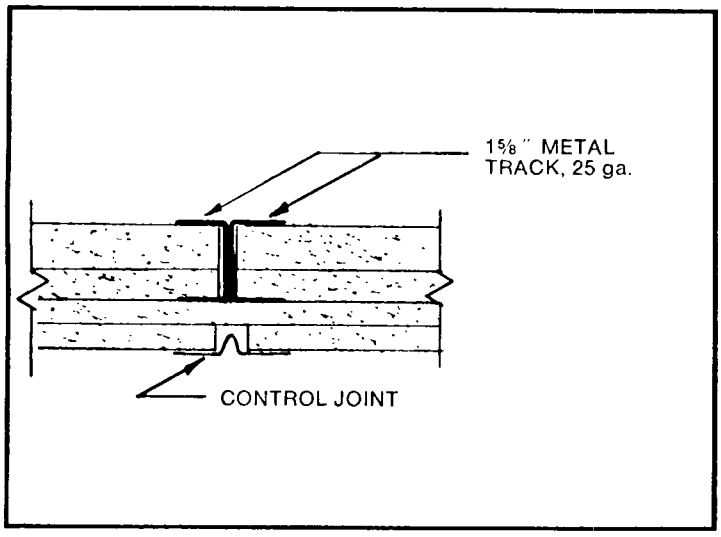

Outlet Box

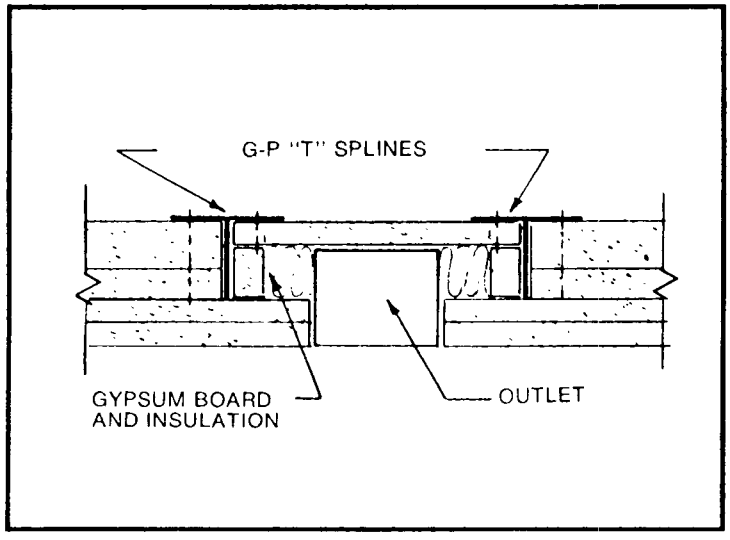

Chase Wall

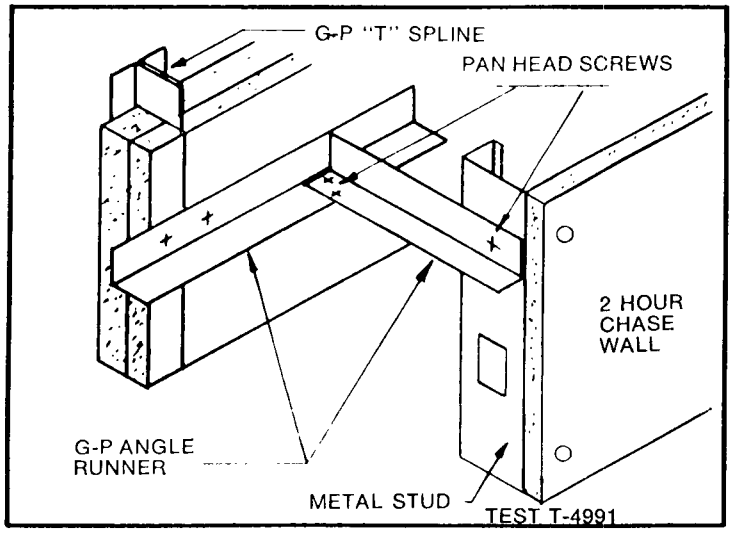

Wall Assemblies

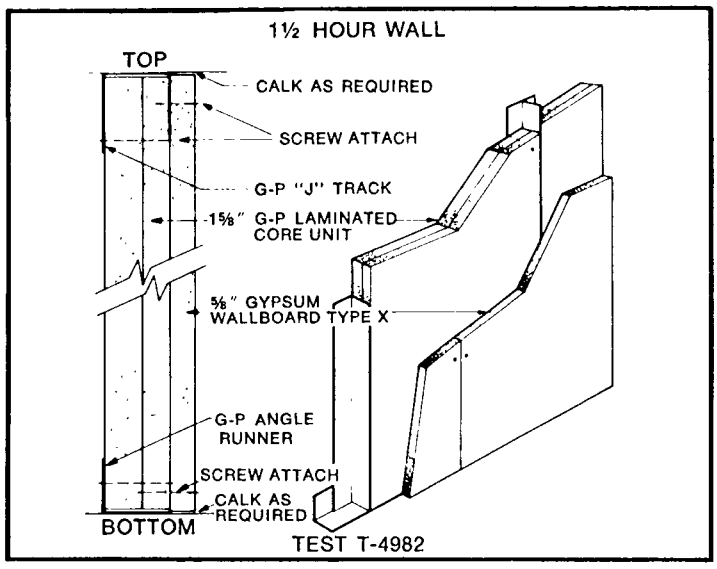

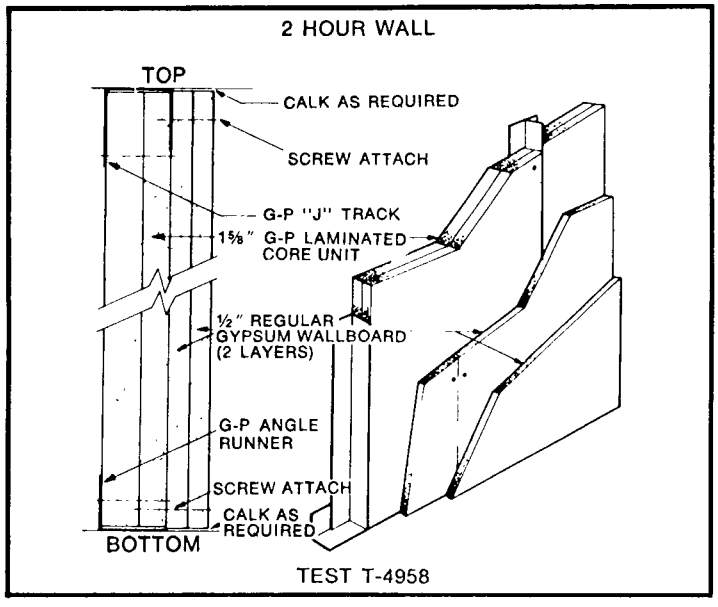

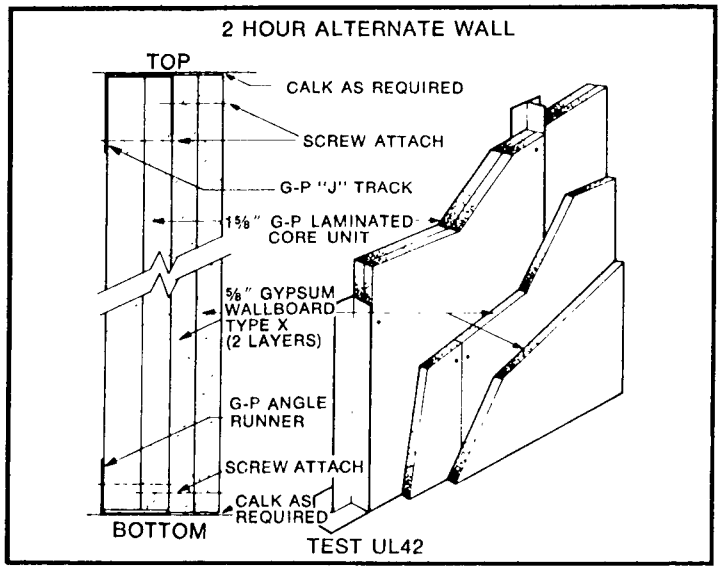

DISTRIBUTION CENTERS

ALABAMA
Birmingham
3400 Ball St.
Mobile
3451 Georgia-Pacific Ave
& Beltline Hwy.
Montgomery
4542 Baldwin Ave.

ARIZONA
Phoenix
4801 West Colter St.

ARKANSAS
Little Rock
3101 Dugan St.

CALIFORNIA
Anaheim
519 E. Katella Ave.
Berkeley
800 Grayson St.
Los Angeles
14750 Nelson Ave
City of Industry
Fresno
5286 E. Home Ave.
Riverside
1450 Citrus St.
Sacramento
2951 Orange Grove Ave.
North Highlands
Salinas
1031 Industrial Ave.
San Diego
2200 Haffly St.
National City
San Fernando
7891 Deering Ave.
Canoga Park
San Jose
660 East Gish Rd.

COLORADO
Denver
1505 W. Third Ave.

CONNECTICUT
Wallingford
805 N. Colony St

DELAWARE
Wilmington
Wilmington Marine Terminal

FLORIDA
Jacksonville
1333 Haines St
Miami
3201 N.W. 110th St.
Orlando
2721 Regent Ave.
Tallahassee
889 Mabry St.
Tampa
3701 E. Columbus Dr.
West Palm Beach
900 W. 15th
Riviera Beach

GEORGIA
Albany
1013 Worth St.
Atlanta
125 Ottley Drive, N.E.
Augusta
1153 Gordon Highway
Savannah
440 Magazine Ave.

IDAHO
Boise
1675 Commerce Ave.

IOWA
Des Moines
5631 Northeast 17th St.

ILLINOIS
Chicago
10450 Waveland Ave.
Franklin Park
17040 Lathrop Ave.
Harvey
Peoria
206 West Camp St.

INDIANA
Elkhart
225 Collins Rd.
Evansville
520 N. Congress Ave
Fort Wayne
7603 Nelson Road
Indianapolis
310 So. Kitley Ave.

KANSAS
Wichita
5755 S. Hoover

KENTUCKY
Louisville
4820 Allmond Ave.

LOUISIANA
Lafayette
Evangeline Thruway, S.
New Orleans
7500 Almonaster Ave.
Shreveport
Mansfield Road at
Valley View
P.O. Box 8267

MAINE
Portland
508 Warren Ave.

MARYLAND
Baltimore
6813 Quad Ave.

MASSACHUSETTS
Boston
60 Kendrick St.
Needham Heights

MICHIGAN
Grand Rapids
825 Buchanan Ave., S.W.
Detroit
126 East Hudson St.
Royal Oak

MINNESOTA
Minneapolis
3101 East Hennepin Ave

MISSISSIPPI
Jackson
555 Gulf Line Rd.

MISSOURI
St. Louis
6025 Byassee Dr.
Hazelwood
Kansas City
1445 Taney St.
N. Kansas City

MONTANA
Billings
600 Daniel St.
Great Falls
901 River Drive South

NEBRASKA
Lincoln
545 "L" St.

NEW HAMPSHIRE
Manchester
300 Gay St.

NEW JERSEY
Clifton
400 Allwood Rd.

NEW MEXICO
Albuquerque
4021 Edith Blvd., N.E.

NEW YORK
Albany
Brown & Industrial Roads
Buffalo
2585 Walden Ave.
Rochester
1460 E. Henrietta Rd.
Long Island
175 Underhill Blvd.
Syosset
Syracuse
Midler Park Dr.
Syracuse
Yonkers
75 Tuckahoe Rd.

NORTH CAROLINA
Charlotte
3300 Parkside Rd.
Greensboro
2704 Patterson Dr.
Raleigh
3501 Tarheel Drive
Wilmington
P.O. Drawer 250
Leland

OHIO
Akron
2644 Gilchrist Rd.
Cincinnati
5402 Vine St.
Cleveland
19100 Holland Rd
Columbus
2100 Refugee Rd.
Dayton
4395 Springfield St.
Toledo
2815 Hill Ave.

OKLAHOMA
Oklahoma City
5519 N.W. Fourth St.
Tulsa
8531 East 44th

OREGON
Eugene
885 McKinley St.
Portland
330 S.E. Division Pl

PENNSYLVANIA
Lancaster
549 W. Roseville Rd
Pittsburgh
Hunker Rd. & Rt. 119
New Stanton
Philadelphia
801 First Ave.
King of Prussia
St. Clair
P.O. Box 37

RHODE ISLAND
Providence
170 Jefferson Blvd.
Warwick

SOUTH CAROLINA
Columbia
Corner Brookwood Dr. &
Duval St.
Greenville
Haywood Rd.

TENNESSEE
Bristol
100 Paty Industrial Blvd.
Chattanooga
201 East 28th St.
Knoxville
1301 Mitchell St., N.E.
Memphis
2057 Kellogg Ave.
Nashville
331 28th Avenue N.

TEXAS
Dallas
1800 John Connally Dr.
Carrollton
El Paso
6990 Market St.
Fort Worth
400 East Vickery Blvd.
Houston
650 Gellhorn Dr.
Lubbock
702 E. 44th St.
San Antonio
535 No. W. W. White Rd.

UTAH
Salt Lake City
2875 South Second, West

VIRGINIA
Lynchburg
Groves Mill Rd. at
Timberlake Rd.
Norfolk
3587 Argonne Ave.
Richmond
Corner Dabney &
Bethlehem Rds.

WASHINGTON
Seattle
12815 N.E. 178th St.
Woodinville
Spokane
4320 E. Trent Ave.
Tacoma
2302 Ross Way

WASHINGTON, D.C.
8121 Ardmore-Ardwick Rd.
Landover, Md.

WISCONSIN
Milwaukee
5059 N. 119th St.

GYPSUM SALES OFFICES

CALIFORNIA
Los Angeles—213/968-5551

DELAWARE
Wilmington—302/658/7221

GEORGIA
Atlanta—404/873-6351

ILLINOIS
Chicago—312/678-2273

KANSAS
Kansas City—816/842-3366

MICHIGAN
Detroit—313/564-4806

TEXAS
Dallas—214/242-4261

WASHINGTON
Woodinville—206/486-9148

WASHINGTON, D.C.
Landover, Md.—301/773-3320

We Support These Associations

AMERICAN PLYWOOD ASSOCIATION

GYPSUM ASSOCIATION

MEMBER NHCC NAHB NATIONAL HOUSING CENTER COUNCIL

NKCA

PRODUCERS' COUNCIL

SGP 0025520

GeorgiaPacific
GROWING FORESTS FOREVER

Lithographed in U.S.A. on G-P Kalamazoo Coronet enamel 70 lb.