TABLE 1. FIRST STORY WARM AIR DUCTS[a]

Warm Air Combination No.	Throat Size	Leader Pipe Diameter, Inches	Pipe Area Sq In	Register Size, Inches		
				Baseboard		Floor
				Size	Extension	
1	6⅛ x 10	8	50	10 x 8	2¼	8 x 10
2	6⅛ x 12	9	64	12 x 8	2¼	9 x 12
3	7⅛ x 12	10	78	12 x 9	3¼	10 x 12
4	9⅛ x 13	12	113	13 x 11	5¼	12 x 14
3d[b]	8⅝ x 12	10	78	2(12 x 8)	2¼	....
4d[b]	10⅝ x 12	12	113	2(12 x 9)	3¼	....

[a] When the calculations indicate a requirement for a given room greater than Combination No. 4, two or more smaller units totalling the required capacity are recommended.
[b] Double headers are permissible only where full throat areas are obtainable and room privacy is not essential. Use combination number representing total load. Combinations 3d and 4d have same capacities in Table 6 as combination 3 and 4 respectively.

TABLE 2. SECOND STORY WARM AIR DUCTS—SINGLE WALL STACKS AND FITTINGS

Combination No.	Stack, Size, Inches	Leader Pipe Diameter, Inches	Pipe Area Sq In	Register Size, Inchee			
				Baseboard		Floor	Sidewall
				Size	Extension		
11	10 x 3¼	8	50	10 x 8	2¼	8 x 10	10 x 8
12	12 x 3¼	9	64	12 x 8	2¼	9 x 12	12 x 8
14	14 x 3¼	10	78	13 x 11	2¼	....	12 x 8
15	12 x 5¼	12	113	12 x 9	3¼	....	....
16	14 x 5¼	12	113	13 x 11	5¼	....	....
12d[b]	12 x 3¼	9	64	2(12 x 8)	2¼	.....	2(12 x 8)
14d[b]	14 x 3¼	10	78	2(12 x 8)	2¼	....	2(12 x 8)

[a] Recommended stack sizes. Tables may also be applied to 3 in. and 3 1/2 in. stack depths.
[b] Combinations 12-d and 14-d have same capacities in Table 7 as combinations 12 and 14 respectively.

TABLE 3. SECOND STORY WARM AIR DUCTS—DOUBLE WALL STACKS AND FITTINGS

Combination No.	Leader Pipe Diameter, In.	Pipe Area Sq In.	Stack Size, In.		Register Size, In.			
			Internal	External	Floor	Baseboard		Sidewall
						Size	Extension	
21	8	50	2½[a] x 10	3⅛[a] x 10⅝	8 x 10	10 x 8	2¼	10 x 8
22	8	50	3 x 10	3⅝ x 10⅝	8 x 10	10 x 8	2¼	10 x 8
23	9	64	2½[a] x 12	3⅛[a] x 12⅝	9 x 12	12 x 8	2¼	12 x 8
24	9	64	3 x 12	3⅝ x 12⅝	9 x 12	12 x 8	2¼	12 x 8

[a] Commercial sizes vary 1/8 in. from values shown.

all correlated. Similarly in the case of return ducts, the selection specifies a complete unit consisting of return grille, return duct, and shoe connection.

Recommended Standard Sizes

For the purpose of simplification and standardization, selected combinations of commercial sizes of warm air pipes, return air pipes, ducts, grilles, fittings, and registers are designated as Combination Numbers. The numbers assigned and the combinations selected as standard are listed in the following Tables 1 to 4 inclusive.[3]

The selected types of fittings are shown in Fig. 2, and their resistances ex-

TABLE 4. RETURN AIR DUCTS

Combination No.	Duct Dia. In.	Duct Area Sq. In.	When Joist Space Is Used[a]		Metal Grille Sizes			Baseboard Intake for First Story	Area at Shoe Connection, Sq. In.	When Duct Is Used
			No. of Joists Lined	Min.[b] Depth In.	Choose One					Choose One
					A	B	C			
31	10	78	1	7		8 x 14	10 x 12			14 x 6 12 x 8
32	12	113	1 or 2	9 5	6 x 30	8 x 24	12 x 14	14 x 10 4-In. Ext.		22 x 6 16 x 8
33	14	154	1 or 2	12 6	8 x 30	10 x 24	14 x 16		170	28 x 6 22 x 8
34	16	201	1 or 2	16 8	10 x 30	12 x 24			220	28 x 8 22 x 10
35	18	254	2	10	12 x 30	14 x 24		30 x 10 4-In. Ext.	280	36 x 8 28 x 10
36	20	314	2	12.5	14 x 30	18 x 24			340	36 x 10 30 x 12
37	22	380	2	15.0	18 x 30				420	42 x 10 36 x 12
38	24	452	2	18.0	20 x 30				500	42 x 12 36 x 14

[a] Based on 14 in. space between joists.
[b] Use full depth of joist except when joist depth is less than minimum depth required, *when pan must be used.*

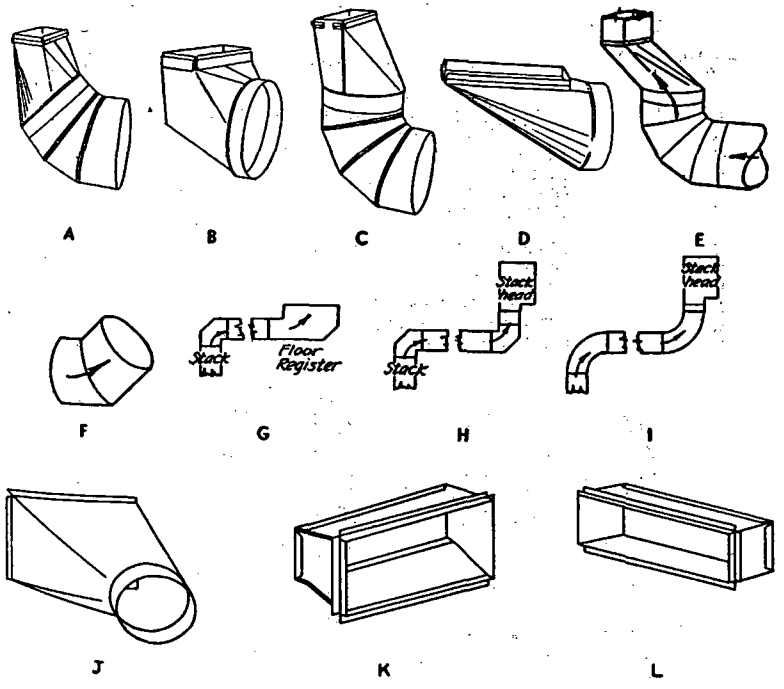

FIG. 2. TYPICAL WARM AIR BOOTS