TABLE 7. WARM AIR CAPACITY, BTUH DELIVERED SECOND STORY REGISTERS

Combination No.	No. of Elbows	Height from basement floor to bottom of joists—Feet →	Actual Length (Bonnet to Boot) Feet										
		6				4	6	8	10	12	14	16	18
		6½			4	6	8	10	12	14	16	18	20
		7		4	6	8	10	12	14	16	18	20	22
		7½	4	6	8	10	12	14	16	18	20	22	24
11 or 22			8,370	8,140	7,900	7,670	7,430	7,190	6,950	6,710	6,470	6,240	6,000
12 or 24			10,040	9,760	9,470	9,190	8,900	8,620	8,330	8,050	7,770	7,480	7,200
14			11,710	11,380	11,050	10,720	10,390	10,060	9,720	9,390	9,060	8,730	8,400
15			16,200	15,750	15,300	14,840	14,380	13,920	13,460	13,000	12,550	12,100	11,640
11 or 22			7,940	7,720	7,500	7,280	7,050	6,830	6,600	6,370	6,150	5,930	5,700
12 or 24			9,540	9,270	9,000	8,730	8,460	8,190	7,920	7,650	7,380	7,110	6,840
14			11,120	10,810	10,500	10,180	9,870	9,550	9,230	8,920	8,610	8,290	7,980
15			15,400	14,970	14,530	14,100	13,670	13,230	12,800	12,360	11,930	11,500	11,070
11 or 22			7,530	7,320	7,110	6,900	6,680	6,470	6,250	6,040	5,830	5,620	5,400
12 or 24			9,030	8,780	8,520	8,270	8,010	7,750	7,500	7,240	6,990	6,730	6,470
14	3		10,530	10,240	9,940	9,650	9,350	9,050	8,750	8,450	8,160	7,860	7,560
15			14,580	14,180	13,780	13,370	12,950	12,530	12,120	11,710	11,300	10,890	10,480
11 or 22			7,120	6,920	6,720	6,520	6,310	6,110	5,900	5,700	5,500	5,300	5,100
12 or 24			8,530	8,290	8,050	7,810	7,570	7,330	7,080	6,840	6,600	6,360	6,120
14	4		9,950	9,670	9,390	9,110	8,830	8,550	8,260	7,980	7,700	7,420	7,140
15			13,780	13,390	13,000	12,610	12,220	11,830	11,440	11,050	10,670	10,280	9,890
11 or 22			6,700	6,510	6,320	6,130	5,940	5,750	5,560	5,370	5,180	4,990	4,800
12 or 24			8,040	7,810	7,580	7,350	7,130	6,900	6,670	6,440	6,220	5,990	5,760
14	5		9,370	9,110	8,850	8,580	8,310	8,050	7,780	7,510	7,250	6,980	6,720
15			12,970	12,600	12,240	11,870	11,500	11,140	10,770	10,400	10,040	9,680	9,310

Notes: When floor registers are used on second story rooms, include the equivalent elbow resistance for the cross-over connection as shown in Fig. 2.

Combination Numbers 21 and 23 as shown in Tables 2 and 3 are composed of narrow stacks for narrow stud spaces.

For Combination No. 21, the capacities are the Btuh deliveries shown for Combination Nos. 11 or 22 multiplied by 0.83.

For Combination No. 23, the capacities are the Btuh deliveries shown for Combination Nos. 12 or 24 multiplied by 0.83.

TABLE 8. RETURN AIR—CARRYING CAPACITY—BTUH SERVICED

Return Air Combination No.	Duct Diam. In.	Type A BTUH	Types B and C BTUH	Type D BTUH	Type E BTUH	Type F BTUH	Return Air Combination No.
31	10	11,300	9,500	7,800	7,800	5,000	31
32	12	16,300	13,700	11,300	11,300	7,200	32
33	14	22,200	18,700	15,300	15,300	9,800	33
34	16	29,000	24,400	20,000	20,000	12,800	34
35	18	36,700	30,800	25,300	25,300	16,200	35
36	20	45,300	38,000	31,300	31,300	20,000	36
37	22	54,800	46,000	37,800	37,800	24,100	37
38	24	65,200	54,800	45,000	45,000	28,700	38

4. Show the number and proposed locations of return air grilles and the type of return-air system (see Fig. 5).

5. From Table 6, for first story, or from Table 7 for second story, select the combination number for the warm air system which will supply the heat required to each room, with the number of elbows and length of leader pipe previously determined. Then, using the combination number as found, read directly in Tables 1, 2, or 3 the leader, stack, and register sizes required.

6. From Table 8 select the combination number for the return air system to correspond with the Btu per hour serviced and the type of return air system. Then from Table 4 select the duct and grille sizes, etc., corresponding to this number.

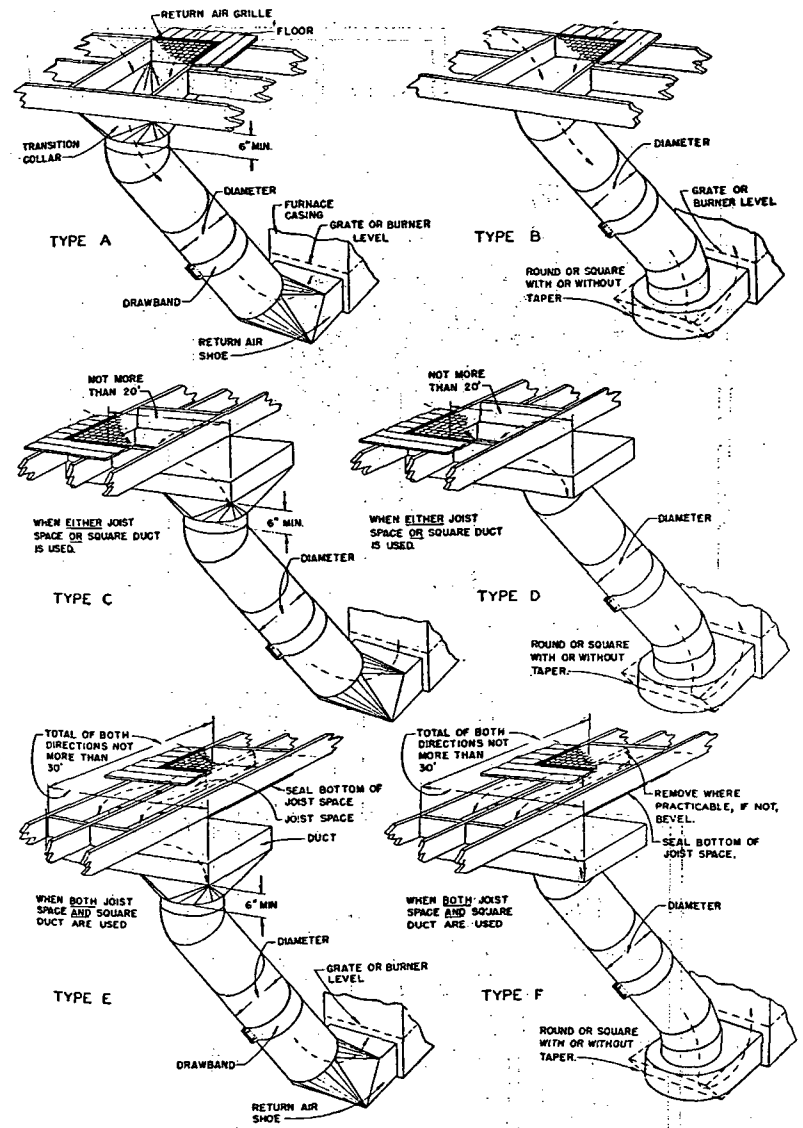

Note: For Types C, D, E, and F return-air systems, reduce the carrying capacities shown in Table 8 by 1 percent for each 4 ft additional length in the horizontal run.

FIG. 5. TYPICAL ARRANGEMENTS OF RETURN-AIR DUCT SYSTEMS

7. Select a furnace having a bonnet output, in Btu per hour, one-third greater than the heat loss from the structure, to compensate for duct heat loss.