PROGRESS REPORT
TECHNICAL SERVICES DEPT. – W. G. KRUMMRICH PLANT

JOB NO.	REPORT NO.	DATE
91370:4129	2-Final	7 ,21 ,70

W.G. KRUMMRICH PLANT			GENERAL OFFICE	OTHERS
☒ G.L. Bratsch	*☒ O.W. Siebert	*☒ Del. River	•☒ M.P. Lux	*☒ R. L. Wiese (IFO)
☒ T.W. Dalton	*☒ R.L. Nettesheim	*☒ J.F. Winkler	•☒ H.C. Carder	•☒ W. R. KELLOGG (NITRO)
•☒ D.W. Jackson	*☒ N.E. Thompson	*☒	•☒ D. Danna (4)	•☒ J.C. Landwehr/ K.G. Hale (ANNISTON)
•☐ A.E. Leisy	*☒ J.J. Luecken	*☒	•☐ P.W. Edwards	•☐ So. 2nd St.
•☐ E.D. Malone	*☒ R.R. Sorrell	*☒	•☒ D.B. Hosmer/ F.J. Holzapfel	•☒ P.O. DeGarmo
*☐ J.W. Molloy	*☒	*☒		*☒ T.M. Patrick
☒ D.J. O'Toole	*☒	*☒	•☒ R.E. Howard	*☒ J.F. Quinn
*☒ D.E. Woods	*☒	*☒	•☐ W.A. Kuhn	*☒ M.A. Terpstra
•☒ R.M. McCutchan	*☒	*☐	•☐ J.A. Morgan	*☒
•☒ C.F. Buckley	*☒	*☐	*☒ W.R. Richard	*☒

• TO RECEIVE DETAIL SECTION

TITLE: THERMAL DESTRUCTION UNIT DESIGN (STATUS)

PERSONNEL: W. C. Schrichte (T. E. Greenman)

PROBLEM: To develop a design based on lab data for a unit to thermally destroy organic contaminants in HCl off gas.

SUMMARY

Overall HCl recovery at W.G.K. has been in the 75-80% range over the past three years. In the fall of 1969 both using departments, muriatic acid (Dept. 218) and chlorosulfonic acid (Dept. 217), were in sold out positions. To improve the overall recovery, P.R. & D. developed two processes for thermally destroying organic contaminants in the HCl off gas. The process of passing the contaminated HCl gas through a molten salt bath was selected as the more efficient of the two. The organic free HCl gas could be used by both using departments and possibly eliminate carbon treatment in Dept. 218.

An article entitled "Designing Gas-Sparged Reactors" (Chemical Engineering, 7/3/67, 7/17/67) by Dr. J. R. Fair (C.E.D.) contained most of the design equations used. Consultation with Dr. Fair and members of his group shed light on some of the problems associated with this idea (0.3 ft/sec maximum superficial velocity, gold, platinum or ceramic as materials of construction, and heat transfer rate to an HCl bubble rising freely in the molten salt bath-bath depth). The method of heating the bath, required bath depth, cross sectional configuration, and grade of ceramic will have to be determined by a pilot unit which has been estimated to cost $2825.00. Other variables requiring more thorough investigations are free chlorine, need for a heat exchanger, and need for a booster blower.

A decision to discontinue this work was based on the amount of research still required and the decision to not recover Dept. 246 gas in muriatic acid. The total cost (based on man-hours) thus far is $21,970.00 ($5470-TSD charges, $16,500 PR&D charges). Since we already have the technology for adiabatic absorption, it was selected as an alternate to be evaluated.

DSW 299111

COMPANY CONFIDENTIAL INFORMATION

This document is the property of Monsanto Company and the recipient is responsible for its safekeeping and disposition. It contains confidential information of Monsanto Company which must not be reproduced, revealed to unauthorized persons or sent outside the company without proper authorization. Either retain in secure files or destroy.

FORM WGK 800 REV-2/66

CONCLUSIONS:

1) Thermal destruction of organics in HCl off gas appears to be feasible, however, considerable research is still required.

2) Carbon usage would be reduced.

3) Capital operating and maintenance costs could conceivably balance the savings.

RECOMMENDATIONS:

1) No further work be done on this project at this time.

2) This job be closed.

3) Evaluate adiabatic absorption as an alternate.

W. C. Schrichte
Technical Services Department

/tm

DSW 299112

I. BACKGROUND

A. HCl RECOVERY

HCl off gas generated by hydrocarbon chlorination in Departments 233 (Chlorobenzenes), 246 (Aroclors) and 236-237 (Chlorophenols); historically has been recovered for use in the production of muriatic acid (Dept. 218) and chlorosulfonic acid (Dept. 217). In the past, normal distribution of the off gas to be recovered called for:

1) Dept. 233 off gas to be used only in Dept. 218 due to color problems associated with its use in Dept. 217.

2) Depts. 236-237 off gas to be used only in Dept. 217 due to odor problems associated with its use in Dept. 218.

3) Dept. 246 off gas to be used to maintain a constant flow to the continuous units in Dept. 217 with the excess being used in Dept. 218.

This distribution is effected by a sophisticated distribution system (See Figure I). The overall HCl off gas recovery for the three generating departments has been in the 75-80% range over the past three years.

Other HCl off gas generators in the plant, whose off gas is not recovered but sewered instead, are Departments 238 (Benzyl Chloride), 265 (Chloroacetyl Chloride) and 248 (Phosphate Esters).

B. SALES OPPORTUNITIES

Increased demand for muriatic acid has been due, almost exclusively, to the steel mills converting from sulfuric acid to muriatic acid in their pickling process. The potential sales of muriatic acid in the area best supplied by WGK is 75 M lbs/year HCl 100% basis (memo from G.W. Buhrmann to C. B. Sigler, 2/20/68). The sales forecast is simply the expected availability of muriatic acid from WGK (memo from GWB to H. C. Carder, 11/5/68).

The design capacity of the muriatic acid facilities is 9,000 lbs/hour of HCl gas flow rate. Production supervision and TSD agree that the success factor is at least 50%, that Dept. 218 capabilities can be demonstrated at 11,000 lbs/hr. or the potential capacity level of 70 M lbs/year. (See Muriatic Acid M.I.P. issued May, 1969.)

FIGURE 1

HCl OFF GAS DISTRIBUTION SYSTEM

Control Valve #1 prohibits Dept. 233 HCl off gas from flowing to Dept. 217.
Control Valve #2 controls flow to Dept. 217 by differential pressure.
Control Valve #3 automatically sewers any excess 236-7 HCl gas.

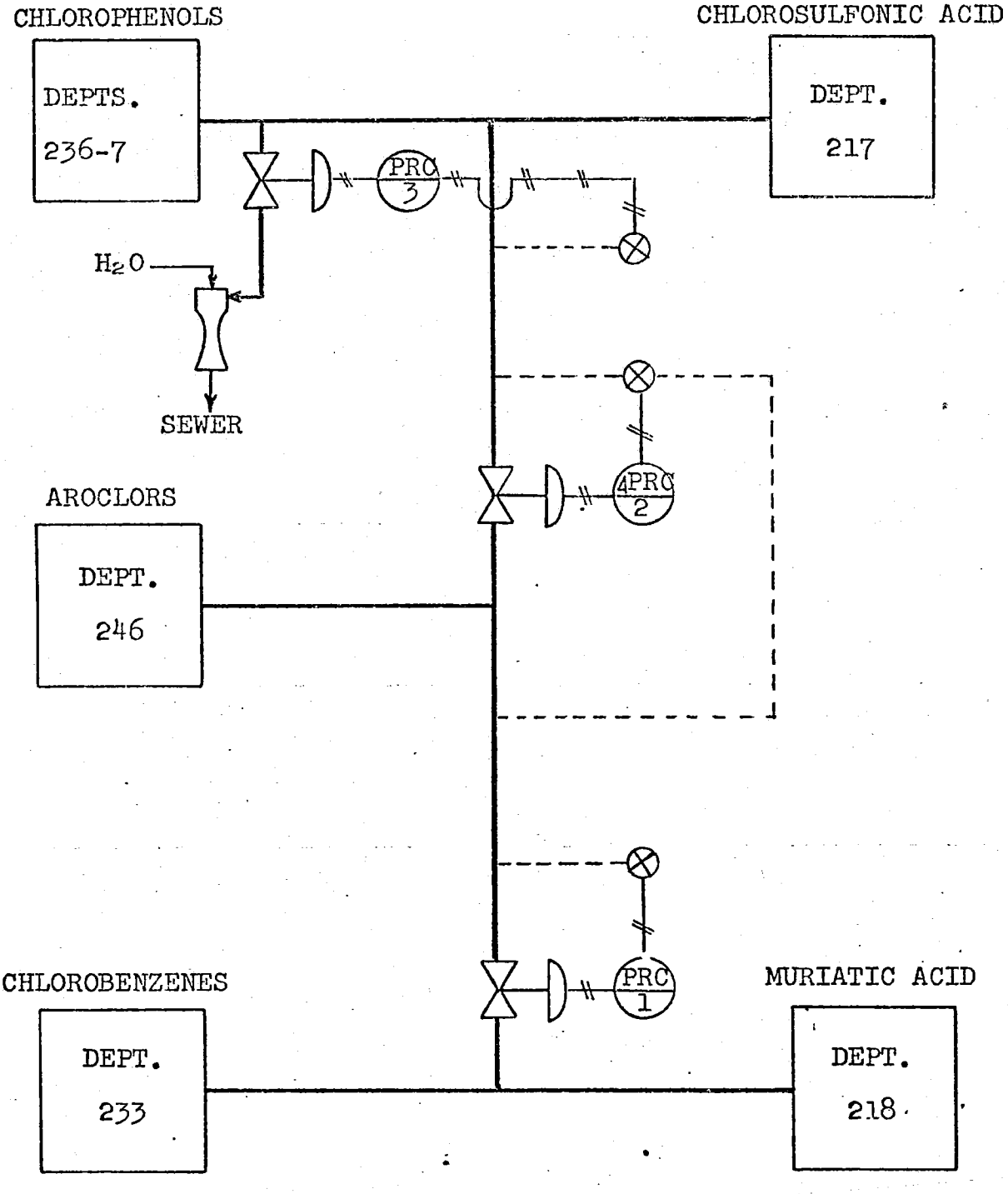

DSW 299114

STLCOPCB4069026

I. BACKGROUND

B. SALES OPPORTUNITIES (Continued)

The sold out position experienced last fall by Dept. 217 was due primarily to production difficulties being experienced by our chlorosulfonic acid competitors. Of the three producers of chlorosulfonic acid in the U.S., Tennessee Corp. was having labor problems and DuPont was having process problems. Even without Tennessee Corp. and DuPont problems, chlorosulfonic acid production would have fallen short of schedule under normal operations. Also, during this sold out position period Dept. 236-237 was taking a two month inventory shut-down. A plant test using Dept. 233 HCl off gas in Dept. 217 was performed to counteract the shut-down. The chlorosulfonic acid produced in Dept. 217 using Dept. 233 HCl off gas had a color of 250-400 Alpha compared to a spec of 60 Alpha. This acid produced during the test was acceptable for use in Queeny's multiple processes. Having a higher net return gave Dept. 217 the priority over Dept. 218 for Dept. 233's HCl off gas, which shut Dept. 218 down while Dept. 217 built inventory for Queeny.

It was thought that if a unit could be developed which would render an HCl off gas free of organic impurities, then HCl off gas streams from other generating Depts. (Benzyl Chloride, Chloroacetyl Chloride and Phosphate Esters) could also be recovered. Such a unit would also eliminate the distribution restrictions, increase percentage recovery and provide the needed HCl gas to meet demands.

C. P.R. & D. INVESTIGATION

P.R. & D. developed a method which would remove essentially all the organic impurities from HCl off gas. Their investigation was undertaken on the assumption that the following reaction:

$$HCl + \text{Organics} + \text{Air} \xrightarrow[\text{Temp}]{\text{High}} HCl + CO_2 + H_2O + Cl_2$$

could be carried out by passing mixtures of gaseous HCl and organic contaminants and air through a tube furnace at high temperatures without any appreciable oxidation of the HCl to chlorine. The results indicated that hydrogen chloride gas containing various organics in concentrations up to several thousands parts per million could be purified by thermally destroying the organic contaminants. At a temperature above

STLCOPCB4069027

I. BACKGROUND

C. P.R. & D. INVESTIGATION (Continued)

800°C and in the presence of air, the HCl quality was not appreciably affected. (See PR&D Report 91370:4022 (1) by N. Thompson 2/17/69.) The above investigation was very similar to that done by a Mr. Sudhoff in 1930, whose work was abstracted in an old memo (memo from J.R. Donovan to F.J. Holzapfel, 9/19/50) found in our files recently. (See Appendix I for attached copy.)

Additional testing in the plant using HCl off gas from the Chlorophenol Department (Dept. 236-237) supported the lab results and gave a muriatic acid free of chlorophenol or other organic contaminants. (See PR&D Report 91370:4022 (2) by N. Thompson, 7/2/69.)

The tube furnace idea was abandoned because of the tube length required to retain the desired volume of throughput. A second method developed by P.R. & D. was to pass the impure HCl off gas through a molten salt bath. This was accomplished by passing a combined HCl - Air feed through a mixture of molten $NaCl-CaCl_2$ at 800-900°C. Water white, organic free muriatic acid was made from HCl gas containing 0.5% chlorophenol contaminants. HCl gas containing Aroclor condensate also produced organic free acid.

The efficiency of the method depends on four variables. They are:

1) % organics in HCl gas
2) temperature
3) retention time
4) % air in feed stream.

The major by-product of the process was oxidation of HCl to chlorine. The conversion was about 2% and depended largely on the above variables.

The combustion approach was attractive because it was continuous and produced no waste effluents; $NaCl-CaCl_2$ are cheap materials; simplicity of process. The major disadvantages are full cost and materials of construction for the system. (See PR&D Report 91370:4022 (3) by N. Thompson, 3/4/70.)

STLCOPCB4069028

II. BASIC DESIGN EFFORT

Both methods developed in the lab gave the same desired end result, a clear water white muriatic acid essentially free of organic contaminants. The major difference between the two methods was the heat transfer media. The molten salt bath heated the HCl gas to the desired temperature (800-900°C) much faster than the air did; thus, a shorter residence time was experienced using the molten salt bath method.

The method of sparging the impure HCl off gas through a molten salt bath brought to mind an article written by Dr. J. R. Fair of our Central Engineering Department. The article entitled "Designing Gas-Sparged Reactors" appeared in Chemical Engineering issues of July 3 and July 17, 1967. Although the article dealt with designing reactors for a gas-liquid reaction, most of the principles presented in it were applicable to our case. Since the salt was inert toward the gas, the equations for mass transfer, axial mixing and reaction kinetics were not applicable. The equation used for determining the average residence time for the gas in the expanded liquid (molten salt) was:

$$\bar{\theta}_G = \int_0^{Z_f} \frac{\epsilon \, dZ}{U_{OG}} \qquad (1)$$

where

U_{OG} = superficial gas velocity

dZ = the change liquid height

ϵ = fractional gas hold-up

Z_f = the expanded (aeriated) liquid height

The integrated form of (1) was:

$$\bar{\theta}_G = \epsilon \, Z_f / U_{OG} \qquad (2)$$

DSW 299117

STLCOPCB4069029

II. BASIC DESIGN EFFORT (Continued)

The fractional gas hold-up was determined from the following graph:

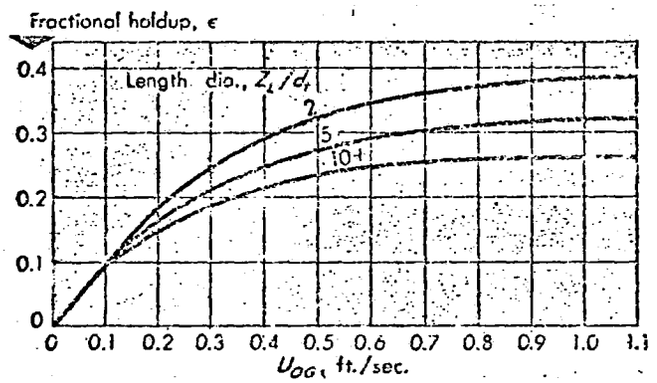

DYNAMIC GAS HOLDUP in gas-sparged reactors—Fig. 3

The aeriated liquid height was determined by:

$$\epsilon = \frac{(Z_f - Z_L)}{Z_f} \qquad (3)$$

which rearranged is:

$$Z_f = \frac{Z_L}{1 - \epsilon} \qquad (4)$$

where, Z_L = quiet liquid height

d_t = vessel diameter

DSW 299118

II. BASIC DESIGN EFFORT (Continued)

Dr. Fair recommended during consultation that from his past experience, superficial gas velocities above 0.3 ft/sec. should not be considered. This was because entrainment gets progressively worse as the superficial gas velocity is increased. Using the preceeding equations, the lab data presented by Neil Thompson in Report No. 91370:4022 (3) was transformed into engineering units and the superficial gas velocities and the average residence time were calculated for each run (Table I). Run number 13a had a superficial gas velocity of 0.511 ft/sec which resulted in a plugged reactor (both vessels). Thus, Dr. Fair's recommendation not to exceed 0.3 ft/sec. was applicable in our case.

R. B. Puyear, a corrosion specialist in Dr. Fair's group, did a literature search to determine what metals would be resistant to HCl at temperatures of 800 to 850°C. He found that an article by Brown, DeLong and Auld ("Corrosion by Chlorine and by Hydrogen Chloride at High Temperatures", Industrial and Engineering Chemistry, July 1947, p. 839-844) was the most complete study available. The data (Table II) indicates gold and platinum to be the only metallic materials resistant to HCl at temperatures from 800-850°C. Mr. Puyear indicated ceramics would also be resistant and are probably the best candidates for our application. Ceramics were used for the lab runs and were found to work very well.

Dr. C. W. Rodehorst, a specialist in Dr. Fair's group, calculated the maximum heat transfer obtainable for a gas bubble passing upward through the molten salt bath. He found that under ideal conditions the bubble essentially approached the bath temperature in the first inch of rise. He concluded that even with moderate effects (e.g. local cooling in the bath and bubble cloud effects) it would seem very probable the gas bubble would reach the bath temperature of 850°C in a travel distance of less than 6 inches. This indicates a very shallow bath depth would be required in a unit for thermally destroying organic contaminants in HCl off gas.

Next to be considered was the problem of heating the bath to the desired temperature. Internal direct flame heating was ruled out because of the introduction of large amounts of products of combustion which would lower the efficiency of the absorbers.

DSW 299119

STLCOPCB4069031

TABLE I

LAB RUNS

Run No.	(cfm x 10^{-3})	Superficial Vel. (ft/sec)	Avg. Residence Time (sec)
1	7.074	0.150	0.50
2	5.297	0.112	0.50
3	10.593	0.223	0.46
4	15.890	0.335	0.42
5	17.890	0.335	0.40
6	8.828	0.186	0.48
7	7.062	0.150	0.50
8	7.768	0.164	0.49
9	12.360	0.261	0.48
*			
10	4.414	0.102	0.48
11	8.828	0.204	0.50
12	13.240	0.307	0.44
13	17.655	0.409	0.38
13a	22.070	0.511	0.34
14	4.060	0.094	0.46
15	8.121	0.188	0.51
16	12.170	0.282	0.41
17	16.243	0.376	0.42
Ac 4**	8.828	0.204	0.47
Ac 5	8.121	0.188	0.51
Ac 6	13.240	0.312	0.45

* Temperature for runs 1 thru 9 = 750°C; temperature for the rest = 850°C.

** Run Ac 4 thru Ac 6 was with Aroclor contaminant; the rest were with chlorophenols.

DSW 299120

TABLE II

CORROSION IN DRY HYDROGEN CHLORIDE

Metal	Suggested Upper Temp. Limit for Continuous Service (°F)
Platinum	2200
Gold	1600
Nickel	950
Inconel	900
Hastelloy B	850
S HA - 1	850
Hastelloy C	850
Hastelloy A	800
Hastelloy D	800
18-8-Mo	800
25-12-Cb	800
18-8	750
Carbon Steel	500
Ni-Resist. (Type 1)	500
Monel	450
Silver	450
Cast Iron	400
Durichlor	350
Duriron	350
Copper	200

DSW 299121

STLCOPCB4069033

II. BASIC DESIGN EFFORT (Continued)

External direct flame heating was ruled out because the temperatures required to heat the bath would exceed the temperature at which all the common and most of the exotic materials of construction available would be weakened beyond their ability to support a load. Inductive heating was ruled out because a magnetic material is needed and ceramics are not magnetic. Electrical resistance heating, as was used in the lab, appears to be the best way to go and also may be the more expensive. Internal indirect heating could be accomplished by inserting electrical resistance heating elements in ceramic fingers extending into the interior of the vessel. The heating elements inserted in the fingers would have the advantages of the ceramic wall of the vessel serving to insulate and easy access for maintenance to be performed on them from outside the vessel.

All of the items mentioned above strongly indicate the need for more research effort to determine:

1) What grade of ceramic would be best for this application?

2) What bath depth would be required to insure complete destruction of the organics?

3) What the heat load requirement would be once (1) and (2) have been determined.

A pilot unit (see sketch, Appendix II) for determining (2), (3) and one grade of ceramic was quoted by McDaniel Refractory Porcelain Company to cost $2,825.00. McDaniel also recommended we contact A.P. Green Company for any large scale equipment. A.P. Green indicated a willingness to work with us on selecting the grade of ceramic as well as final design of a full scale unit.

Once the above has been determined, a full scale unit could be designed. The full scale unit would have to be designed to handle all the HCl off gas which is feasible to recover. The full scale unit would also have to meet the corresponding surface area required so that the maximum superficial gas velocity of 0.3 ft/sec is not exceeded. The surface area required to handle a flow of 17,650 lbs/hr HCl off gas (all the HCl off gas generated excluding Dept. 265's) would be 635 ft^2. This surface area corresponds to vessels having cross sectional diameters of 28.5 ft. for one unit, 20.2 ft. for two units and 9.0 ft. for ten units. For case of feeding only Dept. 236-237's HCl off gas, the flow would be 7,650 lbs/hr which would require a surface area of 274 ft^2. This surface corresponds to vessels with cross-sectional diameters of 18.7 ft. for one unit, 11.7 ft. for two units and 5.9 ft. for ten units.

STLCOPCB4069034

II. BASIC DESIGN EFFORT (Continued)

For the case of feeding only Dept. 246's HCl off gas the surface area and diameters are similar to those for Dept. 236-7, shown previously. Keeping in mind ceramic as the material of construction, the diameter for one unit is ridiculously large, yet on the other hand, the number of units needed with the smaller diameters becomes ridiculous also. A rectangular configuration would probably be the best approach to meet the surface area requirement.

Other variables needing more investigation are: (1) quantity of free chlorine produced by thermal destruction; (2) if a heat exchanger is needed on the exit gas; (3) if a booster is needed in the feed line. We have a specification of 1 ppm free chlorine on our finished acid.

A full scale layout based on the results to date would consist of a booster blower, an air mixing chamber, the thermal destruction unit (salt bath) and probably a heat exchanger. A cost estimate for a full scale unit has not been developed because of the many unknowns.

A decision to discontinue this effort was made based on the decision to not use Dept. 246 off gas in muriatic acid and the amount of research required to complete the project. The hours (Appendix III) spent on this project thus far total 2,197 which is approximately equal to $21,970. Since we already have the technology for adiabatic absorption, it was selected as an alternate to be evaluated.

III. CONCLUSIONS

1) Thermal destruction of organics in HCl off gas appears to be feasible, however, considerable research is still required.

2) Carbon usage would be reduced.

3) Capital operating and maintenance costs could conceivably balance the savings.

STLCOPCB4069035

IV. RECOMMENDATIONS

1) No further work be done on this project at this time.

2) This job be closed.

3) Evaluate adiabatic absorption as an alternate.

W. C. Schrichte
W. C. Schrichte
Technical Services
Department

/tm
Attachments:

DSW 299124

STLCOPCB4069036

MONSANTO CHEMICAL COMPANY

From: Monsanto, Illinois

Date: 9/19/50

cc: Mr. P.G. Marsh - St. Louis
Mr. J.F. Stickley
Mr. D.B. Hosmer
Mr. R.S. Wobus
Mr. J.R. Donovan

To: Mr. F. J. Holzapfel

At: Plant "B"

Subject: REMOVAL OF IMPURITIES FROM BY-PRODUCT HCl

It has been suggested that our by-product HCl could be cleansed of organic materials by an oxidation process in the gas phase. Although the proposal appears to be feasible and may have some possibilities, careful consideration reveals a number of serious disadvantages. In addition, an extended research effort would undoubtedly be necessary to fully develop such a process. I do not believe the Plant "B" Development Department is in a position to undertake this effort, and also question whether the possible savings or benefits would justify a major research program.

A small amount of laboratory work on such a process was carried out by Sudhoff in 1930. Three runs with various mixtures of air and HCl were made using a tube furnace at 800°C. The furnace was packed with silica pieces. In two runs the organics (chlorbenzene, etc.) partially decomposed to yield "cracked compounds of intense odor". In the third run, the volume of air was increased to 4 times the volume of HCl, with somewhat better results. However, even in this case odor was not substantially reduced below "regular 23% acid".

In considering what might be involved in any such process, it can be assumed that HCl gas would be mixed with air, pre-heated, and then passed over a granular catalyst bed. The effluent gases would then be partially cooled and absorbed in water as at present. The exact catalyst material and operating temperature cannot be fixed at this time, but some guesses can be made. From experience with oxidation of naphthalene over vanadium catalyst, it would appear that temperatures above 400°C will be required. This conclusion may also be reached from the observation that oxidation of traces of stearic acid in vanadium catalyst requires a large excess of air at +400°C. Since vanadium is one of the better oxidation promoters, higher temperatures would probably be required when using other catalysts.

The choice of catalyst for the proposed process appears to be a difficult one. Many substances, including vanadium, are either poisoned or volatilized by HCl at elevated temperatures. A large number of materials would undoubtedly have to be tested. In any event, the cost of catalyst would be an appreciable burden to the process.

DSW 299125

STLCOPCB4069037

The amount of steam and well water required for heating and cooling the gas stream is not excessive, the estimated cost of these services being $0.25 to $0.50 per ton of 100% HCl. A large and costly heat transfer surface would be required, however, to handle the gas volumes involved. A high cost is anticipated because of the corrosive nature of the service. This in turn results from the formation of water during the oxidation of hydrogen bearing materials, as well as from water introduced with combustion air. Drying facilities would no doubt be provided for the air, but can not be expected to operate at 100% efficiency.

To summarize; the proposed process appears feasible but requires considerable research. Some saving in raw material costs can be anticipated by discontinuing carbon treatment, but increased capital charges and maintenance appear to more than counterbalance this saving. In addition, absorption capacity would be reduced because of the air mixed with the HCl.

No further work is contemplated on this proposal unless you request it.

J. R. Donovan

J. R. Donovan

ep

DSW 299126

APPENDIX II

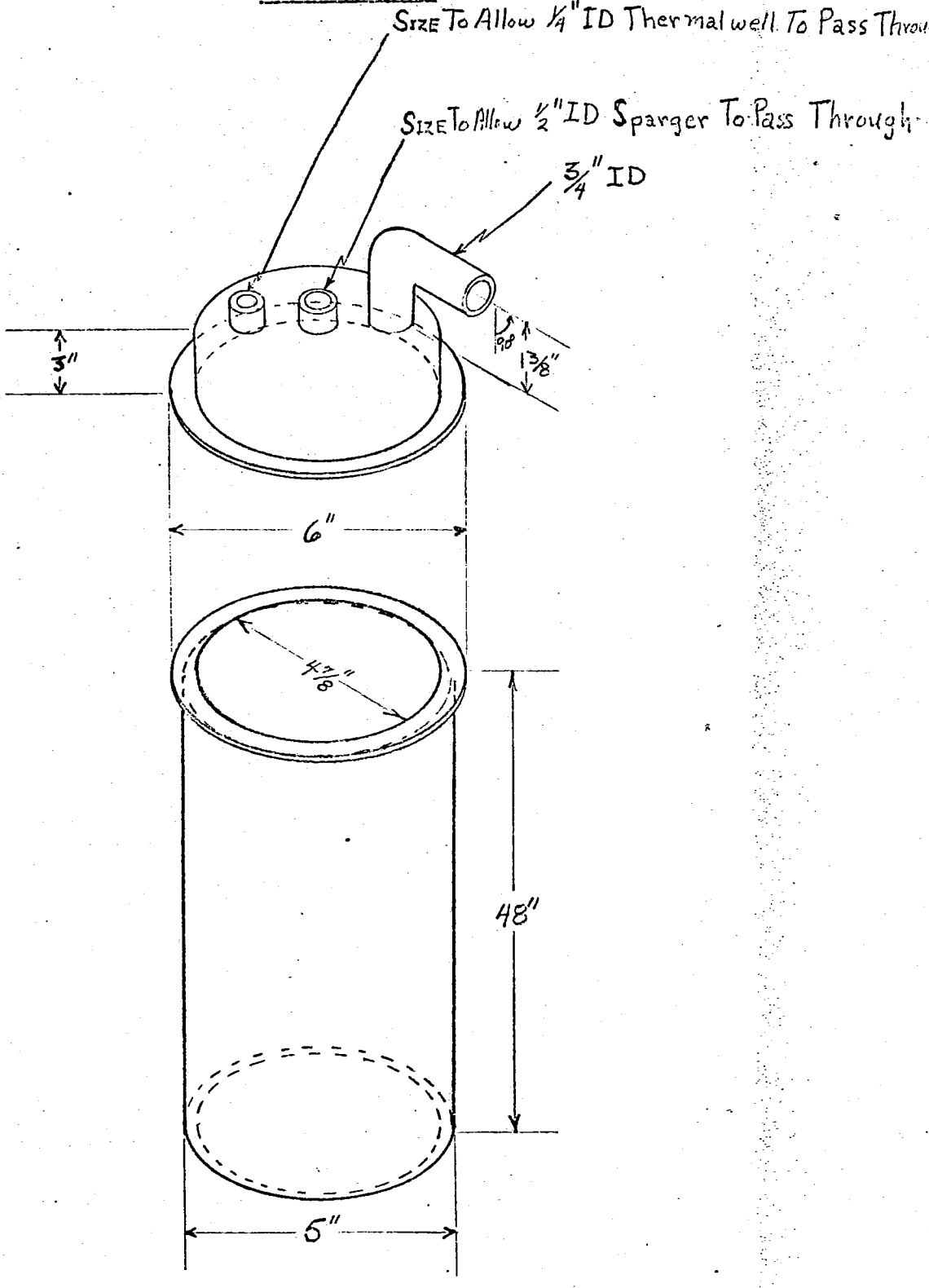

MONSANTO COMPANY

ORGANIC CHEMICALS DIVISION
MONSANTO, ILLINOIS

THIS DRAWING AND THE INFORMATION CONTAINED HEREON, IS CONFIDENTIAL AND IS THE PROPERTY OF MONSANTO COMPANY. IT IS LOANED WITH THE EXPRESSED AGREEMENT THAT IT WILL NOT BE REPRODUCED, COPIED, OR OTHERWISE DISPOSED OF, DIRECTLY OR INDIRECTLY, AND WILL NOT BE USED, IN WHOLE OR IN PART, TO FURNISH ANY INFORMATION FOR THE MAKING OF APPARATUS OR THE PRACTICING OF ANY PROCESS OR OTHERWISE WITHOUT WRITTEN PERMISSION OF MONSANTO COMPANY FIRST OBTAINED AND SPECIFIC AS TO EACH CASE. THE ACCEPTANCE OF THIS DRAWING WILL BE CONSTRUED AS AN ACCEPTANCE OF THE FOREGOING PROVISION.

	BY	DATE		BY	DATE
DRAWN	B. Schrichte	4/17/70	APP'D.		
CK'D.			APP'D.		
DSGN. APP'D.			APP'D.		

TITLE: Pilot TDU

DSW 299127

SCALE	JOB NO.	EST. NO.
NONE		

DEPT. No.	IDENTITY	DRAWING NUMBER	REV.
		TS-A-	

STLCOPCB4069039

APPENDIX II

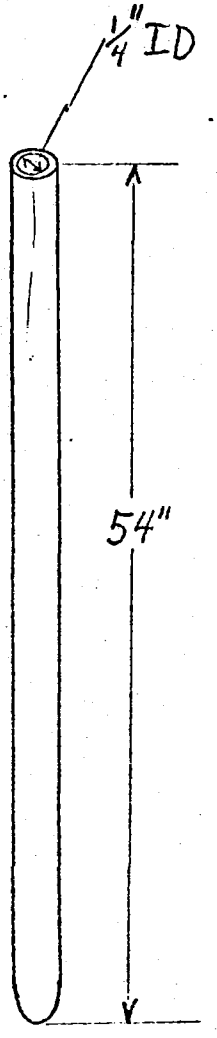

Thermalwell

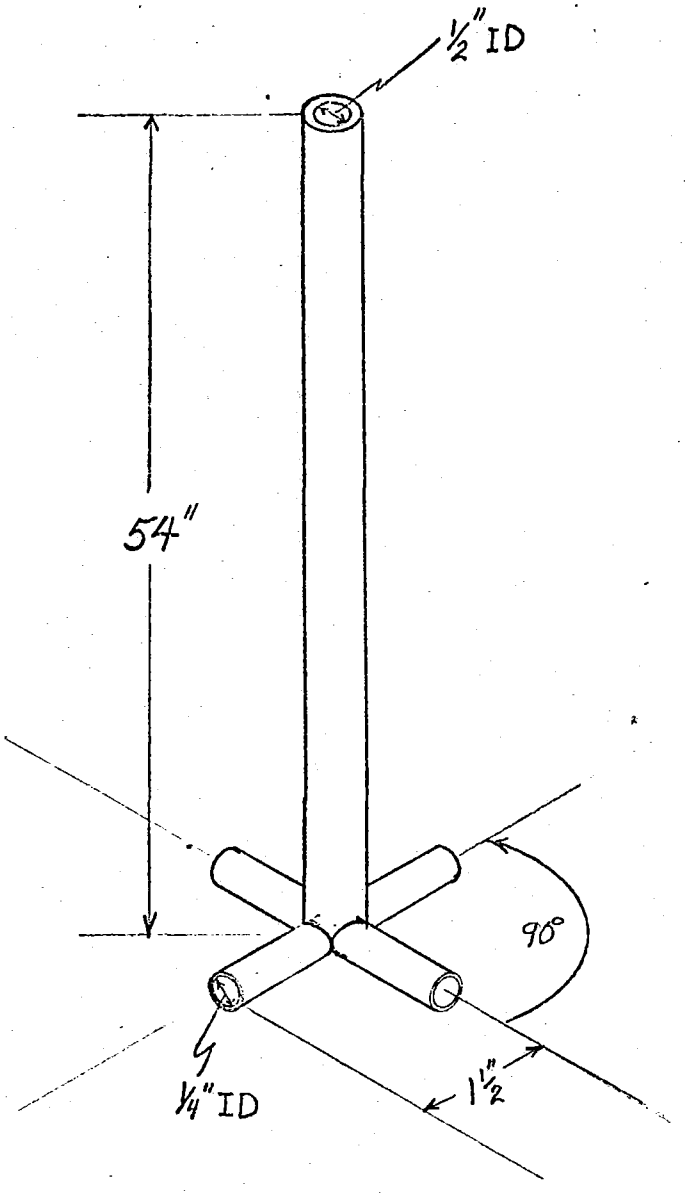

Sparger

DSW 299128

MONSANTO COMPANY

ORGANIC CHEMICALS DIVISION
MONSANTO, ILLINOIS

THIS DRAWING AND THE INFORMATION CONTAINED HEREON, IS CONFIDENTIAL AND IS THE PROPERTY OF MONSANTO COMPANY. IT IS LOANED WITH THE EXPRESSED AGREEMENT THAT IT WILL NOT BE REPRODUCED, COPIED, OR OTHERWISE DISPOSED OF, DIRECTLY OR INDIRECTLY, AND WILL NOT BE USED, IN WHOLE OR IN PART, TO FURNISH ANY INFORMATION FOR THE MAKING OF APPARATUS OR THE PRACTICING OF ANY PROCESS OR THERWISE WITHOUT WRITTEN PERMISSION OF MONSANTO COMPANY FIRST OBTAINED AND SPECIFIC AS TO EACH CASE. THE ACCEPTANCE OF THIS DRAWING WILL BE CONSTRUED AS AN ACCEPTANCE OF THE FOREGOING PROVISION.

	BY	DATE		BY	DATE
DRAWN	B. Schrichte	4/17/70	APPD.		
CKD.			APPD.		
DSGN. APPD.			APPD.		

TITLE: Sparger & Thermalwell For Pilot TDU

SCALE NONE	JOB NO.	EST. NO.

DEPT. No.	IDENTITY	DRAWING NUMBER	REV.
		TS-A-	

STLCOPCB4069040

APPENDIX III

TSD JOB NUMBER 4022
PURIFICATION OF HCL VIA IGNITION -- REPORT TO B. SCHRICHTE

YEAR	MONTH	PERSON HOURS	CHARTER	ITEM	PRODUCT CODE
69	1	909	133	1	81013.
69	2	909	124	1	81013.
69	3	909	3	1	81013.
69	4	909	151	1	81013.
69	5	909	159	1	81013.
69	6	909	134	1	81013.
69	7	909	95	1	81013.
69	8	319	10	1	81013.
69	10	909	103	1	81013.
69	11	415	89	1	81013.
69	12	415	97	1	81013.
70	1	411	80	1	81013.
70	1	415	155	1	81013.
70	2	415	166	1	81080.
70	3	415	116	1	81100.
70	4	415	32	1	81013.
70	5	415	3	1	81013.

TOTAL HOURS 1650

DSW 299129

APPENDIX III
(Continued)

TSD JOB NUMBER 4129
THERMAL DESTRUCTION UNIT - B. SCHRICHTE

YEAR	MONTH	PERSON HOURS	CHARTER	ITEM	PRODUCT CODE
69	9	319	15	1	81013.
69	9	319	15	1	81100.
69	9	319	20	1	81083.
69	10	319	38	1	81013.
69	10	319	20	1	81083.
69	11	315	7	1	81013.
69	11	315	7	1	81083.
69	11	316	16	1	81013.
69	11	316	16	1	81083.
69	12	315	4	1	81013.
69	12	315	6	1	81083.
69	12	316	15	1	81013.
69	12	316	15	1	81083.
70	1	315	2	1	81013.
70	1	315	2	1	81083.
70	2	315	5	1	81013.
70	2	315	5	1	81083.
70	2	316	13	1	81013.
70	2	316	13	1	81083.
70	3	315	64	1	81013.
70	3	316	44	1	81013.
70	4	315	86	1	81013.
70	4	316	42	1	81013.
70	5	315	57	1	81013.
70	6	209	20	1	81013.

TOTAL HOURS 547

DSW 299130

BATES LABEL NOS.
DSW 299131 through 299239
NOT USED