BREATHING AIR MODIFICATIONS

CLASS "A" DESIGN

ABERDEEN PVC PLANT

JULY 24, 1980

WORK BY: Bruce Vick
Bruce Vick
Process Engineer

REVIEWED BY: Velton E. Messick
V. E. Messick
Senior Process Engineer

APPROVED BY: R. A. Frohreich
R. A. Frohreich
Chief Process Engineer

Jerry Roberts

conoco

4

To [illegible]

Date [illegible]

1. Who conducts quarter inspection for possible maintenance + cartridge replacement?

2. Who will follow up to insure this is being done?

3. Who will write w/o for maintenance to change cartridges, etc.?

JR

VAB.0001027824

BREATHING AIR MODIFICATIONS

CLASS "A" DESIGN

ABERDEEN PVC PLANT

TABLE OF CONTENTS

I. INTRODUCTION

II. DESIGN BASIS

III. PROCESS DESCRIPTION

IV. EQUIPMENT SPECIFICATIONS

V. INSTRUMENT SPECIFICATIONS

VI. PROCESS PIPING SCHEDULE

VII. WORK LIST

VIII. DRAWINGS

BREATHING AIR MODIFICATIONS

CLASS "A" DESIGN

ABERDEEN PVC PLANT

I. INTRODUCTION

Breathing Air Modifications, Item A-23 of the 1980 Capital Budget, will improve and upgrade the current breathing air system at the plant.

The modifications to be done to the existing system include the replacement of the existing air-water separator with a vertical, ASME code stamped air-water separator with an internal mesh pad. The new air-water separator was sized using the TSO program "Drum Size".

To further insure adequate water removal from the fresh breathing air supply, coalescing filters will be placed inline on the branches of the breathing air lines to the different areas of the plant. Air bleeding points will be installed in the breathing lines. The bleeding points will allow continuous bleeding of the breathing air lines to reduce water condensation in the breathing air system.

A

BREATHING AIR MODIFICATIONS

CLASS "A" DESIGN

ABERDEEN PVC PLANT

II. DESIGN BASIS

The breathing air system at the Aberdeen Plant supplies air to the different areas of the plant which include Line I, Line III, Dry Blend, Plasticizer, VCM Tank Farm, and the old and new reactor modules.

The vinyl area of the plant creates the largest demand for breathing air due to possible VCM exposure by operating personnel.

The design basis for the breathing air modifications is 6 SCFM per user.[1]

Maximum Breathing Air Usage

The breathing air system will experience a maximum of 8 users during periods of peak loading. This would occur at a time when a reactor in both the old and new reactor units was down for maintenance and VCM was being unloaded at the VCM tank farm simultaneously

$$8 \text{ Users} \times 6 \frac{\text{SCFM}}{\text{User}} = 48 \text{ SCFM (max.)}$$

---

[1] Class "A" Process Design, Basis of Bids Issue, PVC Capacity Replacement; Aberdeen, MS Volume I, Page 64.

BREATHING AIR MODIFICATIONS

CLASS "A" DESIGN

ABERDEEN PVC PLANT

III. PROCESS DESCRIPTION

Air enters through the existing inlet stack at ambient conditions. Air flows through the inlet filter to existing compressor C-101. C-101 is a Nash liquid ring compressor which uses process water as seal water to compress the air. The seal water and compressed air are discharged into an existing two inch line that is to be tied into new line 2-AI-101, which is the inlet to new air-water separator, WS-101.

Seal water supplied to the compressor is separated from the compressed air in the air-water separator. The existing level probe on the existing air-water separator will be relocated to WS-101 to drain water from the air-water separator. The water will drain through line 1-AU-103 as separator blowdown. Line 1-AU-103 is insulated and electric traced for freeze protection. Safety valve, SV-101, on WS-101 will be set to relieve internal pressure at 85 psig.

Air from WS-101 is discharged into line 2-AI-102. Line 2-AI-102 ties into the existing breathing air header. Air flows through the existing breathing air header to the existing F-5 reactor. The existing F-5 reactor is to be cleaned out for use as the breathing air receiver. In the event of compressor failure, the F-5 reactor will provide 8 men breathing air for 37 minutes.

Existing pressure switch, PSL-101, which is presently located on the existing air receiver at the compressor station is to be relocated to WS-101. At a pressure of 45 psig, PSL-101 will send a signal to the existing red flashing light at the compressor station to notify operating personnel of low system air pressure.

New pressure gauge, PG-101, is available on the F-5 reactor to monitor the internal pressure. From the existing F-5 reactor, breathing air is distributed to the different areas of the plant which include: 1) VCM tank farm, 2) old reactor module, 3) new reactor module, 4) V-11 dryer building, and 5) the compound, plasticizer, and V-10 dryer buildings.

BREATHING AIR MODIFICATIONS

CLASS "A" DESIGN

ABERDEEN PVC PLANT

III. PROCESS DESCRIPTION - (continued)

In order to remove any water that condenses in the breathing air lines, coalescing filters will be installed in the different breathing air branches that distribute breathing air to the plant. The coalescing filters will be installed in the following breathing air lines:

1) breathing air header that distributes fresh air to the V-10 dryer building, compound, dry blend, and plasticizer,
2) breathing air header to the new reactor module,
3) breathing air line to the V-10 dryer building,
4) the breathing air line to the VCM unloading area, and
5) the breathing air line to the V-11 dryer baghouses.

Also, air bleeding points will be installed in the breathing air system. The bleeding points will allow a constant flow from the breathing air system. For location of the bleeding points see Figure 2.

BREATHING AIR MODIFICATIONS

CLASS "A" DESIGN

ABERDEEN PVC PLANT

IV. EQUIPMENT SPECIFICATIONS

Item No.	Service	Location
F-101	Coalescing Filter	1-AI-105
F-102	Coalescing Filter	1-AI-113
F-103	Coalescing Filter	1-AI-109
F-104	Coalescing Filter	1-AI-117
F-105	Coalescing Filter	1-AI-121
MP-101	Mesh Pad	WS-101
TP-101	Drain Trap	F-5 Reactor
WS-101	Air-Water Separator	2-AI-101

CONOCO

ENGINEERING CENTER

PONCA CITY, OKLAHOMA

SPECIFICATION SHEET

AIR-WATER SEPARATOR

A F E NO. _____
DATE 5/12/80 W O NO _____
MADE BY SBV INQ NO. _____
APP'D BY VEH REQ. NO. _____
B M NO _____ P O NO _____

PLANT ABERDEEN PVC PLANT PROJECT: BREATHING AIR MODIFICATIONS

ITEM NO
SERVICE AIR-WATER SEPARATOR

ITEM NO.: WS-101

SERVICE: AIR-WATER SEPARATION, TO REMOVE SEAL WATER FROM THE COMPRESSED AIR.

LOCATION: DISCHARGE OF EXISTING COMPRESSORS

TEMP: °F, NORMAL (DESIGN) 90 (100)

Pressure: PSIG NORMAL (DESIGN) 75 (85)

DIMENSION: 2.5 ft x 7.5 ft

MATERIAL OF CONSTRUCTION: C.S.

DRUM POSTION: VERTICAL

STREAM HANDLED:

VAPOR		LIQUID	
FLOWRATE (lb/hr)	514.0	FLOWRATE (lb/hr)	5998
MOLECULAR WEIGHT	29.0	DENSITY (lb/ft³)	62.110
VISCOSITY, CP	0.019	FLOWRATE (GPM)	12.032
DENSITY (lb/ft³)	0.442		
FLOWRATE (ACFS)	0.323		

NOTES:

(1) WS-101 TO HAVE AN INTERNAL MESH PAD 0.5 ft thick

(2) WS-101 TO HAVE SAFETY RELIEF VALVE SV-101

(3) WS-101 TO BE ASME CODE STAMPED

SHEET 1 OF 2 REV 0

VAB0001027831

CONOCO

ENGINEERING CENTER

PONCA CITY, OKLAHOMA

SPECIFICATION SHEET

A F E NO. _____
DATE 5/30/80 W O NO _____
MADE BY SBV INQ NO _____
APP'D BY VEM REQ NO _____
B M NO _____ P O NO _____

PLANT ABERDEEN NG PLANT PROJECT: BREATHING AIR MODIFICATIONS

ITEM NO
SERVICE AIR WATER SEPARATOR

NOTES (CONT'D)

(4) EXISTING LEVEL CONTROL LEG AT THE BREATHING AIR STATION IS TO BE RELOCATED TO WS-101. THE LEVEL CONTROL LEG CONSISTS OF LEVEL GAUGE AND LEVEL SWITCH. THE LEVEL IS TO BE MAINTAINED AT THE BOTTOM TANGENT ON WS-101.

SHEET 2 OF 2 REV. 0

CONOCO

ENGINEERING CENTER

PONCA CITY, OKLAHOMA

SPECIFICATION SHEET

A F E NO. _____
DATE 5/12/80 W O NO _____
MADE BY SBV INO NO. _____
APP'D BY VEM REQ NO. _____
B M NO _____ P O NO _____

PLANT ABERDEEN PVC PLANT PROJECT: BREATHING AIR MODIFICATIONS

ITEM NO
SERVICE DRAIN TRAP

ITEM NO. TP-101

LOCATION: F-5 REACTOR

SERVICE: TO DRAIN WATER FROM THE F-5 REACTOR THAT WILL SERVE AS THE BREATHING AIR RECEIVER

TEMP °F, NORMAL (DESIGN) 70 (100)

PRESSURE, PSIG, NORMAL (DESIGN) 75 (85)

MATERIAL HANDLED WATER

MATERIAL OF CONSTRUCTION: C.S.

DISCHARGE RATE, GPM (MIN)(MAX) (0.0175)(0.03) (1)

NOTES:

(1) RATES BASED ON AIR ENTERING AT 90°F AND MAX RATE BASED ON AIR AT 32°F AND MIN RATE BASED ON AIR AT 70°F.

(2) RECOMMENDED MANUFACTURER: HANKINSON
RECOMMENDED MODEL: HANKINSON MODEL SOS

SHEET 1 OF 1 REV

VAB.0001027833

ENGINEERING CENTER

PONCA CITY, OKLAHOMA

SPECIFICATION SHEET

FILTER

A F E NO. _____
DATE 5/12/80 W O NO _____
MADE BY SBU INQ NO _____
APP'D BY _____ REQ NO. _____
B M NO _____ P O NO _____

PLANT ABERDEEN PVC PLANT PROJECT: BREATHING AIR MODIFICATIONS

ITEM NO
SERVICE FILTERS

ITEM NO.	F-101
SERVICE:	BREATHING AIR
LOCATION:	EAST OF THE V-10 DRYER BUILDING RIGHT BEFORE THE BREATHING AIR LINE BRANCHES TO GO TO COMPOUND, PLASTICIZER, AND THE V-10 DRYER BUILDING.
STREAM HANDLED	AIR
TEMP, °F, NORMAL (DESIGN)	70 (100)
PRESSURE, PSIG NORMAL (DESIGN)	75 (85)
FLOWRATE, SCFM, NORMAL (DESIGN)	24 (50) (1)
DENSITY AT T AND P, lb/ft³	0.458
VISCOSITY AT T AND P	0.0185
MATERIAL REMOVED	CONDENSED WATER
ALLOWABLE CLEAN ΔP, PSI	2 PSIG
PARTICLE RETENSION, MICRON	10
MATERIAL OF CONSTRUCTION	
FILTER	C.S.
ELEMENT	FELT WOOL PADS

RECOMMENDED MODEL: HANKINSON 3904-2 OR COMPANY APPROVED EQUAL (3)

F-101 WILL FILTER THE BREATHING AIR FOR USE AT COMPOUND, PLASTICIZER, AND THE V-10 DRYER BUILDING.

SHEET 1 OF 2 REV

HANKISON® TRIP-L-TRAP® SNAP-TRAP®

AUTOMATIC CONDENSATE DRAIN TRAPS for Compressed Air Systems

The Hankison line of compressed air/gas condensate drain traps automatically collect and discharge entrained moisture and oil from separators, receiver tanks, intercoolers, aftercoolers, dryers, filters, drip legs, and other equipment in compressed air systems that require drainage of condensates.

These traps bring production costs down by eliminating the loss of expensive compressed air when petcocks are continuously bled and the man hours wasted when equipment and air lines are manually drained. And because they're automatic, there's no need to worry that unattended drain lines will back up and interrupt production.

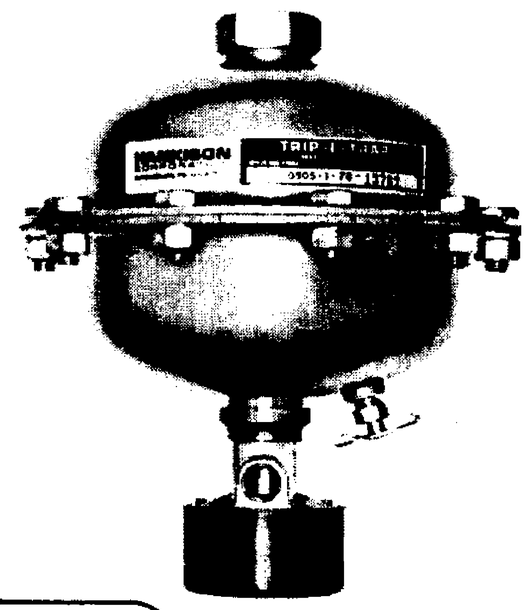

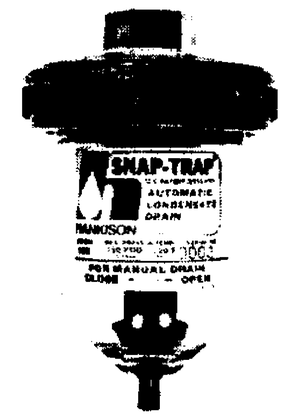

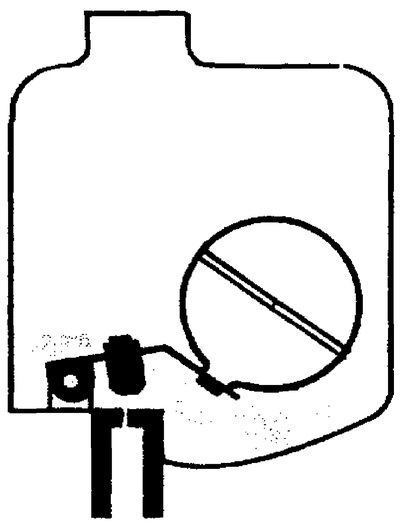

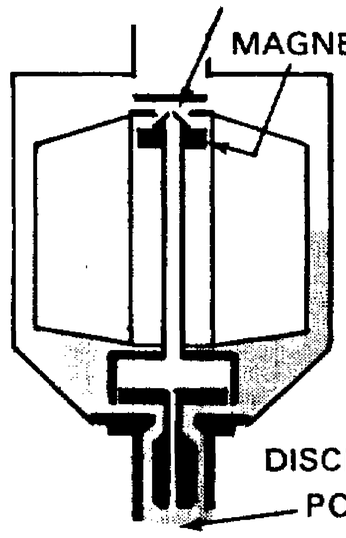

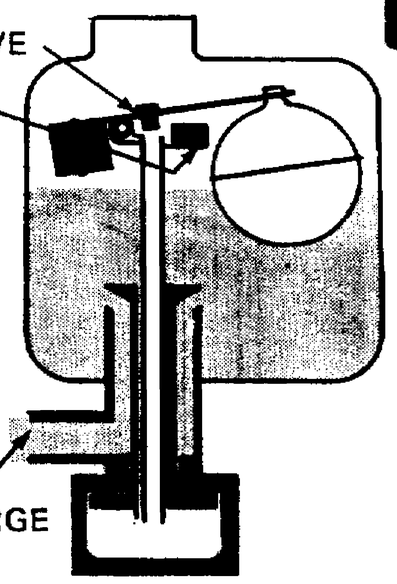

ORDINARY TRAP HANKISON SNAP-TRAP HANKISON TRIP-L-TRAP

Ordinary Traps vs. Hankison Traps

Ordinary compressed air condensate traps suffer from two problems: **1.** They leak and lose a great deal of expensive plant air. **2.** They clog and, therefore, do not function at all.

The basic reason these compressed air traps leak and clog is related to their fundamental design. In ordinary traps, power to open and close the discharge valve is supplied by the float. This causes the area of the discharge orifice in the discharge valve to be small in order to minimize the force which must be overcome by the float. This small orifice can easily become clogged by oil sludge, pipe scale, and other contaminants.

Ordinary traps also have a tendency to discharge constantly. They are designed so that the float rises as the water level rises, gradually opening the discharge valve. The discharge valve remains open just long enough to discharge condensate at the same rate at which it collects in the trap. This constant flow causes cutting and erosion of the valve seat. Damage to the valve seat leads to further leakage. This, of course, results in more air loss.

The Hankison **TRIP-L-TRAP®** and **SNAP-TRAP®** are not wholly dependent upon the weak buoyant forces developed by the float to open the discharge valve. As the condensate in the trap rises, the float does not immediately rise, but is held firmly in place by a **magnet**. When the buoyant force of the float overcomes the magnetic force of the magnet, the float rises and trips a **pilot valve** open. The pilot valve allows line pressure to enter a piston chamber and pneumatic power supplies the force to open the discharge valve. Valve operation by pneumatic power permits the use of a large discharge orifice. This allows the trap to flush away deposits and "crud" that might otherwise accumulate and clog the discharge orifice. When condensate has been discharged, the pilot valve closes, and line pressure forces the discharge valve shut. Line pressure then holds the valve shut until the next operation. This snap open, snap shut design plus the positive sealing of the discharge port eliminates "valve chattering" and costly leakage problems . . . leakage problems which cause excessive wear and subsequent trap failure.

VAB.0001027835

TRIP-L-TRAP®

FEATURES:

- Designed for heavy duty service—built to handle moisture and oil emulsions that cause most other traps to fail
- Long life—Repair Parts Kits are available for rebuilding traps when necessary
- Reliable—only two moving parts
- Impervious to synthetic lubricants
- Maximum working pressures to 500 PSIG
- All stainless steel models available
- Patented Design (U.S. Patent #3,635,238)

OPERATION:

As the condensate begins to rise in the Trip-L-Trap, the float (1) remains in place, held by the magnet (2) mounted on the valve stem (3). As the condensate level in the trap rises, the buoyant force of the float overcomes the holding force of the magnet TRIPPING the pilot valve (4) open. A counter weight on the float arm (9) helps to speed up the motion of the float arm.

The pilot valve mechanism is protected from contaminants by a baffle in the trap shell. Air enters the pilot valve (4), flows down through the hollow valve stem (5), and up under the piston (6) in the piston cylinder (10). This air pressure forces the piston assembly to move upward opening the main discharge valve (7). The condensate is forced into the main discharge valve and out the condensate discharge outlet. (The viton seal on the valve stem prevents condensate from reaching the piston chamber).

When sufficient condensate has been discharged, the float drops causing the pilot valve (4) to close. The closing action is increased by attraction of the float arm (9) and the magnet (2). With the pilot valve shut, the air supply to the piston (6) is cut off. Pressure on the float arm causes the piston assembly to return to its original position closing the main discharge valve. A small bleed hole (11) in the piston cylinder (10) enables air pressure in the piston cylinder to dissipate to the atmosphere. Air pressure in the trap housing creates a positive seal between the discharge valve and outlet eliminating air leakage between cycles.

All models can be blown down manually by opening a petcock.

Model 506 Trip-L-Trap incorporates a second float to increase condensate discharge cycle time. A skim tube "sweeps out" any oil slick that might form on the surface of the liquid inside the trap.

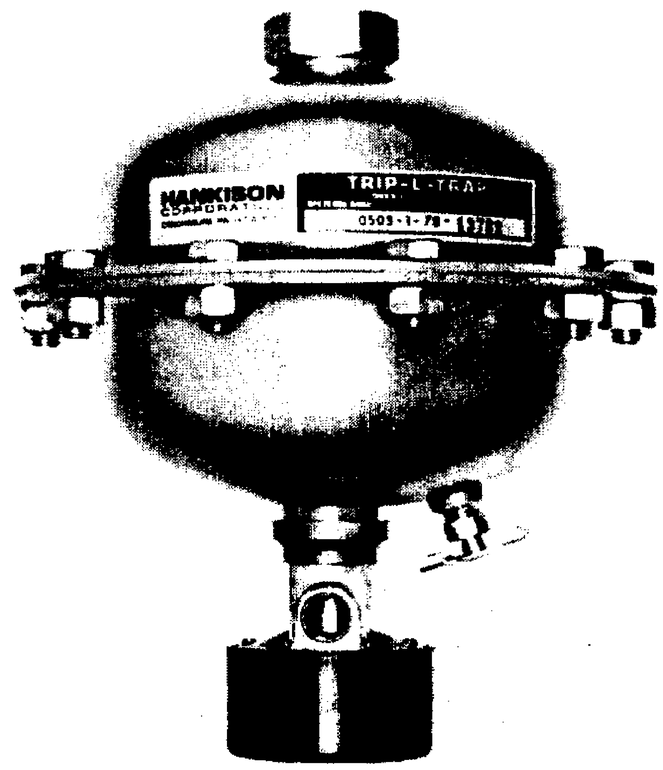

MODEL 505

MODEL 506

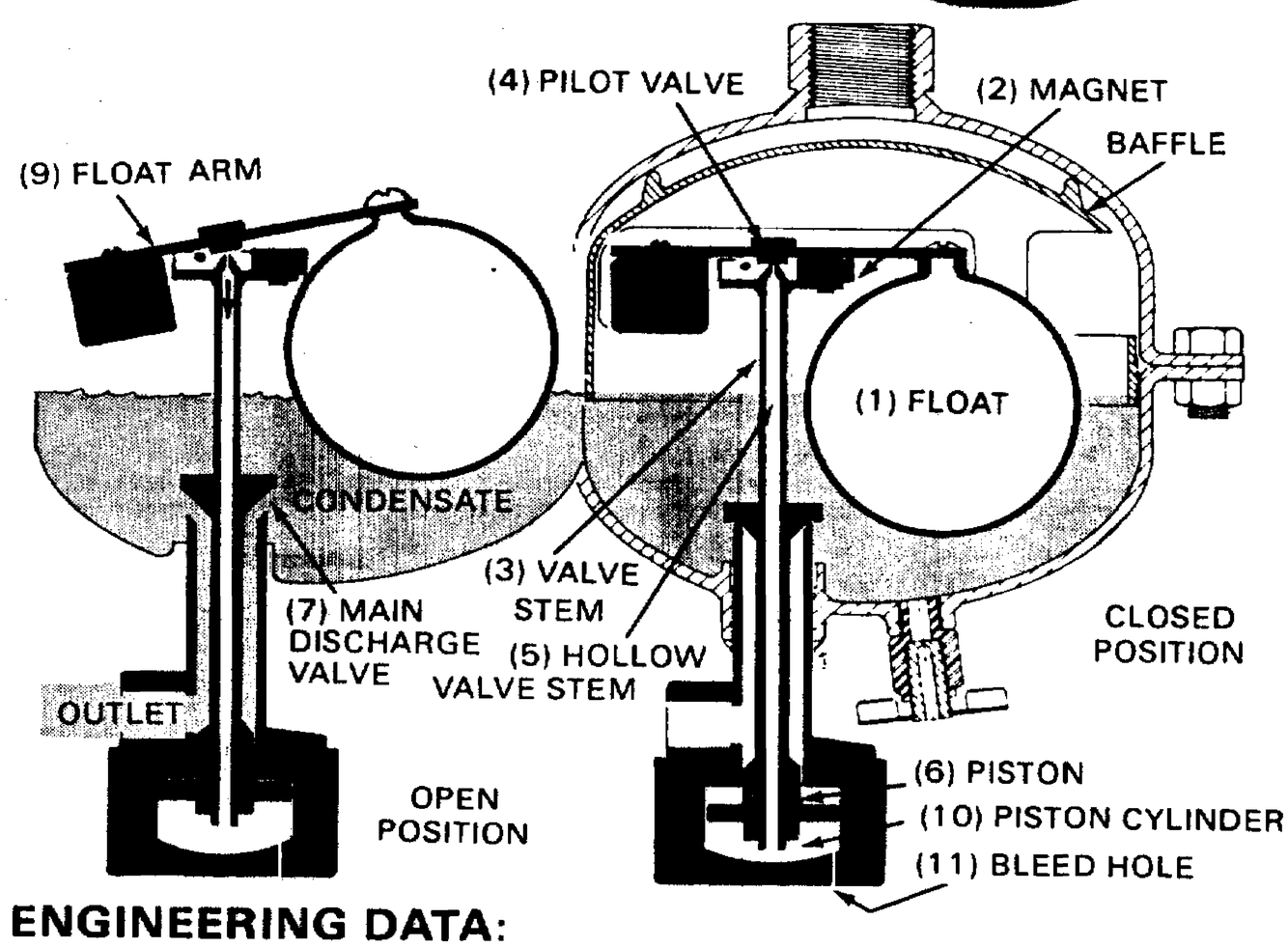

ENGINEERING DATA:

Model	Min/Max Operating Pressure		Min/Max Operating Temp.		Primary Materials Of Construction		Discharge per Operation	Nominal Capacity*	Max. Capacity*
	PSIG	Bar	°F	°C	Shell	Internals			
505	10/300	.69/21	35/150	1.7/65.6	Carbon Steel	Steel, Stainless Steel, Brass, Delrin, Nylon	190cc .4 pints	190cc/min 11.4 liters/hr 3 gals/hr.	1140cc/min 68.4 liters/hr 18 gals/hr
505HP	10/500	.69/35							
505SS	10/300	.69/21	35/150	1.7/65.6	304 Stainless Steel	Stainless Steel, Viton	190cc .4 pints	190cc/min 11.4 liters/hr 3 gals/hr	1140cc/min 68.4 liters/hr 18 gals/hr
505HPSS	10/500	.69/35							
506	10/300	.69/21	35/150	1.7/65.6	Carbon Steel	Steel, Stainless Steel, Brass, Delrin, Nylon	1514cc 3.2 pints	1514cc/min 90.8 liters/hr 24 gals/hr	9084cc/min 544.8 liters/hr 144 gals/hr

*Traps are designed to operate at one discharge per minute for one year before rebuilding is required. Operation at more than one discharge per minute may require more frequent rebuilding.

SNAP-TRAP®

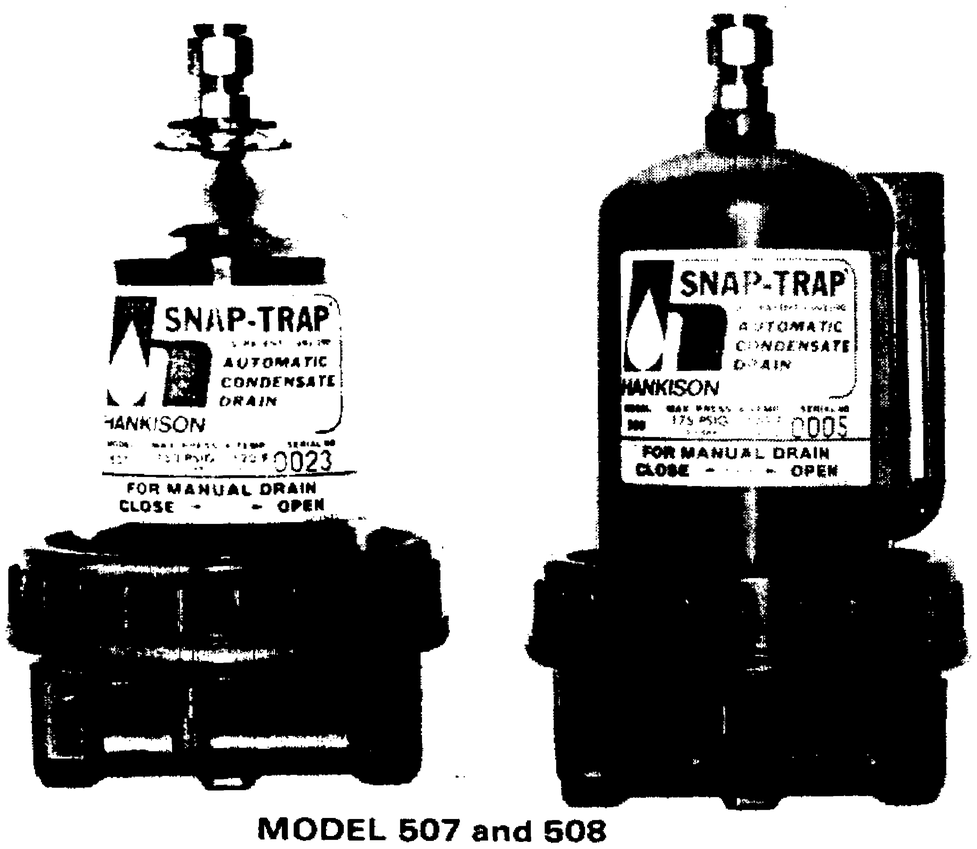

MODEL 507 and 508

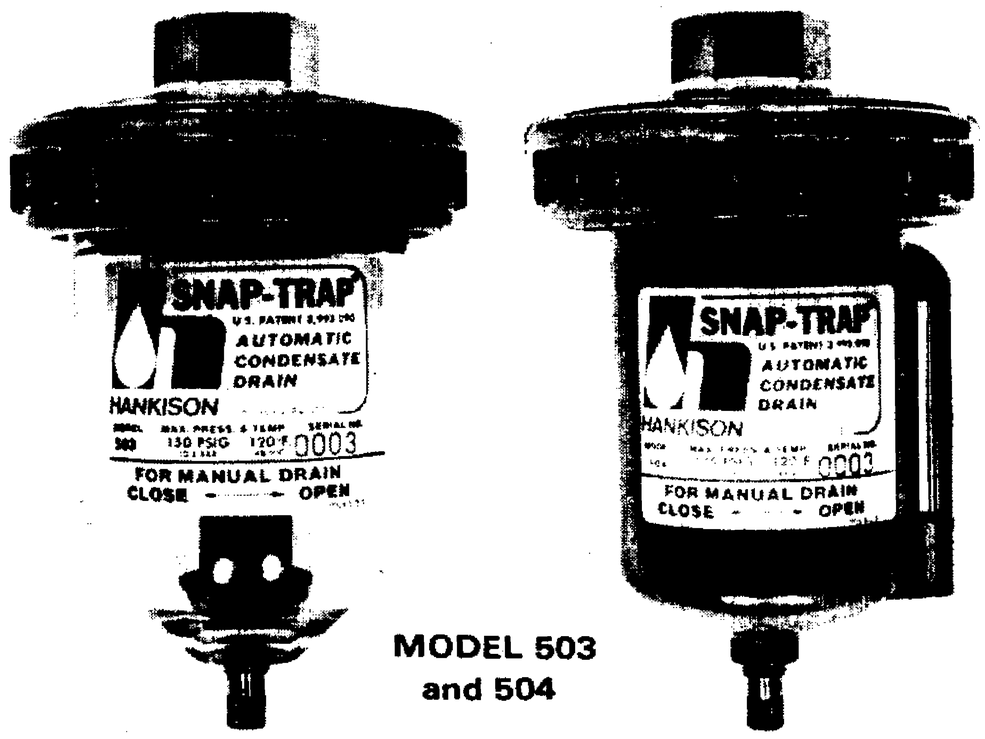

MODEL 503 and 504

FEATURES:

- Economical—for light to medium duty service
- Models with clear polycarbonate bowls for easy viewing of condensate level and trap operation (not for use on systems where synthetic compressor lubricants are used)
- Models with metal bowls and sight glass available for use on systems using synthetic lubricants
- Models with top inlet connection or bottom inlet connection (ideal for receiver tanks) available
- Patented Design (U.S. Patent #3,993,090)
- Tested for over a million cycles

ENGINEERING DATA:

Model	Min/Max Operating Pressure		Min/Max Operating Temp.		Primary Materials of Construction		Discharge per Operation	Nominal Capacity
	PSIG	BAR	°F	°C	Bowl	Internals		
503 (1) 507 (2)	20/150	1.4/10.3	35/120	1.7/48.9	Polycarbonate (3)	Polycarbonate Buna N Seals	20cc .04 pints	20cc/min 1.2 liters/hr .3 gals/hr
504 (1) 508 (2)	20/175	1.4/12.1	35/120	1.7/48.9	Metal w/ sightglass	Delrin Viton Seals		

(1) Top inlet connection. (2) Bottom inlet connection. (3) Metal bowl guards are available.

OPERATION:

As condensate begins to rise in the SNAP-TRAP, the float (1) remains in place, held by the magnet (2) and metal washer (11). When the buoyant force of the float overcomes the magnetic force of the magnet, the pilot valve (3) opens, allowing line pressure to enter the main discharge chamber (4) causing the piston (5) to snap downward opening the main discharge chamber. Condensate is forced through a stainless steel filter (6) and fluted ports into the lower portion (7) of the chamber and is discharged through the outlet (8).

When sufficient condensate has been discharged, the float drops closing pilot valve (3). Excess air in the discharge chamber is bled off through orifice (10), which is protected by a filter (12), and the piston returns to the closed position. Pressure in the lower portion of the chamber creates positive sealing of the discharge port. There is no air leakage between cycles. The pilot valve mechanism is protected from contaminants by baffle (13).

Models 503 & 504 can be blown down manually by turning the knurled outlet connection (8). This causes the entire mechanism to move upward, allowing the condensate to flow through the manual drain passage (9) to the outlet (8). Models 507 and 508 have a separate manual drain.

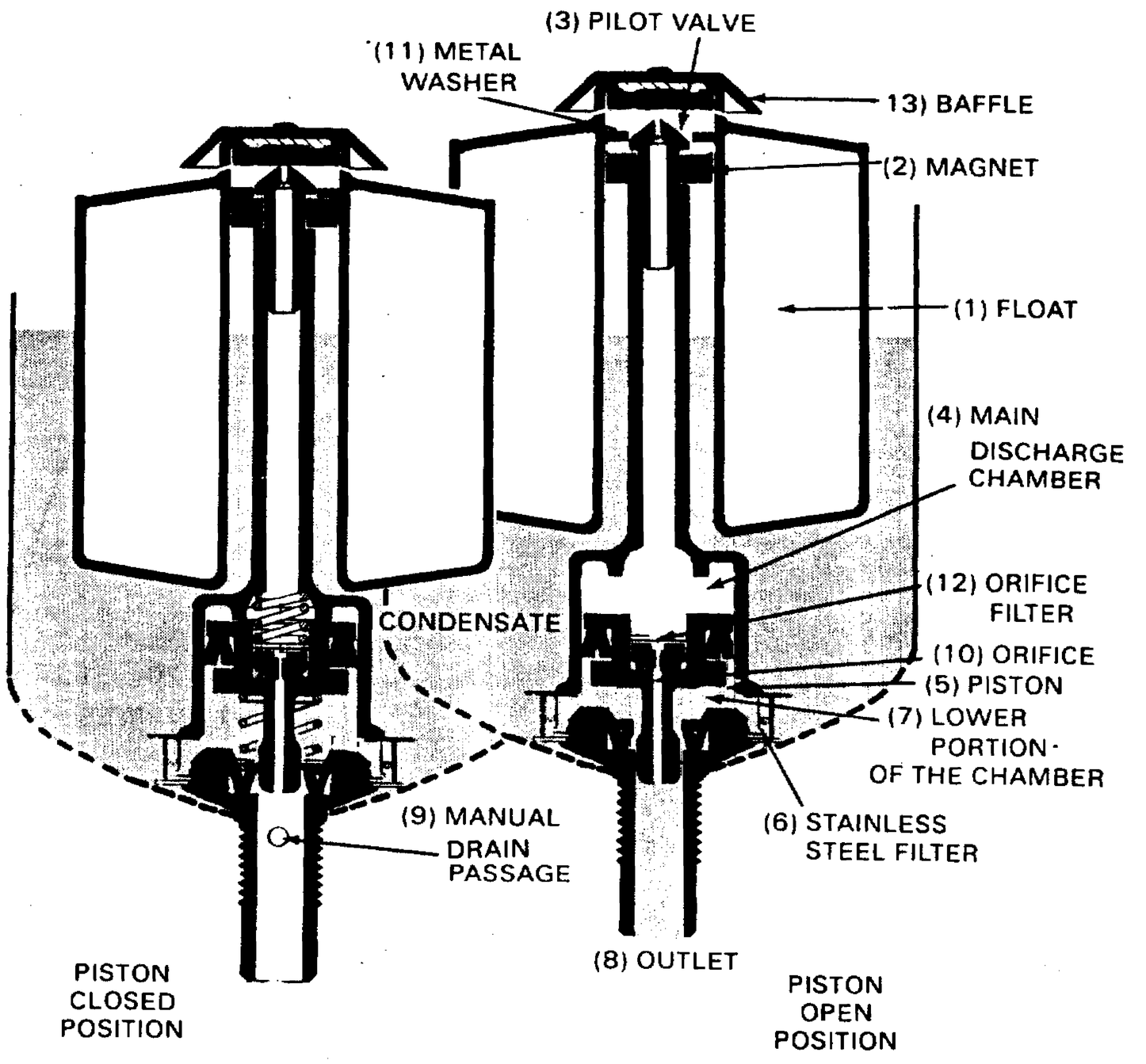

VAB.0001027837

INSTALLATION:

Inlet Piping:

Trap should be installed below level of device being drained to allow condensate to flow into the trap by gravity. Strainers to protect the trap from undue particulate contamination and isolation valves to permit quick and easy trap servicing are useful accessories.

Drain Line:

A line is recommended from the trap discharge to drain. As the trap discharges condensate at system pressure, the discharge line should be anchored to prevent movement.

Dimensions

Model	A	B	Inlet Conn. (NPTF)	Drain Conn.
503, 504	3¾"	6⅜"	½"	5/16" Tube
507, 508	3¾"	7"	⅜"	⅜" NPTF
505, 505HP, 505SS, 505HPSS	7"	8½"	¾"	¼" NPTF
506	7"	13¾"	1"	¼" NPTF

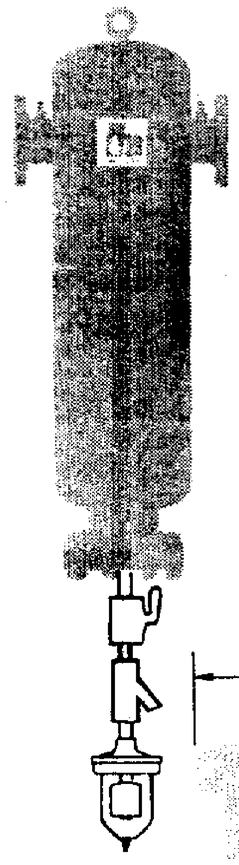

Typical Installations:

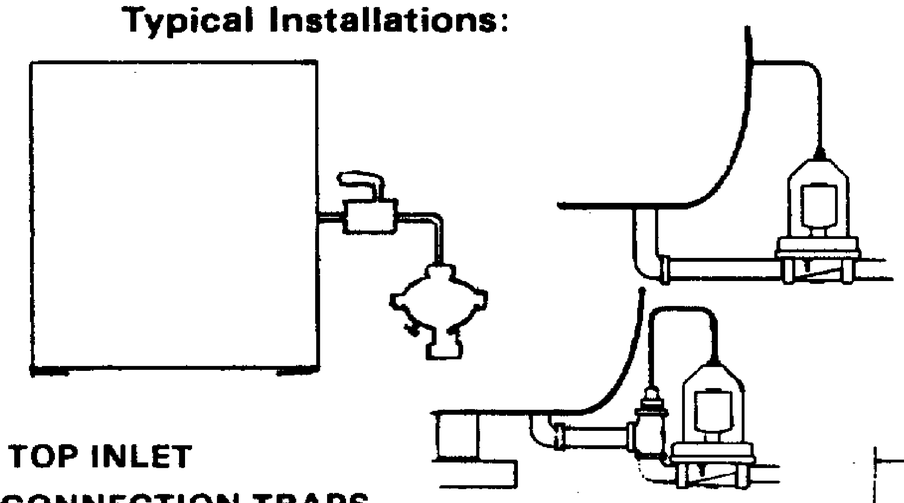

TOP INLET CONNECTION TRAPS

BOTTOM INLET CONNECTION TRAPS

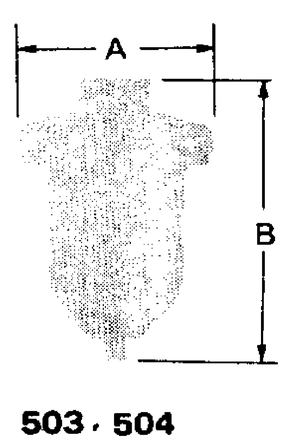

503, 504

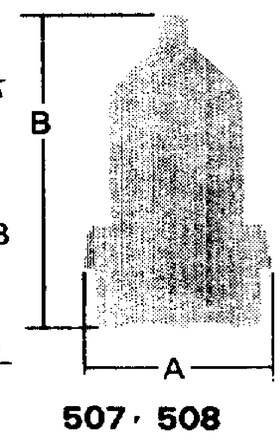

507, 508

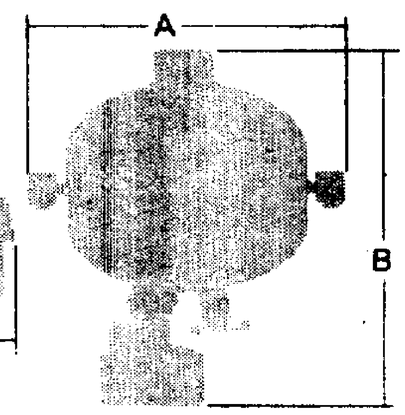

505, 505 HP, 505 SS, and 505 HPSS

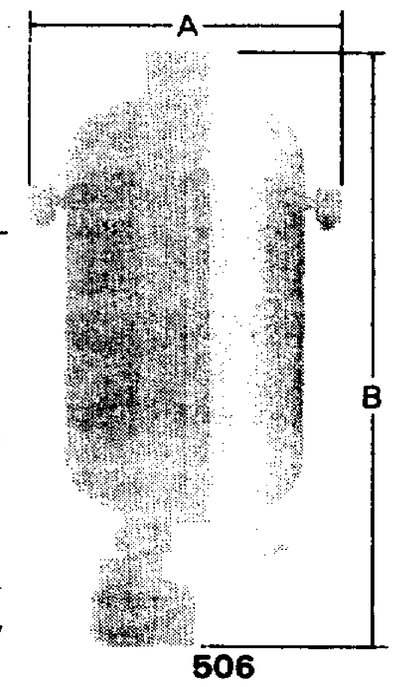

506

Choosing the Correct Size HANKISON Trap

I. To determine how much condensate forms in a given area of your compressed air system:

A) Measure the temperatures of the compressed air ENTERING and EXITING a system component (receiver tank, aftercooler/separator, etc.) or length of pipe line on which you wish to install a trap.

B) Refer to Graph

1) Locate ENTERING compressed air temperature at bottom of graph; move vertically to curve corresponding to your system's operating pressure; move horizontally to left side of graph and read amount of water condensed in cubic centimeters per minute (cc/min.) per SCFM of air flow.

Note: If the temperature of the ENTERING air is to the right of the intersection of the applicable pressure curve and the temperature line on the bottom of the graph (for example 148°F at 100 PSIG), use zero as the value for step I,B,1 and proceed to step I,B,2.

2) Locate EXITING compressed air temperature at bottom of graph; move vertically to curve corresponding to your system's operating pressure; move horizontally to left side of graph and read amount of water condensed in cubic centimeters per minute (cc/min.) per SCFM of air flow.

Note: Value of EXITING air temperature should be based on the coldest temperature to which the air has been cooled in the system. Do not use any reheated air temperatures.

C) Determine amount of condensate formed per minute for each SCFM of air flow by subtracting amount found in I,B,1 from amount found in I,B,2.

D) Determine total amount of condensate formed by multiplying value calculated in I,C above by your system's flow rate in SCFM.

II. Select the proper model Hankison trap for your system by referring to the Capacity section of the Engineering Data tables inside this bulletin.

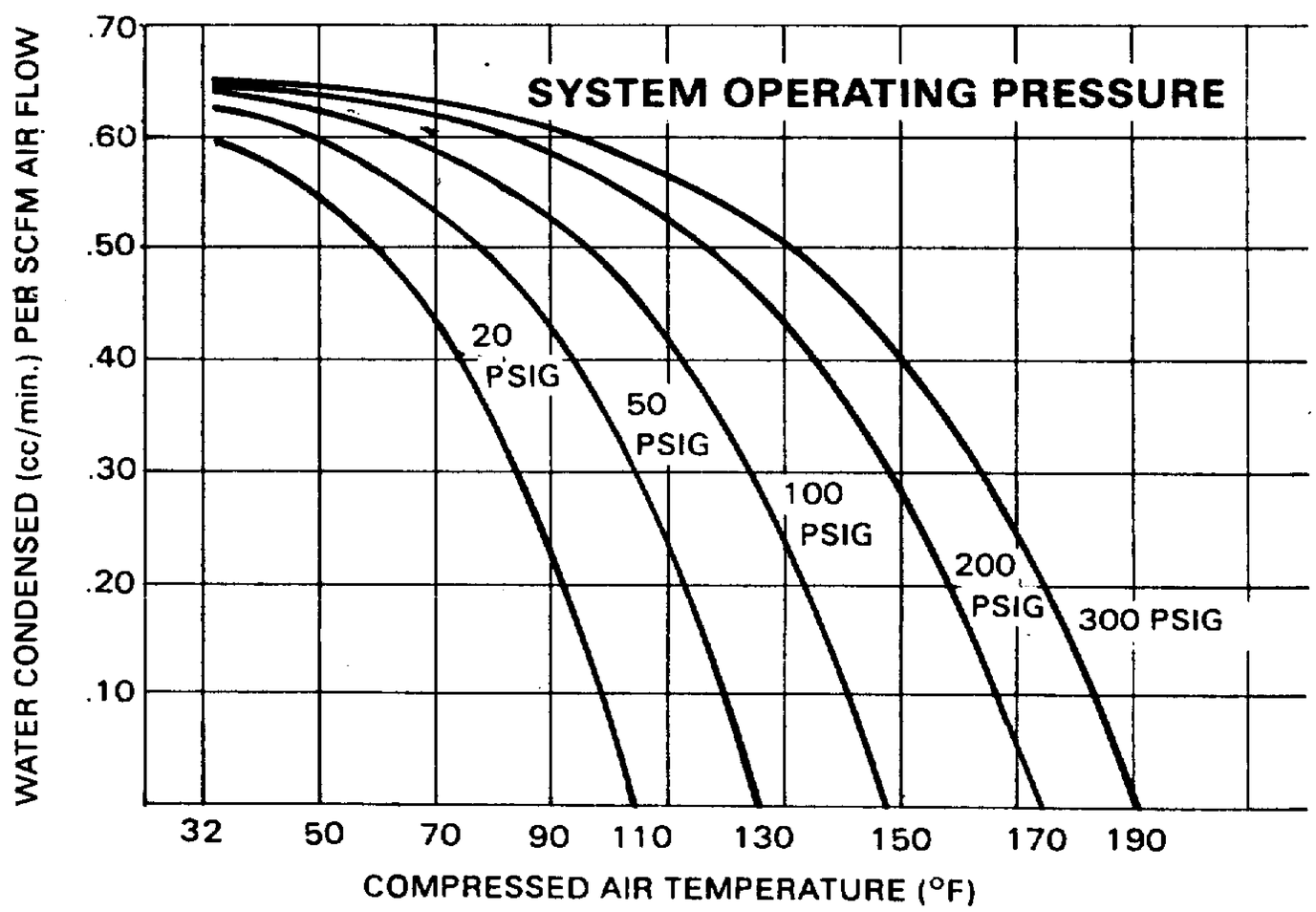

HANKISON CORPORATION, Canonsburg, PA 15317, Phone: 412/745-1555, Telex: 81-2452, Cable HANKORP

PRICE AND ORDERING INFORMATION AVAILABLE FROM:

HANKISON®

GILBERT & ASSOCIATES, INC.
DISTRICT REPRESENTATIVES
5050 POPLAR AVENUE
MEMPHIS, TENN. 38157
(901) 767-7894

VAB.0001027838

Printed in U.S.A.

HANKISON® CENTRIFLEX™ Compressed Air Separator/Filter

Efficient Separation and 3 Micron Filtration In One Compact Housing

SEPARATION—

The First Stage

A unique stainless steel separator core, using the principles of centrifugal force and impaction, is 99% efficient in removing particles 10 microns in size and larger.

The reusable cartridge type separator is completely removable for easy cleaning.

FILTRATION—

The Second Stage

A replacement filter sleeve, which fits over the separator core, assures absolute removal of solids and liquids 3 microns and larger in size.

Solids removal—finer filtration at less cost

The filter sleeve, constructed of an in-depth arrangement of glass fibers, has a high percentage of void spaces, allowing it to accumulate 3 to 4 times more particulates than coarser surface (pore) type filter element materials such as porous metal and plastic. Also the in-depth arrangement of fibers resists clogging due to gummy residues and sticky lacquers which are frequently present in compressed air systems and readily adhere to and foul surface type filters. This ability to accumulate large amounts of solid particles and resist clogging means that there is only a gradual increase in pressure drop across the filter, resulting in a long operating life and less operating cost.

Liquids removal—higher efficiencies from no flow to full flow

By using coalescence to force small droplets to form into larger droplets, the filter media continually collects all liquid droplets 3 microns in size and larger, as well as a portion of smaller droplets. This means that 99% of water droplets and 40% of oil aerosols are collected and discharged from the system.

The combination of filter sleeve and separator core ensures high efficiency liquid separation over a full range of flows. There is no reduction in efficiency at less than rated flows, a common occurrence in purely centrifugal separators.

Housing design—features easy installation and maintenance

The in-line, inlet and outlet connection design reduces installation time and expense. Additional piping to maintain alignment is not required. Cartridge replacement is made easy by removable bowls for models 3401 through 3406 and a convenient bottom flange opening for models 3407 through 3415.

FEATURES:

- **High efficiency separation—removes 99% of water droplets, 40% of oil aerosols.**
- **Combination of separator core and filter sleeve maintain high efficiency from no flow to full flow.**
- **Replaceable filter sleeve removes 100% of particles 3 microns and larger in size—while giving long sleeve life.**

OPERATION

Air enters the top of the Centriflex separator/filter and flows down through the center of the separator core and radially outward. The air is subjected to a strong centrifugal force as it passes through the separator core which is constructed of a pair of stainless steel perforated tubes. The orifices in the first tube (A) are staggered in relation to those in the second (B). This causes particles 10 microns and larger to continue in a straight course after leaving the inner tube, impacting and impinging on the inside of the outer tube where they form a film which drains to the bottom of the separator core.

The air then passes into the filter sleeve (C) which is composed of an in-depth bed of resin impregnated glass fibers. Solid particles (to 3 microns absolute) are captured and retained here. Liquid aerosols are coalesced on the glass fibers forming large droplets which move downward to the bottom of the cartridge where they drain by gravity into the filter housing and are removed from the air system.

This combination of separation and coalescence allows the Centriflex separator/filter to handle large inlet liquid loads (up to 25,000 ppm w/w) while removing 99% of water droplets and 40% of oil aerosols over a full range of flow conditions.

Models from 15 SCFM to 11,400 SCFM

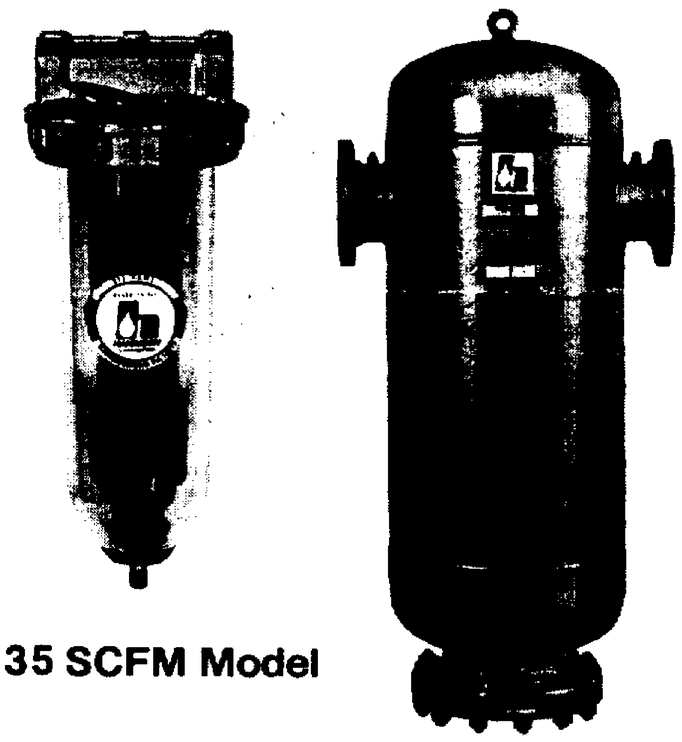

35 SCFM Model

6600 SCFM Model

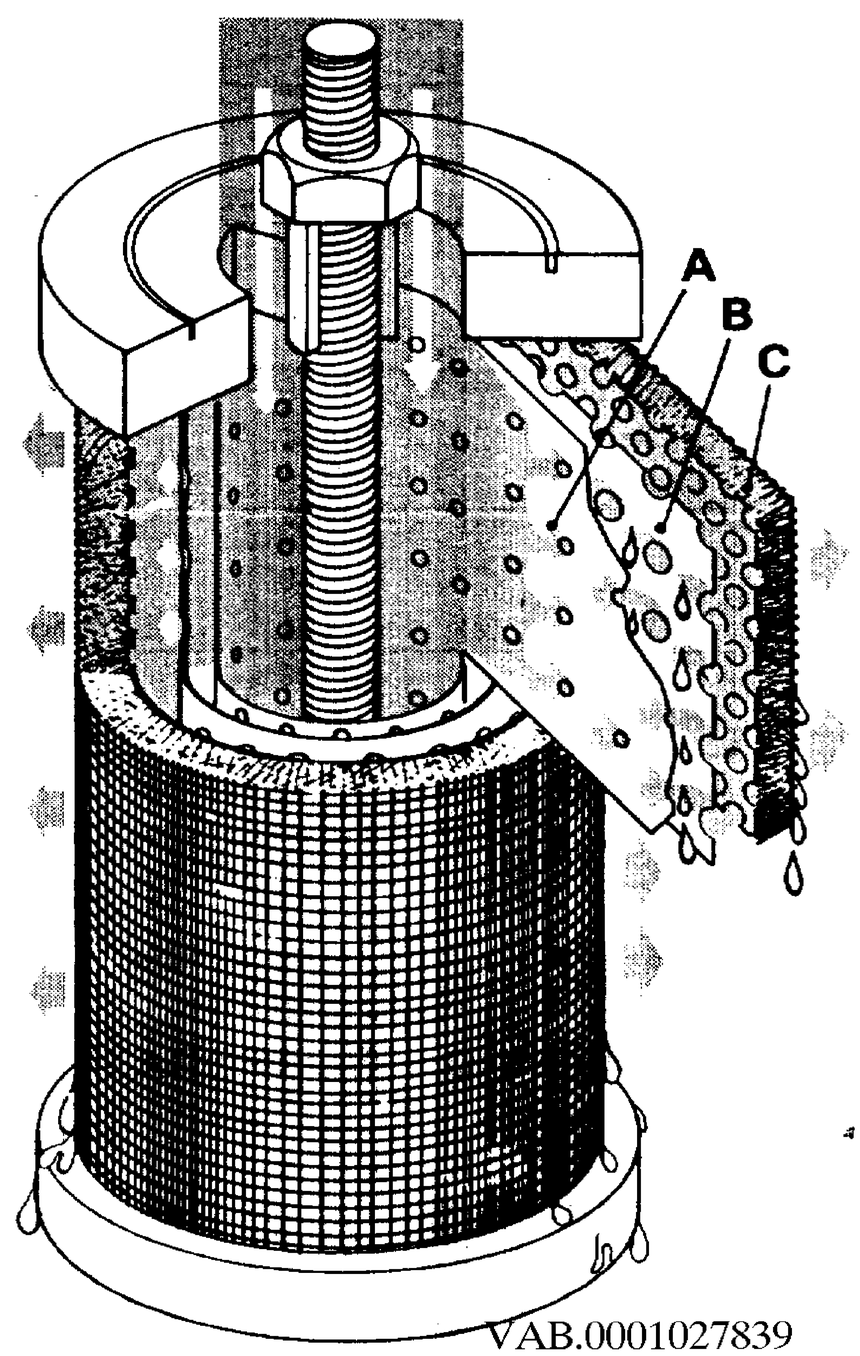

VAB.0001027839

Maximum Flow (SCFM)* at Various Inlet Pressures

MODEL NUMBER	20 PSIG 1.4 BAR	30 PSIG 2.1 BAR	40 PSIG 2.8 BAR	60 PSIG 4.1 BAR	80 PSIG 5.5 BAR	100 PSIG 6.9 BAR	120 PSIG 8.3 BAR	150 PSIG 10.3 BAR	200 PSIG 13.8 BAR	250 PSIG 17.3 BAR	300 PSIG 20.7 BAR
3401	4.5	5.9	7.2	9.8	12.4	15.0	17.6	21.5	28.1	34.6	41.2
3402	10.6	13.7	16.7	22.8	28.9	35.0	41.1	50.3	65.5	80.8	96.0
3403	16.7	21.5	26.2	35.8	45.3	55.0	64.6	79.0	103	127	151
3404	30.3	39.0	47.7	65.1	82.6	100	117	144	187	231	274
3405	60.6	78.0	95.4	130	165	200	235	287	374	462	549
3406	90.9	117	143	195	248	300	352	431	562	692	823
3407	182	234	286	391	496	600	704	862	1120	1380	1650
3408	364	468	572	781	991	1200	1410	1720	2250	2770	3290
3409	545	702	859	1170	1490	1800	2110	2580	3370	4150	4940
3410	727	936	1140	1560	1980	2400	2820	3450	4490	5540	6590
3411	909	1170	1430	1950	2480	3000	3520	4310	5620	6920	8230
3412	1450	1870	2290	3120	3970	4800	5640	6890	8990	11,100	13,200
3413	2000	2570	3150	4300	5450	6600	7750	9480	12,400	15,200	18,100
3414	2550	3280	4010	5470	6940	8400	9860	12,100	15,700	19,400	23,000
3415	3450	4450	5440	7420	9420	11,400	13,400	16,400	21,300	26,300	31,300

Note: Pressure Drop—Separator/Filter—At rated flow conditions, when removing liquids, pressure drop will be less than 1 PSI (.07 bar) nominal (1.6 PSI [.11 bar] for model 3406-1). Further pressure drop will occur only as the filter sleeve(s) become contaminated with solid particles. It is recommended that filter sleeve(s) be replaced for maximum filtration efficiency if pressure drop exceeds 10 PSI (0.7 bar).

*Convert SCFM to Metric Units as follows: 1 SCFM = .472 l n/s based on air measured at 68°F (20°C) and 29.92 in. (760 mm) Hg.

HANKISON CENTRIFLEX™ SEPARATOR/FILTERS

MODEL NUMBER		MAX. AIR FLOW (SCFM) @ 100 PSIG	AIR INLET/OUTLET CONNECTION	HOUSING (BOWL/VESSEL) TYPE	WIDTH (INLET TO OUTLET) & HEIGHT (INS.)	WT. (LBS.)	MAX. OPERATING PRESSURE (PSIG)		REPLACEMENT FILTER SLEEVE NO.
MANUAL DRAIN	AUTO DRAIN						MANUAL DRAIN	AUTO DRAIN	
3401-1		15	⅜" NPTF	8 oz. polycarbonate (1)	3¼ x 6¼	1¾	150		0734-1
3401-3		15	⅜" NPTF	8 oz. metal w/sight glass	3¼ x 6⅝	2⅝	300		0734-1
	3401-2	15	⅜" NPTF	16 oz. polycarbonate	3¼ x 10¼	2½		150	0734-1
	3401-4	15	⅜" NPTF	16 oz. metal	3¼ x 9⅞	3⅛		175	0734-1
3402-1	3402-2	35	⅜" NPTF	16 oz. polycarbonate	3¼ x 10¼	2½	150	150	0734-2
3402-3	3402-4	35	⅜" NPTF	16 oz. metal	3¼ x 9⅞	3⅛	300	175	0734-2
3402-5	3402-6	35	½" NPTF	16 oz. polycarbonate	3¼ x 10¼	2½	150	150	0734-2
3402-7	3402-8	35	½" NPTF	16 oz. metal	3¼ x 9⅞	3⅛	300	175	0734-2
3403-1	3403-2	55	¾" NPTF	32 oz. metal	4 9/16 x 11½	5⅞	300	175	0734-3
3403-3	3403-4	55	1" NPTF	32 oz. metal	4 9/16 x 11½	5⅞	300	175	0734-3
3404-1	3404-2	100	1" NPTF	48 oz. metal	4 9/16 x 13½	9⅜	300	175	0734-3
3405-1	(2)	200	1½" NPTF	136 oz. metal	5¼ x 22½	18	300	(2)	0734-5
3406-1	(2)	300	1½" NPTF	205 oz. metal	5¼ x 30½	21	300	(2)	0734-6
3407-1	(2)	600	2½" coupling (3)	5" pressure vessel	15¾ x 40½	29¾	200 (4)	(2)	0734-7
	3407-2	600	2½" coupling (3)	5" pressure vessel	15¾ x 42⅛	32¾		200 (4)	0734-7
3408-1	(2)	1200	3" coupling (3)	8" pressure vessel	22½ x 42¾	215	200 (4)	(2)	0734-72
3409-1	(2)	1800	3" flange	10" pressure vessel	16⅝ x 44 3/16	325	200 (4)	(2)	0734-73
3410-1	(2)	2400	4" flange	12" pressure vessel	20 x 51⅞	330	200 (4)	(2)	0734-74
3411-1	(2)	3000	4" flange	12" pressure vessel	20 x 51⅞	335	200 (4)	(2)	0734-75
3412-1	(2)	4800	6" flange	16" pressure vessel	24 x 52⅝	430	200 (4)	(2)	0734-78
3413-1	(2)	6600	6" flange	20" pressure vessel	28 x 59⅛	625	200 (4)	(2)	0734-711
3414-1	(2)	8400	6" flange (5)	20" pressure vessel	28 x 59⅛	630	200 (4)	(2)	0734-714
3415-1	(2)	11,400	8" flange (6)	24" pressure vessel	33 x 63 7/16	1150	200 (4)	(2)	0734-719

Max. Temp.—Temperatures in excess of 120°F (48.9°C) are not recommended since filtration efficiency may decrease. Polycarbonate bowls have a maximum operating temperature of 120°F.

(1) 8 oz. polycarbonate bowl also available with optional metal guard.

(2) Drain plugs standard on models 3405, 3406, 3407-1, and 3408 through 3415. For manual draining a valve is recommended. For automatic draining Hankison automatic drain traps are available. Model 3407-2 includes, as standard, an integral model 505 Trip-L-Trap®. For models 3405, 3406, and 3407-1 use Trip-L-Trap model 505. For models 3408 through 3415 use Trip-L-Trap model 506. Standard Trip-L-Traps have a maximum working pressure of 300 PSIG (20.7 bar)

(3) Flanges are available.

(4) Units with maximum operating pressures of 300 PSIG (20.7 bar) are available. 1200 SCFM (3408) and larger models are ASME code constructed and stamped.

(5) 8" flange connections available.

(6) 10" flange connections available.

HANKISON CORPORATION, Canonsburg, Pa. 15317, Phone (412) 745-1555, Telex: 81-2452, Cable: HANKORP

PRICE AND ORDERING INFORMATION AVAILABLE FROM:

GILBERT & ASSOCIATES, INC.
DISTRICT REPRESENTATIVES
3000 POPLAR AVENUE
MEMPHIS, TENN. 38157
(901) 767-7034

HANKISON®

VAB.0001027840

CONOCO

ENGINEERING CENTER

PONCA CITY, OKLAHOMA

SPECIFICATION SHEET

FILTER

A F E NO. _____

DATE 5/12/80 W O NO _____

MADE BY SBV INQ NO. _____

APP'D BY VF-III REQ NO. _____

B M NO _____ P O NO _____

PLANT ABERDEEN PVC PLANT PROJECT: BREATHING AIR MODIFICATIONS

ITEM NO

SERVICE

F-101 (CONT'D)

NOTES:

1) NORMAL FLOWRATE OF 24 SCFM BASED ON A BREATHING AIR USER IN PLASTICIZER, COMPOUND AND 2 IN THE V-10 DRYER BUILDING.

2) FILTER TO BE CHECKED AT LEAST ONCE A QUARTER FOR MAINTENANCE AND CARTRIDGE REPLACEMENT.

3) MODEL 3404-2 INCLUDED WITH DRAIN TRAP

4) F-101 TO DRAIN TO THE CONCRETE UNLOADING AREA EAST OF THE V-10 DRYER BUILDING. THE UNLOADING AREA IS SLOPED AND HAS PROPER DRAINAGE.

SHEET 2 OF 2 REV

VAB.0001027841

ENGINEERING CENTER

PONCA CITY, OKLAHOMA

SPECIFICATION SHEET

FILTER

A F E NO. _____
DATE 5/12/80 W O NO _____
MADE BY SBV INO NO. _____
APP'D BY VEM REQ NO. _____
B M NO _____ P O NO _____

PLANT ABERDEEN PVC PLANT PROJECT: BREATHING AIR MODIFICATIONS

ITEM NO
SERVICE FILTERS

ITEM NO.	F-102
SERVICE	BREATHING AIR
LOCATION	ON THE BREATHING AIR LINE NORTH OF THE NEW REACTOR MODULE
STREAM HANDLED	AIR
TEMP°F, NORMAL (DESIGN)	70 (100)
PRESSURE, PSIG NORMAL (DESIGN)	75 (85)
FLOWRATE, SCFM, NORMAL (DESIGN)	18 (50) (1)
DENSITY AT T AND P, lb/ft³	0.458
VISCOSITY AT T AND P	0.0185
MATERIAL Removed	CONDENSED WATER
ALLOWABLE CLEAN ΔP, PSI	2 PSIG
PARTICLE SIZE RETENSION, MICRON	10
MATERIAL OF CONSTRUCTION	
FILTER	C.S.
ELEMENT	FELT WOOL PADS

RECOMMENDED MODEL: HANKINSON 3404-2 OR COMPANY APPROVED EQUAL (3)

F-102 WILL FILTER CONDENSED WATER FROM THE BREATHING AIR FOR USE IN THE NEW REACTOR MODULE.

SHEET 1 OF 2 REV

CONOCO

ENGINEERING CENTER

PONCA CITY, OKLAHOMA

SPECIFICATION SHEET

A.F.E. NO. _____

DATE 5/12/80 W.O. NO _____

MADE BY SBV INQ NO. _____

APP'D BY VEW REQ. NO. _____

B.M. NO _____ P.O. NO. _____

PLANT Aberdeen RIC Plant PROJECT: Breathing Air Modifications

ITEM NO

SERVICE

F-102 (CONT'D)

NOTES:

(1) NORMAL FLOWRATE BASED ON THREE USERS IN THE NEW REACTOR MODULE.

(2) FILTER TO BE INSPECTED AT LEAST ONCE PER QUARTER TO CHECK FOR POSSIBLE MAINTENANCE AND CARTRIDGE REPLACEMENT.

(3) MODEL 3404-2 INCLUDED WITH DRAIN TRAP

(4) F-102 TO DRAIN TO THE DRAIN LINE AT THE WESTERN MOST SEAL H_2O HEAT EXCHANGER CONOCO NO. FOR THE HEAT EXCHANGER IS 55-334.

SHEET 2 OF 2

ENGINEERING CENTER

PONCA CITY, OKLAHOMA

SPECIFICATION SHEET

FILTER

A F E NO. _____
DATE 5/12/80 W O NO _____
MADE BY SBV INQ NO _____
APP'D BY VVM REQ NO. _____
B M NO _____ P O NO _____

PLANT Aberdeen PVC Plant PROJECT: Breathing Air Modifications

ITEM NO	
SERVICE	FILTERS
ITEM NO.	F-103
SERVICE:	BREATHING AIR
LOCATION:	INSIDE THE V-11 DRYER
	ON THE BREATHING AIR LINE
	BEFORE THE 1" BRANCH TO THE
	SLURRY BLEND TANK (T-407 AND T-501)
STREAM HANDLED	AIR
TEMP °F, NORMAL (DESIGN)	70, (100)
PRESSURE, PSIG NORMAL (DESIGN)	75 (85)
FLOWRATE, SCFM NORMAL (DESIGN)	12 (50)(1)
DENSITY AT T AND P, lb/ft³	0.458
VISCOSITY AT T AND P, CP	0.085
MATERIAL REMOVED	CONDENSED WATER
ALLOWABLE CLEAN ΔP, PSI	2
PARTICLE SIZE RETENTION, MICRON	10
MATERIAL OF CONSTRUCTION	
FILTER	C.S.
ELEMENT	FELT

RECOMMENDED MODEL: HANKINSON 3904-20 or Company Approved Equal (3)

F-103 WILL FILTER CONDENSED WATER FROM THE BREATHING AIR FOR USE TO THE V-11 DRYER BUILDING AND THE SLURRY BLEND TANKS.

SHEET 1 OF 2

CONOCO

ENGINEERING CENTER

PONCA CITY, OKLAHOMA

SPECIFICATION SHEET

A F E NO. _____
DATE 5/12/80 W O NO _____
MADE BY SBV INQ NO _____
APP'D BY VCD REQ NO. _____
B M NO _____ P O NO _____

PLANT ABERDEEN RIC PLANT PROJECT: BREATHING AIR MODIFICATIONS

ITEM NO
SERVICE

F-103 (CONT'D)

NOTES:

1) NORMAL FLOWRATE OF 12 SCFM BASED ON TWO SIMULTANEOUS USERS AT THE V-11 DRYER BUILDING.

(2) FILTER TO BE INSPECTED AT LEAST ONCE PER QUARTER TO CHECK FOR POSSIBLE MAINTENANCE AND FILTER REPLACEMENT.

(3) MODEL 3404-2 INCLUDED WITH DRAIN TRAP

(4) F-103 TO DRAIN TO THE DRAIN SOUTH OF SMALL BLEND TANKS 653 AND 652

SHEET 2 OF 2

CONOCO

ENGINEERING CENTER

PONCA CITY, OKLAHOMA

SPECIFICATION SHEET

FILTER

A F E NO. _____
DATE 5/28/80 W O NO _____
MADE BY SBV INQ NO _____
APP'D BY VEM REQ NO. _____
B M NO _____ P O NO _____

PLANT ABERDEEN AIC PLANT PROJECT: BREATHING AIR MODIFICATIONS

ITEM NO
SERVICE COALESCING FILTER

ITEM NO.	F-104
SERVICE:	BREATHING AIR
LOCATION:	BREATHING AIR LINE TO THE V-11 DRYER BAGHOUSES
STREAM HANDLED	AIR
TEMP °F, NORMAL (DESIGN)	70 (100)
PRESSURE PSIG, NORMAL (DESIGN)	75 (85)
FLOWRATE, SCFM NORMAL (DESIGN)	12 (50) (1)
DENSITY AT T AND P, lb/ft³	0.458
VISCOSITY CP (AT T AND P)	0.0185
MATERIAL REMOVED	CONDENSED WATER
ALLOWABLE CLEAN ΔP, PSI	2
PARTICLE SIZE RETENTION, MICRON	10
MATERIAL OF CONSTRUCTION	
FILTER	C.S.
ELEMENT	FELT

RECOMMENDED MODEL: HANKINSON 3404-2 OR COMPANY APPROVED EQUAL

F-104 WILL FILTER CONDENSED WATER FOR USE AT THE V-11 BAGHOUSES.

SHEET 1 OF 2 REV B

VAB.0001027346

CONOCO

ENGINEERING CENTER

PONCA CITY, OKLAHOMA

SPECIFICATION SHEET

FILTER

A F E. NO. _____

DATE 5/28/80 W O NO _____

MADE BY SJV INO NO _____

APP'D BY _____ REQ NO. _____

B M NO _____ P O NO _____

PLANT ABERDEEN PVC PLANT PROJECT: BREATHING AIR MODIFICATIONS

ITEM NO

SERVICE COALESCING FILTER

NOTES:

(1) FILTER TO BE INSPECTED ONCE PER QUARTER FOR POSSIBLE MAINTENANCE AND CARTRIDGE REPLACEMENT

(2) F-104 TO DRAIN TO SUMP LOCATED NORTH OF THE CHILLER BUILDING.

(3) MODEL 3404-2 INCLUDED WITH DRAIN TRAP

SHEET 2 OF 2 REV. 0

ENGINEERING CENTER

PONCA CITY, OKLAHOMA

SPECIFICATION SHEET

A F E NO. _____
DATE 5/12/80 W O NO _____
MADE BY SBV INQ NO. _____
APP'D BY [illegible] REQ NO. _____
B M NO _____ P O NO _____

PLANT ABERDEEN RIC PLANT PROJECT: BREATHING AIR MODIFICATIONS

ITEM NO	
SERVICE	FILTER
ITEM NO.	F-105
SERVICE	BREATHING AIR
LOCATION:	BREATHING AIR LINE ACROSS
	THE RAILROAD TRACKS AT THE VCM
	TANK FARM THAT RUN TO THE VCM
	SPHERE AND BULLETS
STREAM HANDLED	AIR
TEMP °F, NORMAL (DESIGN)	70(100)
PRESSURE, PSIG NORMAL (DESIGN)	75(85)
FLOWRATE, SCFM NORMAL (DESIGN)	12 (50) (1)
DENSITY AT T AND P, lb/ft³	0.458
VISCOSITY AT T AND P, CP	0.0185
MATERIAL REMOVED	CONDENSED WATER
ALLOWABLE CLEAN ΔP, PSI	2
PARTICLE SIZE RE: EN SION, MICRON	10
MATERIAL OF CONSTRUCTION	
FILTER	C.S.
ELEMENT	FELT WOOL PADS

RECOMMENDED MODEL: HANCINSON 3404-2 OR COMPANY APPROVED EQUAL (3)

SHEET 1 OF 2 REV

CONOCO

ENGINEERING CENTER

PONCA CITY, OKLAHOMA

SPECIFICATION SHEET

A F E NO. _____
DATE 5/12/80 W O NO _____
MADE BY SJBV INO NO _____
APP'D BY VKM REQ NO. _____
B M NO _____ P O NO _____

PLANT ABERDEEN PVC PLANT PROJECT: BREATHING AIR MODIFICATIONS

ITEM NO
SERVICE

F-105 (CONT'D)

(1) NORMAL FLOWRATE OF 12 SCFM BASED ON 2 BREATHING AIR USERS AT THE VCM TANK FARM.

(2) FILTER TO BE INSPECTED AT LEAST ONCE PER QUARTER FOR POSSIBLE MAINTENANCE AND CARTRIDGE REPLACEMENT.

(3) MODEL 3404-2 INCLUDED WITH DRIPIN TRAP

(4) F-105 TO DRAIN TO DRAIN LOCATED WEST OF RAILROAD TRACKS AT THE VCM TANK FARM AND NORTH OF THE VCM TANK FARM.

SHEET 2 OF 2

ENGINEERING CENTER

PONCA CITY, OKLAHOMA

SPECIFICATION SHEET

AFE NO ____ DATE 7/24/86 R.O. NO ____ MADE BY SBV INQ NO ____ APP'D BY VFN REQ NO ____ B.M. NO ____ P.O. NO ____

PLANT ABERDEEN PVC PLANT PROJECT: BREATHING AIR MODIFICATIONS

ITEM NO

SERVICE INTERNAL MESH PAD - MP-101

ITEM NO.: - MP-101

SERVICE: MIST REMOVAL FROM THE COMPRESSED BREATHING AIR AS IT EXITS FROM THE AIR-WATER SEPARATOR WS-101.

LOCATION: 6 INCHES FROM TOP OF THE VERTICAL AIR WATER SEPARATOR. THE MESH PAD IS TO BE HORIZONTALLY IN THE SEPARATOR

OPERATING CONDITIONS:

TEMP. °F,	NORMAL (DESIGN)	90 (100)
PRESSURE, PSIG	NORMAL (DESIGN)	75 (85)

STREAM HANDLED:

FLUID:	AIR
FLOWRATE: lb/hr	514.0
MOLECULAR WEIGHT:	29
VISCOSITY, CP	0.019
DENSITY, lb/ft³	0.442
FLOWRATE (ACFS)	0.323

MATERIAL REMOVED: WATER MIST

SHEET 1 OF 2 REV 0

ENGINEERING CENTER

PONCA CITY, OKLAHOMA

SPECIFICATION SHEET

A F E NO _____
DATE 7/24/80 W O NO _____
MADE BY SBV INO NO _____
APP D BY VEN REQ NO _____
B M NO _____ P O NO _____

PLANT ABERDEEN PIC PLANT PROJECT: BREATHING AIR MODIFICATIONS

ITEM NO
SERVICE INTERNAL MESH PAD CONT'D

ALLOWABLE CLEAN ΔP, INCHES H2O	10
PARTICLE RETENSION, MICRON	10
MATERIAL OF CONSTRUCTION	POLYPROPELENE

SHEET 2 OF 2 REV 0

BREATHING AIR MODIFICATIONS

CLASS "A" DESIGN

ABERDEEN PVC PLANT

V. INSTRUMENT SPECIFICATIONS

Item No.	Service	Location
CV-101	Control Valve	1-AU-103
PG-101	Pressure Gauge	F-5 Reactor
PG-102	Pressure Gauge	1-AI-105
PG-103	Pressure Gauge	1-AI-113
PG-104	Pressure Gauge	1-AI-109
PG-105	Pressure Gauge	1-AI-117
PG-106	Pressure Gauge	1-AI-119
PG-107	Pressure Gauge	WS-101
SV-101	Safety Valve	WS-101
TG-101	Temperature Gauge	WS-101

ENGINEERING CENTER

PONCA CITY, OKLAHOMA

SPECIFICATION SHEET

CONTROL VALVES

DATE 5/12/80 B. M. NO. _____

A. F. E. NO. _____

W. O. NO. _____ INQ. NO. _____

REQ. NO. _____ P. O. NO. _____

MADE BY SBV APP'D BY VEM

PLANT ABERDEEN RIC PLANT PROJECT BREATHING AIR MODIFICATIONS

	GENERAL												
1	ITEM NO & TAG			CV-101									
2	SERVICE			DRAIN VALVE FOR WS-101									
3	LINE SIZE			1"									
4	MANUFACTURER												
5	MODEL NO.												
6	LOCATION			1-AU-103									
	SERVICE CONDITIONS												
7	FLUID			WATER									
8	TEMP F	NORMAL	MAX.	80	90								
9	PRESS., INLET,	NORMAL	MAX.	75	85								
10	Δ P MIN.	NORMAL	MAX.										
11	MOLECULAR WEIGHT		A.P.I.	18									
12	SP GR @ 60 F.		@ F.T.	1.0	0.995								
13	WEIGHT : VAPOR IN		OUT	0	0								
14	VISCOSITY @ F.T. & P.			0.90 CP									
15	RATE. NOR. LB HR. (SCFH) GPM												
16	RATE MAX. LB HR (SCFH) GPM												
17	NORMAL FLOW Cv												
18													
	BODY												
19	BODY SIZE	PORT SIZE		1"	RED								
20	TYPE (ANGLE OR GLOBE)			BALL									
21	MATERIAL			CS.									
22	END CONNECTIONS			150# R.F.									
23	BONNET												
24	Cv												
25	LUBRICATOR	ISO VAL											
26	PACKING												
27	TRAVEL INDICATOR												
28													
	TRIM												
29	TYPE INNER VAL.	NO OF PORTS											
30	PLUG & SEAT MATERIAL												
31													
	ACTUATOR												
32	TYPE			PNEU									
33	FAILURE POSITION			OPEN									
34	MANUFACTURER			BETTIS									
	POSITIONER												
35	INPUT SIGNAL	OUTPUT SIGNAL											
36	BYPASS	GAUGES											
37	MANUFACTURER												
38	MODEL NO.												
	ACCESSORIES												
39													

NOTES

( ) INDICATES ITEM CHANGED ON LATEST REVISION.

(X) INDICATES MANUFACTURER TO GIVE REQUESTED INFORMATION IN HIS QUOTATION.

SHEET 1 OF 1 REV. 0

VAB.0001027853

4-435-S

REV 7 24 69

ENGINEERING CENTER

PONCA CITY, OKLAHOMA

SPECIFICATION SHEET

RELIEF VALVES

A.F.E NO. ____
DATE 5/12/80 W. O. NO ____
MADE BY SBV INQ. NO ____
APP'D BY VBK REQ. NO ____
B. M. NO. ____ P. O NO ____

PLANT ABERDEEN PVC PLANT PROJECT BREATHING AIR MODIFICATIONS

	GENERAL								
1	ITEM NO. & TAG		SV-101						
2	RELIEVES EQUIPMENT NO.		VS-101						
3	MANUFACTURER		CONSOLIDATED						
4	MODEL NO.								
5									
	SERVICE CONDITIONS								
6	FLUID		AIR						
7	STATE		GAS						
8	REQUIRED CAPACITY								
9	MOL. WT.	SP. GR.	28.9						
10	VISCOSITY								
11	COMPRESSIBILITY FACTOR								
12	DESIGN PRESS. OF EQUIPMENT		85						
13	PRESS OPERATING	RELIEVING	75	85					
14	TEMP FLOWING	RELIEVING	90	255.5					
15	BACK PRESSURE		ATMOSPHERE						
16	DIFFERENTIAL SET PRESSURE		85 PSIG						
17	ACCUMULATION %								
18	BLOW DOWN %								
19									
	BASIS OF SELECTION								
20	CODE REQUIREMENT								
21	FIRE EXPOSED AREA								
22	FIRE INSULATION THICKNESS								
23	OTHER BASIS								
24									
	DESIGN DETAILS								
25	DESIGN TYPE								
26	SEAT TYPE								
27	BONNET (OPEN OR CLOSED)		CLOSED						
28	INLET SIZE, RATING, FACING		1" 150# R.F						
29	OUTLET SIZE, RATING, FACING		2" 150# RF						
30	CALCULATED AREA		0.181 in²						
31	ORIFICE LETTER	ACTUAL AREA	E	0.196 in²					
	MATERIALS								
32	BODY	BONNET	CS	CS					
33	SEAT & DISK								
34	GUIDE & RING								
35	SPRING		CS						
36	BELLOWS								
	ACCESSORIES								
37	LIFTING LEVER (PLAIN OR PACKED)								
38	GAG								
39	CODE STAMP								
40	CAP (SCREWED OR BOLTED)								
41	OTHER								

NOTES

MANUFACTURER SHALL VERIFY SELECTION OF ORIFICE SIZE AND MATERIALS.
VALVES SHALL MEET DIMENSION REQUIREMENTS OF API RP-526.
VALVES SHALL MEET TEST REQUIREMENTS OF API RP-527

SUPPLIER TO COMPLETE FORM BY FURNISHING INFORMATION FOR BLANK SPACES

SHEET 1 OF 1 REV.

VAB.0001027854

4-436-S

REV. 12/...

ENGINEERING CENTER

PONCA CITY, OKLAHOMA
SPECIFICATION SHEET
PRESSURE GAUGES

A.F.E. NO. _____
DATE 5/12/80 W.O. NO. _____
MADE BY SRV INQ. NO. _____
APP'D BY VEM REQ. NO. _____
B.M. NO. _____ P.O. NO. _____

PLANT ABERDEEN RIC PLANT PROJECT: BREATHING AIR MODIFICATIONS

1	TAG		INSTRUMENT	OPERATING	OPERATING	
2	NO.	SERVICE	RANGE, PSIG	PRESS, PSIG	TEMP., °F	LOCATION
3	PG-101	Pressure Gauge	0-150 #	75	80	F-5 REACTOR
4	PG-102	Pressure Gauge	0-5 #	75	70	1-AI-105
5	PG-103	Pressure Gauge	0-5 #	75	70	1-AI-113
6	PG-104	Pressure Gauge	0-5#	75	70	1-AI-109
7	PG-105	Pressure Gauge	0-5#	75	70	1-AI-117
8	PG-106	Pressure Gauge	0-5#	75	70	1-AI-121
9	PG-107	Pressure Gauge	0-150	75	90	WS-101
10						
11						
12						
13						
14						
15						
16						
17						
18						
19						
20						
21						
22						
23						
24						
25						
26						
27						
28						
29						
30						
31						
32						
33						
34						
35						
36						
37						
38						
39						
40						
41	NOTE:					
42	1) PG-102 THRU PG-106 TO BE					
43	MAGNEHELLIC DIFFERENTIAL PRESSURE GAUGE					
44	(SERIES 2000 HIGH PRESSURE CONSTRUCTION)					
45						
46						
47						
48						
49						
50						
51						
52						
53						
54						
55						
56						

QUOTATION WILL NOT BE CONSIDERED IF SUPPLIER DOES NOT COMPLETE RIGHT HAND COLUMN.

SHEET 1 OF 1 REV 0

VAB.0001027855

ENGINEERING CENTER

PONCA CITY, OKLAHOMA

SPECIFICATION SHEET

TEMPERATURE GAUGES

A.F.E. NO ____ W.O. NO ____

DATE 5/21/80 INQ. NO ____

MADE BY SBV REQ. NO ____

APP'D BY VPTA P.O. NO ____

B.M. NO ____

PLANT Aberdeen PVC Plant PROJECT: Breathing Air Modifications

	TAG NO.	SERVICE	INSTRUMENT RANGE, °F (1)	OPERATING TEMP, °F	LOCATION
1					
2					
3	TG-101	Temperature Gauge	0-200	90	WS-101
4					
5					
6					
7					
8					
9					
10					
11					
12					
13					
14					
15					
16					
17					
18					
19					
20					
21					
22					
23					
24					
25					
26					
27					
28					
29					
30					
31					
32					
33					
34					
35					
36					
37					
38					
39					

40 (1) ALL GAUGE ELEMENTS TO BE BIMETALLIC UNLESS OTHERWISE NOTED.

41
42
43
44
45
46
47
48
49
50
51
52
53
54
55
56

QUOTATION WILL NOT BE CONSIDERED IF SUPPLIER DOES NOT COMPLETE RIGHT HAND COLUMN.

VAB.0001027856

SHEET 1 OF 1 REV. 0

BREATHING AIR MODIFICATIONS

CLASS "A" DESIGN

ABERDEEN PVC PLANT

VI. PROCESS PIPING SCHEDULE

The following piping schedule uses a system of numbers and letters as a line designation. This system denotes the following information: line size, service, line number, insulation requirements, and piping specification.

Sample Line Description

2-AI-101-N-M2-1

- Piping Specification
- Insulation Requirement
- Line Number
- Service
- Nominal Line Size, Inches

Sample Piping Specification

M2-1

- First Specification of M2 Group
- Piping Material
- Nominal Pressure Rating

Service Description Used	Service
AU	Utility
AI	Breathing Air

Insulation Requirements

N	No Insulation
E	Electric Traced and Insulated

Nominal Pressure Rating

M	125 Pound Class

Piping Material

1	Carbon Steel

PROCESS PIPING SCHEDULE
PROCESS ENGINEERING DEPARTMENT

Date 5/12/80 Made By SBV
Project BREATHING AIR MODIFICATIONS
Plant ABERDEEN PIC PLANT

Line Designation	Service From	Service To	V L	Flow Rate Lb/Hr (Hot BPSD)	Normal °F	Normal PSIG	At T and P Lb/CF	At T and P Visc Cp	Press Drop PSI/100'	Velocity Ft/Sec	Remarks
2-AI-101-N-M2-1	C-101 & C-102 OUTLET	WS-101	V	112 SCFM	90	75	0.442	0.0185	0.119	80.11	
2-AI-102-N-M2-1	WS-101	BREATHING AIR HEADER	V	112 SCFM	80	75	0.449	0.0185	0.119	80.11	
1-AU-103-E-M2-1	WS-101	DRAIN	L	—	80	75	62.22	0.90	—	—	
1-AU-104-E-M2-1	F-5 REACTOR	DRAIN	L	—	70	75	62.30	1.01	—	—	
1-AI-105-N-M2-1	EXISTING BREATHING AIR LINE	F-101	V	24 SCFM	70	75	0.458	0.0185	0.212	66.67	
1-AI-106-N-M2-1	F-101	BREATHING AIR LINE TO V-10, PLASTICIZING COMP.	V	24 SCFM	70	75	0.458	0.0185	0.212	66.67	
1-AI-107-N-M2-1	1-AI-105	1-AI-106	V	24 SCFM	70	75	0.458	0.0185	0.212	66.67	F-101 BYPASS
1/2-AU-108-E-M2-1	F-101	DRAIN	L	—	70	75	62.30	1.01	—	—	F-101 DRAINLINE
1-AI-109-N-M2-1	BREATHING AIR LINE TO V-11 DRYERS	F-103	V	12 SCFM	70	75	0.458	0.0185	.084	33.33	
1-AI-110-N-M2-1	F-103	V-11 DRYER BLG. & SLURRY BLEND TANK	V	12 SCFM	70	75	0.458	0.0185	.084	33.33	
1-AI-111-N-M2-1	1-AI-109	1-AI-110	V	12 SCFM	70	75	0.458	0.0185	.084	33.33	F-103 BYPASS
1/2-AU-112-E-M2-1	F-103	DRAIN	L	—	70	75	62.3	1.01	—	—	F-103 DRAINLINE
1-AI-113-N-M2-1	BREATHING AIR LINE TO THE NEW RX MODULE	F-102	V	18 SCFM	70	75	0.458	0.0185	0.113	50.0	
1-AI-114-N-M2-1	F-102	NEW RX MODULE	V	18 SCFM	70	75	0.458	0.0185	0.113	50.0	
1-AI-115-N-M2-1	1-AI-113	1-AI-114	V	18 SCFM	70	75	0.458	0.0185	0.113	50.0	F-102 BYPASS
1/2-AU-116-[illegible]-M2-1	F-102	DRAIN	L	—	70	75	62.3	1.01	—	—	F-102 DRAINLINE
1-AI-117-N-M2-1	F-104	BREATHING AIR LINE TO V-11 BAGHOUSES	V	12 SCFM	70	75	0.458	0.0185	0.784	33.25	
1-AI-118-N-M2-1	BREATHING AIR HEADER	F-104	V	12 SCFM	70	75	0.458	0.0185	0.784	33.25	
1-AI-119-N-M2-1	1-AI-117	1-AI-118	V	12 SCFM	70	75	0.458	0.0185	0.784	33.25	F-104 BYPASS.
1/2-AU-[illegible]-E-M2-1	F-104	DRAIN	L	—	70	75	62.3	1.01	—	—	F-104 DRAINLINE

VAB.0001017858

PROCESS PIPING SCHEDULE
PROCESS ENGINEERING DEPARTMENT

Date 5/12/80 Made By SBV
Project BREATHING AIR MODIFICATIONS
Plant ABERDEEN PVC PLANT

Line Designation	Service From	Service To	V L	Flow Rate Lb/Hr (Hot BPSD)	Normal °F	Normal PSIG	At T and P Lb/CF	At T and P Visc Cp	Press Drop PSI/100'	Velocity Ft/Sec	Remarks
1-AI-121-N-M2-1	BREATHING AIR LINE FROM E-5 REACTOR	E-105	V	12 SCFM	70	75	0.458	0.085	.084	33.33	
1-AI-122-N-M2-1	E-105	VCM SPHERE AND BULLETS	V	12 SCFM	70	75	0.458	0.085	0.084	33.33	
1-AI-123-N-M2-1	1-AI-121	1-AI-122	V	12 SCFM	70	75	0.458	0.085	0.084	33.33	E-105 BYPASS
½-AU-124-E-M2-1	E-105	DRAIN	L	—	70	75	62.3	101	—	—	E-105 DRAINLINE

VAB.0001027859

BREATHING AIR MODIFICATIONS

CLASS "A" DESIGN

ABERDEEN PVC PLANT

VII. WORK LIST

1. Remove existing air water separator and air receiver from the breathing air station.

2. Remove the activated carbon from the existing F-5 reactor, and clean the inside of the existing reactor.

3. Fabricate and install the new air water separator, WS-101. Insulate and electric trace the bottom of the separator.

4. Tie outlet from existing compressors, C-101 and C-102, to line 2-AI-101, inlet to WS-101.

5. Tie line 2-AI-102, outlet from WS-101, to the existing three inch breathing air header.

6. Relocate low pressure switch, PSL-101 into existing local control box.

7. Install control valve, CV-101, on the drain line, 1-AU-103, from WS-101, and tie drain line into the existing drain at the north end of the compressor station.

8. Reconnect the alarm horn at the local control box and tie in instrument leads from C-101 and C-102.

9. Install coalescing filters F-101, F-102, F-103, F-104, and F-105 on the different breathing air branches. (See Figure 2).

10. Install air bleeding points in the breathing air system. (See Figure 2)

11. Install drain trap, TP-101, on the existing F-5 reactor.

12. The existing level control leg at the breathing air station is to be insulated and relocated to the new air water separator, WS-101.

13. Insulate and electric trace the level control leg from WS-101.

14. Insulate and electrice trace the bottom half of the air water separator, WS-101.

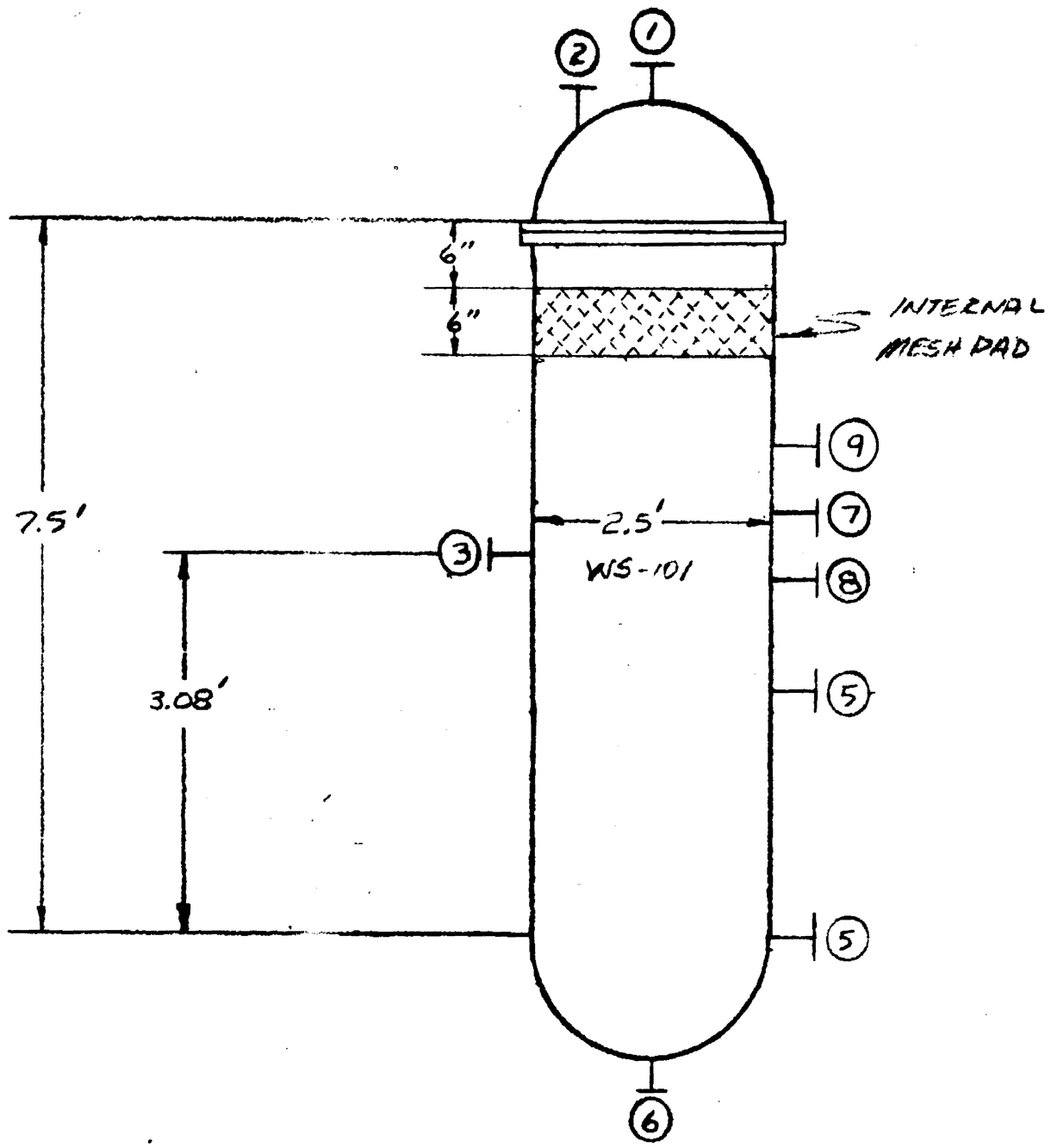

NOZZLE SCHEDULE

MARK NO.	NO. REQ.	SIZE	TYPE	SERVICE
1	1	2"	R.F.	VAPOR OUTLET
2	1	1½"	R.F.	SV-101
3	1	2"	R.F.	WS-101 INLET
4				
5	2	1½"	R.F.	LEVEL LEG CONNECTIONS
6	1	1½"	R.F.	LIQUID OUTLET
7	1	1½"	R.F.	TEMPERATURE GAUGE
8	1	1½"	R.F.	PRESSURE GAUGE
9	1	1½"	R.F.	PSL-101
10				
11				
12				
13				
14				
15				
16				
17				
18				
19				
20				

ISU	DATE	DESCRIPTION	BY	CKD	APD
	5/12/80	PROCESS DESIGN	SBV		VEM

DESIGN DATA

OPERATING TEMP. °F	90
DESIGN TEMP. °F	100
OPERATING PSIG.	[illegible]
DESIGN PSIG.	50
INSULATION:	
[redacted] FREEZE PROTECTION	(✓)
HEAT CONSERVATION	( )
NONE	( )
CORROSION ALLOWANCE	0.125 IN
MAT'L OF CONST.	CS

NOTES

(1) WS-101 TO HAVE AN INTERNAL MESH PAD 6 INCHES THICK

(2) HEIGHT ABOVE MESH PAD TO BE SIX INCHES.

(3) WS-101 TO BE ASME CODE STAMPED.

(4) WS-101 TO HAVE TUBE TURNED HEAD.

(5) THE BOTTOM HALF OF WS-101 TO BE INSULATED AND ELECTRIC TRACED

(6) CONNECTIONS FROM WS-101 TO THE LEVEL LEG AND THE LEVEL LEG ITSELF TO BE INSULATED AND ELECTRIC TRACED.

CONOCO CHEMICALS

ABERDEEN MISSISSIPPI

BREATHING AIR MODIFICATIONS
NOZZLE DIAGRAM FOR WS-101
FIGURE 8

APPD: U.G. Meadick
DATE: 5/21/80

No.

VAB.0001027861

VAB.0001027862

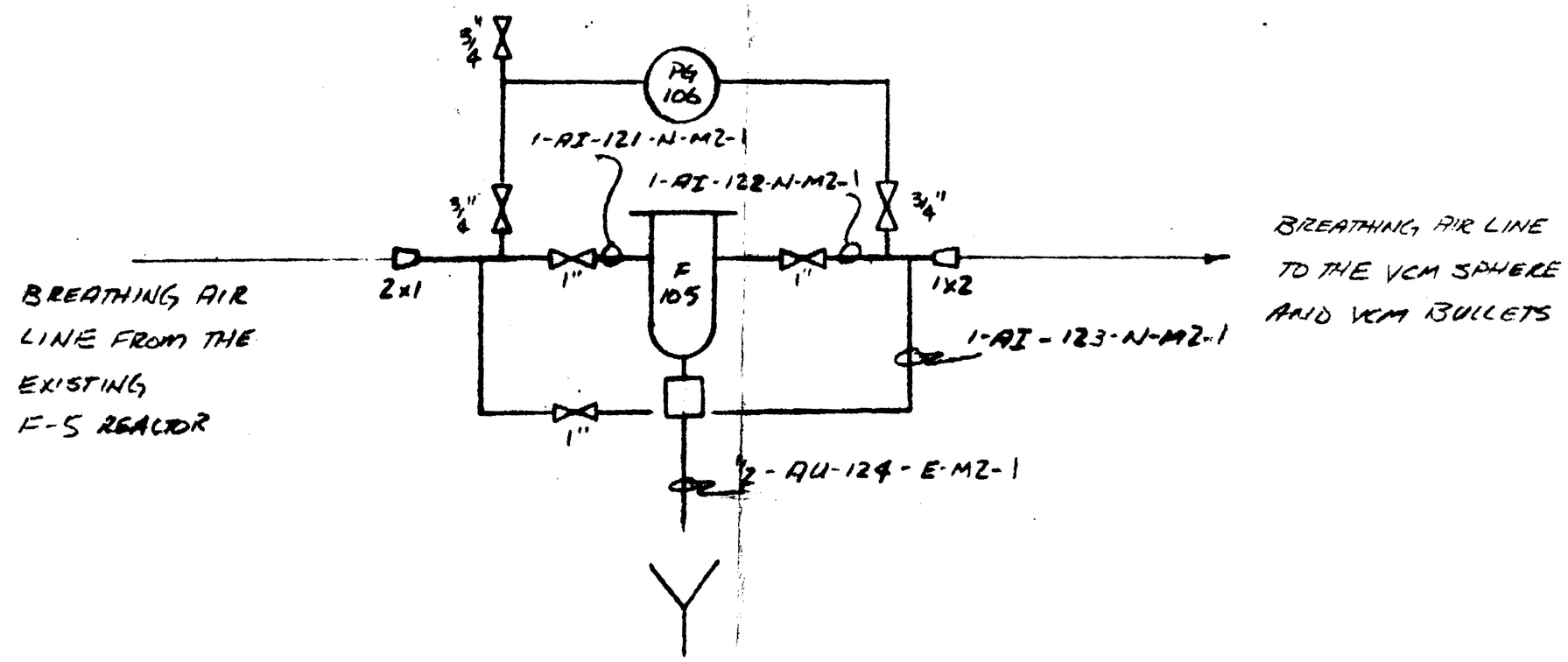

NOTES:

(1) F-105 TO BE HANKINSON MODEL 3404-2. THIS MODEL HAS AN INTERNAL DRAIN TRAP

(2) F-105 TO DRAIN TO A LOCAL DRAIN SOUTH OF THE VCM TANK FARM AND WEST OF THE RAILROAD TRACK

AFE

ISU	DATE	DESCRIPTION	BY	CKD	A
	5/11/80	PROCESS DESIGN	SBW		VF

CONOCO CHEMICALS

ABERDEEN MISSISSIPPI

BREATHING AIR MODIFICATIONS
P&I DIAGRAM FOR F-105 INSTALLATION
FIGURE 7

SCALE: NTS

APPD: V. E. Messick
DATE: 5/21/80

No.

DRAWING 40-E34 291377-6

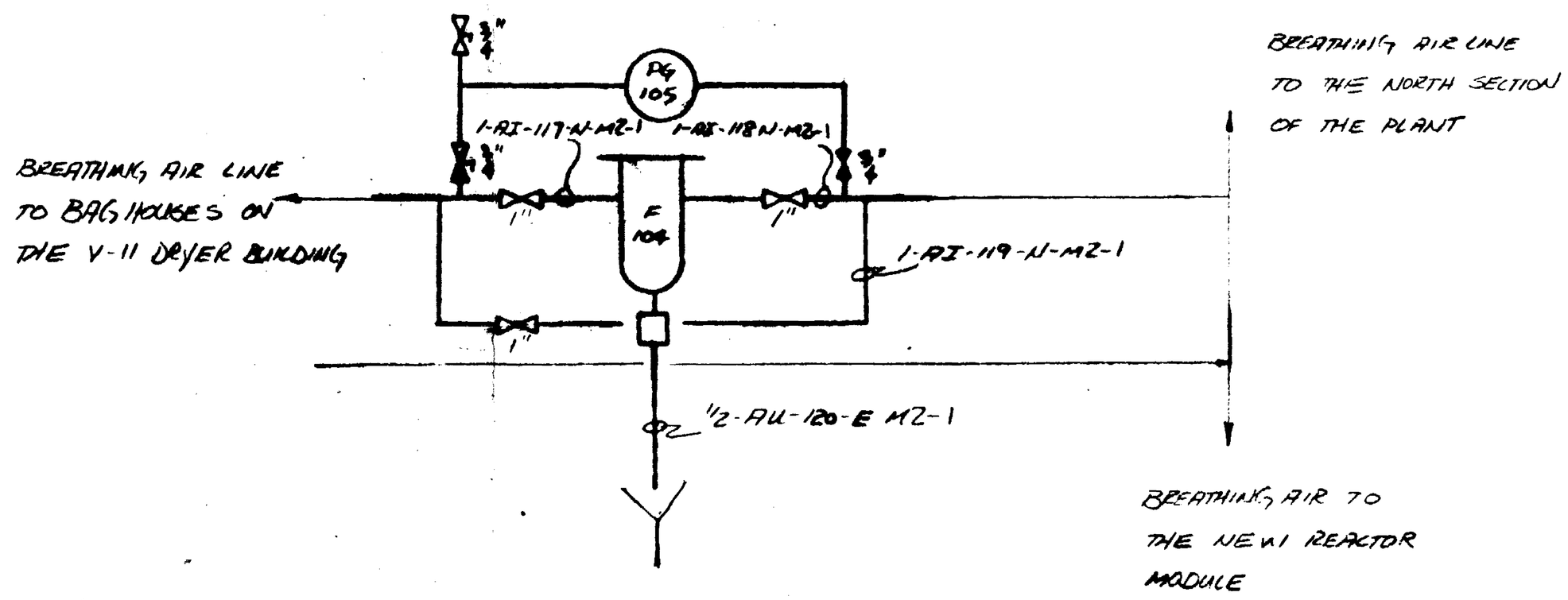

NOTE:

1) F-104 TO BE HANKINSON 3404-Z WHICH INCLUDES A DRAIN TRAP
2) F-104 TO DRAIN TO THE SUMP LOCATED NORTH OF THE REFRIGERATION BUILDING.

AFE

ISU	DATE	DESCRIPTION	BY	CKD	APD
	5/11/80	PROCESS DESIGN	SBV		VEM

CONOCO CHEMICALS

ABERDEEN MISSISSIPPI

BREATHING AIR MODIFICATIONS
P&I DIAGRAM FOR F-104 INSTALLATION
FIGURE 6

SCALE: NTS

APPD: V. E. Messick
DATE: 5/21/80

No.

AB.0001027863

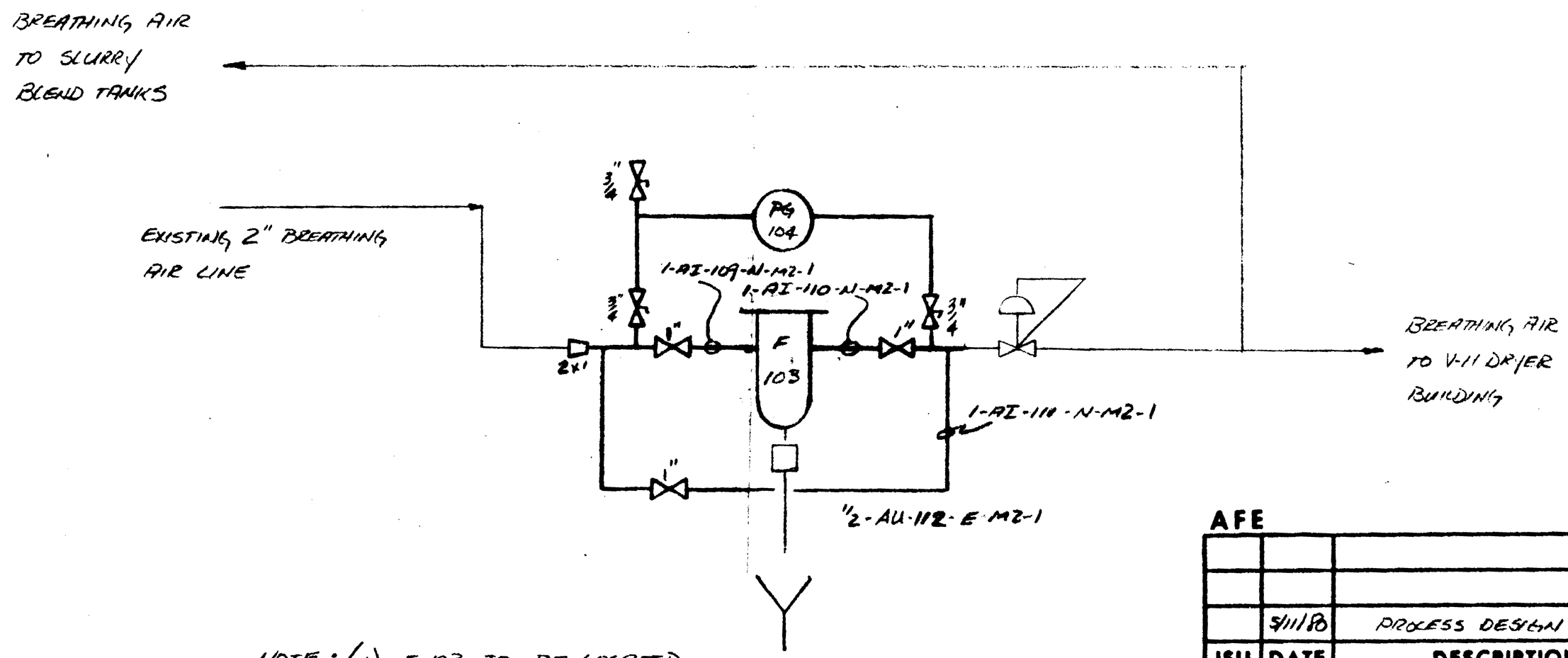

NOTE: (1) F-103 TO BE LOCATED JUST INSIDE THE WEST END OF THE V-11 DRYER BUILDING. (SEE FIGURE 2)

(2) F-103 TO BE HANKINSON MODEL 3404-2 WITH INTERNAL TRAP.

(3) F-103 TO DRAIN TO THE DRAIN SOUTH OF SMALL BLEND TANKS 652 AND 652

AFE

ISU	DATE	DESCRIPTION	BY	CKD	APD
	5/11/80	PROCESS DESIGN	SBY		VEM

CONOCO CHEMICALS

ABERDEEN MISSISSIPPI

BREATHING AIR MODIFICATIONS
P&I DIAGRAM FOR F-103 INSTALLATION
FIGURE 5

SCALE: NTS

APPD: V.E. Messick
DATE: 5/21/80

No.

VAB.0001027864

VAB.0001027865

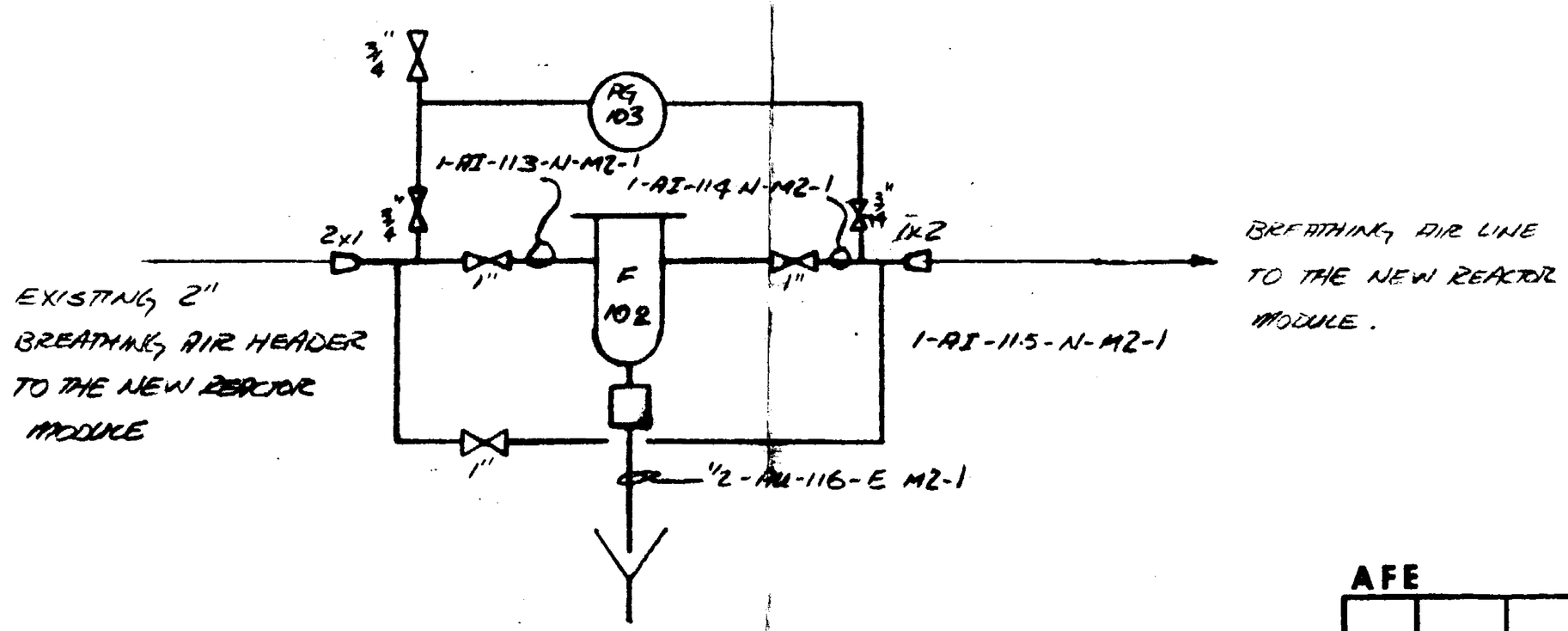

NOTE: 1) F-102 TO BE LOCATED SOUTH OF THE DEL TECH AIR DRYER AND NORTH OF THE NEW REACTOR MODULE. (SEE FIGURE 2)

2) F-102 TO DRAIN TO THE DRAIN NORTH OF THE WESTERN KNOCKOUT TANK WATER COOLER (CONOCO NO. 55-334) (RECIRCULATION COOLER)

AFE

ISU	DATE	DESCRIPTION	BY	CKD	APD
	5/11/80	PROCESS DESIGN	SBV		WEM

CONOCO CHEMICALS

ABERDEEN MISSISSIPPI

BREATHING AIR MODIFICATIONS

P&I DIAGRAM FOR F-102 INSTALLATION

FIGURE 4

SCALE: NTS

0-534 25137-6

VAB.0001027866

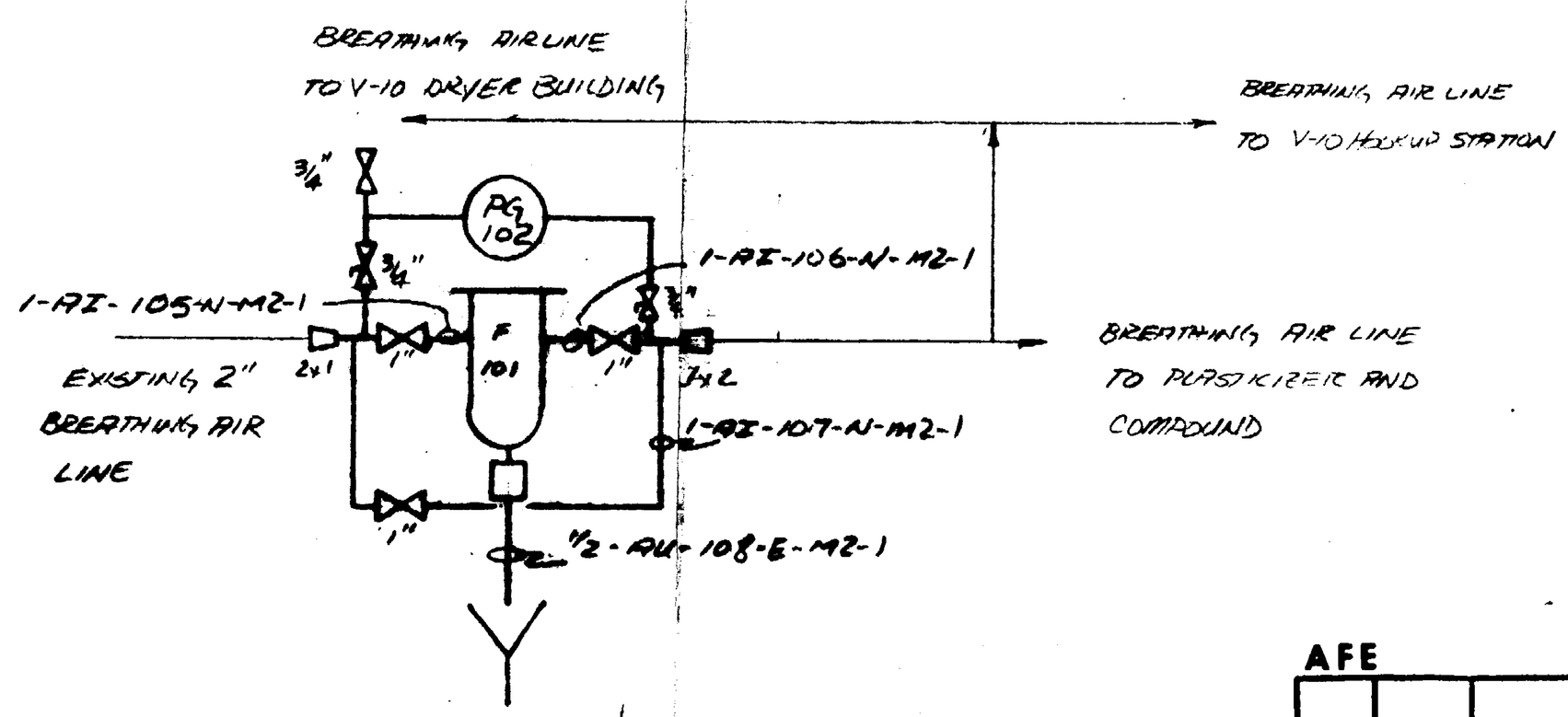

NOTE: 1) F-101 TO BE LOCATED ON THE BREATHING AIR HEADER EAST OF THE V-10 DRYER BUILDING. (SEE FIGURE 2)

2) F-101 TO BE HANKINSON MODEL 3404-2 WITH INTERNAL DRAIN TRAP

3) F-101 TO DRAIN TO THE CONCRETE UNLOADING AREA EAST OF THE V-10 DRYER BUILDING

AFE

ISU	DATE	DESCRIPTION	BY	CKD	A
	5/11/80	PROCESS DESIGN	SBV		V

CONOCO CHEMICALS

ABERDEEN MISSISSIPPI

BREATHING AIR MODIFICATIONS
P&I FOR F-101 INSTALLATION
FIGURE 3

SCALE: NTS

APPD: D. E. Messick
DATE: 5/21/80

No.

BRUNING 40-534 25137-6

VAB.0001027867

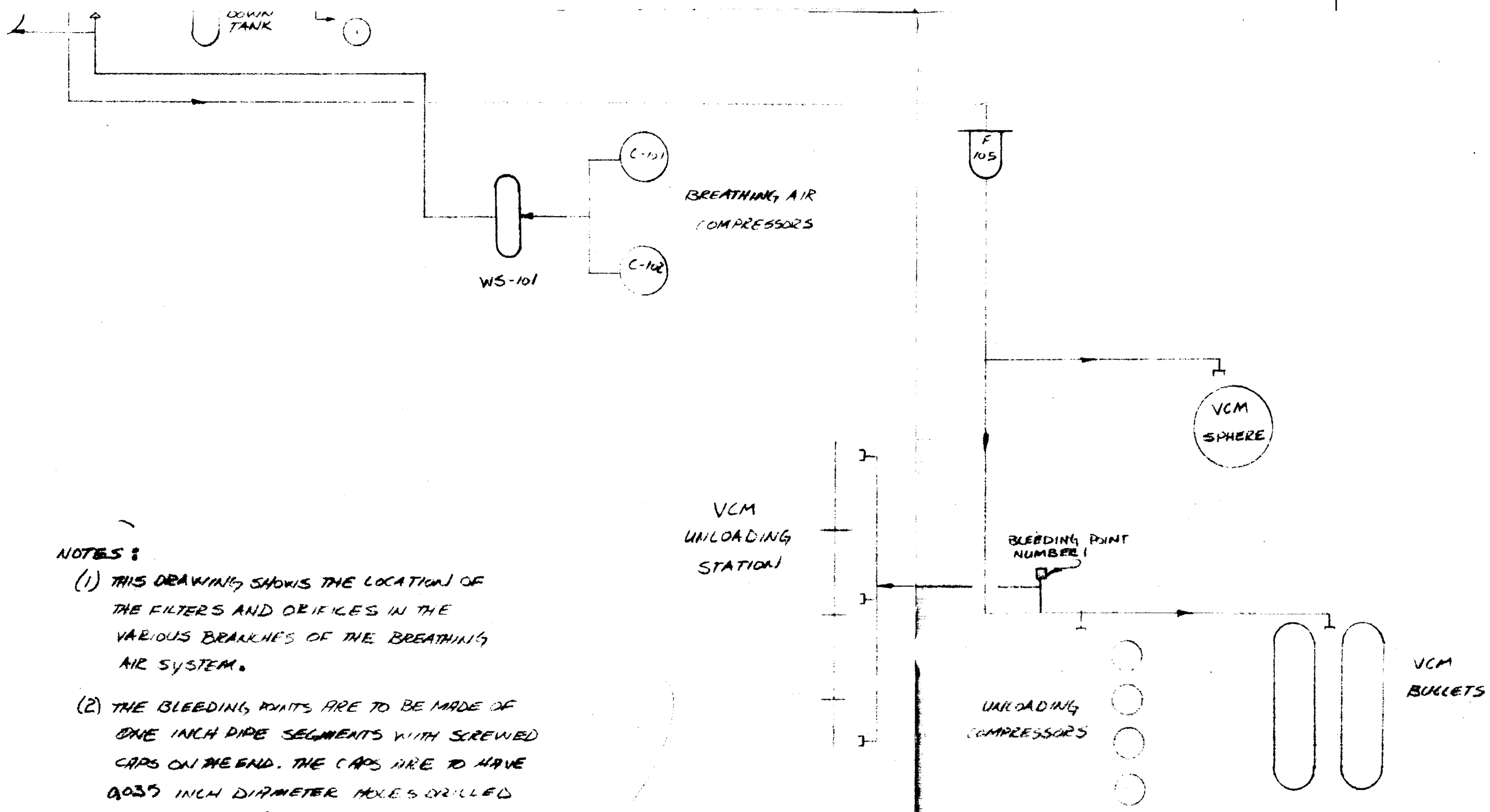

NOTES:

(1) THIS DRAWING SHOWS THE LOCATION OF THE FILTERS AND ORIFICES IN THE VARIOUS BRANCHES OF THE BREATHING AIR SYSTEM.

(2) THE BLEEDING POINTS ARE TO BE MADE OF ONE INCH PIPE SEGMENTS WITH SCREWED CAPS ON THE END. THE CAPS ARE TO HAVE 0.035 INCH DIAMETER HOLES DRILLED IN THEM TO ALLOW BLEEDING OF THE AIR.

(3) ALL BLEEDING POINTS ARE LOCATED AT THE END OF A PIPE RUN EXCEPT BLEEDING POINT NUMBER 3 AND BLEEDING POINT NUMBE 4. SEE DETAIL ABOVE FOR BLEEDING POINTS 3 AND 4.

(4) THE BLEEDING POINTS ARE SIZED TO BLEED AT A RATE OF 5 SCFM.

LEGEND

F : COALESCING FILTER

ISU	DATE	DESCRIPTION	BY	CKD	APP
	7/10/80	PROGRESS DESIGN	SCY		

CONOCO CHEMICALS

ABERDEEN MISSISSIPPI

BREATHING AIR MODIFICATIONS
ORIFICE AND FILTER LOCATIONS
FIGURE 2

SCALE: NTS

APPD: V.E. Meisel
DATE: 8/7/80

No.

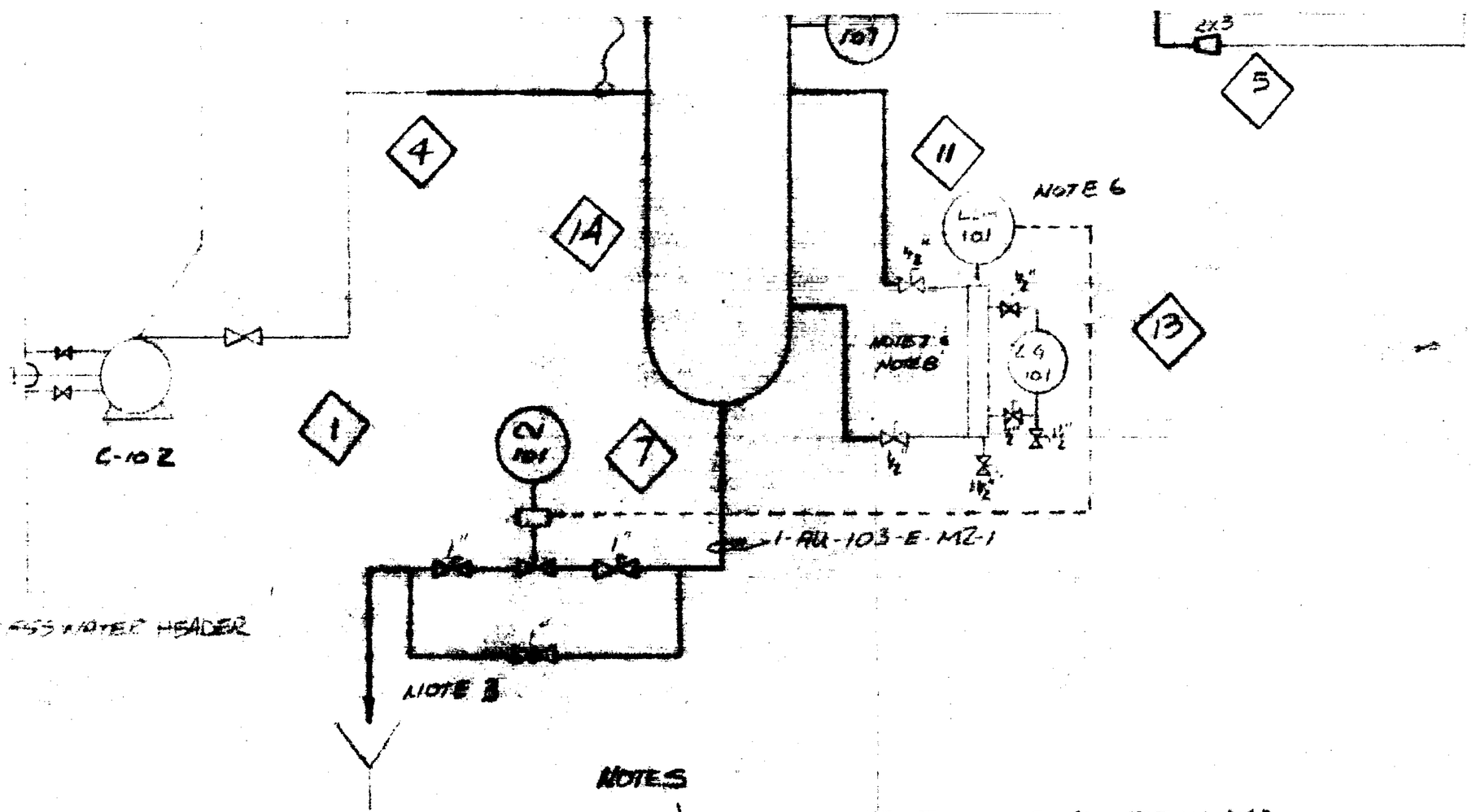

NEW
EXISTING
WORK LIST ITEM

NOTES

1) AIR LEVEL CONTROL LEG TO BE RELOCATED FROM THE EXISTING BARRETTING AIR SYSTEM. THE LEVEL CONTROL LEG IS TO BE INSULATED AND ELECTRIC TRACED.
2) WATER LEVEL TO BE MAINTAINED AT BOTTOM TANGENT ON WS-101.
3) THE BOTTOM HALF OF WS-101 IS TO BE INSULATED AND ELECTRIC TRACED.

1) WS-101 TO HAVE INTERNAL MESH PAD
2) PSE-101 TO BE RELOCATED TO WS-101 FROM EXISTING AIR-WATER SEPARATOR
3) 1-AU-103 TO BE TIED TO DRAIN NORTH OF THE COMPRESSOR STATION
4) ALARM HORN AT COMPRESSOR STATION TO BE INTERCONNECTED TO SOUND IN THE EVENT OF COMPRESSOR FAILURE
5) TP-101 TO DRAIN TO DRAIN AT THE EMISSION RECOVERY SYSTEM
6) LSH-101 IS AN EXISTING LEVEL SWITCH TO BE RELOCATED FROM THE EXISTING AIR-WATER SEPARATOR.

NO.	DATE	DESCRIPTION	BY	CKD	APD
	CHK	PROCESS DESIGN	SEU		

CONOCO CHEMICALS
PASCAGOULA MISSISSIPPI

BARRETTING AIR MODIFICATIONS
P&I DIAGRAM
FIGURE 1

SCALE: NTS

DWN: V.G. Thomas
DATE: 5/21/90

No.

VAB.0001027868