Rec'd

FINAL REPORT

INVESTIGATION OF ORGANIC POLLUTANTS IN WATER AND WASTEWATER DISCHARGES FROM TEXTILE INDUSTRIES.

to

Georgia Department of Natural Resources
Environmental Protection Division

Georgia State University, Biology Department
Project Number 406

Peter E. Gaffney, Ph.D.
Project Director

Submitted: 31 March 1975

MONS 051201

Table of Contents

Introduction: Project Information - Page 1.
Rationale, Historical Considerations - Page 2.
Specific Objectives - Page 3.

Materials and Methods: Sampling Periods - Page 4.
Sampling, Composites - Page 4.
Analyses - Page 5.
Gas Chromatography - Page 5.

Results: Flow Data - Streams - Page 6, 7.
Water Treatment Plants - Page 8.
Waste Treatment Plants - Pages 9, 10.

Waste Treatment Plants: Operation, Performance - Pages 11, 12.
Biomass Evaluation - Page 13.

GC: Retention Times, Standards - Pages 14, 15, 16, 17, 18.
Water Samples - Page 19.
Wastewater Samples - Pages 20, 21, 22, 23, 24.
Polychlorinated Biphenyls, Rome - Pages 25, 26.
Pesticides - Pages 27, 28.
Textile Chemical Usage - Page 27.

Biological Effects: Inhibition and Degradation - Pages 29-41.
Fish Toxicity - Pages 42, 43.

Summary and Conclusions - Pages 42, 44.

Bibliography - Page 45.

Appendix: Gas Chromatograms, Aroclor
Standards and Rome Samples

MONS 051202

INTRODUCTION

Project Information: This investigation was a continuation of an earlier agreement between the Environmental Protection Division and Georgia State University (Project Number 367) which covered work performed between 1 January 1974 and 30 June 1974. The work reported herein covers the period 1 July 1974 and 31 March 1974, the renewal agreement having been modified to provide for a two month extension of time for completion.

In many cases, the results of Project No. 367 are incorporated into this report, mainly to compare the data obtained during high and low stream flow.

The cities of Dalton, Rome and Calhoun Georgia are located in the northwest part of the state on tributaries of the Coosa River which forms part of the Mobile River basin.

These three cities accomodate a large proportion of the Carpet and Rug manufacturing industry which is concentrated in this area. The (International) Carpet and Rug Institute is located in Dalton. In 1972, 57 percent of all Tufted Carpet and Rug establishments in the United States were located in Georgia. Of the total production employees in this industry, Georgia accounted for 60 percent. In 1973, the Georgia Carpet and Rug industry used almost one billion pounds of synthetic fiber (face-yarn) to produce approximately 600,000,000 square yards of carpet and rugs. Arnold (1) has shown that 90 percent of the Georgia industry is located on the Coosa River basin.

Manufacturers of synthetic fiber carpeting have a very high demand for chemicals. For instance, dye-carriers must be used and biphenyl is considered to be the most efficient and least expensive for this purpose. It has

MONS 051203

been estimated (2) that the amount of this carrier used on the Coosa River basin would be at least 23 million pounds per annum. Many other chemicals are used in this form of textile-processing, notably di- and trichlorobenzenes, ethyl hexanol, methyl naphthalene, methyl benzthiazole, and the nonionic surfactant Igepal CO-710 which is used as a dispersing and emulsifying agent for the dye carriers. It is expected that these and other compounds would be present in the mill waste discharges. Igepal may contain as much as 400 ppm of nonylphenol. Anaerobic degradation of the surfactant may result in the release of the two precursers (3). The presence of nonylphenol has been detected by EPA at the Rome and Calhoun waste treatment facilities and down river (4).

Very little information was available at the outset concerning the transfer and dispersal of these textile-processing chemicals into the environment, and in particular, their treatability or biodegradability and possible toxicity to microorganisms, aquatic fauna and flora and to man.

Biphenyl has been detected in the streamwaters by Tincher (5) and in trickling filter biomass from Rome by the Georgia Environmental Protection Division (EPD) at a level of 1100 mg. per dry Kilogram (6).

All waste treatment plants have been experiencing operating difficulties, especially in Rome and Calhoun. In 1973, Gaffney (7) reported the presence of 18 ppm of polychlorinated biphenyls (PCB's) as Aroclor 1254 in the Rome trickling filter slime. The Rome facility was pre-chlorinating for odor control and also chlorinating the secondary effluent for disinfection, but the plant at that time was accomplishing very little B.O.D. removal. This raised the question as the the advisability of chlorination practice in the

MONS 051204

potential presence of biphenyl.

The Georgia EPD is responsible for water supply protection in this area and needed to know what is in the wastes, if any potentially toxic chemicals were getting into public water supplies, and if these chemicals were responsible for interference with effective waste treatment practice in the municipalities.

For the purposes of evaluating the safety of public water supplies, it was necessary to sample during periods of low and high precipitation (and thus stream flow).

The specific objectives of this project were as follows:

a. To obtain data during a low and high stream flow period on concentrations of biphenyl, polychlorinated biphenyls (PCB), nonylphenol, trichlorobenzene, 1-methylnaphthalene, 2-ethyl-1-hexanol, and 2-(methylthio) benzythiazole in water supplies and wastewaters in the cities of Dalton, Calhoun, and Rome, Georgia.

b. To determine the effects of final chlorination (for disinfection) on analyses for Biochemical Oxygen Demand (B.O.D.) in secondary treatment plant effluents at the above locations.

c. To determine if PCB's are present in the isolated discharges of specific industries involved with the manufacture and handling of transformers in the area of investigation.

d. To determine the biodegradability of the aforementioned substances and oxidation kinetics of mixed liquors in aeration units at the Dalton and Calhoun waste treatment plants.

e. To determine the LD_{50} range of biphenyl and PCB in Fish Bioassay.

f. To continue the effort to obtain chemical use data in carpet and rug manufacture.

MONS 051205

MATERIALS AND METHODS

Sampling Period: The month of October, 1974 was expected to be a period of of very little rainfall and thus one in which the stream-waters of Northwest Georgia would contain the highest concentrations of any textile-processing chemicals which may occur. This expectation proved correct and it was observed that little precipitation occurred immediately before, during, or after the sampling period of October 4 through October 26.

Sampling Method: All work at the water and wastewater treatment plants in the three cities was coordinated with the plant operating staff. The sampling containers were glass, screw-capped with teflon liners which had been thoroughly cleaned and rinsed with hexane and acetone (chromatographic-grade) prior to drying. The samples were obtained every two or three hours for 24-hour periods, refrigerated and flow-rated composites were performed on three different days in each of the three cities. The samples at the water treatment plants consisted of Raw water, Finished water, and Backwash water, the latter being a grab sample. Samples taken at the Wastewater Treatment Facilities (WTF) varied according to the specific processes utilized at the several locations. At the WTF sites samples of sludges were also acquired in addition to activated sludge or trickling filter biomass which was evaluated microscopically.

MONS 051206

Analyses: All water and wastewater samples were analyzed for organic components using gas chromatography. For this purpose, one-gallon composites were extracted with hexane and extracts were stored at 3-5°C. Final extract volumes ranged from 30-40 ml. with no further concentration. Some samples, due to emulsification, had to be filtered through glass wool and sodium sulfate. GC peaks were compared to known standards. Analysis of the WTF samples for Biochemical Oxygen Demand (B.O.D.), Chemical Oxygen Demand (C.O.D.), Suspended Solids (S.S.), and organic components were performed according to the procedures outlined in the 13th edition of Standard Methods for the Examination of Water and Wastewater.

Gas Chromatography: Two (2) Hewlett-Packard Units were used in this study and are described as follows:

1. Electron Capture Detector
   Unit - Hewlett Packard Model 5710 A
   Column - 3ft. F.T. - 10% OV-1, 80-100-GHP; 6 ft. - gaschrom X with 1.5% OV-17 plus 1.95% QF-1
   Oven Temperature - 215°C
   Detector Temperature - 300°C
   Carrier Gas - 10% Argon/Methane (later changed to 5% Argon/Methane)
   - rate = 60 ml./min.
   - pressure = 48 psi.
   Chart speed = 1.0 cm./min.
   Attenuator setting = 16 or 32
   Injection volume - 1.0-3.0 microliters

2. Flame Ionization Detector
   Unit - Hewlett Packard Model 5720 A
   Column - 6 ft., 3% Sil. Rub., OV-101, 80-100-AWP, 5721
   Oven Temperature - 160°C Isothermal
   Detector Temperature - 300°C
   Heated Injection Port Temperature - 250°C
   Gases: Nitrogen (carrier) - 50 psi, 20 ml./min.
   Hydrogen - 28 psi, 30 ml./min.
   Air - 21 psi, 240 ml./min.
   Range = 10 x Attenuator = 16
   Injection volume = 1.0 microliters

MONS 051207

RESULTS

Flow Characteristics

In Table I, stream flow data are presented which cover the two sampling periods: February - March, 1974 and October, 1974. It may be seen that stream flows in the area ranged from four (4) to twenty (20) times higher during the Fall (October) sampling period as those observed in the previous winter season.

Flow data for the two sampling periods at the water and wastewater treatment facilities (WTF) are presented Tables II and III. The composite sampling was scheduled to attempt to evaluate mid-week, clean-up, and week-end (domestic) conditions at each location. There were significant differences between the mid-week and week-end values - but no particular data indicated a specific Friday to Saturday clean-up regime in these cities.

Basic data on B.O.D., C.O.D., and S.S. content is presented in Table IV and performance values resulting from this in Table V. The flow schematic for the Dalton Abutment Road (old) plant is given in Fig. 1. All of the combined T.F. and A.S. effluent from this plant is incorporated into the influent to the Riverbend (new) plant. It may be seen that activated sludge BOD/COD removal is high compared to the trickling filter. The low efficiency is overcome by good performance at the Riverbend plant. Suspended Solids removals at all plants was very low. There were significant variations in comparison of the two seasonal sampling periods.

The results of microscopic evaluation of all biomass samples are presented in Table VI. Only the Dalton samples appeared normal or close to it.

MONS 051208

TABLE I

Northwest Georgia Stream Flow

Conasauga River at Tifton, Ga. - 02387000

Date	Mean Daily Discharge CFS	Date	Mean Daily Discharge CFS (Provisional)
Feb. 21, 1974	2,190	Oct. 16, 1974	185
22	3,330	17	213
23	5,030	18	308
24	4,870	19	211
25	2,470	20	131
26	1,900	21	91
27	1,630	22	94
28	1,480	23	84
		24	82
		25	78
		26	73

Oostanaula River near Rome, Ga. - 02388500

Mar. 16, 1974	2,630	Oct. 8, 1974	675
17	2,590	9	677
18	2,640	10	670
19	2,620	11	671
20	2,730	12	671
21	3,320	13	651
22	4,140	14	649

Oostanaula River at Resaca, Ga. - 02387500

Mar. 20, 1974	2,510	Oct. 4, 1974	517
21	3,250	5	511
22	4,390	6	509
23	4,280	7	515
24	3,180	8	520
25	2,640	9	514
		10	509

MONS 051209

TABLE II

Water Treatment Plant Flow Data

City	Date	Average Flow mgd
Dalton	2/22-23/74	20.0
	2/23-24/74	13.0
	2/27-28/74	28.0
	10/16-17/74	25.0
	10/19-20/74	-
	10/25-26/74	-
Calhoun	3/21-22/74	-
	3/22-23/74	-
	3/24-25/74	-
	10/ 4- 5/74	8.5
	10/ 6- 7/74	8.5
	10/ 9-10/74	8.5
Rome	3/17-18/74	9.0
	3/21-22/74	12.0
	3/22-23/74	11.0
	10/ 9-10/74	12.0
	10/11-12/74	11.7
	10/12-13/74	8.9

MONS 051210

TABLE III

Wastewater Treatment Plant Flow Data

City	Date	Average Flow mgd
Dalton-Abutment Rd.	2/22-23/74	14.2
	2/23-24/74	6.1
	2/27-28/74	18.3
	10/16-17/74	19.0
	10/19-20/74	3.8
	10/25-26/74	12.0
Dalton-Riverbend Rd.	2/22-23/74	15.5
	2/23-24/74	7.7
	2/27-28/74	22.8
	10/16-17/74	26.6
	10/19-20/74	6.6
	10/25-26/74	11.7
Calhoun	3/21-22/74	5.7
	3/22-23/74	4.0
	3/24-25/74	1.5
	10/ 4- 5/74	3.6
	10/ 6- 7/74	0.8
	10/ 9-10/74	3.7
Rome	3/17-18/74	2.8
	3/21-22/74	3.9
	3/22-23/74	3.1
	10/ 9-10/74	7.2
	10/11-12/74	5.9
	10/12-13/74	3.6

MONS 051211

TABLE IV

Waste Treatment Plant Operating Data*

Facility	Sample	Winter, 1974 Average B.O.D. mg./L.	Winter, 1974 Average C.O.D. mg./L.	Winter, 1974 Average S.S. mg.L.	Fall, 1974 Average B.O.D. mg./L.	Fall, 1974 Average C.O.D. mg./L.	Fall, 1974 Average S.S. mg./L.
Dalton - Abut. Rd.	Influent	183	635	13	235	548	73
	Primary Effluent	228	613	44	185	548	64
	T.F. Effluent	103	400	25	162	478	64
	A.S. Effluent	-	-	-	38	258	29
	Final Effluent	85	412	16	97	390	78
Dalton - Riverbend	Influent	148	425	43	203	528	136
	Clarifier Effluent	-	-	-	3	110	-
	Final Effluent	18	270	10	4	100	26
Calhoun	Influent	85	348	57	150	555	61
	Clarifier Effluent	-	-	-	93	553	74
	Final Effluent	19	244	59	63	505	63
Rome	Influent	70	202	119	153	280	87
	Primary Effluent	68	157	39	148	282	59
	Final Effluent	30	78	17	93	177	43

*All values are averages of three composite samples.

MONS 051212

TABLE V

Waste Treatment Plant Operation: Removal of B.O.D., C.O.D., and S.S.

Facility	Unit	B.O.D. Wint. %	B.O.D. Fall %	C.O.D. Wint. %	C.O.D. Fall %	S.S. Wint. %	S.S. Fall %
Dalton - Abut. Rd.	Primary	0	21	3	0	0	12
	T.F.	44	31	37	13	0	12
	A.S.	-	84	-	53	0	60
	Plant	54	59	35	29	0	0
Dalton - Riverbend	Clarifier	-	99	-	79	-	-
	Plant	88	98	36	81	77	81
Calhoun	Clarifier	-	38	-	0	-	0
	Plant	78	58	30	9	0	0
Rome	Primary	3	3	22	0	67	32
	Plant	57	39	61	37	86	51

MONS 051213

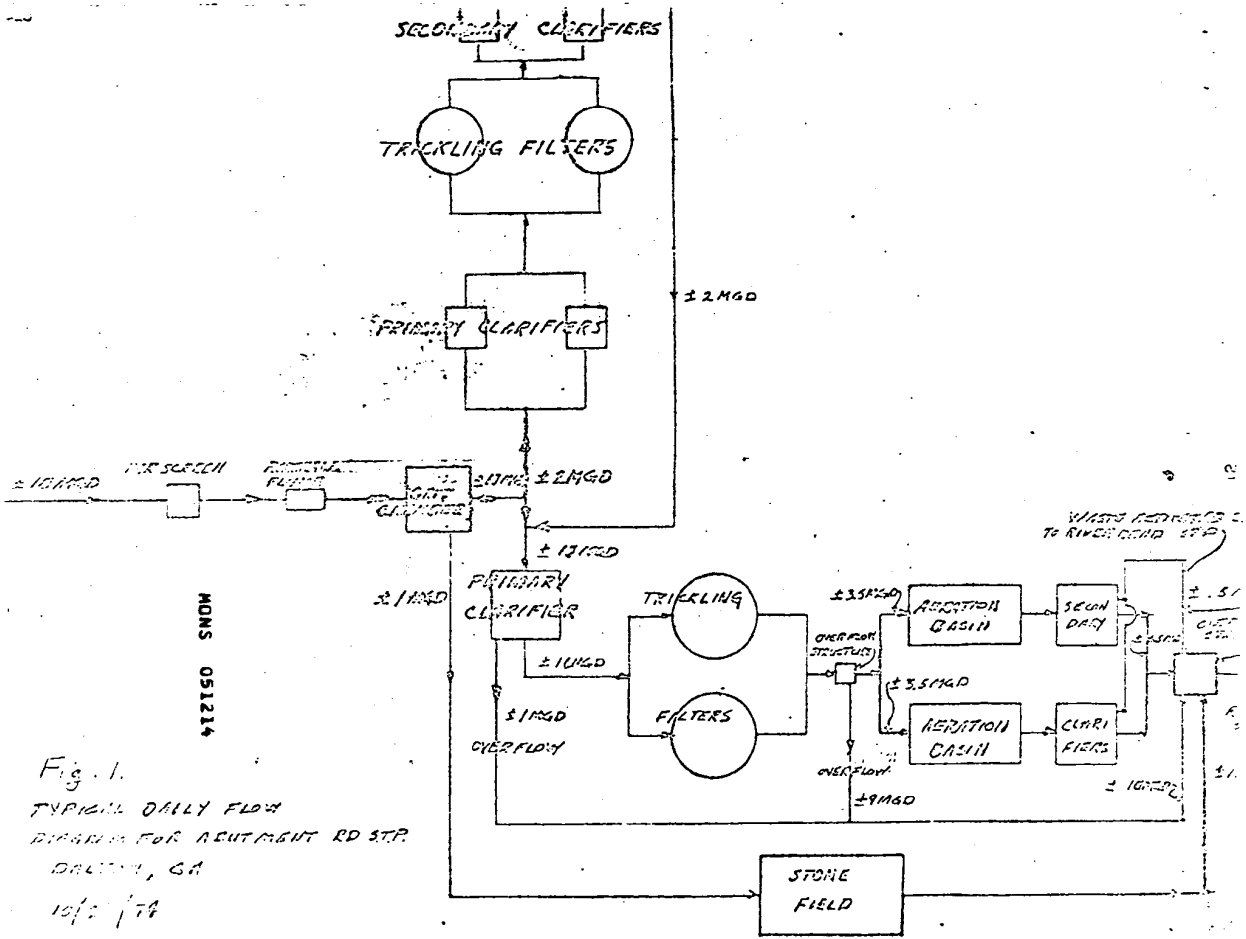

MONS 051214

Fig. 1.
TYPICAL DAILY FLOW
DIAGRAM FOR ACUTMENT RD STP
DALTON, GA
10/5/78

TABLE VI

Biomass Evaluations

...ility	Period	Observations
...ton - Abut. Rd. T. F. Slime	Winter, 1974	Thin slime; red color; high filamentous bacteria; no attached ciliates or rotifers.
	Fall, 1974	Thin slime; normal bacterial and protozoa; low numbers of attached ciliates and rotifers.
Mixed Liquor	Winter, 1974	Dense, brown, slight bulking; high filamentous bacteria; no attached ciliates or rotifers.
	Fall, 1974	Thick sludge but with slight bulking; normal bacterial but low zootic level.
Dalton - Riverbend Mixed Liquor	Winter, 1974	Dense, brown, good settling; normal microbial population.
	Fall, 1974	Thick (7480 mg./L. MLSS), brown, dense, good-settling floc; no filaments or amoeboid protozoa; low protozoa and rotifer level.
Calhoun Mixed Liquor	Winter, 1974	Very low MLSS; poor settling; dispersed microbiota; no attached ciliates or rotifers.
	Fall, 1974	Very turbid but no dense floc; high bacterial level; a few protozoa - none attached; no rotifers; only two rotating aerators in operation.
T. F. Slime	Winter, 1974	Very thin slime with black deposit; no attached ciliates or rotifers.
	Fall, 1974	Fibrous, considerable black deposit; [illegible] no attached ciliates or rotifers; high [illegible]. Intermittant operation due to construction.

MONS 051215

Gas Chromatography - Organic Components

In Tables VII through X are presented basic information on retention times and other data on standards for the Flame Ionization (FID) unit and the Electron Capture units using the OV-1 and the OV-17 plus QF-1 columns, respectively.

Sample peaks were compared to these known standards for identification and quantitation was based on peak heights since almost all peaks were very narrow. For the Aroclors, only the three or four major peaks (exceeding 30 percent of full-scale) were used for this purpose.

GC data for the major flow samples obtained during both the fall and winter sampling periods are presented in Tables XI through XIV.

It may be seen (Table XI) that Biphenyl (Bp), ethyl hexanol (EH), methyl benzthiazole (MBT), and nonylphenol (NP) were absent in all raw, finished, and backwash samples from each of the three cities. Di- or trichlorobenzenes were detected in several of these. Seven samples indicated the presence (presumptive, since all standards were not available) of individual PCB isomers but no Aroclors.

Component quality and quantity varied considerably in WTF samples. Final effluents were generally very low or lacking in FID components, the exception being the Calhoun facility, and to a lesser extent, Rome.

Only nine WTF samples contained a significant (greater than 1 p.p.b.) MBT and none had NP although traces below this level are indicated (+).

Definite Aroclors were present only in the Rome samples, in one case as much as 12 p.p.b. in final effluent. The reason for this is discussed in the next section of the report.

Significant amounts of biphenyl and dichlorobenzene were observed in several sludge samples.

MONS 051216

TABLE VII

Retention Times of FID Components on OV-101

Component	Nanograms Injected	Retention Time minutes	Scale Height percent
Ethyl Hexanol	10	0.5	20
1, 3, 5 Trichlorobenzene	100	1.0	11
1, 2, 4 Trichlorobenzene	10	1.2	14
Methyl Naphthalene	10	2.2	14
Biphenyl	100	2.7	10
Methyl Benzthiazole	100	6.6	1
Nonyl Phenol	100	10.8-11.7	4

MONS 051217

TABLE VIII

Relative Retention Time of Pesticide Standards on OV-1

Retention Time minutes	Relative Retention Time	Pesticide or Other Standard(s)
0.1-0.2	0.01-0.03	Paradichlorobenzene
0.2-0.3	0.03-0.04	1, 2, 4 - or, 1, 3, 5 Trichlorobenzene
1.3-1.4	0.16-0.18	BHC Mix or p, p-DDT
1.9	0.24	Chlordane mix
2.2	0.28	Chlordane mix
2.4	0.30	Heptachlor
2.6	0.33	Chlordane mix
2.8	0.35	Aldrin
3.4	0.43	Heptachlor Epoxide
3.8	0.48	2-4-D (PGBEE)
3.9	0.49	Gamma Chlordane and Toxaphene
4.0-4.1	0.50-0.51	o, p-DDE
4.4	0.55	Alpha Chlordane and o, p-DDE
4.9	0.61	Dieldrin and p, p-DDE
5.2	0.65	Toxaphene
5.6	0.70	Endrin
6.5	0.81	o,p-DDT and DDT mix
6.7	0.84	Toxaphene
7.7	0.96	Toxaphene
8.0	1.00	p, p-DDT and DDT mix
8.9	1.11	Toxaphene
10.3	1.29	Toxaphene

MONS 051218

TABLE IX

Relative Retention Times of Arochlor Standards on OV-1

Arochlor Number	Retention Time minutes	Relative Retention Time
1221	0.7, 1.3	0.09, 0.16
1232	1.3, 2.1	0.16, 0.26
1242	1.2, 1.5, 1.6, 2.0 2.5, 2.7, 3.5, 3.7	0.15, 0.19, 0.20, 0.25, 0.31, 0.34, 0.44, 0.46
1248	2.1, 2.6, 3.0, 3.8	0.26, 0.33, 0.38, 0.48
1254	2.4, 2.8, 3.6, 4.2 5.1, 6.2, 7.2, 8.4	0.30, 0.35, 0.45, 0.53, 0.64, 0.77, 0.90, 1.04
1260	5.0, 6.2, 7.5, 8.9 10.4, 12.7, 15.2, 17.0	0.63, 0.78, 0.94, 1.11, 1.30, 1.59, 1.90, 2.13
1262	6.6, 7.9, 8.6, 9.2, 10.5, 12.0, 14.4, 17.0, 18.8	0.83, 0.99, 1.08, 1.15, 1.31, 1.50, 1.80, 2.13, 2.35

MONS 051219

TABLE X

Retention Time of Chemical Standards* on OV-17 plus QF-1

Standard	Retention Time	Nanograms/Full Scale
p-Dichlorobenzene	3	
1,2,4-Trichlorobenzene	4	0.03
1,3,5-Trichlorobenzene	3	0.30
p-Chlorobiphenyl	17	10.50
4,4' Dichlorobiphenyl	36	2.50
Heptachlor	46	0.15
Aldrin	58	0.25
Heptachlor Epoxide	89	0.30
o,p-DDE	98	0.40
-Chlordane	103	0.30
p,p-DDE	116	0.60
Dieldrin	138	0.80
o,p-DDT	164	1.00
Endrin	166	1.10
p,p-DDT	221	2.50
Aroclor**		
1221	13, 22, 25	.00
1232	26, 45	5.00
1242	34, 45	3.00
1248	34, 46, 57, 69, 87	4.20
1254	56, 87, 97, 132, 151	6.00
1262	131, 146, 166, 186	
	210, 223, 272, 285	
	324, 417	

*Based on 1 ng./ul injected with attenuation set at 16.

**Retention times shown for aroclors were 30 percent of scale height or greater.

MONS 051220

Chemical Components in Water Treatment Plant Samples: Winter and Fall, 1974.

Sample	Composite[a] Date	Dichlorobenzene Col. I[b]	Dichlorobenzene Col. II[c]	Trichlorobenzene[d] Col. I	Trichlorobenzene[d] Col. II	Other EC Components[e] Col. I	Other EC Components[e] Col. II
		micrograms per liter (ppb)					
alton	2/23/74	0	0.2	0	0.1	32/53	97/23
aw	2/24/74	0	0	0	0	32/51,209/7	97/29
	2/28/74	0	0	0	0.1	71/9	249/6
	10/17/74	0	5.6	0	<0.1	11/12	174/5
	10/20/74	0	5.2	0	<0.1	0	0
	10/26/74	0	15.0	0	<0.1	0	256/10, 2
alton	2/23/74	0	0	0	0	34/16	0
inished	2/24/74	1.5	0.2	0	0.1	9/32	0
	2/28/74	3.0	2.5	0.2	0	69/18	48/5
	10/17/74	0	0	0	0.2	0	0
	10/20/74	0	0	0	0.2	0	258/5, 28
	10/26/74	0	0	0	0	0	282/7
alton	2/23/74	0	7.4	0.1	1.4	9/14,33/6	98/9
ackwash	10/17/74	5.4	4.9	0	1.4	12/100+,	0
	10/20/74	0	0	0.1	0.3	41/6	9/5
	10/26/74	9.4	5.1	0.1	1.3	36/6	0
alhoun	3/22/74	17.0	0	0	0.2	9/21	5/12, 21/
aw	3/23/74	0	0	0	0.2	0	0
	3/25/74	0.1	1.2	0	0.4	18/10	48/26
	10/ 5/74	0	0	0	<0.1	0	0
	10/ 7/74	0	0	0	<0.1	0	0
alhoun	3/22/74	0	0	0	<0.1	0	0
inished	3/23/74	0	0	0	<0.1	0	0
	3/25/74	0	0.2	0	0	61/10	250/6
	10/ 5/74	0	0	4.0	1.0	8/18,17/10	5/143, 21 49/14
	10/ 7/74	8.0	2.3	0	0.4	0	0
	10/10/74	0	0	0.8	0.1	0	0
alhoun	3/22/74	3.7	0	0.1	0.2	10/12,73/11	48/11, 2
ackwash	10/ 5/74	0	2.2	0	0.4	0	0
	10/ 7/74	0	u	0.2	u	0	u

MONS 051221

TABLE XI

Chemical Components in Water Treatment Plant Samples: Winter and Fall, 1974. (continued

Sample	Composite[a] Date	Dichlordoenzene Col. I[b]	Dichlordoenzene Col. II[c]	Trichlorobenzene[d] Col. I	Trichlorobenzene[d] Col. II	Other EC Components Col. I	Other EC Components Col. II
		micrograms per liter (ppb)					
Rome Raw	3/18/74	53.0	9.6	0.1	0.2	9/99,25/12, 159/6	20.59,
	3/22/74	0	0	0.1	0.1	0	0
	3/23/74	0	0	0	0.1	0	47/9, 24
	10/10/74	0	0	0.8	0.2	0	0
	10/12/74	4.2	u	0	u	0	u
	10/13/74	0	0	3.0	0.3	9/5	5/9, 20/7
Rome Finished	3/18/74	0	0	0	0	73/5	0
	3/22/74	0	0.3	0	0.1	0	80/47
	3/23/74	0	0	0	0.1	83/47	0
	10/10/74	0	0	0	0.1	0	0
	10/12/74	1.0	1.2	0.1	0.2	9/5	26/5
	10/13	10.0	0.9	0.1	0.3	9/9	26/6
Rome	3/18/75	0	0	0.2	0.8	5/11,32/20, 101/7	8/8, 9
	3/22/74	1.6	0	0	0.1	0	0
	3/23/74	0	0	0.1	0.4	0	0
	10/12/74	0	0	0	0.6	0	0
	10/13/74	0	0	0.1	0.4	0	0

*Footnotes: (a) Composite taken for 24 hours ending date shown.

(b) Column used was 3 ft., 10% OV-1.

(c) Column used was 6 ft., 1.5% OV-17 plus 1.95% QF-1.

(d) 1,2,4- and 1,3,5-Trichlorobenzene combined.

(e) Includes only those with peak height of 5% scale or greater; 0=none present (1.0 and 0.1 ppb for DCB and TCB, respectively); u=undetermined. Peaks confirmed on both columns which indicate the possible presence of chloro-biphenyls are underlined (x/x) = retention time in 1/10 minutes/ percent scale deflection at an attenuation setting of 16.

MONS 051222

TABLE XII

FID Components in Wastewater Samples[1]

ple	Period	Biphenyl	1, 2, 4-TCB	1, 3, 5 TCB	Ethyl-Hexanol	Methyl Naphthalene	Methyl benzthiazole	Nonyl Phenol	Unidentified
				Dalton Abutment Road Plant					
fluent	W	13, 3, 63	0, 0, +	0, 34, 0	4, 2, 3	+, +, 2	0, 0, 86	0, 0, 0	0, 0, 0
	F	5698, 116, 2090	105, 36, 30	0, 0, 510	128, 23, 35	39, 0, 17	0, 0, 0	0, 0, 0	+, 0, +
mary fluent	W	65, 8, 5	0, +, 0	0, 0, 0	4, 0, 0	+, +, +	0, 0, 0	+, 0, 0	+, 0, 0
	F	u, 80, 800	0, 9, 30	0, +, 0	u, 6, 20	u, 0, 8	u, 0, 0	u, 0, 0	+, 0, +
F. Effl.	W	10, 1, 196	+, 0, +	0, 0, 0	4, 0, 7	+, 0, 1	15, 0, 80	+, 0, +	0, 0, 0
	F	0, 45, 132	0, 23, +	+, 0, 0	0, 7, 0	0, 0, 0	0, 0, 0	0, 0, 0	0, 0, 0
S. Effl.	W	12, 8, 28	+, +, 0	0, 0, 0	2, 0, 0	1, +, 0	32, 6, 0	+, 0, 0	0, +, 0
	F	0, 0, 0	+, +, 0	+, 0, 1	0, 0, 0	0, 0, 0	0, 0, 0	0, 0, 0	0, 0, 0
l	W	undetermined							
luent	F	0, 0, 0	0, 0, 0	0, 0, 0	0, 0, 0	0, 0, 0	0, 0, 0	0, 0, 0	0, 0, 0
F. Slime	W	0, 0, 0	0, 0, 0	0, 0, 0	0, 0, 0	0, 0, 0	0, 0, 0	0, 0, 0	0, 0, 0
	F	undetermined							
. Sludge	W	32, 0, 16	0, 0, 0	0, 0, 0	0, 0, 0	8, 0, 0	0, 0, 0	0, 0, 0	0, 0, 0
	F	undetermined							
cted	W	0, 0, 0	0, 0, 0	0, 0, 0	0, 0, 0	0, 0, 0	0, 0, 0	0, 0, 0	0, 0, 0
ge	F	undetermined							
	W	6, 0, 0	0, 0, 0	0, 0, 0	0, 0, 0	1, 0, 0	0, 0, 0	+, 0, 0	+, 0, 0
or	F	u, u, 0	+, +, +	+, 0, +	u, u, 0	u, u, 0	u, u, 0	u, u, 0	u, u, 0

MONS 051223

Dalton Riverbend Road Plant

..fluent	W	8, 9, 43	0, 0, +	0, 0, 0	0, 0, 2	0, 1, +	0, 20, 0	0, 0, -	0, +, +
	F	2050, 0, 0	1, 0, 1	4, 1, 0	0, 0, 0	0, 0, 0	0, 0, 0	0, 0, 0	0, 0, 0
..arifier	W	----------	----------	----------	undetermined	----------	----------	----------	----------
..fluent	F	0, 0, 0	0, 0, R	0, 1, R	0, 0, 0	0, 0, 0	0, 0, 0	0, 0, 0	0, 0, 0
..nal	W	0, 0, 0	0, 0, 0	0, 0, 0	0, 0, 0	0, 0, 0	0, 0, 0	0, 0, 0	0, 0, 0
..fluent	F	0, 0, 0	0, 2, 0	1, 1, 2	0, 0, 0	0, 0, 0	0, 0, 0	0, 0, 0	0, 0, 0
..xed	W	0, 4, 0	0, 0, 0	0, 0, 0	0, 0, 0	0, 0, 0	0, 0, 0	0, +, 0	+, +, 0
..quor	F	u	+	0.	u	u	u	u	u

Calhoun Waste Treatment Plant

..fluent	W	3, 40, 0	+, +, 0	60, 0, 0	1, 5, 0	0, 0, 0	0, 17, 0	0, +, 0	0, +, 0
	F	84, 116, 140	9, 15, 21	0, 1, 2	28, 18, 18	0, 0, 0	0, 0, 0	0, 0, 0	0, 0, 0
..arifier	W	u, 0, u	0, 0, 0	0, 0, 0	0, 0, 0	0, 0, 0	0, 0, 0	0, 0, 0	0, 0, 0
..fluent	F	0, 0, 0	+, +, 0	0, 0, 0	0, 0, 0	0, 0, 0	0, 0, 0	0, 0, 0	0, 0, 0
..nal	W	0, 5, 0	0, 0, 0	0, 0, 0	0, 0, 0	0, 0, 0	0, 11, 0	0, 0, 0	0, 0, 0
..fluent	F	0, 0, 25	0, +, 14	0, 0, R	0, 0, 45	0, 0, 0	0, 0, 0	0, 0, 0	0, 0, 0
..xed	W	19, 0, 0	0, 0, 0	0, 0, 0	0, 0, 0	0, 0, 0	204, 0, 0	0, 0, 0	0, 0, 0
..quor	F	u	2	24	u	u	u	u	u

Rome Waste Treatment Plant

..fluent[2]	W	0, 1, 1	0, 0, 0	0, 0, 25	0, 0, 0	0, 0, 0	0, 0, 0	0, 0, 0	0, 0, +
	F	50, 50, 0, 2567	12, 65, 0, 82	160, 120, 132, 2511	12, 12, 9, 48	0, 0, 0, 6	0, 0, 0, 167	0, 0, 0, 0	+, +, +, 0
..imary	W	0, 1, 0	0, 0, 0	0, 25, 0	0, 0, 0	0, 0, 0	0, 0, 0	0, 0, 0	0, 0, 0
..fluent	F	160, 320, 0	R, 71, 0	773, 192, +	0, 32, 0	12, 0, 0	0, 0, 0	0, 0, 0	0, +, 0

MONS 051224

Rome Waste Treatment Plant (continued)

.al	W	0, 2, 0	0, 0, 0	0, 80, 33	0, 0, 0	0, 0, 0	0, 0, 0	0, 0, 0	0, 0, 0
luent	F	0, 0, 0, 80	R, R, R, 0	0, 0, 0, 0	0, 0, 0, 0	0, 0, 0, 0	0, 0, 0, 0	0, 0, 0, 0	0, 0, 0, 0
. Slime	W	0, 0, 0	0, 0, 0	0, 0, 0	0, 0, 0	0, 0, 0	0, 0, 0	0, 0, 0	0, 0, 0
	F	u, u, 0, 0	u, u, +, 1	u, u, 0, 2	u, u, 0, 0	u, u, 0, 0	u, u, 0, 0	u, u, 0, 0	u, u, 0, 0
ary ge	W	320, 360, 160	0, 0, 0	0, 0, 160	12 0, 0	4, 0, 0	0, 0, 0	0, 0, 0	+, 0, 0
	F	u	+	10.	u	u	u	u	u
ated ge	W	u, u, 680	u, u, 0	u, u, 0	u, u, 0	u, u, 0	u, u, 0	u, u, 0	u, u, 0
	F	---------- Not determined ----------							

All values expressed in micrograms per liter.

+ = trace = low peak representing less than 1 p.p.b.

0 = no trace

R = repeat analysis

Fourth sample was a two-hour composite

MONS 051225

TABLE XIII

Electron Capture Components in Wastewater Samples[1]

Sample	Period	Dichloro-benzenes	Aroclors	PCB's	Other[2]
		Dalton Abutment Road Plant			
Influent	W	47, 27, 53	R, R, R	+, +, +	0, +, +
	F	77, 17, 12	0, 0, 0	+, +, +	+, +, +
Primary Effluent	W	u, 53, 53	u, R, R	u, +, +	u, +, +
	F	0, 6, R	0, 0, 0	+, +, R	+, +, +
T. F. Effluent	W	0, 44, 0	R, R, R	+, +, +	+, +, 0
	F	+, +, +	0, 0, 0	0, 0, 0	+, +, +
A. S. Effluent	W	187, 10, u	R, R, u	+, +, u	+, +, u
	F	42, 0, 3	0, 0, 0	+, +, 0	+, +, 0
Final Effluent	W	---------- undetermined ----------			
	F	0, 0, 0	0, 0, 0	0, 0, 0	+, +, +
T. F. Slime	W	23, u, u	0, u, u	0, u, u	+, u, u
	F	---------- undetermined ----------			
Primary Sludge	W	u, u, 305	u, u, R	u, u, +	u, u, +
	F	---------- undetermined ----------			
Dig. Sludge	W	u, u, 4	u, u, R	u, u, +	u, u, +
	F	---------- undetermined ----------			
Mixed Liquor	W	15, R, 6	R, R, R	+, +, +	+, +, +
	F	0, 0, 0	0, 0, 0	0, 0, 0	0, 0, 0
		Dalton Riverbend Road Plant			
Influent	W	15, 60, 19	R, R, R	+, +, +	0, 0, +
	F	505, 52, 0	0, 0, 0	+, +, 0	+, +, 0
Clarifier Effluent	W	---------- undetermined ----------			
	F	2, 73, R	0, 0, 0	+, +, +	0, 0, 0
Final Effluent	W	8, 0, 0	R, R, R	+, +, +	+, +, +
	F	478, 200, 1192	0, 0, 0	0, 0, 0	0, 0, 0
Mixed Liquor	W	0, 0, 0	R, R, R	+, +, +	+, +, +
	F	5, u, u	0, u, u	+, u, u	+, +, +

MONS 051226

Sample	Period	Dichloro-benzenes	Aroclors	PCB's	Other
		Calhoun Waste Treatment Plant			
Influent	W	53, 53, 0	0, 0, 0	+, +, 0	0, 0, +
	F	187, 242, 338	0, 0, 0	0, +, +	+, +, +
Clarifier Effluent	W	u	0, 0, 0	u	u
	F	6, 3, R	0, 0, 0	0, 0, +	+, +, +
Final Effluent	W	53, u, 0	0, 0, 0	+, u, 0	0, u, +
	F	61, 1, R	0, 0, 0	0, 0, R	+, +, +
Mixed Liquor	W	53, 53, 53	0, 0, 0	+, +, +	+, +, +
	F	u, 400, u	u, 0, u	u, 0, u	u, +, u
		Rome Waste Treatment Plant			
Influent*	W	14, 0, 0	R, R, R	+, +, +	0, 0, +
	F	0, R, R, 0	31, 15, 11, 105	+, +, +, +	+, +, +, +
Primary Effluent	W	0, 25, 0	R, R, R	+, +, +	0, +, +
	F	R, 0, 32	R, 6, 4	R, +, +	+, +, +
Final Effluent	W	0, 12, 0	0, R, R	+, +, +	0, +, +
	F	R, R, R, 0	R, 3, 2, 1	R, +, +, +	+, +, +, +
T. F. Slime	W	u, u, 0	u, u, 0	u, u, 0	u, u, 0
	F	u, u, 0, 0	u, u, 4, 29**	u, u, +, +	u, u, +, +
Primary Sludge	W	u, u,	u, u, R	u, u, +	u, u, 0
	F	5	32	+	+
Digested Sludge	W	u, u, 53	u, u, R	u, u, +	u, u, 0
	F	---------- undetermined ----------			

* Fourth sample was a two hour composite

** 40 ug. per gram of dry solids = 87 ug. per liter of rock

(1) All values expressed as micrograms per liter.

(2) + = unidentifed peaks present.

MONS 051227

Polychlorinated Biphenyls in Rome

A significant factor mitigating the initiation of this investigation was the discovery by the undersigned of a considerable amount of PCB's (as Aroclor 1254) in a sample of the trickling filter slime obtained in the Fall of 1973 at the Rome WTF (7).

In addition to another concurrent investigation dealing with the possibility of PCB production at treatment plants through reaction of chlorine with biphenyl, it was necessary to explore the more likely possibility that a direct industrial discharge was responsible for the appearance of Aroclor 1254 at the waste treatment plant.

On 14 January 1975 an automatic sampler was placed on the General Electric waste discharge line at 3:00 P.M. Sampling was continuous for 21 hours on the non-flow rated composite was extracted and analyzed the following day. At the time of collection of this sample, two hour (2-4 P.M.) composite samples of influent, clarifier effluent, filter slime, and final plant effluent were collected at the waste treatment plant. The composites consisted of equal volumes of 8-15 minute grab samples at each unit. The results of electron capture analysis of the extracts from these samples are in Table XIV.

This concentration of PCB in the slime was 40 micrograms per gram of dry solids. Additional data on the composition of these samples is presented in Table XII and Table XIII.

This information demonstrates that PCB's are discharged (probably through transformer handling), that removal in the WTF is excellent (either through adsorption, precipitation, or biodegradation), and that some PCB is contained in the WTF effluent. This concentration of PCB in the trickling filter biomass could be responsible for inhibition of biota at the high

MONS 051228

(than bacteria) trophic levels, thus leading to interference with treatment processes. Typical chroatograms for the Aroclor 1254 standard and Rome WTF influent are presented in Appendix A.

TABLE XIV

Additional Rome Samples

Sample	Aroclor (1254) micrograms/Liter
G.E. Plant Discharge	23
WTF Influent	105
WTF Clarifier Effluent	2 ?
WTF Final Effluent	1 ?
WTF Tr. Filter Slime Suspension	29

see page 19 before should be 12 ppb

Water Treatment Plant Samples

In the water samples analyzed, there was no evidence (Table XI), for the presence of:

(a) any flame ionization component (includes biphenyl (2), methyl benzthiazole (7), ethyl hexanol (0.1), methyl naphthalene (0.1), and nonyl phenol (4).

(b) any Aroclor, pesticide, or pesticide-related compound based on confirmation with two different columns using electron-capture detection.

The presence of dichlorobenzene was confirmed on two columns in the following samples: Dalton Finished Water on 2/24/74 and 2/28/74 (0.2-3.0 ppb), Dalton Backwash on 10/17/74 and 10/26/74 (4.9-9.4 ppb), Calhoun Raw on 3/25/74 (0.1-1.2 ppb), Calhoun Finished on 10/7/74 (2.3-8.0 ppb), Rome Raw Water on

MONS 051229

3/18/74 (9.6-53.0 ppb), and Rome Finished on 10/12/74 and 10/13/74 (0.9-10.0 ppb). Their presence was indicated on one column (but unconfirmed) with twelve (12) other samples.

The presence of trichlorobenzenes (1,2,4- and 1,3,5- TCB) was confirmed on two columns with the following samples: Dalton Backwash on 2/23/74, 10/20/74, and 10/26/74 (0.1-1.4 ppb), Calhoun Finished on 10/5/74 and 10/10/74 (0.1-4.0 ppb), Calhoun Backwash on 3/22/74 (0.1-0.2 ppb), Rome Raw water on 3/18/74, 3/22/74, 10/10/74, and 10/13 (0.1-3.0 ppb), Rome Finished on 10/12/74 10/13/74 (0.1-0.3 ppb), and Rome Backwash on 3/18/74, 3/23/74, and 10/13/74 (0.1-0.8 ppb). There presence was indicated on one column (but unconfirmed) with 27 other samples at concentrations near the detection limit (± 0.1 ppb).

During the period of analysis, only Aroclor (mixed chloro-biphenyls) standards were available for comparative purposes. However, a number of samples yield EC peaks (confirmed on two different columns) which indicate the possible presence of individual chloro-biphenyls based on comparison with individual Aroclor peaks, i.e. retention times of 8-10 vs. 20-22, 18-19 vs. 47-49, and 31-33 vs. 96-98 on Columns I-II, respectively. These samples should be re-examined when additional individual chlor-biphenyl standards are available. All extracts have been preserved and several standards have been obtained for the purpose of initiating this investigation.

The above information is summarized in Table XV.

TABLE XV

Sample	Dichlorobenzene	Trichlorobenzene	Chlorobiphenyls
	micrograms per liter		peak indication-sample date
Dalton Raw	none	none	2/23, 2/24/74
Dalton Finished	0.2 - 3.0	none	none
Dalton Backwash	4.9 - 9.4	0.1 - 0.4	none
Calhoun Raw	0.1 - 1.2	none	3/22, 3/25/74
Calhoun Finished	2.3 - 8.0	0.1 - 4.0	10/5/74
Calhoun Backwash	none	0.1 - 0.2	3/22/74
Rome Raw	9.6 - 53.0	0.1 - 3.0	3/18, 10/13/74
Rome Finished	0.9 - 10.0	0.1 - 0.3	10/12, 10/13/74
Rome Backwash	none	0.1 - 0.8	3/18/74

Chemical Usage Information

An effort was made to accumulate as much information as possible concerning the quality and quantity of various chemicals used in carpet and rug manufacture in the Northwest Georgia area. Literature was examined and site visits were made to a carpet mill (and a discussion with the president of the company) and to the Carpet and Rug Institute in Dalton. The amount of synthetic dye carrier (mainly Biphenyl) used along the Coosa River basin is estimated at 23 million pounds in 1973. With a mill water usage estimate of between 7.9 and 17.5 billion gallons per year, it is possible that biphenyl could be present in effluents at a level exceeding its limit of solubility in water (7.0 mg./L.).

MGMS 051231

Biodegradability and Inhibition Studies

This general area of the investigation covered several aspects as follows:

1) Effects of the PCB's and textile chemicals on respiration of activated sludge organisms on glucose using the Warburg Respirometer.
2) Effects of the chemical components on microbial growth.
3) Effects of the chemical components on the 24 hour biochemical oxygen demand of activated sludge.
4) Ability of the chemicals to support microbial growth when present as the sole carbon and energy source.
5) Effects of Final WTF chlorination on B.O.D. values of secondary clarifier effluents.
6) Biodegradation of mixtures of the chemicals by Activated Sludge Mixed Liquors and sewage as determined by GC peak reduction.
7) Comparison of Dalton and Calhoun Mixed Liquor respiration kinetics with that of Cobb Co. Activated Sludge.

Warburg Respirometry

Several experiments have been performed using the Warburg to determine the effect of a number of chemicals on the respiration of glucose by mixed cultures of microorganisms derived from Activated Sludge Mixed Liquor.

The Activated Sludge was spread onto five petri dishes containing trypticase soy agar. The plates were incubated at 20°C for 3-5 days when growth was harvested with sterile phosphate buffer (pH 6.8). The suspension was cold-centrifuged (10,000 rpm for 15 minutes) and washed with buffer three times. One (1.0) ml. of this suspension was used in the Warburg flasks. Substrate was mineral salts plus glucose. Chemicals were added in hexane

MONS 051232

TABLE XVI

Effects of Chemical Components on Respiration of Glucose by Mixed Culture

Test Chemical	Concentration mg./L.	Increase in Lag Period hours	Respiration Rate percent
Biphenyl	1	0	100
	10	0	100
	100	110	0
	1000	>200	0
Ethyl Hexanol	1	0	100
	10	13	68
	100	110	0
	1000	>200	0
Aroclor 1254	1	0	100
	10	0	110
	100	0	135
	1000	>200	0
1, 2, 4-TCB	1	10	94
	10	0	71
	100	0	47
	1000	>200	0
Methyl Naphthaline	1	10	94
	10	167	0
	1000	>200	0

MONS 051233

solution. Thermobarometers, glucose, hexane, and endogenous controls were set up in addition to the test chemicals. The results summarizing four (4) different tests are presented in Table XVI.

None of the components shown interfered with respiration at concentrations of 1.0 mg./L. (1000 p.p.b.). All, however, did increase lag period and decrease respiration rate at a concentration of 1000 mg./L.

Growth Inhibition

In addition to determining the effects of these components on respiration of microorganisms, an experiment was conducted to determine the effects of the chemicals on growth of the same activated sludge mixed culture suspension on glucose-mineral salts in tubes. Levels of growth after 1, 3, and 5 days was determined visually with the expectation that any significant effects would be subject to subsequent confirmation using turbidometric measurements. The results are presented in Table XVII.

The major control was the system containing Glucose + Mineral Salts + Cells + Hexane since all other chemicals were dissolved in the hexane. In comparison, some stimulation of growth was evident with 1.0 ppm 1,3,5-TCB and 1,2,4-TCB, 1-10 ppm Ethyl Hexanol, and 1.0 ppm Aroclor 1254. Indications of growth inhibition after three days were observed in the presence of 1-10 ppm methyl naphthalene, 10 ppm Aroclor 1254 and 10 ppm 1,3,5-TCB.

Activated Sludge B.O.D.

An experiment was conducted to determine the effect of the chemicals on initial Biochemical Oxygen Demand of diluted (1/10 strength) Cobb Co. WTF Activated Sludge Mixed Liquor. After dilution, the ML was aerated violently for one hour and delivered into 1000 ml. graduated cylinders

MONS 051234

TABLE XVII

Effects of Chemical Components on Growth of Mixed Culture on Glucose

Test System	Concentration mg./L.	Growth* after (days) 1	3	5
Hexane + Min. Salts	-	O	O	O
Hexane + Cells	-	O	O	O
Glucose + M.S. + Cells	-	T	M	A
Glucose + M.S. + Cells + Hexane	-	O	M	M
ALL + Biphenyl	1	O	M	M
	10	O	M	M
+ 1,3,5-TCB	1	T	M	M
	10	O	T	T
+1,2,4-TCB	1	T	M	M
	10	O	M	M
+Methyl Naphthalene	1	O	T	M
	10	O	T	M
+Ethyl Hexanol	1	T	M	M
	10	T	M	M
+Aroclor 1254	1	T	M	T
	10	O	T	M

*O = no growth, T = trace, M = moderate, A = abundant

MONS 051235

containing 1.0 mg./L. or 10 mg./L. of each chemical. These were allowed to stand with no agitation other than to measure, for a period up to 24 hours, the decreasing dissolved oxygen concentration in the samples using a YSI Dissolved Oxygen probe and monitor. These results are presented in Table XVIII. Calculated oxygen demand values were derived from this and are presented in Table XIX. These data show that (1) only the phenol control showed significant inhibition of B.O.D. and (2) 1,2,4-TCB may be utilizable in respiration, indicated by a higher B.O.D. at 10.0 ppm than the controls.

Bio-utilization of Chemicals

An experiment was conducted in which six test chemicals were tested separately, as sole carbon sources available, for their ability to support microbial growth.

Small Warburg Respirometer flasks (no sidcarms) were the reaction vessels used. Mineral salts broth and a washed cell suspension (derived from Activated Sludge and diluted until not visibly turbid) were placed in the reaction compartment of the flask. The test chemicals were placed in the center well, at reagent grade strengths. (The three (3) Arochlors used were first placed in the well, evaporated to eliminate the hexane in which they had been dissolved, and then distilled H_2O was added to the Arochlor residue). Filter paper strips (previously extracted in hexane to remove organic impurities, then dried in an oven) were placed in the center wells to enhance volatility rates. The results of this experiment are presented in Table XX.

It seems that the Arochlors are either not able to be utilized as a carbon source for growth, or perhaps they are simply not volatile enough to have become interspersed in the media containing the cell suspension.

MONS 051236

TABLE XVIII

Effect of Chemicals on Activated Sludge B.O.D.

Test System - Chemical	Conc.	Dissolved O_2 after hours					
		0	1	2	3	19	24
		milligrams/Liter					
Act. Sludge (control)	-	7.6		6.5	5.9	0	
Act. Sludge + Hexane	1.0 ml.	6.8		5.6	4.8	0	
Act. Sludge + Phenol	0.1 %	7.9		6.8	6.4	4.1	
Act. Sludge + Biphenyl	1.0 ppm	6.5		5.5	4.8	0	
Act. Sludge Ar 1254	1.0 ppm	6.3		5.4	4.7	0	
Act. Sludge Bt. Hexanol	1.0 ppm	6.3		5.5	4.8	0	
Act. Sludge 1, 3, 5 TCB	1.0 ppm	6.6		5.6	4.8	0	
Act. Sludge 1, 2, 4 TCB	1.0 ppm	6.5		5.5	4.7	0	
Act. Sludge Meth. Naph.	1.0 ppm	6.4		5.4	4.8	0	
Act. Sludge + (control)		7.9	7.4		2.6		0.7
Act. Sludge + Hexane	10 ml.	7.7	6.6		2.1		0
Act. Sludge + Phenol	0.2%	8.6	7.8		6.2		5.2
Act. Sludge + Biphenyl	10.0 ppm	7.6	6.8		25		0
Act. Sludge Ar 1254	10.0 ppm	8.2	7.1		29		0.3
Act. Sludge Bt. Hexanol	10.0 ppm	7.7	6.6		19		0
Act. Sludge 1, 3, 5 TCB	10.0 ppm	7.8	6.7		23		0
Act. Sludge 1, 2, 4 TCB	10.0 ppm	7.8	7.0		0.8		0
Act. Sludge Meth. Naph.	10.0 ppm	8.0	7.1		2.1		0

MONS 051237

TABLE XIX

Oxygen Demand of Activated Sludge in Presence of Various Chemicals

Test System	Chemical	Conc.	Oxygen Demand After (hours) 1	2	3	19	24
			milligrams per liter				
Act. Sludge	Control	-		1.1	1.7	>7.6	
	Control	-	0.5		5.3		7.2
Act. Sludge	Hexane	1.0 ml.		1.2	2.0	>6.8	
	Hexane	10.0 ml.	1.1		5.6		>7.7
Act. Sludge	Phenol	0.1%		1.1	1.5	3.8	
	Phenol	0.2%	0.8		2.4		3.4
Act. Sludge	Biphenyl	1.0 ppm		1.0	1.7	>6.5	
		10.0	0.8		5.1		>7.6
Act. Sludge	Ar 1254	1.0		0.9	1.6	>6.3	
		10.0	1.2		5.3		7.9
Act. Sludge	Et. Hexanol	1.0		0.8	1.5	>6.3	
		10.0	1.1		5.8		>7.7
Act. Sludge	1, 3, 5-TCB	1.0		1.0	1.8	>6.6	
		10.0	1.1		5.5		>7.8
Act. Sludge	1, 2, 4-TCB	1.0		1.0	1.8	>6.5	
		10.0	0.8		7.0		>7.8
Act. Sludge	Meth. Naph.	1.0		1.0	1.6	>6.4	
		10.0	0.9		5.9		>8.0

MONS 051238

TABLE XX

Utilization of Test Chemicals as Sole Carbon Source*

Test Chemical	Motility	Gram Stain
Biphenyl	+	Small - rods
1, 2, 4-TCB	+	Small - rods
1, 3, 5-TCB	-	Small - rods, dense clumps
2-ethyl hexanol	+	Small - rods, few cells
Methyl naphthalene	+	Small - rods, dense clumps, very turbid
Aroclor 1221	+	Small - rods, good growth
1248	+	Small - rods, very little growth
1254	+	Small - rods, very little growth

*Observed after three days

MONS 051239

(Arochlor 1221 seems to exhibit slightly more growth than the other Arochlors.) The other test chemicals seemed to exhibit at least slight growth-promoting ability.

Final Chlorination Effects on Secondary Effluent B.O.D.

It has previously been shown that the Calhoun composite influent and final effluent samples obtained on 3/24-3/25/74 had B.O.D. values of 47 and 7 mg./L., respectively. Effluent B.O.D. analysis was repeated the following week and the result was 9 mg./L. An additional automatic composite was made of the Secondary Clarifier Effluent and this had a B.O.D. of 42 mg./L.

The B.O.D. of influent and final effluent originally seemed very low and showed an unexpected B.O.D. reduction in the plant considering that solids were neither being built-up nor wasted, the more turbid appearance of the effluent, and the results of microscopic examination. It is significant that the B.O.D. on secondary clarifier effluent is much higher than the final (chlorinated) effluent, and that if this is used as a basis for determining aeration basin performance, then B.O.D. reduction would be 15 percent rather than 85 percent as previously reported. The Calhoun plant has been chlorinated at a rate of 100 (weekend) to 600 pounds per day. These results suggest that chlorination was affecting the progression of Biochemical Oxygen Demand in the Final Effluent samples, either through oxidative destruction of organic material or the formation of toxic chlorinated organics which retard respiration of the substrate.

An analysis has been made of the specific data on B.O.D. values with various dilutions of secondary and final (chlorinated) effluents obtained during October, 1974. No evidence for a "sliding scale" (decreasing oxygen demand with increasing sample concentration) has been observed.

MONS 051240

However, the average B.O.D. values of the three composites of Calhoun Secondary Clarifier Effluent and Final Effluent were 93 mg./L. and 63 mg./L., respectively. It would be difficult to explain this reduction in B.O.D. either on the basis of the process per se or on the oxidizable potential of the chlorine in amounts used. Thus, at least on certain days, chlorination of Secondary Clarifier Effluents results in a lower Final Effluent B.O.D. value and would indicate greater than actual B.O.D. removal efficiency.

A summary of the research literature (8, 9, 10) concerning metabolism of Biphenyl by certain microorganisms is presented in Figure 2, which shows metabolic pathways used by single bacterial or fungal species.

During February, 1975, the undersigned consulted with Dr. Gary Sloan at the University of Alabama in Tuscaloosa. He cam from Gibson's lab where the work on Beijerinckia was performed. Dr. Sloan has cultures of environmentally-isolated bacteria growing on biphenyl as a sole carbon and energy source.

We have obtained a growing culture of biphenyl-utilizing bacteria from the Cobb County mixed liquor within seven days where the biphenyl was allowed to dissolve from the gas phase into an inoculated mineral salts medium. Efforts to obtain similar results with the PCB's and other textile processing chemicals have so far been unsuccessful but are still in progress.

Ahmed and Focht (11) have reported on the isolation, from sewage effluent of two species of Achromobacter which use parachlorobiphenyl and biphenyl as sole carbon sources. They indicate hydroxylation (oxidation) of the ring as a metabolic prelude to ring cleavage. Phenylphenol or other oxidized biphenyl species may be more easily chlorinated than biphenyl per se. This possibility warrants further investigation.

MONS 051241

Fig. 2

Metabolic conversion of biphenyl by several microorganisms.

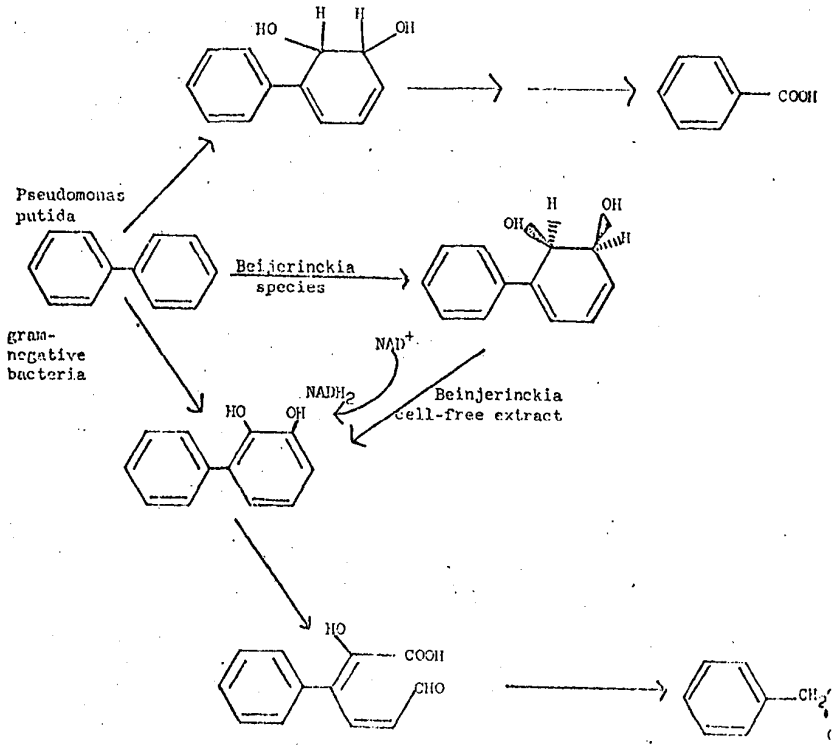

MONS 051242

Iwata, Y. et al (12) have reported on the persistance of Aroclor 1254 in various soils. The lower weight isomers showed some loss over a period of a year but this may have been due to volatibility rather than attack by soil microorganisms. Composition of environmentally-derived PCB's in water samples for instance may not conform in GLC patterns to recognizable standards. Therefore, environmental samples should be matched against GLC patterns with known isomers, according to these authors.

Keil and Santifer (13) have shown that concentrations of up to 1000 ppm of Aroclor 1242 failed to inhibit growth of Escherichia coli on TSB agar. The addition of 0.01 and 0.1 ppb stimulated growth above control levels.

The results of a study by Fries (14) are presented in Table XXI and show that biphenyl was degrated fully whereas PCB degration by Activated Sludge decreased with increasing substitution of chlorine or high molecular weight isomers in the Aroclors investigated.

In two important papers, Cooley et al (15, 16) have shown significant growth rate reduction, population density reduction, and biological accumulation of Aroclors 1248, 1254, and 1254 by Tetrahymena pyriformis, a common environmental ciliated protozoan, similar to many such organisms which are effective in waste treatment systems. The ability of the ciliates to concentrate these compounds would permit the toxicants to enter into and be transferred through food chains. In this manner the compounds could exert toxic effects at the protozoan or higher trophic levels. It would be desirable to set up lab-scale trickling filter and activated sludge systems to determine similar effects on these higher organisms.

TABLE XXI

Degradation of PCB by Activated Sludge

Substrate	% Chlorine	% Degradation in 47-hour cycle
Biphenyl	0	100
Aroclor 1221	21	80.6 ± 5.7
Aroclor 1016	41	32.9 ± 13.8
Aroclor 1242	42	26.3 ± 15.5
Aroclor 1254	54	15.2 ± 37.7

MONS 051244

Fish Bioassay

Two Aroclors and the other textile-processing chemicals under investigation were tested against shiners (Notemigonus chrysoleucas) in stationary-type tests at three different concentrations for each component. The fish were acclimated in the laboratory for at least 10 days prior to testing and were not fed for four (4) days prior to testing. Deionized water with a specific conductivity level of less than 15 ohms was used. Five gallon tanks were used and ten (10) shiners were tested against each concentration of chemical. Sufficient control tanks were set up to assure the reliability of the test system. Dissolved oxygen level was monitored with a YSI probe. The test method conformed to the criteria outlined in Standard Methods.

In addition to shiners which are top-water fish, catfish (Ictalurus punctatus) have also been tested against Biphenyl and Aroclor 1254. Similar tests against the remaining components will be reported in a supplement to this report.

The results showing the concentrations tested and the TD_{50} values are presented in Table XXII.

SUMMARY AND CONCLUSIONS

1) The presence of di- and trichlorobenzens has been confirmed and the possible presence of chloro-biphenyls has been indicated in numerous water plant samples.

2) The concentrations of these textile processing chemicals entering with the influent to municipal waste treatment plants are low (probably due mainly to volatility and dilution) and, with few exceptions, are considerably reduced further during treatment (volatility, adsorption, or degradation).

MONS 051245

TABLE XXII

TD_{50} Values for Aroclors and Textile Processing Chemicals

SHINERS

Component	Test Concentrations micrograms/Liter	TD_{50} micrograms/Liter
Aroclor 1221	10, 100, 1000	>1000
Aroclor 1254	1, 10, 100, 1000	>1000
Biphenyl	10, 100, 1000, 10,000	1000 to 10,000
Ethyl Hexanol	10, 100, 1000	>1000
1, 2, 4-Trichlorobenzene	10, 100, 1000	>1000
1, 3, 5-Trichlorobenzene	10, 100, 1000	>1000
Methyl Naphthalene	10, 100, 1000	>1000
Methyl Benzthiazole	10, 100, 1000	>1000
Nonyl Phenol	10, 100, 1000	±50
	CATFISH	
Aroclor 1254	10, 100, 1000	>1000
Biphenyl	10, 100, 1000	>1000

MONS 051246

3). The data obtained would indicate no significant interference on the part of these chemicals with bacterial activity, but that inhibition of treatment processes may occur at higher trophic levels, i.e. protozoa and rotifers

4) When tested individually, the chemicals used and in the concentrations observed would not constitute a hazard to shiners or catfish. The possibility of synergistic or chronic effects was not investigated, nor were TD_{50} tests on effluents performed.

MONS 051247

Respectfully submitted:

Peter W. Geffroy, Ph.D.
Project Director
31 March 1975.

BIBLIOGRAPHY

(1) Arnold, L. G., "Forecasting Quantity of Dyestuffs and Auxillary Chemicals Discharged into Georgia Streams by the Textile Industry," M.S. Thesis, Ga. Inst. Tech., (1967).

(2) Gaffney, P.E., June: 1974 Progress Report - calculated on data from: Flege, R. K., "Determination of Degraded Dyes and Auxillary Chemicals in Effluents from Textile Dyeing Processes," Ga. Inst. Tech., ERC-0270, p. 28, 1971.

(3) D. W. Hill and A. W. Garrison, "Textile Pollution Research at the Southeast Water Laboratory," AATCC Symposium, 1971 "The Textile Industry and the Environment."

(4) Letter: U. S. EPA to Georgia Water Quality Control Board, 1969.

(5) Tincher, W. C., "Effect of Polyestor Fiber Processing Effluents on Water Quality," OWRR Project No. A-043-Ga., ERC, Ga. Inst. Tech., 1973.

(6) Personal communication with Georgia EPD, 1974.

(7) Gaffney, P. E. "PCB's: Another Source," Science, 183 (4123), 367-368 (1974).

(8) Gibson, D. T. et al, "Oxidation of Biphenyl by a Beijerinckia Species", Biochem. Biophy. Res. Comm., 50, 2, p. 211 (1973).

(9) Risebrough, R. W. and deLappe, B., Environmental Health Persnec., 1, 39 (1972).

(10) Lunt, D. and Evans, W. C., Biochem. J., 118, 54P (1970).

(11) Ahmed, M. and Focht, D. D., "Degradation of Polychlorinated Biphenyls by Two Species of Acromobacter," Can. J. of Microbiol., 19, 47-52 (1973).

(12) Iwata, Y. et al, "Varying Persistance of Polychlorinated Biphenyls in Six California Soils Under Laboratory Conditions," Bull. Envirn. Contam. and Tox., 9, 4, 204 (1973).

(13) Keil, J. E. et al, "DDT and Polychlorinated Biphenyl (Aroclor 1242) Effects of Uptake on E. coli Growth", Water Research, 6, 837-841 (1972).

(14) Fries, G. F., Adv. Chem. Ser., 111, 256 (1972).

(15) Cooley, N. R. et al, "Mirex and Aroclor 1254: Effect on and Accumulation by Tetrahymena pyriformis Strain W," J. Protozool., 19, 4, 636-639 (1972).

(16) Cooley, N. R. et al, "The Polychlorinated Biphenyls, Aroclor 1248 and 1260: Effect on and Accumulation by Tetrahymena pyriformis," J. Protozool., 20, 3, 443-445 (1973).

MONS 051248

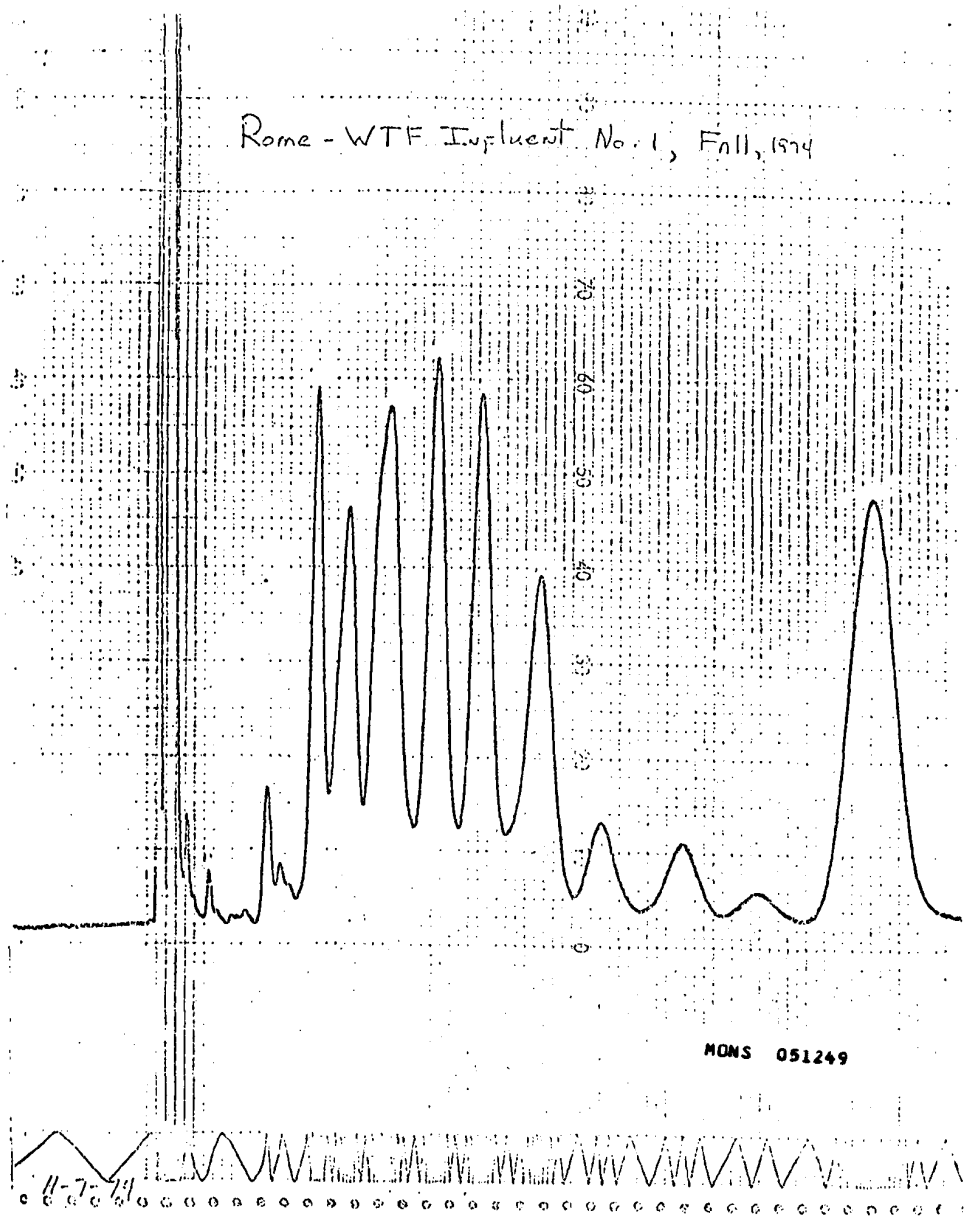
Rome - WTF Influent No. 1, Fall, 1974
MONS 051249
11-7-74

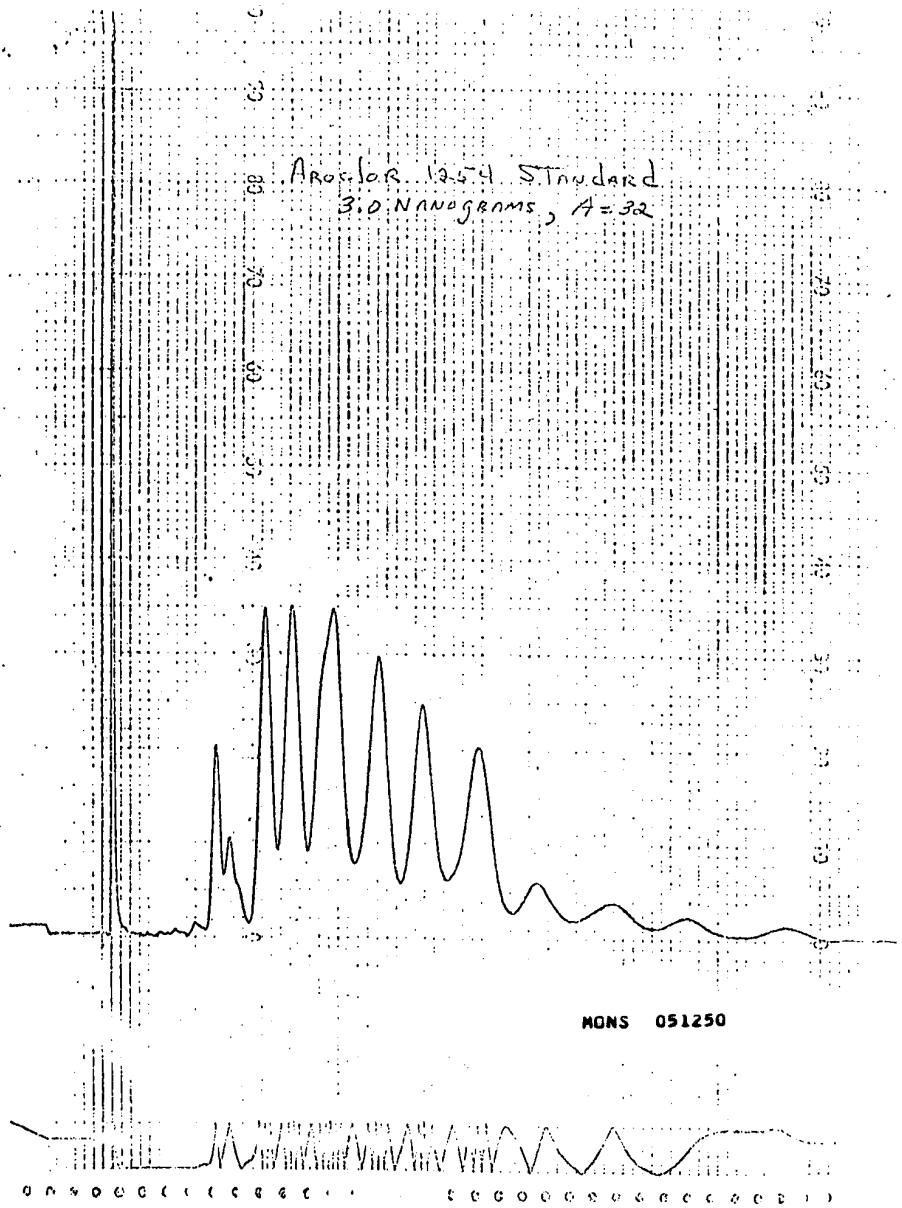
Aroclor 1254 Standard
3.0 Nanograms, A=32
MONS 051250

BIODEGRADATION STUDY

METHOD: A standard mixture containing various concentrations of nine (9) different components was introduced into clean half-gallon jugs and allowed to stand (open) for 24 hours in order to evaporate the hexane carrier. The jugs were then filled with standard B.O.D. dilution water containing 1.0% by volume of either Cobb County or Dalton settled sewage seed. Control jugs which had received only the chemicals and test jugs were extracted after zero, 24, and 135 hours with hexane. Extracts were analyzed by Gas Chromatography using both Flame-ionization and Electron-Capture detectors.

RESULTS: The data, showing the percent recovery is presented in Table I. After 135 hours, the concentration of all components was reduced (by 25-100%) by organisms in the Dalton sewage, whereas reduction of only Ethyl hexane, biphenyl, and Aroclor 1221 occured with Cobb County sewage. In 24 hours, there was no reduction of any component with Cobb County sewage; all but two components showed some reduction (20-100 per cent) with Dalton sewage seed. In summary, organisms in the Dalton sewage were more acclimated toward metabolizing the chemical components and all components were at least partially degraded. No ethyl hexane or biphenyl remained after 135 hours using Dalton sewage as seed.

TABLE I

BIODEGRADATION OF ORGANIC COMPONENTS

1.0% Sewage Seed

Component	Conc. mg./l.	Cobb Co. 24 hrs.	Cobb Co. 135 hrs.	Dalton 24 hrs.	Dalton 135 hrs.
Ethyl Hexanol	0.1	100	0	0	0
1,3,5 - Trichlorobenzene	1.0	100	100	80	53
1,2,4 - Trichlorobenzene	0.1	100	100	78	44
Methyl Naphthlene	0.1	100	100	16	5
Biphenyl	1.0	100	21	13	0
Methyl Benzthiazole	1.0	100	100	100	75
Nonyl Phenol	1.0	100	100	100	55
Aroclor 1221	0.1	100	88	51	6
Aroclor 1254	0.05	100	100	48	57

peg, 6/75

MONS 051252

SUPPLEMENTARY (PRIVILEDGED) INFORMATION

The data in Table I show the results of an experiment using biphenyl and with and without iron (in the form of ferric chloride), mixed in equal quantities with an aqueous solution of chlorine, and allowed to react by shaking for various periods of time at room temperature. Concentrations of all components were extremely high and far exceeded that which may be found under field conditions. The object of this experiment was simply to determine if electron-capture peaks (? chlorinated biphenyls) would be produced in the presence and absence of ferric ion. This data shows that a significantly greater number of peaks were achieved in the presence of biphenyl and biphenyl plus ferric ion as compared to the number and magnitude of peaks obtained by chlorinating hexane alone.

A similar experiment was conducted using far lower concentrations in a distilled water system. The results of this investigation were unsuccessful. It may be possible that some wastewater component may have the effect of catalyzing or otherwise enhancing the substitution or addition reaction of chlorine and biphenyl.

The data in Table II shows the results of an experiment using samples of Dalton influent, secondary clarifier effluent, and final effluent. Samples were "spiked" with an excess of biphenyl (greater than 10 ppm) and approximately 2.5 ppm chlorine, mixed, and allowed to stand for several hours. Electron capture analysis of the extracts showed a higher number of peaks in each case. It was possible to compare several peaks with presently available chlorobiphenyl standards. This comparison is presented in Table III. There was some variation in the 2,4-dichlorobiphenyl data which requires repeat analysis.

Considering (in Table II) only those peaks with a height greater than 5% of scale, the following may be seen:

	number of peaks
Influent, control	6
Influent, spiked	13
Secondary Effluent, control	5
Secondary Effluent, spiked	7
Final Effluent, control	5
Final Effluent, spiked	15

Considering all peaks, the increase (due to addition of chlorine and biphenyl) in the sum of peak heights in the influent, secondary, and final effluent samples was greater than 68%, 82%, and 164%, respectively.

TABLE I

Electron-Capture Peaks* Resulting from Chlorination of Biphenyl

(Ten minute reaction time)

Hexane (control)	Equal volumes of (aqueous) 5000 mg./L. chlorine plus- Hexane + 1000 ppb Biphenyl	Hexane + 1000 ppb Biphenyl + 1 ppm Fe^{+++}
Retention Time (in 1/10 minutes)/Peak Height (% scale)		
3/1600	2/4850	3/5400
7/6	3/1070	7/180
13/3	5/176	11/78
17/1	6/48	12/72
	8/34	16/11
	12/19	25/11
	23/7	27/15
	25/7	30/11
	27/7	34/21
	33/9	38/10
	37/6	43/7
	48/7	48/12
	52/10	53/22
	91/4	60/6
	169/2	66/6
		73/5
		93/10
		102/6
Total number of Peaks		
4	15	18

*One (1) microliter injection; attenuation = 16

MONS 051255

TABLE 11

Increase of Electron-Capture Peaks* in Spiked Samples

Influent	Spiked Influent	Secondary Clarifier	Spiked Clarifier	Final Effluent	Spiked Effluent
4/74	4/ 100	1/50	2/46	4/30	2/30
5/93	6/7	4/26	3/12	5/22	3/54
6/ 100	8/2	5/20	4/55	6/4	4/62
7/36	13/3	6/4	6/55	9/4	6/43
12/2	16/35	8/4	7/2	22/79	20/17
15/3	21/120	21/51	20/15	26/12	25/86
17/2	33/71	26/4	25/82	43/3	31/1
23/16	39/5	30/1	31/1	48/2	40/5
26/2	44/22	32/1	39/5	233/6	46/10
28/1	48/17	43/4	41/4		52/3
34/1	55/15	51/1	46/10		62/1
45/1	67/6	98/1	51/1		74/3
160/6	72/3	234/7	96/1		80/10
	88/3		288/1		90/11
	98/54				95/12
	104/18				109/3
	120/7				114/5
	156/1				123/10
	234/7				143/15
	368/2				156/6
					179/8
					200/9
					227/1
					255/2
					288/2

*Presented as retention time/peak height (% scale)

MONS 051256

TABLE III

Production of Chlorobiphenyl Peaks in Spiked Samples

CHEMICALS	SAMPLES					
	Influent	Spiked Inf.	2nd Clarifier	Spiked Clar.	Final Eff.	Spiked Eff.
2-chlorobiphenyl	12/2	13/2	none	none	none	none
2-4' dichloro-biphenyl	23/16	21/120	21/51	20/15	22/79	20/17
			26/4	25/82	26/12	25/86
4-4' dichloro-biphenyl	34/1	33/71	none	none	none	none
parachloro-biphenyl	17/2	16/35	none	none	none	none

No standards available for: 3,5-dichlorobiphenyl, decachlorobiphenyl, 2,3,4-trichlorobiphenyl