American Water Works Association

ANSI/AWWA C400-80
(Revision of AWWA C400-77)

AWWA STANDARD

for

ASBESTOS-CEMENT DISTRIBUTION PIPE, 4 IN. THROUGH 16 IN. (100 mm THROUGH 400 mm) NPS, FOR WATER AND OTHER LIQUIDS

AMERICAN NATIONAL STANDARD

First edition approved by AWWA Board of Directors May 15, 1953.
This edition approved Jun. 15, 1980.

Approved by American National Standards Institute, Inc., Feb. 19, 1981.

AMERICAN WATER WORKS ASSOCIATION
6666 West Quincy Avenue, Denver, Colorado 80235

Committee Personnel

The Standards Committee on Asbestos–Cement Pressure Pipe that reviewed and approved this standard had the following personnel at the time of approval:

R. S. BRYANT, *Chairman*
J. L. WARDEN, *Vice-Chairman*
T. R. GILLEN, *Secretary*

Consumer Members

S. C. BAKER, Naval Facilities Engineering Command, Alexandria, VA	(NAVFAC)
GLENWOOD BRETZ,* Civil Engineer, Port Hueneme, CA	(NAVFAC)
R. S. BRYANT,* Department of Water & Power, Los Angeles, CA	(ASCE)
F. G. DENSON, Works & Operations Department, Winnipeg, Manitoba	(AWWA)
ROGER GRAFF, City of San Diego, San Diego, CA	(AWWA)
J. E. JOHNSON,* U.S. Water & Power Resources Services, Denver, CO	(USWPRS)
W. J. KELLER,* Water Department, Rapid City, SD	(AWWA)
R. A. MARCHAND, Water Department, Warren, OH	(AWWA)
J. L. WARDEN, U.S. Water & Power Resources Services, Denver, CO	(USWPRS)

General Interest Members

G. C. ANDERSON, Insurance Services Office, New York, NY	(ISO)
R. A. BARROWS, C. E. Maguire, Inc., Waltham, MA	(NEWWA)
V. R. BICKEL, Department of Environmental Health, Albuquerque, NM	(APWA)
S. L. BISHOP,* Metcalf & Eddy, Boston, MA	(NEWWA)
T. J. BROWN, JR., Factory Mutual Research Corp., Norwood, MA	(FMR)
C. W. CLINE,* Thompson & Litton, Inc., Norton, VA	(AWWA)
L. J. DOSEDLO, Underwriters Lab, Northbrook, IL	(UL)
C. L. FRICK,* Insurance Services Office, Atlanta, GA	(ISO)
R. S. HOLMGREN, JR., James M. Montgomery, Pasadena, CA	(AWWA)
L. L. LYLES, W. M. Lyles Co., Visalia, CA	(AWWA)
F. A. OBERT, Metcalf & Eddy, Boston, MA	(WPCF)
M. R. SUCHOMEL,* Underwriters Laboratories, Northbrook, IL	(UL)
W. TAGGART, Wright–McLaughlin Engineering, Denver, CO	(ASCE)
J. R. WILLIAMS, McLean, VA	(AWWA)

*Alternate

©Copyright 1980 by American Water Works Association
Printed in US

Committee Personnel (continued)

Producer Members

J. F. BAKER, CertainTeed Products Corp., P & PG, Valley Forge, PA (AWWA)
F. V. CAMARDA, U.S. Steel Corp., Gary, IN (AWWA)
W. R. CARTER, Hersey Products, Inc., Dedham, MA (AWWA)
T. R. GILLEN, Johns-Manville Sales Corp., Denver, CO (AWWA)
GUSTAVO HERRERA, Asbestos Monterrey, S.A., Mexico (AWWA)
R. W. HOOD,* Hersey Products, Dedham, MA (AWWA)
LEO HORVATH,* Asbestos-Cement Pipe Producers Assn., Arlington, VA (ACPPA)
J. C. JACKSON, Asbestos-Cement Pipe Producers Assn., Arlington, VA (ACPPA)
R. P. KOROBIJ,* CertainTeed Products Corp., Valley Forge, PA (AWWA)
S. G. LEYSHOCK, Cement Asbestos Products, Birmingham, AL (AWWA)
H. L. OLSON,* Johns-Manville Sales Corp., Denver, CO (AWWA)

*Alternate

Table of Contents

SEC		PAGE
	Foreword	
I	History of Standard	v
II	Information Regarding Use of This Standard	v
III	Major Revisions	viii
IV	Metrication	viii
	Standard	
1	**General**	1
1.1	Scope	1
1.2	Definitions	1
1.3	Affidavit of Compliance	2
1.4	References	2
2	**Materials**	2
2.1	Composition	2
2.2	Physical Requirements	2
2.3	Chemical Requirements	4
3.	**Design**	4
3.1	Pipe Classes	4
3.2	Pipe Diameters	4
3.3	Pipe Lengths	4
3.4	Couplings	4
3.5	Joints	5
3.6	Wall Thickness	5
4	**Workmanship and Finish**	5
4.1	Imperfections	5
5	**Inspection, Testing, and Rejection**	5
5.1	Inspection	5
5.2	Physical Test Requirements	6
5.3	Retests (Physical) and Rejection	7
5.4	Test for Uncombined Calcium Hydroxide	7
5.5	Test Records	7
6	**Marking and Delivery**	7
6.1	Marking	7
6.2	Preparation for Shipment	8
	Tables	
F.1	Asbestos-Cement Pipe Type Recommended for Internal Water Aggressiveness	vi
F.2	Aggressiveness of Nonsulfate Acidic Soils to Asbestos-Cement Pipe	vi
F.3	Asbestos-Cement Pipe Type Designation Chemical Resistance to Nonacid (pH + 7.0) Soluble Sulfates in Water and Soils	vi
F.4	Sulfate Aggressiveness in Water and Soil	viii
F.5	Metric Conversion Factors	viii
1	Flexural Test Loads	2
2	Design Internal Pressure and Design External Load	3
3	Wall Thickness Tolerance	5
4	Hydrostatic Tests	6
	Appendix	
	Dimensional Table of Fittings Ends Designed for Use with Asbestos-Cement Pressure Pipe	8

Foreword

This foreword is for information only and is not a part of AWWA C400.

I History of Standard

A new pipe material consisting of an intimate mixture of portland cement and asbestos fibers was introduced to the North American market in 1931 following several years of satisfactory usage in other countries, particularly Italy.

In the ensuing years this type of pipe gained popularity, and in 1949 AWWA established a committee on standard specifications for asbestos–cement pipe under the chairmanship of S. M. Clark of Greeley and Hansen, Chicago.

The committee developed a standard for asbestos–cement water pipe, which was approved by the AWWA Board of Directors as a tentative standard, AWWA C400-53T, May 15, 1953. In 1958 the committee was reactivated as Committee 8340D on Asbestos–Cement Pipe under the chairmanship of Roy H. Ritter of Whitman, Requardt and Associates, Baltimore, to review several suggested changes and to recommend revisions to the standard. The committee produced a revised tentative standard adopted by AWWA as C400-64T Jan. 27, 1964, which was advanced to standard without revision Jul. 2, 1965.

In 1968 the committee was reactivated as the Standards Committee on Asbestos–Cement Pipe to review and revise all AWWA standards on asbestos–cement pipe. The committee produced a revised standard approved by the Board of Directors Jan. 31, 1972 designated as AWWA C400-72, "Asbestos–Cement Pressure Pipe for Water and Other Liquids."

In 1972 and 1973 the committee was reorganized and enlarged to include representation of national organizations having an interest in the scope of the committee and wishing to participate in the work. The reorganized committee reaffirmed C400-72 without revision so that it could be presented to the American National Standards Institute for designation as an American National Standard.

In 1975 the committee produced a revised standard approved by the AWWA Board of Directors Jan. 26, 1975 designated as AWWA C400-75, "Asbestos–Cement Pressure Pipe, 4 in. Through 24 in., for Water and Other Liquids." At that same time a new standard was produced by the committee and approved by the AWWA Board of Directors and designated as AWWA C402-75, "Asbestos–Cement Transmission Pipe, 18 in. Through 42 in., for Water and Other Liquids."

The possibility of confusion between the two standards (C400 and C402) was carefully reviewed by the committee. The result was C400-77, which reduced the sizes covered from 4 in. through 24 in. to 4 in. through 16 in., eliminating any overlap between the standards.

In 1979 the committee again revised this standard to make reference to ASTM C500-77, "Testing Asbestos–Cement Pipe," and to include dimensional requirements for fittings in the Appendix.

II Information Regarding Use of This Standard

II.A *General.* When ordering pipe covered by this standard, local installation and operating conditions should be considered to determine the class and type of pipe to specify. Also, certain other items must be specified to describe completely the pipe required.

According to the conditions of installation and operation in many water distribution systems, the pipe may be used at operating pressures equal to the class

designations. The purchaser should determine for himself from AWWA C401, "Standard Practice for the Selection of Asbestos-Cement Distribution Pipe, 4 in. Through 16 in., for Water and Other Liquids," the proper class of pipe to be used under the installation and operating conditions that will exist for the project on which the pipe is to be used.

The purchaser is referred to AWWA C603, "Installation of Asbestos-Cement Pressure Pipe," for guidance in laying of the pipe.

II.B *Flexural load test.* The flexural load tests for pipe sizes, 4, 6, and 8 in. (Sec. 2.2.1 and 5.2.3) are intended only for use as a quality control test; not a simulated service test. Asbestos-cement pipe will not be subjected to flexural stresses if properly installed with satisfactory bedding methods.

For diameters 10 in. and larger, the wall thickness increases to a point at which the flexural strength is not a controlling factor, and hence, routine testing is not required.

II.C *Type of pipe.* The following criteria are presented for determining the type of pipe to be used under various soil and water conditions. Each condition should be considered separately even though each may exist in combination with others. These criteria are based on exposures within the temperature range of 40–80° F (5–28° C). For exposure of pipe to temperatures beyond these limits, consult the manufacturer.

The following criteria are referenced as

1. Internal water (Table F.1).
2. External water (Table F.2).
3. Nonacid soluble sulfates—internal and external (Table F.3).
4. Acid soluble sulfates—internal and external.

II.C.1 *Internal water.* Aggressiveness of water transported through asbestos-cement pipe is related to the type of designation of asbestos-cement pipe

TABLE F.1

Asbestos-Cement Pipe Type Recommended for Internal Water Aggressiveness

Internal Water Aggressiveness	Recommended Pipe Type*
Highly aggressive	†
Moderately aggressive	II
Nonaggressive	I and II

* Type I—no limit on uncombined calcium hydroxide; Type II—per cent or less uncombined calcium hydroxide.

† The serviceability of pipe for such applications should be established by the purchaser in conjunction with the manufacturer.

TABLE F.2

Aggressiveness of Nonsulfate Acidic Soils to Asbestos-Cement Pipe

Water Conditions Within the Soil Environment	Minimum pH of Acidic Soils When Using Asbestos-Cement Pipe	
	Type I	Type II
Essentially quiescent	5.0	4.0
Mildly fluctuating	5.5	5.0
Rapidly moving or grossly cyclic	6.3	5.5

TABLE F.3

Asbestos-Cement Pipe Type Designation Chemical Resistance to Nonacid (pH = 7.0) Soluble Sulfates in Water and Soils

Type Designation	Chemical Resistance to Nonacid Soluble Sulfates in Water and Soils
I*	Will be attacked to various degrees by all but the nonaggressive levels of sulfate concentrations in waters and soils.
II	Resistant to all levels of soluble sulfates.

*The guideline criteria for sulfate resistance of Type I pipe were taken from the *Concrete Manual*, 8th edition, Bureau of Reclamation, 1974. Sulfate resistance here applies to all soluble sulfates regardless of the cation.

suitable for such use in Table F.1. Aggressiveness of water is defined as follows.

a. Highly aggressive:
$pH + \log (AH) < 10.0$
b. Moderately aggressive:
$pH + \log (AH) = 10.0 - 11.9$
c. Nonaggressive:
$pH + \log (AH) \geq 12.0$

where

pH = Index of acidity (or alkalinity) of the water—standard pH units.
A = Total alkalinity—ppm (mg/L) as $CaCO_3$.
H = Calcium hardness—ppm (mg/L) as $CaCO_3$.

It should be recognized that water that has a $pH + \log (AH)$ less than or equal to 10 is an extremely aggressive water and would be very corrosive to almost all materials found in a typical water system, including the plumbing in consumers' homes. Such waters should be treated to increase pH or hardness to protect the entire network of materials making up the system. If such water treatment is not undertaken, the manufacturer of each item used in the water system should be consulted for recommendations regarding the use of his product in an extremely corrosive environment.

NOTE: The expression $pH + \log (AH)$ is a modification of the Langelier Index. It has been prepared so that the aggressiveness of the water can be determined easily. A reasonable comparison of the two would be as indicated below.

	$pH + \log (AH)$	Langelier Index
Highly aggressive water	<10.0	< -2.0
Moderately aggressive water	10.0–11.9	-2.0 to -0.1
Nonaggressive water	≥12.0	≥0

II.C.2 *External water.* Aggressiveness of external water (water within the soil environment) is related to asbestos-cement pipe in Table F.2. The guidelines for the use of asbestos-cement pipe in nonsulfate acidic soils are based upon minimum pH factors alone. Asbestos-cement pipe may or may not perform satisfactorily in acidic soil environments that have pH values below those listed in Table F.2. To determine the suitability of asbestos-cement pipe in soils having lower pH values, each situation should be evaluated individually and take into consideration all aspects of soil environment that affect asbestos-cement pipe corrosiveness.

II.C.3 *Nonacid soluble sulfates—internal and external.* Aggressiveness of nonacid (pH≥7.0) soluble sulfates in water and soils is related to the type designation of asbestos-cement pipe suitable for such use in Table F.3. Sulfate aggressiveness in water and soil can be classified as indicated in Table F.4.

II.C.4 *Acid soluble sulfates—internal and external.* Aggressiveness of acid (pH<7.0) soluble sulfate waters and soils to asbestos-cement pipe must be evaluated independently.

Acid sulfate soils and waters, whether the acid is inorganic or organic, must be evaluated independently of the criteria and guidelines set forth in Sec. II.C.2 and II.C.3 and must take into consideration soil permeability and other factors. Consult the manufacturer for guidance.

II.D *Supplementary specifications.* The following information summarizes the conditions and items that the purchaser should consider when preparing his supplementary specifications. The section in the standard where they can be found is also listed.

1. The standard used; that is, AWWA C400.
2. Affidavit of compliance, if required (Sec. 1.3).
3. Type of pipe to be furnished (Sec. 2.3 and Foreword II.C).

TABLE F.4

Sulfate Aggressiveness in Water and Soil

	Water	Soil
Sulfate Aggressiveness Classification	Water Soluble Sulfates—*ppm* SO_4	Water Soluble Neutral Sulfates—*ppm* SO_4
Nonaggressive	150 and less	1000 and less
Mildly aggressive	150–1500	1000–2000
Moderately aggressive	1500–10,000	2000–20,000
Highly aggressive	10,000 and greater	20,000 and greater

TABLE F.5

Metric Conversion Factors

To Convert From US Customary Units	To Metric Units
Inches (in.) × 25.40	= Millimetres (mm)
× 2.54	= Centimetres (cm)
× 0.0254	= Metres (m)
Feet (ft) × 304.8	= Millimetres (mm)
× 30.48	= Centimetres (cm)
× 0.3048	= Metres (m)
Pounds (lb) × 0.4536	= Kilograms (kg)
Pounds per square inch (psi) × 6.9	= Kilopascals (kPa)
Pounds per linear foot (lb/lin–ft) × 1.488	= Kilograms per metre (kg/m)

4. Class of pipe (Sec. 3.1).
5. Nominal inside diameter (Sec. 3.2).
6. Lineal feet to be furnished in standard and random lengths (Sec. 3.3).
7. Number, size, type, class, lengths, and extent of machining of special short lengths (Sec. 3.3.3).
8. Whether inspection by the purchaser (Sec. 5.1) and special marking (Sec. 6.1.4) are required.

III Major Revisions

Major changes to the 1977 standard that were made in this revision are

1. Soft metric equivalents have been included.
2. Explanations of the test methods for hydrostatic, flexural and crushing requirements have been deleted and references have been made to ASTM C500, "Testing Asbestos–Cement Pipe."
3. A dimensional table of fittings for use with asbestos–cement pressure pipe has been added as Appendix A.

IV Metrication

The tables in this standard are stated in both US customary units and metric equivalents. Throughout the body of the standard, metric equivalents (rounded off) are set in parentheses next to the customary units. Metric conversion factors are listed in Table F.5.

American Water Works Association

AWWA C400-80
(Revision of AWWA C400-77)

AWWA Standard for

Asbestos-Cement Distribution Pipe, 4 in. Through 16 in. (100 mm Through 400 mm) NPS, for Water and Other Liquids

Section 1—General

Sec. 1.1 Scope

This standard covers three pressure classes of Type I and Type II asbestos-cement pipe, 4–16 in. (100 mm to 400 mm) in diameter for water and other liquids intended to be laid underground in public and private rights-of-way.

1.1.1 *Use.* Asbestos-cement distribution pipe is to be used in pipe systems having relatively unpredictable flows and many appurtenances that do not permit reasonable hydraulic analyses, including that for surge pressure.

1.1.2 *Pressure classes.* The pressure class designations of class 100, class 150, and class 200 are the same as those used in AWWA C401 (formerly AWWA H2), "Standard Practice for the Selection of Asbestos–Cement Distribution Pipe, 4 in. Through 16 in., for Water and Other Liquids."

Sec. 1.2 Definitions

The following definitions shall apply in this standard.

1.2.1 *Inspection.* Inspection of the pipe and the tests by the inspector.

1.2.2 *Inspector.* The authorized representative of the purchaser, entrusted with the duty of inspecting pipe produced and tests performed under this standard.

1.2.3 *Lot.* A lot as used herein is defined as all pipe of any one class, type, and size manufactured on any one machine in 24 hr but not to exceed 300 lengths.

1.2.4. *Manufacturer.* The person, firm, or corporation that manufactures the pipe.

1.2.5 *Operating pressure.* The maximum hydrostatic pressure to which the pipe will be subjected in normal operation after installation, exclusive of allowance for water hammer.

1.2.6 *Purchaser.* The person, firm, corporation, or government agency entering into a contract or agreement to purchase pipe according to the provisions of this standard.

Sec. 1.3 Affidavit of Compliance

Whether factory inspection has been required or not, the purchaser's supplemental specifications may require an affidavit of compliance from the manufacturer that the material furnished under the purchaser's order comply with all applicable requirements of this standard.

Sec. 1.4 References

This standard references the following documents. They form a part of this standard to the extent specified herein. In any case of conflict, the requirements of this standard shall prevail.

AWWA C401, "Standard Practice for the Selection of Asbestos-Cement Distribution Pipe, 4 in. Through 16 in., for Water and Other Liquids."

ASTM* C500, "Testing Asbestos-Cement Pipe."

ASTM D1869, "Specification for Rubber Rings for Asbestos-Cement Pipe."

*American Society for Testing and Materials
1916 Race St.
Philadelphia, PA 19103

Section 2—Materials

Sec. 2.1 Composition

Asbestos-cement pipe shall be composed of an intimate mixture of either (1) portland cement or portland blast furnace slag cement and asbestos fiber with or without silica, or (2) portland pozzolana cement and asbestos fiber. Both (1) and (2) can be with or without the addition of curing agents. The pipe shall be formed under pressure and cured. The finished pipe shall be free from organic materials.

Sec. 2.2 Physical Requirements

2.2.1 *Flexural strength.* Each length of pipe 10 ft (3 m) or longer for pipe sizes 8 in. (200 mm) and less shall have the minimum flexural strength prescribed in Table 1 when tested in accordance with the Flexural Test Proof Method as required in the latest edition of ASTM C500, "Testing Asbestos-Cement Pipe."

2.2.2 *Bursting strength.* Each length of pipe and each coupling sleeve shall

TABLE 1

Flexural Test Loads

Total Applied Load—*lb* (*N*)

Nominal Diameter		Class 100		Class 150		Class 200	
in.	(*mm*)	*lb*	(*N*)	*lb*	(*N*)	*lb*	(*N*)
4	(100)	1200	(5340)	1470	(6540)	1870	(8300)
6	(150)	2800	(12,500)	3700	(16,500)	4900	(21,800)
8	(200)	5330	(23,700)	7600	(33,800)	10,130	(45,100)

TABLE 2

*Design Internal Pressure and Design External Load**

Nominal Pipe Size		Class 100				Class 150				Class 200			
		Internal Pressure		External Load		Internal Pressure		External Load		Internal Pressure		External Load	
in.	*(mm)*	*psi*	*(k Pa)*	*lb/lin ft*	*(k N/m)*	*psi*	*(k Pa)*	*lb/lin ft*	*(k N/m)*	*psi*	*(k Pa)*	*lb/lin ft*	*(k N/m)*
4	(100)	417	(2900)	4100	(60)	616	(4200)	5400	(79)	809	(5600)	8700	(127)
6	(150)	441	(3000)	4000	(58)	632	(4400)	5400	(79)	815	(5600)	9000	(136)
8	(200)	472	(3300)	4000	(58)	653	(4500)	5500	(80)	824	(5700)	9300	(136)
10	(250)	490	(3400)	4400	(64)	650	(4500)	7000	(102)	826	(5700)	11,000	(161)
12	(300)	490	(3400)	5200	(76)	658	(4500)	7600	(111)	830	(5700)	11,800	(172)
14	(350)	500	(3400)	5200	(76)	650	(4500)	8600	(126)	826	(5700)	13,500	(197)
16	(400)	500	(3400)	5800	(85)	654	(4500)	9200	(134)	825	(5700)	15,400	(225)

*It is necessary to apply a load factor (see AWWA C401) to the three-edge bearing loads obtained in the crushing tests specified in Sec. 5.2.4 of this standard in order to correlate them to the field loads.

have sufficient strength to withstand the design internal pressure indicated for its class in Table 2 when subjected to the hydrostatic test procedure specified in this standard.

2.2.3 *Crushing strength.* Each length of pipe shall have sufficient strength to support the design external load indicated for its class in Table 2 when subjected to the crushing test procedure specified in this standard.

Sec. 2.3 Chemical Requirements

Pipe shall be designated as either Type I or Type II according to its content of uncombined calcium hydroxide as determined by the test procedures in this standard for uncombined calcium hydroxide. The requirements for each pipe are:

Type I—no limit on uncombined calcium hydroxide.

Type II—1 percent or less uncombined calcium hydroxide.

Section 3—Design

Sec. 3.1 Pipe Classes

Pipe supplied under this standard shall be made in one or more of the following classes: 100, 150, or 200.

Sec. 3.2 Pipe Diameters

Pipe shall be made with nominal inside diameters of 4, 6, 8, 10, 12, 14 and 16 in. (100, 150, 200, 250, 300, 350 and 400 mm, respectively). The average inside diameter of a standard or random pipe length shall not be less than the nominal diameter by more than 5 percent.

Sec. 3.3 Pipe Lengths

Pipe shall be produced in standard, random, and short lengths. At least 90 percent of the total footage (linear metres) of pipe of any class, type, size, excluding short lengths, shall be furnished in standard lengths. The remaining 10 percent may be in random lengths.

3.3.1 *Standard lengths.* Pipe is customarily furnished in standard lengths of 10 ft (3 m) or 13 ft (4 m) in 4, 6, and 8 in. (100, 150, and 200 mm, respectively) sizes, unless otherwise agreed upon at time of purchase. Sizes 10 in. (250 mm) and greater are customarily supplied in 13 ft (4 m) lengths, unless otherwise agreed upon at time of purchase. A maximum of 10 percent of each pipe size may be furnished in random lengths of not less than 7 ft (2 m). Short lengths for making connections to valves, fittings, or structures and for making closures shall be furnished as specified by the purchaser.

Sec. 3.4 Couplings

A coupling shall consist of an asbestos–cement sleeve of the same type and class as the pipe and two rubber rings or a device that has equal or better jointing characteristics, strength, and serviceability as that of an asbestos–cement coupling. The manufacturer shall submit specifications and drawings of alternate couplings to the purchaser for approval prior to manufacturing.

3.4.1 *Amount furnished.* One coupling of the same size and class as the pipe shall be furnished with each standard and random length of pipe.

3.4.2 *Rubber rings.* Rubber rings shall conform to the requirements of the latest edition of ASTM D1869, "Specification for Rubber Rings for Asbestos–Cement Pipe."

3.4.3 *Coupling areas.* Coupling areas

for all lengths of pipe shall be properly machined at ends or over their entire length to serve their intended purpose, as specified by the purchaser.

Sec. 3.5 Joints

Joints shall be capable of withstanding, without leakage, a hydrostatic pressure test as defined in Sec. 5.2.2.1.

Sec. 3.6 Wall Thickness

The wall thickness of the machined portion of any length of pipe shall not be less than the manufacturer's standard by the tolerance listed in Table 3.

TABLE 3
Wall Thickness Tolerance

Nominal Pipe Size		Wall Thickness Tolerance	
in.	*(mm)*	*in.*	*(mm)*
4–12	(100-300)	-0.06	(-1.5)
14–16	(350-400)	-0.12	(-3.0)

Section 4—Workmanship and Finish

Sec. 4.1 Imperfections

4.1.1 *Interior surfaces.* The inside surface of each length of pipe shall be free from bulges, dents, and tears that could result in a variation in diameter of more than 0.20 in. (5 mm) from the diameter of adjacent unaffected portions of the surface.

4.1.2 *Exterior surfaces.* Flaking on the exterior surface and edge of machined ends shall not extend back by more than 0.500 in. (13 mm) from the end, have a depth of more than 0.125 in. (3 mm) or extend around the perimeter for more than 0.500 in. (13 mm) at any one location.

4.1.3 *Straightness.* Each length of pipe shall not vary in straightness by more than 0.05 in./ft (4 mm/m) of length when the variation is measured as follows:

Measure the maximum ordinate from the exterior surface of the pipe by placing a straightedge or line that exceeds the pipe length against the exterior surface and measure the maximum distance from the exterior pipe to the straightedge or line.

Section 5—Inspection, Testing, and Rejection

Sec. 5.1 Inspection

5.1.1 *General.* Inspection by the purchaser shall not relieve the manufacturer of the responsibility to furnish material conforming in all aspects to the requirements of this standard.

5.1.2 *Notification.* If inspection is specified by the purchaser under paragraph 5.1.4, the manufacturer shall notify the purchaser in advance of the date, time, and place of testing of the pipe so that the purchaser may be represented at the test.

5.1.3 *Access.* The inspector shall have free access to those parts of the manufacturer's plant that are involved in work performed under this standard. The manufacturer shall afford him, without charge, all reasonable facilities for determining whether the pipe meets the requirements of this standard.

5.1.4 *Testing.* If inspection is specified by the purchaser, he may, at his option, witness any or all test phases. The pipe to be tested shall have passed the routine inspection and testing of this specification. The number of tests to be conducted for flexural strength (4, 6, and 8 in., or 100, 150, and 200 mm respectively), hydrostatic proof ($3\frac{1}{2}$ times class), and, when required, crushing strength shall be limited to 1 per each 300 standard lengths of each size, type, and class of pipe on the order. If uncombined calcium hydroxide tests are required, the number of tests will be one for each size, type, and class of pipe on the order. The purchaser or his authorized inspector may select the pipe to be tested. Retesting and rejection stipulations as shown in Sec. 5.3 shall apply.

Sec. 5.2 Physical Test Requirements

5.2.1 *Test specimens.* All pipe and couplings tested under this standard shall be in a normal air-dried condition when tested.

5.2.2 *Hydrostatic tests.*

5.2.2.1 Each standard, random, or short length of pipe and each coupling sleeve shall be tested under an internal hydrostatic pressure as shown for the proof test in Table 4 in accordance with hydrostatic proof test requirements of the latest edition of ASTM C500, "Testing Asbestos-Cement Pipe." Any pipe length or coupling sleeve showing leakage, sweating, or other defects shall be rejected.

TABLE 4

Hydrostatic Tests

Class	Proof Test*		Lot Test†	
	psi	(*k Pa*)	*psi*	(*k Pa*)
100	350	(2400)	400	(2800)
150	525	(3600)	600	(4100)
200	700	(4800)	800	(5500)

*Every length per paragraph 5.2.2.1.
†One per lot per paragraph 5.2.2.2.

5.2.2.2 From each lot that has passed the hydrostatic proof test, one standard length shall be hydrostatically tested to the lot test in Table 4 for that class in the manner specified in paragraph 5.2.2.1. Each length of the pipe so tested shall be retested in the manner and at the pressure specified in paragraph 5.2.2.1.

5.2.3 *Flexure tests.* Each standard length of pipe and each random length of more than 9.5 ft (2.8 m) having a nominal diameter of 4, 6, or 8 in., (100, 150, and 200 mm respectively), shall be tested in flexure in accordance with the latest edition of ASTM C500, "Testing Asbestos-Cement Pipe." Each pipe so tested shall support, without evidence of cracks or other defects, the applicable total load shown in Table 1.

5.2.4 *Crushing tests.* On lots containing more than 100 lengths of each size and class, one length from each 300 lengths or fraction thereof, shall be tested for crushing strength. If inspection by the purchaser has been specified, the length of pipe to be tested may be selected by the inspector. From each selected length, one unmachined section of pipe 1 ft (300 mm) long shall be cut. This section shall be tested for crushing strength in accordance with the latest edition of ASTM C500, "Testing Asbestos-Cement Pipe." The test section shall not fail until the total load applied meets or exceeds the applicable value shown in Table 2.

5.2.5 *Machines for testing.*

5.2.5.1 The machine used for the hydrostatic test shall have gaskets that seal the ends of the pipe, coupling, or pipe and coupling with factory assembled joint, but exert no end pressure. Couplings may be hydrostatically tested with a rubber bladder inside the couplings, and if so tested, each coupling shall have sufficient strength to withstand a test pressure of four times the class of the coupling.

5.2.5.2 The machines used for the flexure and crushing test shall be sub-

stantial and rigid throughout so that the distribution of the load shall not be appreciably affected by the deformation or yielding of any part of the machine.

Sec. 5.3 Retests (Physical) and Rejection

5.3.1 *Crushing strength.* The failure of any specimen tested for crushing strength to support 75 percent of the crushing load required in Table 2 shall be cause for rejection of that portion of the lot of that size, type, and class manufactured during the same shift as the test specimen. If any specimen tested for crushing strength supports more than 75 percent but less than 100 percent of the crushing load, then two additional pipe sections of the same size, type, and class manufactured during the same shift shall be subjected to the same crushing test. The additional lengths may be selected by the inspector if inspection by the purchaser has been specified. The failure of one of these additional specimens to meet the full crushing strength requirement shall be cause for rejection of that portion of the lot of that size, type, and class manufactured during the same shift as the test specimen.

5.3.2 *Hydrostatic tests.* If any pipe subjected to the hydrostatic tests specified in Sec. 5.2.2.2 fails to withstand the specified pressure, then two additional lengths of the same size and class manufactured during the same shift shall be subjected to the same hydrostatic test. The failure of one of these additional lengths to withstand the specified pressure shall be cause for rejection of that portion of the lot of that size, type, and class manufactured during the same shift as the test lengths.

Sec. 5.4 Test for Uncombined Calcium Hydroxide

The manufacturer shall perform this test as often as necessary to ensure compliance with the requirements for uncombined calcium hydroxide in Type II pipe when tested in accordance with the latest edition of ASTM C500, "Testing Asbestos-Cement Pipe."

Sec. 5.5 Test Records

The results of all tests shall be recorded and retained for one year, and shall be available to the purchaser at the place of manufacture.

Section 6—Marking and Delivery

Sec. 6.1 Marking

6.1.1 *Standard and random lengths.* Each standard or random length of pipe shall be clearly marked on the outside surface with the trade name, nominal inside diameter, class, type, hydrostatic test pressure, and date and shift of manufacture.

6.1.2 *Short lengths.* Each short length of pipe shall be clearly marked on the outside surface with the nominal inside diameter, class, type, and the letter "T" to indicate that it has been hydrostatically tested.

6.1.3 *Couplings.* All component parts of each coupling shall be clearly marked for use with the pipe for which they are intended. Each coupling sleeve shall also be marked with the letter "T" to indicate that it has been hydrostatically tested.

6.1.4 *Special markings.* If factory

inspection is made by the purchaser or his authorized inspector, then each pipe and each coupling sleeve shall receive an additional special marking of no more than three letters, as specified by the purchaser.

Sec. 6.2 Preparation for Shipment

All pipe and couplings, unless otherwise specified, shall be prepared for standard commercial shipment.

Appendix A

Dimensional Table of Fittings Ends Designed for Use With Asbestos–Cement Pressure Pipe

This appendix is for information only and is not a part of AWWA C400.

In the figures and tables on the following page, the dimensions shown are for fittings to be used with asbestos–cement pipe having the end dimensions in Table A1. Dimensions for fittings for use with other asbestos–cement pipe end machining will be included should such design be established.

Fitting tolerances, where indicated, are required of the fittings manufacturer to establish proper control.

Rubber gaskets to be purchased from the pipe manufacturer.

Fittings shall be made of such materials as will provide service compatible with asbestos–cement pipe.

TABLE A1

Pipe Size		Class 100						Class 150/200						All Classes			
in.	(*mm*)	*in.*	A (*mm*)	*in.*	B (*mm*)	*in.*	C (*mm*)	*in.*	A (*mm*)	*in.*	B (*mm*)	*in.*	C (*mm*)	*in.*	W (*mm*)	*in.*	N (*mm*)
4	(100)	5.36	(136)	4.93	(125)	4.74	(120)	5.53	(140)	5.10	(130)	4.91	(125)	0.95	(24)	3.50	(89)
6	(150)	7.63	(194)	7.20	(183)	7.01	(178)	7.63	(194)	7.20	(183)	7.01	(178)	0.95	(24)	3.50	(89)
8	(200)	9.83	(250)	9.40	(239)	9.21	(234)	9.83	(250)	9.40	(239)	9.21	(234)	0.95	(24)	3.50	(89)
10	(250)	11.96	(304)	11.53	(293)	11.34	(288)	12.38	(314)	11.95	(304)	11.76	(299)	0.95	(24)	3.50	(89)
12	(300)	14.16	(360)	13.73	(349)	13.54	(344)	14.64	(372)	14.21	(361)	14.02	(356)	0.95	(24)	4.00	(102)
14	(350)	15.93	(405)	15.37	(390)	15.17	(385)	17.08	(434)	16.52	(420)	16.32	(414)	1.00	(25)	4.50	(114)
16	(400)	18.01	(457)	17.45	(443)	17.25	(438)	19.32	(491)	18.76	(476)	18.56	(471)	1.00	(25)	4.50	(114)

Note: A, B & C tolerances are +.05 in. (1.27mm)
−.04 in. (1.02mm)

NOTE: All dimensions and tolerances are in inches, (millimetres).

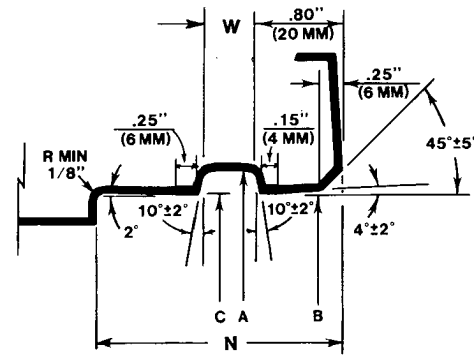

Pipe Size		Class 100				Class 150/200			
in.	(*mm*)	*in.*	D_2 (*mm*)	*in.*	D_3 (*mm*)	*in.*	D_2 (*mm*)	*in.*	D_3 (*mm*)
4	(100)	4.64	(118)	4.80	(122)	4.81	(122)	4.97	(126)
6	(150)	6.91	(176)	7.07	(180)	6.91	(176)	7.07	(180)
8	(200)	9.11	(231)	9.27	(236)	9.11	(231)	9.27	(235)
10	(250)	11.24	(286)	11.40	(290)	11.66	(296)	11.82	(300)
12	(300)	13.44	(341)	13.60	(345)	13.92	(354)	14.08	(358)
14	(350)	15.07	(383)	15.23	(387)	16.22	(412)	16.38	(416)
16	(400)	17.15	(436)	17.31	(440)	18.46	(469)	18.62	(473)

Note: Consult pipe manufacturer for pipe tolerances.

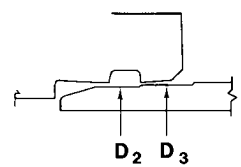

Department of Defense Acceptance Notice

This nongovernment document was adopted and approved for use by the Department of Defense (DoD) on 10 May 1982. The American Water Works Association has furnished the clearance required by existing regulations. Copies of the document are stocked by DoD Single Stock Point, Naval Publications and Forms Center, Philadelphia, PA 19120, for issue to DoD activities only. Contractors and industry groups must obtain copies from AWWA, 6666 West Quincy Ave., Denver, CO 80235.

Title of Document: AWWA Standard for Asbestos-Cement Distribution Pipe, 4 in. Through 16 in. (100 mm Through 400 mm) NPS, for Water and Other Liquids

Date of Specific Issue Adopted: June 15, 1974

Releasing Industry Group: American Water Works Association

Custodians: Army—ME
Navy—YD
Air Force—99

Military Coordinating Activity: Navy—YD

User Activity: Navy—MC

Project No. 5630-0088

FSC 5630

4P—7.5M—43400—8/81—LL