PLAINTIFF'S EXHIBIT

CHR-279

BUMGARDNER, HARDIN & ELLIS
A PROFESSIONAL CORPORATION
673 MORRIS AVENUE
SPRINGFIELD, N. J. 07081
(201) 564-6500
ATTORNEYS FOR Defendant
Chrysler Motors Corporation

SUPERIOR COURT OF NEW JERSEY
LAW DIVISION, MIDDLESEX COUNTY
DOCKET NO. L-085514-85

BRUCE RUSSO, et al., et al.	)	
Plaintiffs,	)	Civil Action
-vs-	)	ASBESTOS INTERROGATORIES
EAGLE PICHER INDUSTRIES, INC., et al.	)	
Defendants.	)	

PLAINTIFF'S EXHIBIT
NO. CH-60

D- Chrysler / Idaho

FORM B: DEFENDANT INTERROGATORIES: To be answered by all defendant and third party defendant miners, manufacturers, suppliers and installers of asbestos or asbestos containing products in all cases where Johns-Manville defendants will answer a separate set of interrogatories.

Instructions

Group A: Questions need not be answered unless defendant has raised a jurisdictional defense in its answers and intends to press said defense in accordance with R. 4:6-3.

Group B: Questions in this group are not limited in time or scope.

Group C: Questions in this group have time limits imposed concerning the scope of the information sought. The time reference is two years before plaintiff's earliest employment as alleged in the complaint up to the date of termination as alleged in the complaint. Where the complaint names more than one plaintiff the time reference is two years before the earliest date of employment by any plaintiff and the latest date of termination as to any such plaintiff.

Where reference is made in the question to plaintiff's employer, defendant is instructed to refer to the complaint for an identification of plaintiff's employer.

Answers to interrogatories in this form shall be provided and served within 120 days of the date of demand.

B1. State the name, address and job position of each and every individual signing these interrogatories on behalf of the defendant.

ANSWER: See Jurat Attached.

(a) State the name, address, employer and job position of each person whether defendant's employees or otherwise who were consulted with or who assisted in the answering of these interrogatories.

ANSWER: Robert Maples, Claims Supervisor, Chrysler Motors Corporation; James Knoll, Engineer, Chemical Division, Chrysler Motors Corporation; J.L. Koblin, Esq., Litigation and Insurance, Chrysler Motors Corporation, Highland Park, Michigan.

B2. Give a full and detailed description of the nature of the business that your company engaged in.

ANSWER: Chrysler Motors Corp. is engaged in the business of manufacturing automobiles and vans.

B3. When did your company commence its business?

ANSWER: Chrysler Motors Corporation began selling vehicles in 1925.

B4. (a) Are or have any of defendant's predecessors, affiliates, subsidiaries, or parent corporations engaged in the mining, sale and distribution of asbestos and/or asbestos fiber and/or asbestos containing insulation products? If so, state the name of each such entity, describe the nature of the involvement that each entity has or has had in the mining, distribution or sale of these products and materials and set forth the inclusive dates each was involved in each aspect of this business.

ANSWER: No.

(b) As to each such entity referred to in (a) above, state:

ANSWER: Not applicable.

(i) The relationship between defendant and each such entity;

(ii) The date each such relationship began and terminated;

(iii) The names and addresses of each such entity's corporate officers and Board of Directors;

(iv) The names and addresses of your corporate officers and Board of Directors.

B5. From the year 1925 until the present, identify and state the address of any organization in which defendant, its officers, agents or employees have belonged having anything to do with setting standards, regulations or the conducting of research into the use of asbestos, asbestos products or asbestos fiber.

ANSWER: The American Industrial Hygienist Association; The Friction Material Safety Institute; National Safety Counsel; Motor Vehicle Manufacturers Association.

B6. Has defendant ever been a member of or affiliated with any trade groups, professional associations or organizations? If so, identify each such group, association or organization and set forth the inclusive dates of defendant's membership in each.

ANSWER: See answer to number B5 above.

B7. Has defendant ever been a member of or affiliated with the Asbestos Textile Institute? If so, indicate when your company was affiliated or was a member of this organization.

ANSWER: No.

B8. Does your company publish or distribute a manual or booklet which describes the nature of the business that defendant is engaged in? If so, set forth the title of such manual or booklet, indicate when it was published and attach a copy of same hereto.

ANSWER: Chrysler Motors Corporation publishes owners manuals which are distributed with each vehicle.

B9. Has any employee or representative of your corporation ever attended a meeting of the Asbestos Textile Institute? If so, identify each such individual who attended these meetings and set forth the dates on which each such individual went to such a conference or meeting.

ANSWER: Not to our knowledge.

B10. Has your company ever been a member of, affiliated with or provided funding for the Industrial Hygiene Foundation? If so, indicate when your company was a member or affiliated with this organization and set forth the dates, if applicable, when you provided funding to this organization.

ANSWER: No.

B11. Does your company have a Board of Directors?

ANSWER: Yes.

B12. Does your company's Board of Directors conduct meetings?

ANSWER: Yes.

B13. Have minutes of the Board of Directors' meetings been taken and maintained by your company? If so, indicate who has custody of the minutes at this time.

ANSWER: Yes.

B14. Has your company and/or its subsidiaries or affiliates ever manufactured or distributed asbestos containing products?

ANSWER: Yes.

B15. Give a complete and detailed description of the particular qualities that asbestos has or had that caused your company and/or its subsidiary or affiliate to utilize asbestos in your products.

ANSWER: Chrysler Motors Corporation does not keep records as to the reason asbestos was utilized in its products.

B16. Did any of the entities from whom you received asbestos fiber or any of the entities referred to in B6, B7, B9 and B10 ever inform you or your company's employees that asbestos was potentially hazardous to the health of individuals who were exposed to it?

ANSWER: Asbestos related disease from certain raw asbestos fibers has been recognized for the past 20 years but Chrysler has no records of specific meetings or dates such information was received. Chrysler Motors Corporation has no information that brake dust to which plaintiff allegedly was exposed was potentially hazardous to the health.

B17. If so, for each such company that transmitted such information to you and your company, set forth the following information:

ANSWER: Chrysler Motors Corporation has no knowledge and maintains no records regarding what transpired at meetings regarding health hazards of asbestos from certain raw asbestos fibers.

(a) The name of each and every entity that informed your company that asbestos was potentially hazardous to health;

ANSWER: N/A

(b) The dates you received this information from each such company;

ANSWER: N/A

(c) Indicate how this information was transmitted to you;

ANSWER: N/A

(d) The substance of each warning;

ANSWER: N/A

(e) Annex hereto copies of each such warning.

ANSWER: None.

B18. Has defendant distributed or sold asbestos or asbestos containing products in the State of New Jersey? If so, set forth the following information:

ANSWER: Yes.

(a) The date that defendant commenced selling asbestos or asbestos containing products in the State of New Jersey;

ANSWER: Every Chrysler car contains asbestos in some form or other.

(b) The date the defendant terminated the sale of asbestos or asbestos containing products in the State of New Jersey;

ANSWER: Not applicable. Sale has not been terminated.

(c) The areas of New Jersey where asbestos or asbestos containing products were sold.

ANSWER: Brake linings account for most of these asbestos material since 1959.

B19. Did defendant ever affix any warnings to any of the asbestos or asbestos containing products it marketed and distributed? If so, for each such product that contained a warning set forth the following information:

ANSWER: Yes (subject to objections to admissibility at time of trial).

(a) The brand and tradename of each such product that contained a warning;

ANSWER: Brake linings, clutch facings, transmission bands, and heat resistant gaskets and seals.

(b) The date a warning was attached to each such product;

ANSWER: 1984 on the box and Service Manual.

(c) The substance of each warning;

ANSWER: See attached copy of the label.

(d) Annex hereto copies of each such warning.

ANSWER: See attached copy of the label.

B20. Set forth the name, address and job position of each and every individual who took part in your company's decision to place a warning on its asbestos or asbestos containing products.

ANSWER: J.L. Koblin, Esq., Litigation and Insurance Department made the recommendation for legal reasons.

B21. Prior to 1964, did any employee of the defendant ever recommend that it utilize a warning on its asbestos containing products? If so, identify each such employee, indicate when he made such a recommendation, indicate what the recommendation was, to whom it was given and what action was taken thereon.

ANSWER: Chrysler Motors Corporation has not retained any records to enable them to answer this question.

B22. Has defendant ever established or maintained a library or libraries which in any way dealt with industrial hygiene, medicine, safety and engineering? If so, state:

(a) Where the library was or is located;

ANSWER: Highland Park, Michigan

(b) The names of all journals which that library subscribed to;

ANSWER: Chrysler Motors Corporation does not have such a list to enable them to answer this question.

(c) For whom and for what purpose the library was established;

ANSWER: Industrial Hygiene Department.

(d) Whether there is an inventory of the books and publications which are or were housed in this library, and if so, attach a copy hereto.

ANSWER: None.

B23. Did defendant or its agents or employees ever make any effort to keep abreast of medical literature concerning potential health hazards posed by the use of and/or exposure to asbestos? Indicate the names, addresses and job positions of all your company's employees who reviewed this literature.

ANSWER: Yes. Chrysler Motors Corporation has not retained any records to enable them to answer this question.

B24. Prior to 1964 had your company done any studies or tests or had your company participated in, been the subject of or been aware of any studies or tests by others concerning the potential effects of inhalation of asbestos dust or fibers by one using or being exposed to asbestos or asbestos containing products. If so, state:

ANSWER: No, with respect to brake dust.

(a) The date each study or test was conducted and the date defendant became aware of said study or test;

ANSWER: N/A

(b) The names and addresses of the persons conducting each test or study;

ANSWER: N/A

(c) The purpose of the study or test;

ANSWER: N/A

(d) The results of each study or test;

ANSWER: N/A

(e) If reduced to writing attach a copy hereto.

ANSWER: N/A

B25. Prior to 1964, did defendant's agents or employees conduct any experiments with laboratory animals to determine whether or not its asbestos containing products were potentially hazardous to the health of workers who were using them? If so, for each such experiment which was conducted, indicate who conducted it, state when it was conducted and describe the results of each such experiment.

ANSWER: No.

B26. Since 1964 has your company done any studies or tests or has your company participated in, been the subject of, or been aware of any studies by others concerning the effects of inhalation of asbestos dust and fibers by one using or being exposed to asbestos or asbestos containing products? If so, state the following:

ANSWER: No, with respect to brake dust.

(a) The date each such study or test was conducted and the date defendant became aware of said study or test;

ANSWER: N/A

(b) The names and addresses of persons conducting the tests or studies;

ANSWER: N/A

(c) The purpose of the tests;

ANSWER: N/A

(d) The results of each test or study;

ANSWER: N/A

(e) Attach a copy of any reports based upon each study or test.

ANSWER: N/A

B27. Since 1964, has defendant or its agents or employees sponsored or performed any laboratory experiments with animals to determine whether or not its asbestos containing products were potentially hazardous to the health of workers who were using them? If so, state who conducted each study, indicate where each study was conducted and describe what the results of each test were.

ANSWER: No.

B28. Prior to 1964, did defendant or its agents or employees ever go out to construction sites, factories or power houses where its asbestos or asbestos containing products were being used to determine or measure the levels of asbestos dust or fibers in the work environment? If so, for each such study or experiment that was conducted, set forth the following information:

ANSWER: No.

(a) When and where each measurement, study or test was conducted;

(b) Who conducted each measurement, study or test;

(c) What types of equipment were utilized to measure the levels of asbestos dust or fibers in the air;

(d) What the results of each measurement, test or study were;

(e) Attach a copy of any reports concerning the measurements, tests or studies.

B29. Since 1964, has defendant and/or its agents or employees ever gone out to any construction sites, factories or power houses where its asbestos or asbestos containing products were being used to determine the levels of asbestos dust or fibers which were in the work environment? If so, for each such study or experiment which was conducted, set forth the following information:

ANSWER: No.

(a) Who conducted each measurement, study or test;

(b) When and where each measurement, study or test was conducted;

(c) What type of equipment was utilized to measure the levels of asbestos in the working environment;

(d) What the results of each study, measurement or test were;

(e) Attach a copy of any report concerning each measurement, study or test.

B30. Give a complete description of all programs implemented and precautions taken by the defendant at its plants and facilities where it manufactures asbestos or asbestos containing products to reduce the levels of asbestos dust and fibers in the air. Include in this description all programs implemented and precautions taken since each plant was in operation. Include in this answer the date that each precaution was taken or procedure was implemented.

ANSWER: Chrysler has done the following to reduce raw asbestos fiber exposure: Asbestos substitution, where possible and control facilities wherever possible, to or below the permissible exposure limit set by OSHA by means of ventilation, work practice control, wet methods, and respiratory protection programs, etc. Note: Answer given subject to objections to admissibility at time of trial.

B31. Did defendant at any time require its employees who worked in the manufacture of asbestos or asbestos containing products to wear respirators, face masks or other protective devices? If so, set forth which employee (by type) was required to wear such protective devices, when the directive relative to same was issued for each type of employee and specify what type of device was to be worn by each type of employee.

ANSWER: With respect to exposure to raw asbestos fibers, respirators, face masks and other protective devices were provided by Chrysler. With respect to brake dust, none.

B32. Give a complete explanation of why each and every employee set forth in the preceding answer was required to wear a respirator, face mask or other protective device while working with asbestos.

ANSWER: Generally, with respect to raw asbestos fibers of certain types and sizes, possible health hazard.

B33. Has any worker employed by your company, its subsidiaries or affiliates ever filed a worker's compensation claim against defendant or its predecessors, affiliates or subsidiaries, for an occupational disease or condition which was allegedly caused by exposure to asbestos, asbestos products, asbestos dust or fibers? If so, set forth:

ANSWER: None from alleged exposure to brake dust.

(a) The date each claim was made;

(b) Where each claim was made;

(c) The name and address of the party making the claim;

(d) The name and address of the party against whom the claim was made.

B34. If any employee or officer of defendant has testified at trial or by deposition in any litigation involving any alleged occupational exposure to asbestos, state:

ANSWER: None.

(a) Name, address and title of each such person who testified;

(b) Date, location and form of testimony;

(c) Whether defendant has a copy of such testimony.

B35. Has defendant at any time since its inception, maintained any office or department dealing with medical research? If so, state:

ANSWER: No.

(a) The name of each such department;

(b) The dates each such department was in operation;

(c) The name, address and job position of each such person who has been in charge of said department or departments.

B36. When was the first time the defendant became aware of or knowledgeable of any disease or illness associated with or causally related to the inhalation of asbestos, asbestos fibers or asbestos dust in any form whatsoever? Indicate which disease defendant became aware of and describe how defendant became aware of its alleged relationship to inhalation or exposure to asbestos.

ANSWER: In the 1930's Chrysler recognized that raw asbestos fiber inhalation in large quantities could cause or contribute to pulmonary disease.

B37. In reference to the preceding interrogatory, if defendant acknowledges a causal relationship between asbestos and disease or illness, set forth the following information:

ANSWER: Chrysler Motors Corporation does not acknowledge a causal relationship between exposure to brake dust and disease or illness.

(a) What diseases or illnesses defendant acknowledges are causally related to or associated with exposure to asbestos dust or fibers;

(b) The date upon which defendant became aware of the association with or causal relation to each such disease or illness;

(c) The date upon which defendant confirmed the causal relation of each such disease to exposure to asbestos dust or fibers;

(d) How defendant became aware of each such causal relationship or association, indicating the source of all such information.

B38. If your company manufactured any products which contained asbestos and which were commonly used by insulation workers and pipe coverers, describe how the following products were cut, shaped, mixed and applied when used:

ANSWER: Not applicable.

(a) Asbestos cement;

(b) Asbestos containing pipe covering;

(c) Asbestos sheeting;

(d) Asbestos insulation to cover extremes of heat as well as cold.

B39. Prior to 1964, were there any memoranda written by, distributed or circulated among defendant's employees, agents or representatives concerning the potential health hazards concerned with asbestos containing products? If so, state:

ANSWER: None to our knowledge concerning brake dust.

(a) Dates of each memorandum;

(b) Name, address and job position of each individual who wrote each memorandum;

(c) Name, address and job position of each individual to whom the memorandum was directed;

(d) Where each memorandum is kept;

(e) Attach copies of each memorandum hereto.

B40. Has defendant or its predecessor corporations ever had a division, affiliate or subsidiary which was involved in contracting for or installation of asbestos-containing materials in New Jersey? If so, for each such entity involved in the contracting or installation of these products, set forth the following information:

ANSWER: No.

(a) The Name of each such entity and the nature of its relationship to the parent corporation;

(b) The exclusive dates that each of the above mentioned entities were in existence.

B41. Did defendant ever provide any of the employees who worked in the contracting of or installation of asbestos containing materials with any respirators, face masks or protective clothing? If so, indicate what types of protective clothing, respirators or face masks were provided, describe when each type was first provided to each employee and describe why they were provided to each type of employee.

ANSWER: Not applicable.

B42. Has any individual who was ever employed in the contracting and insulation business referred to above ever filed a claim for workmen's compensation because of an alleged occupational disease sustained allegedly because of occupational exposure to asbestos? If so, for each such employee who has filed a claim, set forth the following information:

ANSWER: Not applicable.

(a) Name of each such employee;

(b) When each claim was filed;

(c) Where each claim was filed;

(d) Name of the attorney who represented the petitioner and respondent.

B43. State the full name, job title and present residences, business and professional addresses of any and all persons who have knowledge or any relevant facts relating to this case and the defense of your company.

ANSWER: All parties to this action; their agents, representatives and employees; all persons named in answers to Interrogatories; all persons named in depositions; all plaintiff's treating and/or consulting physicians; all custodians of records at any hospital which plaintiff may have received treatment; and all persons whose names are to be released in ongoing discovery. See answer to B1(a) above.

B44. State the name, address and credentials of each and every expert witness you intend to utilize at the time of trial and annex hereto a copy of their report.

ANSWER: Chrysler Motors Corporation relies on the same experts as General Motors and Ford. The names and expert reports will be supplied.

B45. Do you contend that the plaintiff's illness is a consequence of the negligence or the fault of a third party or anyone who is not a party to this action? If so, state the name and address of each such party and set forth all facts which support your contention.

ANSWER: This defendant contends that both plaintiffs alleged illinesses were caused by their cigarette smoking.

B46. Do you contend that the illness and/or death of the decedent in this action was not causally related to an occupational exposure to asbestos dust and fibers? If so, give a full and detailed description of your contentions.

ANSWER: The plaintiffs smoking.

B47. Do you contend that other agents and/or substances caused the illness and/or death of the plaintiff in this matter? If so, identify each such agent and/or substance and set forth all facts to support your contentions.

ANSWER: The plaintiffs smoking.

B48. Has defendant and/or its agents or employees obtained any statements from anyone who has knowledge of the facts surrounding this cause of action? If so, set forth:

ANSWER: None to date.

(a) The name, address and job position of the person that obtained the statement;

(b) The name, address and job position of the person who gave the statement;

(c) The date the statement was given;

(d) Whether the statement is in writing, and if so, who has custody of it.

B49. Does defendant contend that plaintiff or plaintiff's decedent suffered injuries and/or death due to his own negligence? If so, set forth all facts which support your contentions.

ANSWER: Yes. The plaintiffs smoking.

B50. Does defendant contend that plaintiff or plaintiff's decedent failed to use defendant's asbestos or asbestos containing products properly? If so, set forth all facts which support your contentions.

ANSWER: No such contention in this case to our knowledge at this time.

CAUTION

THIS PRODUCT CONTAINS ASBESTOS. AVOID CREATING DUST. BREATHING ASBESTOS MAY RESULT IN SERIOUS BODILY HARM.

DRUM BRAKES

INDEX

	Page		Pa
Brake Drum Removal	12	General Information	
Brake Shoe Removal	12	Installing Brake Supports	
Brake Drum Installation	15	Removing Brake Supports	
Brake Shoe Installation	14	Service Diagnosis	
Cleaning and Inspection	12	Special Tools	
Drum Refacing Recommendations	13		

GENERAL INFORMATION

All drum brake applications are two shoe, internal expanding brakes with application adjusters. The lower ends of the brake shoes are connected by a tubular star wheel adjusting screw (Figs. 1 and 2).

CAUTION: When servicing brake assemblies or components, do not create dust by sanding, grinding or by cleaning brake parts with a dry brush or with co pressed air. A water dampened cloth should be us Many brake components contain asbestos fibers wh can become airborne if dust is created during serv operations. Breathing dust which contains asbes fibers can cause serious bodily harm.

SERVICE PROCEDURES

BRAKE DRUM REMOVAL

(1) Remove rear plug from brake adjusting access hole.

(2) Insert a thin screwdriver into brake adjusting hole and hold adjusting lever away from notches of adjusting screw.

(3) Insert Tool C-3784 into brake adjusting hole and engage notches of brake adjusting screw. Release brake by prying down with adjusting tool.

(4) Remove rear wheel and clips from wheel studs that holds drum on axle. Discard clips. Remove drums.

(5) Inspect brake lining for wear, shoe alignment, or contamination from grease or brake fluid.

BRAKE SHOE REMOVAL

(1) Remove rear wheel, and drum retaining clips. Remove drum.

(2) Using Tool C-3785, remove brake shoe return springs (Fig. 3). (Note how secondary shoe return spring overlaps primary shoe return spring) (Figs 1 or 2).

(3) Slide eye of automatic adjuster cable off anchor and then unhook from adjusting lever. Remove cable, overload spring, cable guide and anchor plate.

(4) Disengage adjusting lever from spring by sliding forward to clear pivot, then working out from under spring. Remove spring from pivot. Remove shoe to shoe spring from secondary shoe web and disengage from primary shoe web. Remove spring.

(5) Disengage primary and secondary shoes and remove adjusting star wheel assembly from shoes.

(6) Remove brake shoe retainers, springs and nails using Tool C-4070, (Fig. 4), and remove from support.

(7) Remove parking brake lever from secon shoes. Remove shoes.

(8) Disengage parking brake lever from par brake cable.

CLEANING AND INSPECTION

Wipe or brush clean (dry) the metal portio

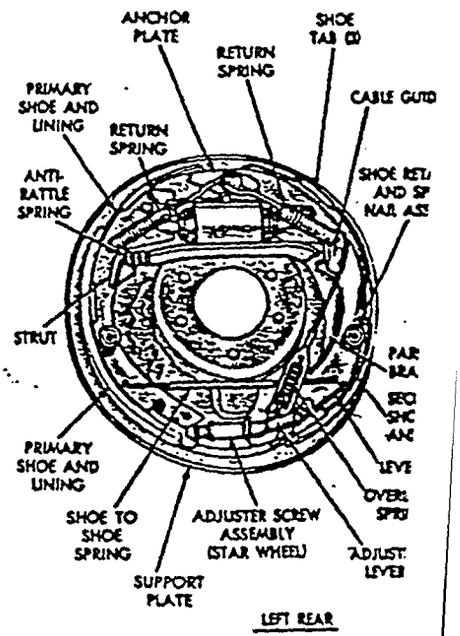

Fig. 1—Ten Inch Brake Assembly

1984 FRONT-WHEEL DRIVE SERVICE MANUAL

INDEX

	Page		Pa
Brake Drum Remove or Install	13	Drum Refacing	
Cleaning and Inspection	16	General Information	
Brake Shoe Installation	16	Service Diagnosis	
Brake Shoe Removal	14	Service Procedures	

GENERAL INFORMATION

Rear wheel brakes (Fig. 2) are two shoe, internal expanding type with automatic adjusting screw located directly under wheel cylinder.

CAUTION: When servicing brake assemblies or components, do not create dust by sanding, grinding or by cleaning brake parts with a dry brush or with compressed air. A WATER DAMPENED CLOTH SHOUI BE USED. Many brake components contain asbes fibers which can become airborne if dust is creat during service operations. Breathing dust which c tains asbestos fibers can cause serious bodily harm.

SERVICE PROCEDURES

BRAKE DRUM

Remove or Install

To allow easier drum removal, loosen up the parking brake cable by backing off the adjusting nut (Fig. 1). Further clearance can be obtained by backing off the brake automatic adjuster screw. Remove plug from the support plate and rotate starwheel with an upward motion, using a screwdriver or an adjuster Tool C-3784.

Remove grease cap (Fig. 2).

Remove cotter pin, lock nut, retaining nut and washer (Fig. 2).

Remove brake drum and bearings (Figs. 2 and 4).

Inspect brake linings for wear, shoe alignment and contamination.

For installation reverse procedure.

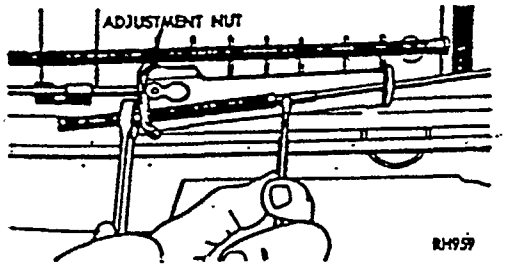

Fig. 1. Loosening Parking Brake Cable

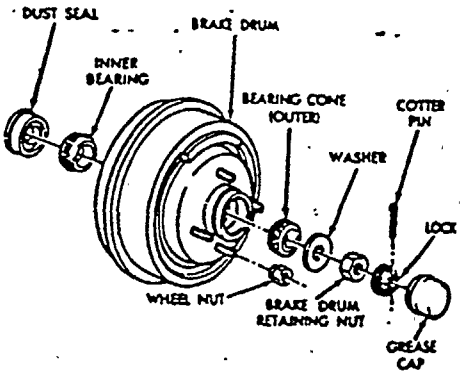

Fig. 2. Brake Drum and Hub Assembly

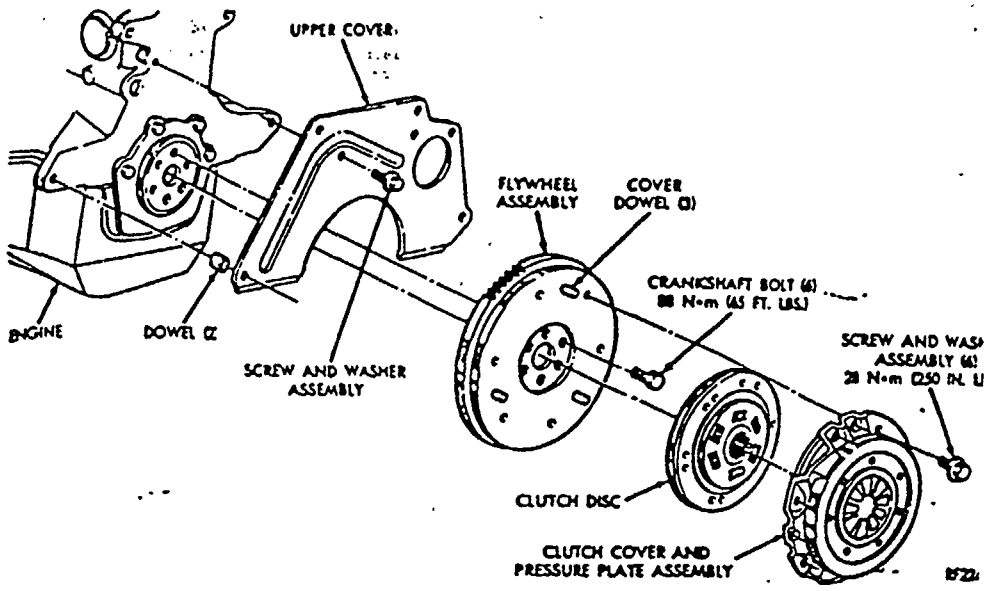

Fig. 3. A-460, A-465, and A-525 Manual Transaxle Clutch—Disassembled (2.2L Engine)

Removal and Installation

(1) Remove or install transaxle. See "Group 21, A-460, A-465, and A-525 Manual Transaxle," for procedure.

(2) Mark clutch cover and flywheel, to maintain their same relative positions when reinstalling clutch assembly.

(3) Insert clutch disc aligning tool C-4676 through the clutch disc hub to prevent the clutch disc from falling and damaging the facings (Fig. 4).

(4) Loosen or tighten clutch cover attaching bolts, one or two turns at a time, in succession, to avoid bending the cover flange (Fig. 2 or 3).

(5) Remove or install the clutch pressure plate and cover assembly and disc from flywheel. Handle carefully to avoid contaminating the friction surfaces.

(6) Remove or install clutch release shaft and slide release bearing assembly off the input shaft seal retainer.

(7) Remove or install the fork from the release bearing thrust plate (see "Release Bearing and Fork" section in Group 21).

(8) To reinstall, reverse the above procedure.

(9) Mount clutch assembly on flywheel, being careful to properly align dowels and the alignment marks made before removal. Apply pressure to the alignment tool to center the tip of the tool into the crankshaft and the sliding cone into the clutch fingers while snugging the clutch attaching bolts sufficiently to hold the disc in position.

(10) To avoid distortion of the clutch cover, t should be tightened a few turns at a time alterna until they are all seated. Tighten to 28 N·m (25C lbs.). Remove clutch disc alignment tool.

Cleaning and Inspection

CAUTION: When servicing clutch assemblies or

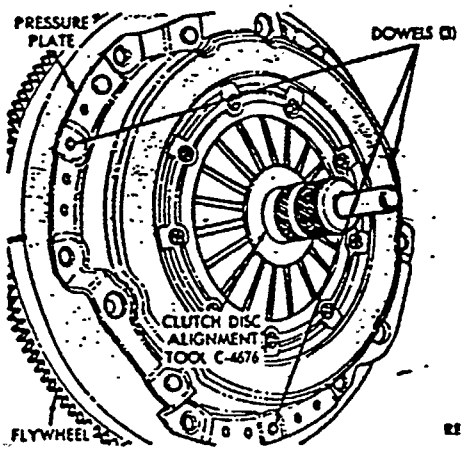

Fig. 4. A-460, A-465, and A-525 Manual Transa Clutch Disc Aligning Tool

ponents, do NOT create dust by sanding or by cleaning clutch parts with a dry brush or with compressed air. (A water dampened cloth should be used). The clutch disc contains "Asbestos Fibers" which can become airborne if dust is created during service operations. Breathing dust containing "Asbestos Fibers" may cause serious bodily harm.

(1) Inspect for oil leakage through engine rear main bearing oil seal and transaxle drive pinion seal. If leakage is noted, it should be corrected at this time.

(2) The friction faces of the pressure plate and flywheel should have a uniform appearance throughout the entire disc contact area. If there is evidence of heavy contact on one portion of the wear circle and very light contact 180 degrees from that portion, the flywheel and/or pressure plate may be improperly mounted or sprung. The flywheel should be checked with a dial indicator mounted on the engine with the plunger in contact with the wear circle. It should show no more than .003 inch runout for a complete rotation of the flywheel. Load the crankshaft forward to prevent including crankshaft endplay in runout measurement.

(3) The friction faces of the flywheel and pressure plate should also be free from excessive discoloration, burned areas, small cracks, deep grooves, or ridges.

(4) The disc assembly should be handled without touching the facings. Replace disc if the facings show evidence of grease or oil soakage, or wear to within less than .38 mm (.015 inch) of the rivet heads. The splines on the hub and transaxle shaft should be a snug fit without signs of excessive wear. Metallic portions of disc assembly should be dry and clean, and show no evidence of having been hot. Each of the arched springs between the facings should not be broken and all rivets should be tight.

(5) Wipe the friction surface of the pressure plate with a suitable solvent.

(6) Using a straightedge, check pressure plate for flatness. The pressure plate friction area should be flat within .020 inch and free from discoloration, burned areas, cracks, grooves, or ridges.

(7) Inner ends of the release levers should have a uniform wear pattern.

(8) Using a surface plate, test cover for flatness. All sections around attaching bolt holes should be in contact with surface plate within .015 inch.

(9) The cover should be a snug fit on flywheel dowels. If the clutch assembly does not meet these requirements, it should be replaced.

(10) Examine condition of clutch release bearing. It is a prelubricated and sealed angular contact bearing and should not be immersed in solvent.

The bearing should turn freely when held in the hand under light thrust load with no evidence of roughness.

(11) If the bearing is noisy, rough, or dr the complete bearing assembly with a new

RELEASE BEARING AND FORK (Removed from Transaxle)

Removal and Installation

(1) Remove the clutch release shaft and the fork and bearing assembly off the bearir

(2) Remove the fork from the bearing th

(3) Examine the condition of the bearing lubricated and sealed and should not be im solvent.

(4) The bearing should turn smoothly wh the hand under a light thrust load. A light dr by the lubricant fill is normal. If the bearin rough, or dry, replace the complete bearing with a new bearing.

(5) The plastic liner is prelubricated at If the grease is contaminated, wipe out the and fill the cavities and coat the inner surf liner with multipurpose grease. If the liner or shows signs of heavy wear, replace th assembly.

(6) Check the condition of the spring cl clips are loose or distorted replace the b sembly.

(7) Before assembling the fork, lubricate ed thrust pads and the spring clip cavities purpose grease.

(8) Assemble the fork to the bearing by thrust pads under the spring clips. Be caref distorting the spring clips. These clips p bearing thrust plate from rotating with the

(9) Slide the bearing and fork assembl bearing pilot.

(10) Position the release shaft bushin housing and install the release shaft. Inst tainer clip in the shaft groove near the larg

(11) Install the release lever and retaini the outer end of the release shaft.

CLEANING PRECAUTIONS

Condensation from steam vapors tend late on the internal clutch mechanism wh hicle is steam cleaned. The facing of th absorb moisture, and the force exerted b sure plate will bond the facings to flywh pressure plate, if vehicle is allowed to stan time before use. If this condition occurs, it sitate replacement of disc assembly, flywh clutch asembly. Immediately after cleaning start engine and drive vehicle to normal o ating temperature in order to dry off disc pressure plate, and flywheel.

STATE OF MICHIGAN)
) ss
COUNTY OF WAYNE)

ROBERT D. MAPLES, being first duly sworn on oath, deposes and says that he is Claims Supervisor of Chrysler Motors Corporation (formerly known as Chrysler Corporation); that he has read the foregoing Answers to Interrogatories to Defendant, Chrysler Corporation, and subscribes to the same on behalf of Chrysler Motors Corporation; that the foregoing Answers to Interrogatories are based on information communicated to him by Chrysler Motors Corporation personnel and other persons and information obtained from books and records of Chrysler Motors Corporation, and he believes the foregoing answers to be true and correct.

CHRYSLER MOTORS CORPORATION

Robert D Maples

ROBERT D. MAPLES, CLAIMS SUPERVISOR

Subscribed and sworn to before me
this 29th day of January, 1987

Geraldine A. Mieszwa
NOTARY PUBLIC