CONOCO

Interoffice Communication

To Distribution

From W. R. Finch

Date July 11, 1980

Subject Budget Designs--PVC Plants

Attached are three designs prepared for the Oklahoma City and Aberdeen Plant 1981 budgets. They are:

1. Reactor Level Alarms.

2. Reactor Relief Containment--Blowdown Drum.

3. Reactor Relief Containment--Memo Item.

These designs were preissued in rough draft form to allow for estimating.

Walter R. Finch

Walter R. Finch
Senior Process Engineer
Chemicals Division
Process Engineering Department

ke
Enc
CC:
JHM:REB:RDM:RAF(3):JPW(3)
JF:CLM:AWS:CRM:DJR
PVC Group

File P-47.1
P-47.2

REACTOR LEVEL ALARMS

VAB.0001099987

Interoffice Communication

To R. E. Barker

From W. R. Finch

Date July 3, 1980

Subject Budget Estimate for Reactor Level Alarms--Oklahoma City and Aberdeen PVC Plants

Attached is a budget design by Mike Hurtz for installation of level alarms on the PVC reactors at Oklahoma City and Aberdeen. The design involves addition of high and low level alarms at Oklahoma City and addition of low level alarms at Aberdeen.

Would you please prepare a budget-type estimate for both plants.

Walter R. Finch
Senior Process Engineer
Chemicals Division
Process Engineering Department

lkm
Enc
CC:
JHM:REB:RDM:JPW:RAF

File A-20.1
File A-21.1

BUDGET DESIGN
REACTOR LEVEL ALARMS
OKLAHOMA CITY AND ABERDEEN PVC PLANTS

July 3, 1980

Michael J. Hurtz

Work by: Michael J. Hurtz
Process Engineer
Chemicals Division
Process Engineering Department

PROCESS DESCRIPTION

REACTOR LEVEL ALARMS

OKLAHOMA CITY AND ABERDEEN PVC PLANTS

The purpose of this design is to provide reactor level alarms to reduce the probability of liquid full reactors, thereby reducing the potential for atmospheric VCM release. This design requires the installation of high level and low level alarms on all Oklahoma City reactors and installation of low level alarms on all Aberdeen reactors. The level detectors recommended are radiofrequency probes.

A budget class design is requested for both plants.

MJH-lkm
7/3/80

INSTRUMENT LIST

REACTOR LEVEL ALARMS

OKLAHOMA CITY AND ABERDEEN PVC PLANTS

Item No.	Description	Plant
LAH-1	Reactor High Level Alarm	Oklahoma City
LAH-2	Reactor High Level Alarm	Oklahoma City
LAH-3	Reactor High Level Alarm	Oklahoma City
LAH-4	Reactor High Level Alarm	Oklahoma City
LAH-5	Reactor High Level Alarm	Oklahoma City
LAH-6	Reactor High Level Alarm	Oklahoma City
LAL-1	Reactor Low Level Alarm	Oklahoma City
LAL-2	Reactor Low Level Alarm	Oklahoma City
LAL-3	Reactor Low Level Alarm	Oklahoma City
LAL-4	Reactor Low Level Alarm	Oklahoma City
LAL-5	Reactor Low Level Alarm	Oklahoma City
LAL-6	Reactor Low Level Alarm	Oklahoma City
LAL-7	Reactor Low Level Alarm	Aberdeen
LAL-8	Reactor Low Level Alarm	Aberdeen
LAL-9	Reactor Low Level Alarm	Aberdeen
LAL-10	Reactor Low Level Alarm	Aberdeen
LAL-11	Reactor Low Level Alarm	Aberdeen
LAL-12	Reactor Low Level Alarm	Aberdeen
LAL-13	Reactor Low Level Alarm	Aberdeen
LAL-14	Reactor Low Level Alarm	Aberdeen
LAL-15	Reactor Low Level Alarm	Aberdeen
LAL-16	Reactor Low Level Alarm	Aberdeen

MJH-lkm
7/3/80

ENGINEERING CENTER

PONCA CITY, OKLAHOMA

SPECIFICATION SHEET

LIQUID LEVEL INSTRUMENTS

A.F.E. NO. _____
DATE 6-17-80 W. O. NO. _____
MADE BY MJH INQ. NO. _____
APP'D BY WRF REQ. NO. _____
B. M. NO. _____ P. O. NO. _____

PLANT OKC / ABD PVC PROJECT: LIQUID LEVEL ALARMS

1	TAG NO.	LAH-1 THROUGH -6	LAL-1 THROUGH -6	LAL-7 THROUGH -16	
2	SERVICE	REACTOR HIGH LEVEL	REACTOR LOW LEVEL	REACTOR LOW LEVEL	
3		ALARM (1)(7)	ALARM (1)(8)	ALARM (6) (8)	
4	INSTRUMENT, TYPE	HIGH LEVEL ALARM	LOW LEVEL ALARM	LOW LEVEL ALARM	
5	LOCATION	BOARD (2)	BOARD (2)	BOARD (2)	
6	ELEMENT, TYPE	RADIOFREQUENCY PROBE (3)	RADIOFREQUENCY PROBE (3)	RADIOFREQUENCY PROBE (3)	
7	LOCATION	TOP OF REACTOR	BOTTOM OF REACTOR	BOTTOM OF REACTOR	
8	RANGE, INCHES	18" (4)	8" (5)	8" (5)	
9	INTERFACE				
10	UPPER DENSITY, LB./CU. FT.				
11	LOWER DENSITY, LB./CU. FT.				
12	TEMPERATURE °F				
13	PRESSURE PSIG				
14	VALVE TYPE				
15					
16	LOCATION				
17	MATERIAL				
18	BODY SIZE / PORT SIZE				
19	PLUG FORM				
20	ΔP / MIN. / NOR. / MAX.				
21	CALC. Cv / VALVE Cv				
22	AIR TO OPEN OR CLOSE				
23	MAXIMUM SHUTOFF ΔP				
24	FLUID				
25	TEMPERATURE °F				
26	PRESSURE PSIG				
27	°API (M.W.)				
28	SP. GR. AT STD. COND.				
29	SP. GR. AT P. & T.				
30	WEIGHT % VAPOR IN–OUT				
31	VISCOSITY AT P. & T.				
32	RATE, NORMAL				
33	RATE:				
34	MAX. / MIN.				
35	NOTES:				

(1.) FOR OKLAHOMA CITY PLANT (SIX REQUIRED)

(2.) ALL SIGNALS TO THE BOARD ARE ELECTRONIC.

(3.) PROBE TO BE DREXELBROOK MODEL 506-1000-6 RADIOFREQUENCY PROBE OR COMPANY APPROVED EQUIVALENT. PROBE TO BE INTRINSICALLY SAFE. ELECTRONICS HOUSING TO BE EXPLOSION PROOF, MEETING CLASS I, DIVISION I, GROUP D SPECIFICATIONS. SENSING ELEMENT TO BE ½" O.D. S.S. UNIT TO BE EQUIPPED WITH REQUIRED DIAMETER 300# 316 S.S. FLANGES.

(4.) SENSING ELEMENT TO BE 18". COTE SHIELD TO BE 10."

(5.) SENSING ELEMENT TO BE 8". COTE SHIELD TO BE 4".

(6.) FOR ABERDEEN PLANT (TEN REQUIRED).

(7.) ALARM TO SOUND DURING POLYMERIZATION AND CHARGE CYCLES ONLY. TO BE EQUIPPED WITH ADJUSTABLE TIME DELAY.

(8.) ALARM TO SOUND DURING EVACUATION CYCLE ONLY. EACH REACTOR TO HAVE BOARD MOUNTED LIGHT TO INDICATE LEVEL/NO LEVEL CONDITION.

7/3/80

SHEET _____ OF _____ REV.

VAB.0001099992

WORK LIST

REACTOR LEVEL ALARMS

OKLAHOMA CITY AND ABERDEEN PVC PLANTS

1. Oklahoma City - Install low level alarms to D-305 and D-306 through existing spare nozzles. D-301, D-302, D-303, and D-304 require field installation of new six-inch, pad-mounted, 300-pound nozzles. The nozzles are to be electropolished 316 stainless steel.

   Aberdeen - D-300 requires field installation of a new six-inch, pad-mounted, 300-pound nozzle. The nozzle is to be electropolished 316 stainless steel. Install low level alarms through existing spare pad-mounted nozzles on the other nine reactors.

2. Oklahoma City - Install high level alarms to the existing spare six-inch nozzles.

   Aberdeen - None required.

MJH-lkm
7/3/80

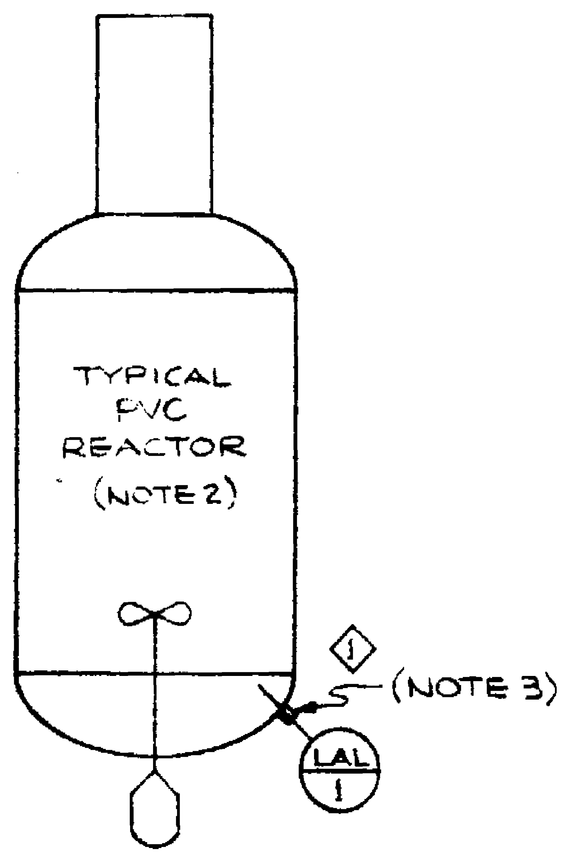

Notes:
1. Details of existing reactors not shown.
2. Typical for ten reactors.
3. New six-inch, pad-mounted nozzle to be installed on D-300. Other reactors are to use the existing spare nozzles.

◇ DENOTES WORKLIST ITEMS

CONTINENTAL OIL COMPANY
ENGINEERING CENTER
PONCA CITY, OKLAHOMA

REACTOR LOW LEVEL ALARMS
ABERDEEN PVC PLANT

APPD: WRF
DATE: 7/7/80

No. 80-2828-45-1-B

AB.0001099994

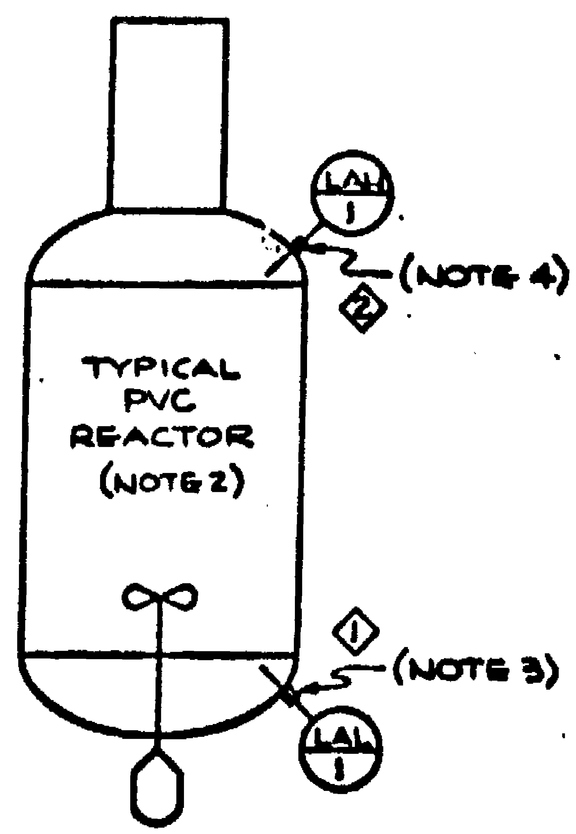

Notes:
1. Details of existing reactors not shown.
2. Tpical for six reactors.
3. New six-inch, pad-mounted nozzles to be installed on D-301, D-302, D-303, and D-304. Other reactors are to use the existing spare nozzles.
4. Use spare six-inch nozzles.

◇ DENOTES WORKLIST ITEMS

CONTINENTAL OIL COMPANY
ENGINEERING CENTER
PONCA CITY, OKLAHOMA

REACTOR LEVEL ALARMS
OKC PVC PLANT

APPD: [illegible]
DATE: 7/1/[illegible]

No. SD-2823-45-4-[illegible]

VAB.00010995

REACTOR RELIEF CONTAINMENT
MEMO ITEM

VAB.0001099996

conoco

Interoffice Communication

To R. E. Barker

From W. R. Finch

Date July 11, 1980

Subject Budget Estimate for Reactor Relief Containment--Memo Item--Oklahoma City PVC Plant

Attached is a preliminary design by Mike Hurtz for a reactor relief blowdown system for the Oklahoma City PVC Plant. The design involves installation of a pressure vessel, centrifugal pump, turbine-type agitators, and associated piping as outlined in the design.

Please prepare an estimate to be used for the upcoming budget.

Walter R. Finch

Walter R. Finch
Senior Process Engineer
Chemicals Division
Process Engineering Department

lkm
Enc
CC:
JHM:REB:RDM:JPW

VAB.0001099997

PRELIMINARY PROCESS DESIGN
REACTOR RELIEF CONTAINMENT--MEMO ITEM
OKLAHOMA CITY PVC PLANT

July 11, 1980

Michael J. Hurtz

Work by: Michael J. Hurtz
Process Engineer
Chemicals Division
Process Engineering Department

VAB.0001099998

PROCESS DESCRIPTION

REACTOR RELIEF CONTAINMENT--MEMO ITEM

OKLAHOMA CITY PVC PLANT

The purpose of this design is to provide a partial reactor relief containment system for the Oklahoma City PVC reactors. This is a very preliminary design requiring an order-of-magnitude estimate to be used for a budget memo item.

The design calls for addition of one rupture disc/relief valve assembly on each reactor, one on-off valve on each reactor to be used as a manual vent, one blowdown tank sized at 100,000 gallons, and a blowdown tank slurry pump. The manual vent and relief valve assembly will be piped to the blowdown tank. The existing reactor relief valves will remain vented to the atmosphere. Manual venting at 160 psig and relief valve/rupture disc set point of 175 psig are recommended. The slurry blown to the blowdown tank will be mixed with AMS. Once blowdown is complete, the slurry will be pumped back to a reactor for VCM recovery.

The proposed system is sized for relief from one reactor. Very preliminary calculations indicate the system will provide an additional ten minutes more than the existing system for AMS injection into the reactors in the event of an emergency AMS injection failure before an atmospheric VCM release will occur. Without manual venting, approximately five minutes additional time will be realized.

MJH:lkm
7/11/80

BASIS

REACTOR RELIEF CONTAINMENT--MEMO ITEM

OKLAHOMA CITY PVC PLANT

1. A reactor charge of 51,000 pounds of VCM and a water-to-monomer ratio of 1.2 are assumed.

2. The blowdown system is sized for one reactor vent only.

3. The system will provide an additional ten minutes for emergency AMS injection.

4. The manual vent will begin relieving at 160 psig. The rupture disc/ relief valve assembly relieves at 175 psig. The relief valve has a T orifice. Atmospheric VCM release occurs at 195 psig.

5. A worst case situation of 5 percent conversion is assumed.

MJH:lkm
7/11/80

EQUIPMENT LIST

REACTOR RELIEF CONTAINMENT--MEMO ITEM

OKLAHOMA CITY PVC PLANT

Item No.	Service
NA-100	Blowdown Slurry Agitator
NA-101	Blowdown Slurry Agitator
NF-100	Blowdown Drum
NF-101	AMS Injection Pot
NG-100	Blowdown Slurry Pump

MJH:lkm
7/11/80

EQUIPMENT SUMMARY

REACTOR RELIEF CONTAINMENT--MEMO ITEM

OKLAHOMA CITY PVC PLANT

NA-100 and NA-101 Blowdown Slurry Agitators (Two Required)

Use Lightnin Model 85S20 (or Conoco Approved Equivalent)
20 Horsepower Motor
Approximate Cost = $30,000 Each

NF-100 Blowdown Drum

Design Conditions	
Pressure, psig	0-200
Maximum Temp, °F	180
Diameter, Feet	20
Length (T-T), Feet	40
Material of Construction	Carbon Steel with Baked Phenolic Internal Lining

NF-101 AMS Injection Pot

Design Conditions	
Pressure, psig	0-400
Maximum Temp, °F	750
Diameter, Feet	2
Length, Feet	3
Material of Construction	304 SS

NG-100 Blowdown Slurry Pump

Type	Centrifugal with Open Impeller
GPM	150
ΔP	30 psi

MJH:lkm
7/11/80

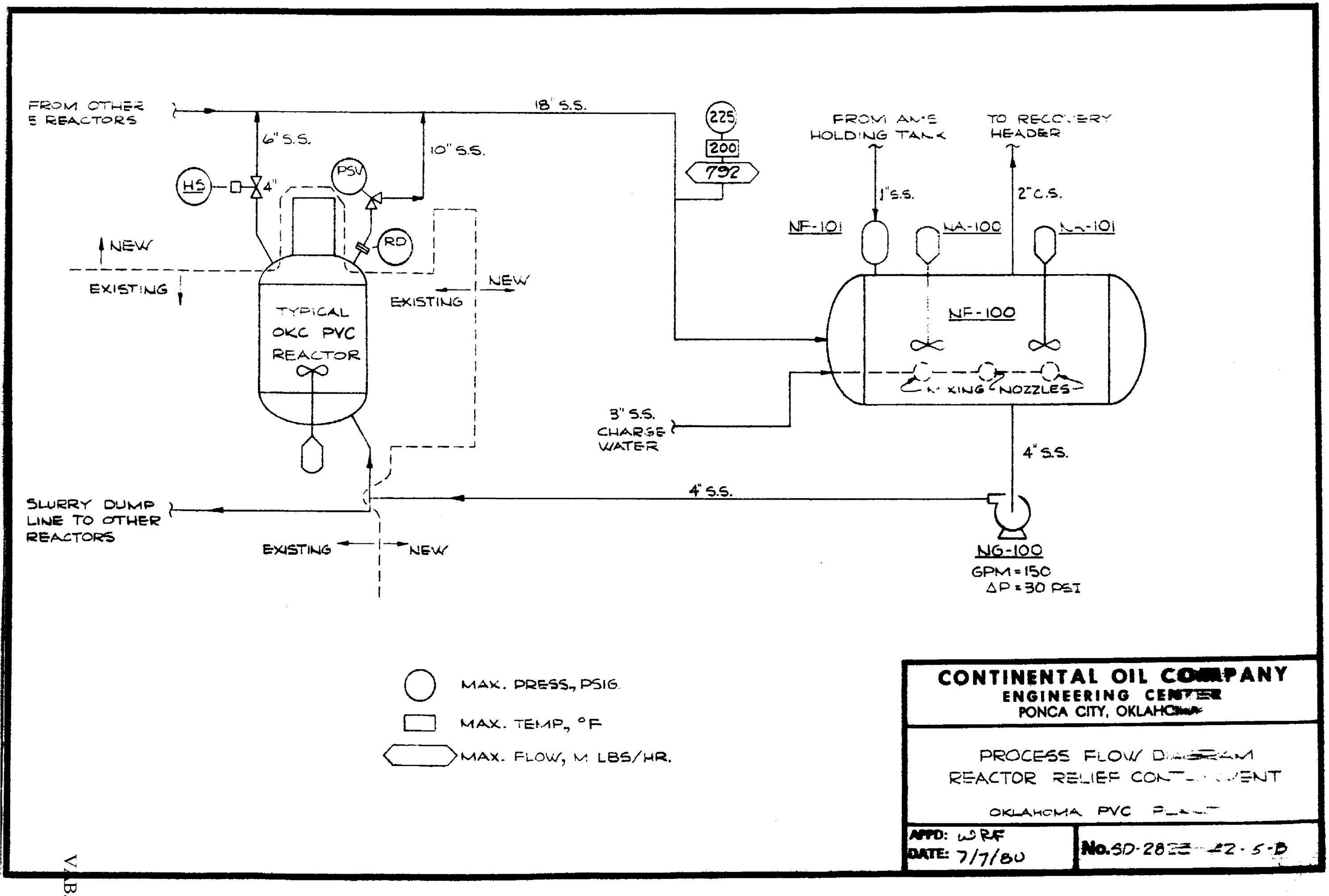

CONTINENTAL OIL COMPANY
ENGINEERING CENTER
PONCA CITY, OKLAHOMA

PROCESS FLOW DIAGRAM
REACTOR RELIEF CONTAINMENT

OKLAHOMA PVC PLANT

APPD: WRF
DATE: 7/7/80

No. SD-28[illegible]-42-5-B

VAB.0001100003

REACTOR RELIEF CONTAINMENT
BLOWDOWN DRUM

VAB.0001100004

conoco

Interoffice Communication

To R. E. Barker

From W. R. Finch

Date July 11, 1980

Subject Budget Estimate for Reactor Relief Containment--Blowdown Drum--Oklahoma City and Aberdeen PVC Plants

Attached is a budget design by Mike Hurtz for a blowdown drum installation at Oklahoma City. The design involves three alternates:

Alternate 1 - Use a blowdown drum size of 18,000 gallons.

Alternate 2 - Use a blowdown drum size of 30,000 gallons.

Alternate 3 - This design will also be used for budgeting an installation at Aberdeen. Use two 30,000-gallon blowdown drums, one for each module. Please include the appropriate difference in labor cost and pipe cost, if any.

Would you please prepare a budget-type estimate for these three alternates.

W R Finch

W. R. Finch
Senior Process Engineer
Chemicals Division
Process Engineering Department

lkm
Enc
CC:
JHM:REB:RDM:JPW:RAF

BUDGET DESIGN
REACTOR RELIEF CONTAINMENT--BLOWDOWN DRUM
OKLAHOMA CITY AND ABERDEEN PVC PLANTS

July 11, 1980

Michael J Hurtz

Work by: Michael J. Hurtz
Process Engineer
Chemicals Division
Process Engineering Department

TABLE OF CONTENTS

BUDGET DESIGN

REACTOR RELIEF CONTAINMENT--BLOWDOWN DRUM

OKLAHOMA CITY AND ABERDEEN PVC PLANTS

	Page No.
PROCESS DESCRIPTION	1
EQUIPMENT LIST	2
EQUIPMENT SPECIFICATIONS	3
INSTRUMENT LIST	7
INSTRUMENT SPECIFICATIONS	9
PIPING SCHEDULE	24
WORK LIST	27
DRAWINGS	

PROCESS DESCRIPTION

REACTOR RELIEF CONTAINMENT--BLOWDOWN DRUM

OKLAHOMA CITY AND ABERDEEN PVC PLANTS

The purpose of this design is to provide a partial containment system that will eliminate VCM release if a reactor becomes liquid full. The design requires installation of a blowdown drum (pressure vessel). The blowdown drum will be connected to the existing reactor charge water header to allow dumping of the reactors into the blowdown drum. The slurry will be pumped from the blowdown drum back into one of the reactors through the existing dump header for steam stripping. The blowdown drum is to be a carbon steel vessel lined with a baked phenolic resin.

This design is based on the Oklahoma City PVC Plant. Two alternates are considered for Oklahoma City. Alternate A assumes a blowdown drum size of 18,000 gallons. Alternate B assumes a blowdown drum size of 30,000 gallons. This design will also be used for budget estimating at the Aberdeen PVC Plant. Aberdeen requires two 30,000-gallon blowdown drums (one for each module).

MJH:lkm
7/11/80

EQUIPMENT LIST

REACTOR RELIEF CONTAINMENT--BLOWDOWN DRUM

OKLAHOMA CITY PVC PLANT

Item No.	Service
NF-1	Blowdown Drum
NF-2	AMS Injection Pot
NA-1 and NA-2	Blowdown Drum Agitators
NG-1	Blowdown Drum Slurry Pump
-	Blowdown Drum Spray Nozzle

MJH:LKM
7/11/80

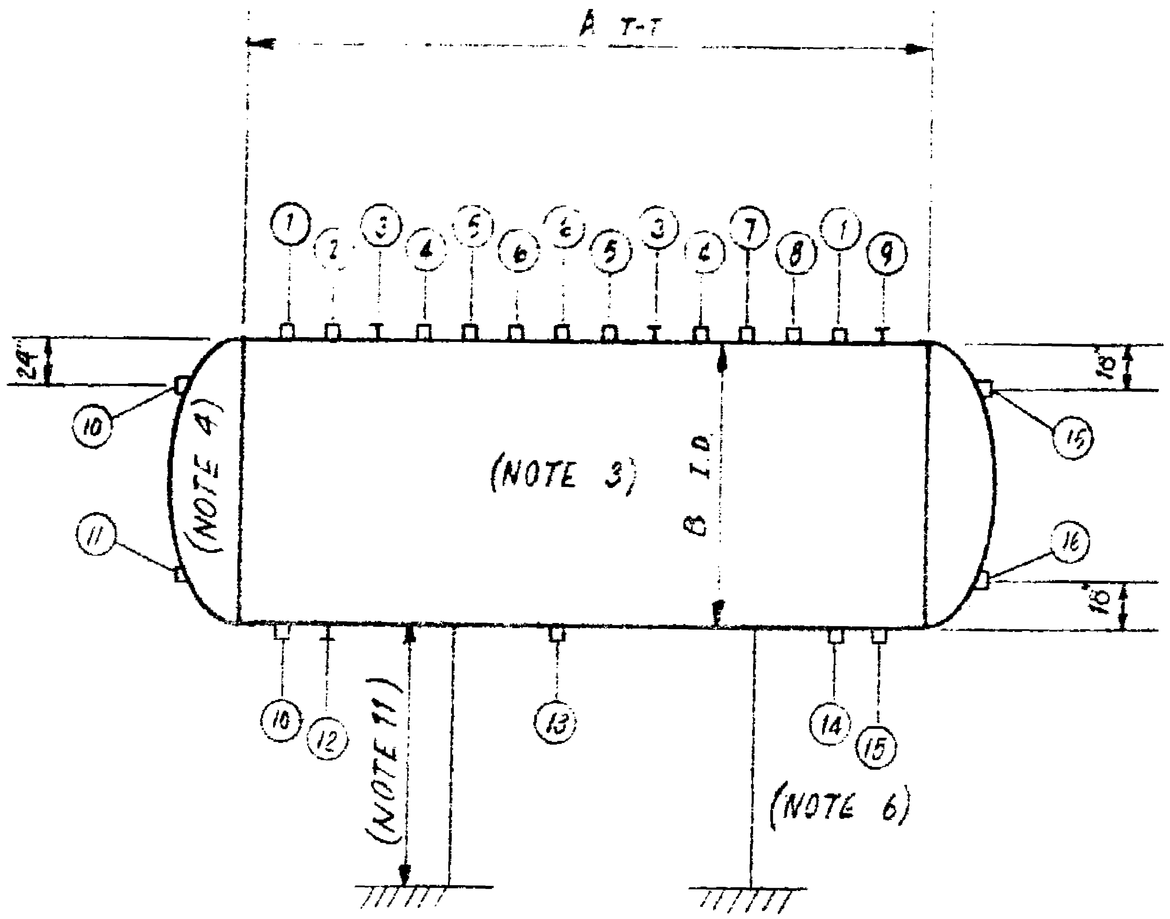

DIMENSIONS:

	18,000 GALLON	30,000 GALLON
A	22 Ft.	26 Ft.
B	11 Ft.	13 Ft.

NOZZLE SCHEDULE

MARK NO.	NO. REQ.	SIZE	TYPE	SERVICE
1	2	8"	PAD	RELIEF VALVE
2	1	8"	PAD	SPARE
3	2	8"	FLG	SPRAY NOZZLE
4	[illegible]	(10)	PAD	AGITATOR
5	2	8"	PAD	RELIEF VALVE (1)
6	2	2"	PAD	AMS INJECTION
7	1	2"	PAD	RECOVERY
8	1	18"	PAD	MANWAY (2)
9	1	1½"	FLG	PRESSURE GAUGE
10	2	2"	PAD	LEVEL PROBES
11	1	3"	PAD	PUMP CIRCULATION
12	1	8"	FLG.	STEAM HOSE CONNECTION
13	1	6"	PAD	SPARE
14	1	6"	PAD	OUTLET
15	2	4"	PAD	LEVEL INSTRUMENT
16	1	10"	PAD	INLET
17				
18				
19				
20				

ISU	DATE	DESCRIPTION	BY	CKD	APD
			KB	MJH	WR4

DESIGN DATA

OPERATING TEMPERATURE, °F	165
DESIGN TEMPERATURE, °F	225 (8)
OPERATING PRESSURE, PSIG	0-160
DESIGN PRESSURE, PSIG	275 (9)
INSULATION: (7)	
FIRE	( )
HEAT CONSERVATION	( )
NONE	( )
CORROSION ALLOWANCE	1/16"
MATERIAL OF CONSTRUCTION	CS (3)

NOTES

(1) FOR 30,000 GALLON ONLY
(2) MANWAY IS LENAPE 300 POUND, TYPE B QUICK OPENING W/VITON RING PAD MOUNTED
(3) VESSEL TO HAVE BAKED PHENOLIC INNER LINING. MAX. OPERATING TEMP. IS 180°F FOR EXTENDED PERIODS.
(4) VESSEL HEADS ARE 2:1 ELIPTICAL
(5) ALL VESSEL NOZZLES TO BE FLUSH ON INSIDE OF VESSEL.
(6) VESSEL TO BE SLOPED TOWARD OUTLET AT ¼" PER FOOT.
(7) VESSEL TO HAVE OFF-SET STEAM TRACING WITH INSULATION
(8) 225°F @ 15 PSIG.
(9) 275 PSIG @ 200°F
(10) 12" FOR 18,000 GALLON VESSEL
14" FOR 30,000 GALLON VESSEL
(11) TANK MUST BE LOWER THAN REACTORS TO ALLOW GRAVITY DRAIN. TANK PIT MIGHT BE REQUIRED

CONTINENTAL OIL COMPANY
ENGINEERING CENTER
PONCA CITY, OKLAHOMA

NF-1
BLOWDOWN DRUM
REACTOR RELIEF CONTAINMENT
OKLAHOMA CITY PVC PLANT

APPD: WR4
DATE: 7/7/80

No. SD-2823-45-1-B

VAB.0001100010

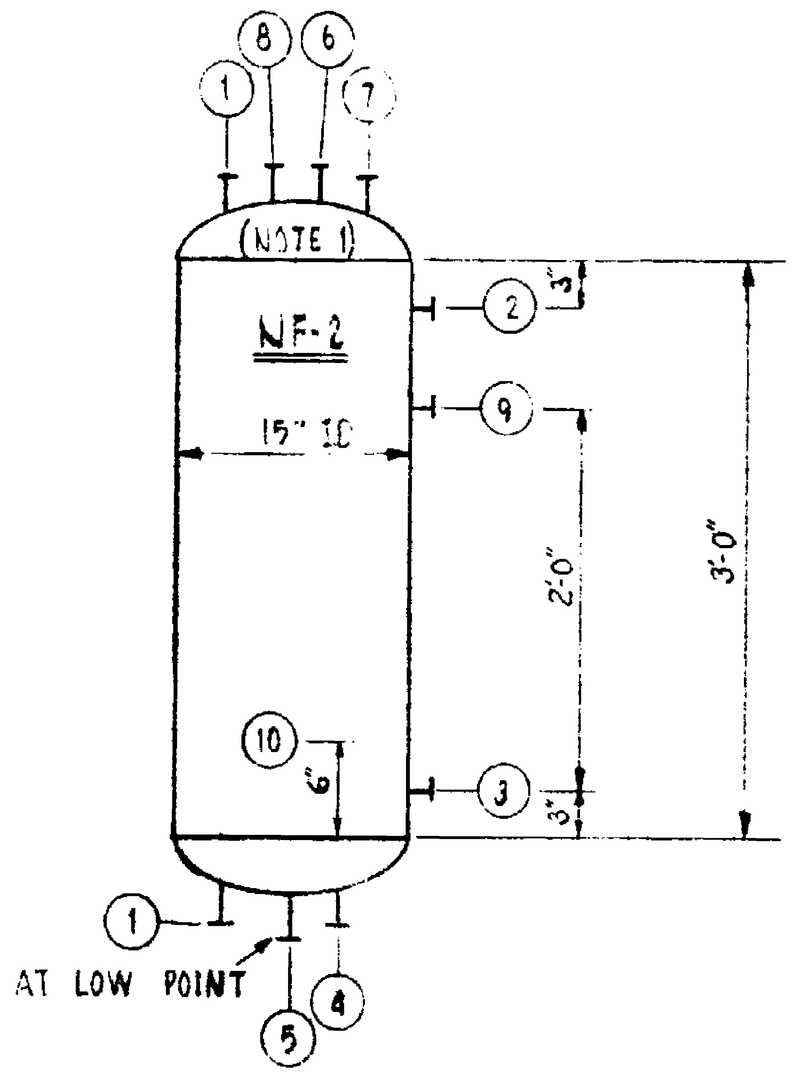

NOZZLE SCHEDULE

MARK NO.	NO. REQ.	SIZE	TYPE	SERVICE
1	2	1½"	FLG.	LEVEL GAUGE
2	1	1½"	FLG.	AMS INLET
3	1	3"	FLG.	LEVEL SWITCH
4	1	1½"	FLG.	AMS OUTLET (AUTO)
5	1	1½"	FLG.	AMS OUTLET (MANUAL)
6	1	1½"	FLG.	NITROGEN INLET
7	1	1½"	FLG.	SAFETY VALVE
8	1	1½"	FLG.	PRESSURE GAUGE & ALARM
9	1	2"	FLG	SPARE
10	1	8"	PAD	HANDHOLE INSPECTION (W/BLIND)
11				
12				
13				
14				
15				
16				
17				
18				
19				
20				

ISU	DATE	DESCRIPTION	BY	CKD	APD
			ALB	MJH	WRT

DESIGN DATA

OPERATING TEMPERATURE, °F	AMBIENT
DESIGN TEMPERATURE, °F	AMBIENT (2)
OPERATING PRESSURE, PSIG	300
DESIGN PRESSURE, PSIG	400 (2)
INSULATION:	
FIRE	( )
HEAT CONSERVATION	( )
NONE	(X)
CORROSION ALLOWANCE	1/16"
MATERIAL OF CONSTRUCTION	CS

NOTES

(1) VESSEL HEADS ARE 2:1 ELLIPTICAL

(2) VESSEL RELIEF IS FOR FIRE CONDITIONS: 400 PSIG @ 725°F

CONTINENTAL OIL COMPANY
ENGINEERING CENTER
PONCA CITY, OKLAHOMA

NF-2
REACTOR RELIEF CONTAINMENT
AMS KILL SYSTEM
OKLAHOMA CITY PVC PLANT

APD: WRT
DATE: 7/7/80

No. SD-2823-45-2-B

VAB 0001100011

CONOCO

ENGINEERING CENTER

PONCA CITY, OKLAHOMA

SPECIFICATION SHEET

AFE NO. _____
DATE 6-12-80 W O NO _____
MADE BY MJH INQ NO _____
APP'D BY WRJ REQ. NO. _____
B M NO _____ P O NO _____

PLANT OKLAHOMA CITY PVC PLANT PROJECT: REACTOR RELIEF CONTAINMENT - BLOWDOWN DRUM

ITEM NO
SERVICE NA-1 and NA-2

SERVICE : BLOWDOWN DRUM AGITATOR

TYPE : TOP ENTERING, TURBINE TYPE (NOTE 1)

BLADES :

NUMBER OF BLADES - 4

AGITATOR :

DIAMETER - 52" (NOTE 2) , 56" (NOTE 3)

SPEED - 68 RPM AT FULL LOAD

IMPELLER HEIGHT FROM BOTTOM INSIDE OF VESSEL - 26"

MATERIAL OF CONSTRUCTION :

SHAFT - 304 L S.S.

IMPELLER - 304L S.S.

GEAR BOX

MIXCO MODEL 84 S (NOTE 2)

MIXCO MODEL 85 S (NOTE 3)

MOTOR

15 HP, 1750 RPM (NOTE 2) ; 20 HP, 1750 RPM (NOTE 3)

FLUID COUPLING

REQUIRED

MECHANICAL SEALS

DOUBLE . SEAL FLUID IS WATER.

VESSEL DATA

BLOWDOWN DRUM DIMENSIONS - 11' x 22' T-T WITH 2:1 ELLIPTICAL HEADS (NOTE 2)
- 13' x 26' T-T WITH 2:1 ELLIPTICAL HEADS (NOTE 3)

BLOWDOWN DRUM VOLUME - 18,000 GAL. (NOTE 2) ; 30,000 GAL. (NOTE 3)

BLOWDOWN DRUM AGITATOR NOZZLE - 12" PAD (NOTE 2)
14" PAD (NOTE 3)

7/11/80

SHEET 1 OF 2 REV

F-270-9A

CONOCO

ENGINEERING CENTER
PONCA CITY, OKLAHOMA
SPECIFICATION SHEET

A F E NO
DATE 6 12 80 W O NO
MADE BY MJH INQ NO
APP'D BY WRF REQ NO
R M NO P O NO

PLANT PROJECT REACTOR RELIEF CONTAINMENT

ITEM NO
SERVICE NA-1, NA-2 (cont.)

BAFFLE DATA

No. OF BAFFLES - 4

WIDTH - 15" (NOTE 2) ; 20" (NOTE 3)

NOTES

1. DATA IS PRELIMINARY DESIGN ONLY. VENDOR TO SUPPLY DETAILS
2. 18,000 GALLON BLOWDOWN DRUM
3. 30,000 GALLON BLOWDOWN DRUM.

7/11/80

SHEET 2 OF 2 REV

F-270-9A

CONOCO

Continental Oil Company
Engineering Center
Ponca City, Oklahoma

Centrifugal Pumps

SPECIFICATION SHEET
PROJECT NO
ATT NO
DATE 6-5-80 INQ NO
MADE BY MJH REQ NO
APP'D. BY LLR P.O. NO.

PLANT OKLAHOMA CITY PVC PROJECT REACTOR RELIEF CONTAINMENT - BLOWDOWN DRUM

1	APPLICABLE TO: ESTIMATE (X) PURCHASE ( )							VENDOR
2	NG-1							MANUFACTURER
3	SERVICE NF-1 Blowdown Drum Slurry Pump							SIZE AND TYPE
4								STAGES
5	MOTOR DRIVE (X) TURBINE ( )							RPM
6								ROTATION FACING CPLG.
7		OPERATING CONDITIONS						EFF.
8	LIQUID VCM-H_2O	U.S. gpm at PT, NOR. 150		RATED 150				HYD. H.P.
9		DISCH PRESS., psig 170						RATED B.H.P.
10	PT F 145	SUCT PRESS., psig MAX 200		RATED 140				RATED HP DRIVER
11	SP GR at PT 1.08	DIFF PRESS., psi 30						DIA. IMP.
12	VAP PRESS. at PT, psia 153	DIFF HEAD, ft 64						MAX. DIA. IMPELLER
13	VIS at PT, ~~Ssu~~ cP 0.5	NPSH AVAIL., ft 3						N.P.S.H. REQD. IN
14	CORR/EROS caused by PVC							FT. FLUID PUMPED
15		CONSTRUCTION						
16	CASING MOUNTING (CENTERLINE) (FOOT) (BRACKET) (VERTICAL)							MFRS. BEARING No.
17	SPLIT (AXIAL) (RADIAL)							RADIAL
18	TYPE (SINGLE VOLUTE) (DOUBLE VOLUTE) (DIFFUSER)							THRUST
19	TAPPED OPENINGS (VENT X) (DRAIN X) (GAGE CONNS.)							
20	NOZZLES	LINE SIZE	ANSI RATING	FACING	POSITION			~~PACKING~~ OR SEAL Mechanical
21	SUCTION	4	150	RF				FLUSHING, GPM 2 (water)
22	DISCHARGE	3	150	RF				
23	MATERIAL CODE–EXTERNAL CASING S			INTERNAL PARTS X				MATERIAL EXCEPTIONS BY VENDOR
24	I–CAST IRON	INTERNALS CODE	I	B	S	C	SPECIAL MTL. CODE	
25	B–BRONZE	IMPELLER	I	B	S	C	X	
26	S–STEEL	INNER CASE PARTS	I	I	S	C		
27	C–11-13% Cr	SLEEVE (PACKED)	Cr	Cr	Af	Af		
28	A–ALLOY	SLEEVE (SEAL)	C	C	C	C		
29	h–HARDENED	WEAR PARTS	I	B	Cr	Cr		
30	f–FACED	SHAFT	S	S	S	S		
31	X–304 SS							
32								
33	MOTOR DRIVER BY Vendor		TURBINE DRIVER BY					WATER COOLING
34	ITEM NO. MTD BY		ITEM NO. MTD BY					BEARINGS
35	HP RPM FRAME		HP RPM MAT'L					STUFF BOX
36	MFR		MFR and TYPE					PEDESTAL
37	OR COMPANY APPV'D, EQUAL		INLET STEAM, psig TEMP F°					GLAND
38	TYPE TEFC INSUL		EXHAUST					TOTAL C.W. REQD.
39	ENC TEMP RISE C°		STEAM RATE, FL lb/BHP/HR					COUPLING, MFR
40	VOLTS/PHASE/CYCLES 460/3/60		BEARINGS LUBE					COUPLING, TYPE
41	BEARINGS LUBE		NOZZLES	SIZE	ANSI RATING	FACING	POSITION	GUARD
42	FULL LOAD AMPS		INLET					MECH. SEAL, MFR.
43			EXHAUST					MECH. SEAL, TYPE Double
44	REMARKS:							PACKING
45	Pump to have open impeller. Pump to operate at 1750 rpm.							
46	Pumpcase to be rated for seal flush water of 220 psig							DELIVERY, WEEKS
47	and 100°F. HHP = 3.5							PUMP PRICE
48	PUMP IS TO BE MANUFACTURED IN ACCORDANCE WITH THE FOLLOWING STANDARDS.							DRIVER PRICE
49	API-610							EST. FREIGHT
50	( ) INDICATES ITEM CHANGED ON LATEST REVISION.							TOTAL PRICE

NOTE: THE SOUND LEVELS GENERATED BY THE PUMP AND DRIVER SHALL BE WITHIN THE LIMITS OF THE ATTACHED SPECIFICATION.

QUOTATION WILL NOT BE CONSIDERED IF SUPPLIER DOES NOT COMPLETE RIGHT HAND COLUMN

7/11/80

SHEET OF REV

VAB.0001100014

4-424-S
1-76

CONOCO

ENGINEERING CENTER

PONCA CITY, OKLAHOMA

SPECIFICATION SHEET

A F E NO. _____
DATE 6-12-80 W O NO _____
MADE BY MJH INQ NO _____
APP'D BY WRA REQ NO. _____
B M NO _____ P O NO. _____

PLANT OKLAHOMA CITY PVC PLANT PROJECT REACTOR RELIEF CONTAINMENT - BLOWDOWN DRUM

ITEM NO
SERVICE BLOWDOWN DRUM SPRAY NOZZLES (2 REQUIRED)

NOZZLES TO BE MULTIPLE JET TYPE. JETS MUST ALLOW PASSAGE OF 1/4" PARTICLES. CAPACITY TO BE 350 GPM PER NOZZLE. VENDOR TO SUPPLY DESIGN.

7/11/80

SHEET _____ OF _____ REV _____

F-270-9A

INSTRUMENT LIST

REACTOR RELIEF CONTAINMENT--BLOWDOWN DRUM

OKLAHOMA CITY PVC PLANT

Item No.	Service
CV-1	Recovery/Steam Stripping Header Valve
CV-2	Recovery Valve
CV-3	Recovery Valve
CV-4	AMS Dump Valve
CV-5	Slurry Dump to Blowdown Drum Valve
CV-6	Hot Water Charge Valve
CV-7	Hot Water Charge Valve
FI-1	Slurry Pump Seal Flush Flow
FI-2 and FI-3	Agitator Seal Flush Supply Flow
FCV-2 and FCV-3	Agitator Seal Flush Return Flow
LG-4	AMS Injection Pot Level Gauge
LI-1	Blowdown Drum Level Indicator
LAH-1	Blowdown Drum High Level Alarm
LAL-2	Blowdown Drum Low Level Alarm
LS-4	AMS Injection Pot Low Level Switch
PG-1	Slurry Pump Suction Pressure
PG-2	Slurry Pump Discharge Pressure
PG-3	Nitrogen Pressure to AMS Injection Pot
PG-4	Nitrogen Pressure of Nitrogen Bottle
PG-5	AMS Injection Pot Pressure
PG-6	Charge Water Header Pressure
PG-7	Slurry Dump Header Pressure
PG-8	Agitator Seal Water Supply Pressure
PG-9	Agitator Seal Water Return Pressure
PG-10	Agitator Seal Water Supply Pressure
PG-11	Agitator Seal Water Return Pressure
PI-1	Blowdown Drum Pressure Indicator
PAL-5	AMS Injection Pot Low Level Alarm
PCV-1	Nitrogen Pressure Regulator
PAL-6 and PAL-7	Low Agitator Seal Water Pressure Alarm
PSV-1	Blowdown Drum Safety Valve
PSV-2	Blowdown Drum Safety Valve
PSV-3	Blowdown Drum Safety Valve
PSV-4	Blowdown Drum Safety Valve
PSV-5	Blowdown Drum Outlet Line Safety Valve
PSV-6	Water Spray Line Safety Valve
PSV-7	AMS Injection Pot Safety Valve

MJH:lkm
7/11/80

Instrument List
Page 2

Item No.	
RD-1	Blowdown Drum Rupture Disc
RD-2	Blowdown Drum Rupture Disc
RD-3	Blowdown Drum Rupture Disc
RD-4	Blowdown Drum Rupture Disc
RD-7	AMS Injection Pot Rupture Disc
SW-4	Reactor Blowdown Switch
SW-5A thru SW-5F	Reactor Blowdown Switch

(1) All signals to the board are electric (4-20 ma).
(2) All electric instrumentation is to be intrinsically safe.

MJH-1km
7/11/80

Continental Oil Company
Engineering Center
Ponca City, Oklahoma
Control Valves

SPECIFICATION SHEET
PROJECT NO
A F E NO
DATE 6-12-80 INQ NO
MADE BY MJH REQ NO
APP'D BY WRC P O NO

PLANT OKLAHOMA CITY PVC PROJECT REACTOR RELIEF CONTAINMENT - BLOWDOWN DRUM

	GENERAL														
1	ITEM NO & TAG				CV-1 (6)				CV-2 (6)				CV-3 (6)		CV-4 (6)
2	SERVICE				REC/STM STRIPPING				REC/STM STRIPPING				REC/STM STRIPPING		AMS Dump
3	LINE SIZE				6"				4"				4"		2"
4	MANUFACTURER				TUFLINE (1)				TUFLINE (1)				TUFLINE (1)		TUFLINE (1)
5	MODEL NO.														
6					ON-OFF				ON-OFF				ON-OFF		ON-OFF
	SERVICE CONDITIONS														
7	FLUID				STEAM, VCM VAPOR				STEAM, VCM VAPOR				STEAM, VCM VAPOR		AMS, VCM VAPOR
8	TEMP F	NORMAL		MAX		250 (2)				250 (2)				250 (2)	70	120
9	PRESS., INLET, PSIG, NORM			MAX		200 (3)				200 (3)				200 (3)	300	400
10	ΔP, PSI	MIN.	NORMAL	MAX			200				200			200		400
11	MOLECULAR WEIGHT			A.P.I.											118	
12	SP GR @ 60 F.			@ F.T.											0.91	
13	WEIGHT % VAPOR IN			OUT											0	0
14	VISCOSITY @ F.T. & P.															
15	RATE NOR. LB HR. (SCFH) GPM															
16	RATE MAX. LB HR (SCFH) GPM															
17	NORMAL FLOW Cv															
18																
	BODY														
19	BODY SIZE	PORT SIZE			6"				2"				2"		2"
20	TYPE (ANGLE OR GLOBE)				PLUG				PLUG				PLUG		
21	MATERIAL				C.S.				C.S.				C.S.		304 S.S.
22	END CONNECTIONS				150# R.F.				150# R.F.				150# RF.		300# R.F.
23	BONNET														
24	Cv														
25	LUBRICATOR	ISO. VAL													
26	PACKING														
27	TRAVEL INDICATOR														
28	FIRE SAFE				YES				YES				YES		YES
	TRIM														
29	TYPE INNER VAL	NO OF PORTS			PLUG				PLUG				PLUG		PLUG
30	PLUG & SEAT MATERIAL				316 S.S.				316 S.S.				316 S.S.		304 S.S.
31	SEAT OR SLEEVE				TFE				TFE				TFE		TFE
	ACTUATOR														
32	TYPE				BETTIS				BETTIS				BETTIS		
33	FAILURE POSITION				(4)				(4)				(4)		OPEN
34															
	POSITIONER														
35	INPUT SIGNAL	OUTPUT SIGNAL													
36	BYPASS	GAUGES													
37	MANUFACTURER														
38	MODEL NO.														
	ACCESSORIES														
39					(5)				(5) INTERLOCKED ⟷				(5)		(5) INTERLOCK WITH CV-5

NOTES:

7/11/80

( ) INDICATES ITEM CHANGED ON LATEST REVISION.
(X) INDICATES MANUFACTURER TO GIVE REQUESTED INFORMATION IN HIS QUOTATION.

SHEET 1 OF 3 REV.

4-435
REV. 7-24-69

Continental Oil Company
Engineering Center
Ponca City, Oklahoma
Control Valves

SPECIFICATION SHEET
PROJECT NO
A F E NO
DATE 6-12-80 INQ. NO
MADE BY MJH REQ. NO.
APP'D BY WVA P.O. NO.

PLANT Oklahoma City PVC PROJECT Reactor Relief Containment - Blowdown Drum

	GENERAL											
1	ITEM NO. & TAG				CV-5 (6)		CV-6		CV-7			
2	SERVICE				SLURRY DUMP To BLOWDOWN DRUM		HOT WATER CHARGE		HOT WATER CHARGE			
3	LINE SIZE				6"		6"		6"			
4	MANUFACTURER				TUFLINE (1)		TUFLINE (1)		TUFLINE (1)			
5	MODEL NO.											
6					ON-OFF		ON-OFF		ON-OFF			
	SERVICE CONDITIONS											
7	FLUID				PVC SLURRY		WATER		WATER			
8	TEMP F	NORMAL		MAX	200	250(2)	135	250(2)	135	250(2)		
9	PRESS., INLET, PSIG	NORM.		MAX		250 (8)	150	250(8)	150	250(8)		
10	ΔP, PSI	MIN.	NORMAL	MAX		250		250		250		
11	MOLECULAR WEIGHT			A.P.I.								
12	SP GR @ 60 F.			@ F.T.								
13	WEIGHT · VAPOR IN			OUT								
14	VISCOSITY @ F.T. & P.											
15	RATE, NOR., LB HR (SCFH) GPM											
16	RATE, MAX., LB HR (SCFH) GPM											
17	NORMAL FLOW Cv											
18												
	BODY											
19	BODY SIZE	PORT SIZE			6"		6"		6"			
20	TYPE (ANGLE OR GLOBE)				PLUG		PLUG		PLUG			
21	MATERIAL				316 S.S.		316 S.S.		316 S.S.			
22	END CONNECTIONS				150# R.F.		150# RF		150# R.F.			
23	BONNET											
24	Cv											
25	LUBRICATOR	ISO VAL										
26	PACKING											
27	TRAVEL INDICATOR											
28	FIRE SAFE				YES		YES		YES			
	TRIM											
29	TYPE INNER VAL	NO. OF PORTS			PLUG		PLUG		PLUG			
30	PLUG & SEAT MATERIAL				C.S.		316 S.S.		316 S.S.			
31	SEAT OR SLEEVE				TFE		TFE		TFE			
	ACTUATOR											
32	TYPE				BETTIS		BETTIS		BETTIS			
33	FAILURE POSITION				(4)		(4)		(4)			
34												
	POSITIONER											
35	INPUT SIGNAL	OUTPUT SIGNAL										
36	BYPASS	GAUGES										
37	MANUFACTURER											
38	MODEL NO.											
39	**ACCESSORIES**				INTERLOCK WITH CV-4 (5)		INTERLOCK WITH CV-5 (5)		INTERLOCK WITH CV-5 (5)			

NOTES:

7/11/80

( ) INDICATES ITEM CHANGED ON LATEST REVISION.
(X) INDICATES MANUFACTURER TO GIVE REQUESTED INFORMATION IN HIS QUOTATION.

SHEET 2 OF 3 REV.

4-435
REV. 7-24-80

NOTES FOR CONTROL VALVE SPECIFICATIONS

(1) All Tufline on-off valves need a tap for the bleeder on the valve body.
(2) 250°F at 15 psig.
(3) 200 psig at 172°F.
(4) On instrument air failure, valve fails as is; and on electrical failure, the valve will close.
(5) To be equipped with open-close switch with lights.
(6) The solenoid valve is to be Asco Model No. 8344B5MO or company-approved equal with explosion-proof case and operating voltage of 24-volt DC.
(7) Deleted.
(8) 250 psig at 100°F.

MJH-lkm
7/11/80

ENGINEERING CENTER

PONCA CITY, OKLAHOMA
SPECIFICATION SHEET
FLOW INSTRUMENTS

A.F.E. NO
DATE 6-12-80 W.O. NO
MADE BY MJH INQ. NO.
APP'D BY WRA REQ. NO.
B.M. NO P.O. NO

PLANT OKLAHOMA CITY PVC PROJECT: REACTOR RELIEF CONTAINMENT - BLOWDOWN DRUM

1	TAG NO.		FI-1		FI-2		FI-3		
2	SERVICE		NG-1 SEAL		NA-1 SEAL		NA-2 SEAL		
3			FLUSH		FLUSH		FLUSH		
4	INSTRUMENT, TYPE		FLOW INDICATOR		FLOW INDICATOR (2)		FLOW INDICATOR (2)		
5	LOCATION		LOCAL		LOCAL		LOCAL		
6	ELEMENT TYPE		ROTAMETER (1)		FLOW NOZZLE		FLOW NOZZLE		
7	LOCATION		LINE WU-8		LINE WU-14		LINE WU-17		
8	LINE SIZE, IN.	SCHEDULE	3/4	80	3/4		3/4		
9	BORE, IN.								
10	RANGE, IN. H_2O		.1 to .5						
11	METER FACTOR								
12	VALVE TYPE								
13									
14	LOCATION								
15	MATERIAL								
16	BODY SIZE	PORT SIZE							
17	PLUG FORM								
18	ΔP MIN	NOR MAX							
19	CALC C_v	VALVE C_v							
20	AIR TO OPEN OR CLOSE								
21	MAX SHUTOFF ΔP								
22	FLUID		WATER		WATER		WATER		
23	TEMPERATURE °F		60		80		80		
24	PRESSURE PSIG		200		210		210		
25	°API (M.W.)		(18)		(18)		18		
26	SP. GR. AT STD. COND.		1.0		1.0		1.0		
27	SP. GR. AT P & T		1.0		1.0		1.0		
28	CP/CV AT T & P	COMPRESSIBILITY							
29	VISCOSITY AT P & T		1.13		0.86		0.86		
30	RATE NORMAL GPM		.25		1		1		
31	RATE MAX	MIN GPM	.5	.1	2	0	2	0	
32	NOTES								

1) To be equipped with needle valve.

2) To be RCM INDUSTRIES - SERIES 7000 FLO-GAGE MODEL ½-73-L-3-DFH WITH S.S. CONSTRUCTION AND THREADED CONNECTIONS, 0.4-3.0 RANGE, OR COMPANY APPROVED EQUIVALENT

7/11/80

SHEET ____ OF ____ REV ____

CONOCO

ENGINEERING CENTER

PONCA CITY, OKLAHOMA

SPECIFICATION SHEET

SELF CONTAINED FLOW REGULATOR

A.F.E. NO. _____
DATE 6-13-80 W.O. NO _____
MADE BY MJH INQ. NO _____
APP'D BY WEK REQ. NO. _____
B.M. NO _____ P.O. NO. _____

PLANT OKLAHOMA CITY PVC PROJECT REACTOR RELIEF CONTAINMENT-BLOWDOWN DRUM

ITEM NO. / SERVICE FCV-2 AND FCV-3 (1)

SERVICE	AGITATOR SEAL WATER RETURN
FLUID	WATER
TEMPERATURE, °F	80
VISCOCITY @ T, cp	0.86
PRESSURE @ REGULATOR	
INLET, PSIG Norm-MAX	210-300
OUTLET, PSIG	20
FLOW RATE, GPM Norm/MAX	1/2
SPECIFIC GRAVITY @ T	1.0
MATERIAL OF CONSTRUCTION	S.S.
CONNECTIONS	SCREWED
LOCATION	FCV-2 IN WU-15
	FCV-3 IN WU-17

NOTES:

1) REGULATOR TO BE KATES MODEL - ½-MFA1-1, 0.2 TO 3.0 GPM RANGE, OR COMPANY APPROVED EQUAL; FACTORY SET POINT TO BE 1 GPM

7/11/80

SHEET _____ OF _____ REV

F-270-9A

ENGINEERING CENTER

PONCA CITY, OKLAHOMA

SPECIFICATION SHEET

GAUGE GLASSES & COCKS

A.F.E. NO. _____
DATE 6-12-80 W. O. NO. _____
MADE BY MJH INQ. NO. _____
APP'D BY WRK REQ. NO. _____
B. M. NO. _____ P. O. NO. _____

PLANT OKLAHOMA CITY PVC PROJECT REACTOR RELIEF CONTAINMENT - BLOWDOWN DRUM

1	GAUGE GLASSES								31	GAUGE COCKS					
2	SUPPLY	GAUGES & COCKS X		GAUGES ONLY					32	SUPPLY		COCKS ONLY			
3	NO NIPPLES REQUIRED								33	TYPE	OFFSET	ANGLE			
4	TYPE	TRANSPARENT	TUBULAR	REFLEX X					34	CONNECTIONS-NPT					
5	CONNECTIONS	1/2"	3/4" X	"					35		VESSEL	GAUGE	GAUGES		
6		TOP & BOTTOM X	SIDE	BACK					36		MALE	FEMALE	FEMALE		
7		WELDING PAD	OTHER						37		1/2"	1/2"	1/2"		
8	MATERIAL	STEEL	OTHER						38		3/4"	3/4"	3/4"		
9	MINIMUM RATING	400	PSIG @	120	°F				39		OTHER				
10									40		BODY		TRIM		
11									41	MAT'L					
12									42	MINIMUM RATING		PSIG @		°F	
13									43	CONSTRUCTION:	PLAIN		QUICK		
14									44		CLOSING		CLOSING		
15									45		HANDWHEEL		LEVEL HANDLE		
16									46	VESSEL CONN.	PLAIN UNION		SOLID SHANK		
17									47		SPHERICAL UNION		OTHER		
18	ACCESSORIES								48						
19	ILLUMINATORS:								49	GAUGE CONN.	PLAIN UNION		PLAIN		
20	MICA SHIELDS:								50		SPHERICAL UNION		OTHER		
21	HEATING-COOLING CHAMBERS								51						
22	INTERNAL	EXTERNAL							52	BONNET	SCREWED	UNION	BOLTED		
23	NON-FROSTING TYPE:								53	SCREW	INSIDE	OUTSIDE			
24	CALIBRATED SCALE								54	RENEWABLE SEAT		YES	NO		
25	SUPPORT PLATES:								55	BALL CHECKS		YES	NO		
26	GUARD RODS:								56	PACKING		MFR STD	OTHER		
27	OTHER								57						
28									58	MFR MODEL NO.					
29									59						
30									60						

61 / 62	TAG NO.	REV.	QUAN.	NO. OF SECT.	VISIBLE LENGTH	℄ CPLGS	MFR. MOD. NO.	OPER. PRESS PSIG	OPER. TEMP.	SERVICE	ACCES-SORIES	NOTES
63	LG-4		1	3	38 5/8			300	70	NF-2		
64												
65												
66												
67												
68												
69												
70												
71												
72												
73												
74												
75												
76												
77												
78												
79												
80												

NOTES

7/11/80

INSTRUMENT SOCIETY OF AMERICA

SHEET _____ OF _____ REV _____

4-446-S

ENGINEERING CENTER

PONCA CITY, OKLAHOMA
SPECIFICATION SHEET
LIQUID LEVEL INSTRUMENTS

A.F.E. NO. ____
DATE 6-12-80 W. O. NO. ____
MADE BY MJH INQ. NO. ____
APP'D BY WRA REQ. NO. ____
B. M. NO. ____ P. O. NO. ____

PLANT OKLAHOMA CITY PVC PROJECT: REACTOR RELIEF CONTAINMENT - BLOWDOWN DRUM

1	TAG NO.	LI-1	LAH-1	LAL-2	LS-4
2	SERVICE	NF-1 LEVEL	NF-1 HIGH	NF-1 LOW	LOW LEVEL SWITCH (5)
3			LEVEL ALARM	LEVEL ALARM	
4	INSTRUMENT, TYPE	INDICATOR	HIGH LEVEL ALARM	LOW LEVEL ALARM	(6)
5	LOCATION	BOARD (1)	BOARD (1)	BOARD (1)	
6	ELEMENT, TYPE	d/P CELL (2)	CAPACITANCE PROBE	CAPACITANCE PROBE	MECHANICAL FLOAT
7	LOCATION	NF-1	NF-1	NF-1	NF-2
8	RANGE, INCHES	?	(3)	(4)	(7)
9	INTERFACE	LIQ/VAP			N_2 GAS/AMS (LIQ)
10	UPPER DENSITY, LB./CU. FT.	2.2			1.55
11	LOWER DENSITY, LB./CU. FT.	85			56.8
12	TEMPERATURE °F	170			AMBIENT
13	PRESSURE PSIG	0 - 250			300
14	VALVE TYPE				SEE CV-4
15					
16	LOCATION				
17	MATERIAL				
18	BODY SIZE / PORT SIZE				
19	PLUG FORM				
20	ΔP / MIN. / NOR. / MAX.				
21	CALC. Cv / VALVE Cv				
22	AIR TO OPEN OR CLOSE				
23	MAXIMUM SHUTOFF ΔP				
24	FLUID	VCM/PVC SLURRY	VCM/PVC SLURRY	VCM/PVC SLURRY	
25	TEMPERATURE °F	170	170	170	
26	PRESSURE PSIG	200	200	200	
27	°API (M.W.)				
28	SP. GR. AT STD. COND.				
29	SP. GR. AT P. & T.				
30	WEIGHT % VAPOR IN–OUT				
31	VISCOSITY AT P. & T.				
32	RATE, NORMAL				
33	RATE:				
34	MAX. / MIN.				
35	NOTES:				

(1) ALL SIGNALS TO THE BOARD ARE ELECTRONIC.

2.) dP CELL TO BE PAD-MOUNTED, EXTENDED DIAPHRAGM TYPE. BALANCE LEG TO HAVE SEALED DIAPHRAGM TO BE INSTALLED ON DRUM.

3) HIGH LEVEL ALARM TO SOUND WHEN LEVEL IS 24 INCHES FROM TOP OF DRUM

4) LOW LEVEL ALARM TO SOUND WHEN LEVEL IS 6 INCHES FROM BOTTOM OF DRUM

5.) LS-4 IS A LOW LEVEL SWITCH FOR AMS INJECTION POT NF-2. INTERLOCK WITH CV-4. WHEN LEVEL IS BELOW LS-4, CV-4 SHOULD CLOSE.

6) LS-4 SHOULD BE TIED INTO 24 VDC BACKUP POWER SUPPLY

7.) THE LOW LEVEL SWITCH IS 3" ABOVE THE BOTTOM TANGENT OF NF-2.

7/11/80

SHEET ____ OF ____ REV ____

CONOCO

ENGINEERING CENTER

PONCA CITY, OKLAHOMA

SPECIFICATION SHEET

PRESSURE GAUGES

AFE NO. _____
DATE 6-12-80 W. O. NO. _____
MADE BY MTH INQ. NO. _____
APP'D BY WBL REQ. NO. _____
B. M. NO. _____ P. O. NO. _____

PLANT OKC PVC PROJECT REACTOR RELIEF CONTAINMENT - BLOWDOWN DRUM

1	TAG		INSTRUMENT	OPERATING	OPERATING	
2	NO.	SERVICE	RANGE, PSIG	PRESS, PSIG	TEMP., °F	LOCATION
3	PG-1	NG-1 SUCTION PRESSURE	0-200	140	145	LINE PS-9
4	PG-2	NG-2 DISCHARGE PRESS	0-200	170	159	LINE PS-6
5	PG-3	PCV-1 OUTLET PRESS	0-400	300	70	LINE IN-12
6	PG-4	PCV-1 INLET PRESS.	0-3000	2200	70	LINE IN-12
7	PG-5	NF-2 PRESSURE	0-400	300	70	NF-2
8	PG-6	CHARGE WATER HEADER PRESS.	0-300	200	170	NEAR CV-6
9	PG-7	REACTOR DUMP PRESSURE	0-300	200	170	NEAR CV-5
10	PG-8	NA-1 SEAL WATER SUPPLY	0-400	220	80	LINE WU-15
11	PG-9	NA-1 SEAL WATER RETURN	0-400	220	80	LINE WU-16
12	PG-10	NA-2 SEAL WATER SUPPLY	0-400	220	80	LINE WU-17
13	PG-11	NA-2 SEAL WATER RETURN	0-400	220	80	LINE WU-18
14						
15						
16						
17						
18						
19						
20						
21						
22						
23						
24						
25						
26						
27						
28						
29						
30						
31						
32						
33						
34						
35						
36						
37						
38						
39						
40						
41						
42						
43						
44						
45						
46						
47						
48						
49						
50						
51						
52						
53						
54						
55						
56						

QUOTATION WILL NOT BE CONSIDERED IF SUPPLIER DOES NOT COMPLETE RIGHT HAND COLUMN.

7/11/80

SHEET _____ OF _____ REV _____

conoco

Continental Oil Company
Engineering Center
Ponca City, Oklahoma

Pressure Instruments

SPECIFICATION SHEET
PROJECT NO. _____
A.F.E. NO. _____
DATE 6 12 80 INQ. NO. _____
MADE BY MJH REQ. NO. _____
APP'D. BY _____ P.O. NO. _____

PLANT OKLAHOMA CITY PVC PROJECT REACTOR RELIEF CONTAINMENT - BLOWDOWN DRUM

1	TAG NO		PI-1		PAL-5		PAL-6		PAL-7		
2	SERVICE		NF-1		NF-2 PRESSURE		LOW NA-1 SEAL		LOW NA-2 SEAL		
3			PRESSURE				WATER RETURN PRESS		WATER RETURN PRESS.		
4	INSTRUMENT, TYPE		PRESS INDICATOR		ALARM		LOW PRESS ALARM		LOW PRESS. ALARM		
5	LOCATION		BOARD (1)		BOARD (1)		BOARD		BOARD		
6	RANGE, PSIG		0-300		0-300 (2)						
7	ELEMENT										
8	TYPE	MATERIAL	DIAPHRAGM	316 SS	SWITCH		DIAPHRAGM	316 S.S.	DIAPHRAGM	316 S.S.	
9	LOCATION		NF-1		NF-2		LINE WU-15		LINE WU-17		
10	TEMPERATURE °F		145				80		80		
11	PRESSURE PSIG		140				175 PSIG (SET)		175 PSIG (SET)		
12	VALVE TYPE										
13											
14	LOCATION										
15	MATERIAL										
16	BODY SIZE	PORT SIZE									
17	PLUG FORM										
18	Δ P	MIN. / NOR. / MAX.									
19	CALC. Cv	VALVE Cv									
20	AIR TO OPEN OR CLOSE										
21	MAX. SHUTOFF Δ P										
22	FLUID		VCM VAPOR				WATER		WATER		
23	TEMPERATURE °F MAX		182				100		100		
24	PRESSURE PSIG MAX		225				300		300		
25	°API (M.W.)										
26	SP. GR. AT STD. COND.										
27	SP. GR. AT P.&T.										
28	WEIGHT % VAPOR IN-OUT										
29	VISCOSITY AT P.&T.										
30	RATE, NORMAL										
31	RATE	MAX. / MIN.									
32	NOTES										

1) INDICATORS AND ALARMS ARE TO BE TIED INTO THE 24 VDC BACKUP POWER SYSTEM.
2) SETPOINT TO BE 250 PSIG AND ADJUSTABLE

7/11/80

SHEET _____ OF ____ REV. _____

CONOCO

ENGINEERING CENTER

PONCA CITY, OKLAHOMA

SPECIFICATION SHEET

SELF-CONTAINED PRESSURE REGULATORS

A F E NO
DATE 6-12-80 W O NO
MADE BY MJH INQ NO
APP'D BY REQ NO
B M NO P O NO

PLANT OKLAHOMA CITY PVC PROJECT REACTOR RELIEF CONTAINMENT - BLOWDOWN DRUM

ITEM NO ~~SERVICE~~ PCV-1

~~Item No. and Tag~~

Service PA-1 (1)

Manufacturer FISHER

Model No. 1301-G

Line Size, Inches: 1

Stream and Valve

Fluid NITROGEN GAS

Temperature, °F: 70

Inlet Pressure, psig, ~~Norm~~-Max 2200 (DELIVERED PRESSURE)

Outlet Pressure, psig Min-Norm-Max 0 - 300 - 500

Specific Gravity ~~at T and P~~ 0.97

Viscosity at T and P, cp : 0.018

Molecular Weight : 28

Rate, SCFH, Norm-~~Max-Min~~

Body Size, Inches

Orifice Size, Inches

Notes: (1) NITROGEN CYLINDER PRESSURE REGULATOR WITH PRESET / ADJUSTABLE SAFETY VALVES, BRASS BODIES, AND INLET / OUTLET PRESSURE GAUGES

7/11/80

SHEET ____ OF ____ Rt

ENGINEERING CENTER

PONCA CITY, OKLAHOMA

SPECIFICATION SHEET

RELIEF VALVES

A F E NO. _____
DATE 6-12-80 W O NO. _____
MADE BY MJH INQ. NO. _____
APP'D BY _____ REQ. NO. _____
B. M. NO. _____ P. O NO. _____

PLANT OKLAHOMA CITY PVC PROJECT REACTOR RELIEF CONTAINMENT - BLOWDOWN DRUM

	GENERAL								
1	ITEM NO. & TAG		PSV-1		PSV-2, PSV-3 PSV-4		PSV-5		PSV-6
2	RELIEVES EQUIPMENT NO.		NF-1		NF-1		LINE PS-6		LINE 3-WP-2
3	MANUFACTURER		CONSOLIDATED (1)		CONSOLIDATED (1)		CONSOLIDATED (1)		
4	MODEL NO.		1910-30-2 TC		1910-30-2 TC		1970C		
5	Number Required		1		NOTE 4		1		
	SERVICE CONDITIONS								
6	FLUID		VCM/H2O/PVC(6)		VCM/H2O/PVC(6)		VCM/H2O (6)		H2O
7	STATE		(2)		(2)		VAPOR/LIQUID		LIQUID
8	REQUIRED CAPACITY								
9	MOL. WT.	SP. GR.						18	1.0
10	VISCOSITY							.86	
11	COMPRESSIBILITY FACTOR								
12	DESIGN PRESS. OF EQUIPMENT								
13	PRESS PSIG OPERATING	RELIEVING	140	205	140	215	170	260	200	260
14	TEMP °F FLOWING	RELIEVING	145	182	145	182	159	200	100	100
15	BACK PRESSURE PSIG		0 (NOTE 5)		0 (NOTE 5)		0		0	
16	DIFFERENTIAL SET PRESSURE		205		215		260		260	
17	ACCUMULATION %								
18	BLOW DOWN %		10 (3)		10 (3)		10 (3)			
19									
	BASIS OF SELECTION								
20	CODE REQUIREMENT								
21	FIRE — EXPOSED AREA								
22	FIRE — INSULATION THICKNESS								
23	OTHER BASIS		RUNAWAY		RUNAWAY		THERMAL		THERMAL
24			REACTION		REACTION		EXPANSION		EXPANSION
	DESIGN DETAILS								
25	DESIGN TYPE		BALANCED BELLOWS		BALANCED BELLOWS		CONVENTIONAL		CONVENTIONAL
26	SEAT TYPE		DISC		DISC		DISC		DISC
27	BONNET (OPEN OR CLOSED)		CLOSED		CLOSED				
28	INLET SIZE, RATING, FACING		8" 300# RF		8" 300# R.F.		3/4" 150# RF		3/4" MALE SCREWED
29	OUTLET SIZE, RATING, FACING		10" 150# RF		10" 150# R.F.		1" 150# RF		1" FEMALE SCREWED
30	CALCULATED AREA								
31	ORIFICE LETTER	ACTUAL AREA	T	26.0	T	26.0	D	.110	D	.110
	MATERIALS								
32	BODY	BONNET	CS	CS	CS	CS	CS	CS	CS	CS
33	SEAT & DISK		SS		SS		SS		SS	
34	GUIDE & RING		SS		SS		SS		SS	
35	SPRING		CS		CS		CS		CS	
36	BELLOWS		SS		SS					
	ACCESSORIES								
37	LIFTING LEVER (PLAIN OR PACKED)								
38	GAG								
39	CODE STAMP								
40	CAP (SCREWED OR BOLTED)		SCREWED		SCREWED		SCREWED		SCREWED
41	OTHER								

NOTES: 1) OR COMPANY APPROVED EQUAL 2) INCLUDES SOLIDS, LIQUID, VAPOR
MANUFACTURER SHALL VERIFY SELECTION OF ORIFICE SIZE AND MATERIALS. 3) BASED ON LIQUID RELIEF
VALVES SHALL MEET DIMENSION REQUIREMENTS OF API RP-526. 4) ONE REQUIRED FOR 18,000 GALLON DRUM,
VALVES SHALL MEET TEST REQUIREMENTS OF API RP-527. THREE REQUIRED FOR 30,000 GALLON DRUM.
5) MAX. BUILT-UP BACK PRESSURE OF 120 PSIG
SUPPLIER TO COMPLETE FORM BY FURNISHING INFORMATION FOR BLANK SPACES
6) BLOWDOWN RING ADJUSTMENT TO BE FOR LIQUID RELIEF

SHEET 1 OF 2 REV. _____

4-436-S

REV. 12-9-68

7/11/80

CONOCO

ENGINEERING CENTER

PONCA CITY, OKLAHOMA

SPECIFICATION SHEET

RELIEF VALVES

A.F.E. NO. ____
DATE 6-12-80 W. O. NO. ____
MADE BY MJH INQ. NO. ____
APP'D BY ____ REQ. NO. ____
B. M. NO. ____ P. O. NO. ____

PLANT OKLAHOMA CITY PVC PROJECT REACTOR RELIEF CONTAINMENT - BLOWDOWN DRUM

	GENERAL								
1	ITEM NO. & TAG		PSU-7						
2	RELIEVES EQUIPMENT NO.		NF-2						
3	MANUFACTURER		FARRIS (1)						
4	MODEL NO.		26DA22						
5									
	SERVICE CONDITIONS								
6	FLUID		AMS						
7	STATE		LIQUID						
8	REQUIRED CAPACITY		4830						
9	MOL. WT.	SP. GR.	118	0.91					
10	VISCOSITY								
11	COMPRESSIBILITY FACTOR AT RELIEF		0.47						
12	DESIGN PRESS. OF EQUIPMENT PSIG		400						
13	PRESS PSIG OPERATING	RELIEVING	300	400					
14	TEMP °F FLOWING	RELIEVING	70	725					
15	BACK PRESSURE		0						
16	DIFFERENTIAL SET PRESSURE PSIG		400						
17	ACCUMULATION %		0						
18	BLOW DOWN %								
19									
	BASIS OF SELECTION								
20	CODE REQUIREMENT								
21	FIRE ~~EXPOSED~~ AREA WETTED, FT²		17.2						
22	FIRE INSULATION THICKNESS		NONE						
23	OTHER BASIS								
24									
	DESIGN DETAILS								
25	DESIGN TYPE		STANDARD						
26	SEAT TYPE								
27	BONNET (OPEN OR CLOSED)								
28	INLET SIZE, RATING, FACING		1" 300# RF						
29	OUTLET SIZE, RATING, FACING		2" 150# RF						
30	CALCULATED AREA IN²		.096						
31	ORIFICE LETTER	ACTUAL AREA	D	0.110					
	MATERIALS								
32	BODY	BONNET	CS	CS					
33	SEAT & DISK								
34	GUIDE & RING								
35	SPRING		TUNGSTEN STEEL						
36	BELLOWS								
	ACCESSORIES								
37	LIFTING LEVER (PLAIN OR PACKED)								
38	GAG								
39	CODE STAMP								
40	CAP (SCREWED OR BOLTED)								
41	OTHER								

NOTES: 1.) OR COMPANY APPROVED EQUAL

MANUFACTURER SHALL VERIFY SELECTION OF ORIFICE SIZE AND MATERIALS.
VALVES SHALL MEET DIMENSION REQUIREMENTS OF API RP-526.
VALVES SHALL MEET TEST REQUIREMENTS OF API RP-527.

7/11/80

SUPPLIER TO COMPLETE FORM BY FURNISHING INFORMATION FOR BLANK SPACES

SHEET 2 OF 2 REV. ____

4-436-S

REV. 12-9-69

VAB.0001100029

RUPTURE DISC SPECIFICATIONS

REACTOR RELIEF CONTAINMENT--BLOWDOWN DRUM

OKLAHOMA CITY PVC PLANT

Item No.	RD-1(2)	RD-2 thru RD-4(2)(1)	RD-7(2)
Location	NF-1	NF-1	NF-2
Line Size, In	8	8	1
Rupture Disc Size, In	8	8	1
Manufacturer	BS&B	BS&B	BS&B
Type	S-90(3)(4)	S-90(3)(4)	S-90(3)(4)
Set Conditions			
Pressure, psig	215	225	400
Temperature, °F	178	182	725
Operating Conditions			
Pressure, psig	FV-140	FV-140	300
Temperature, °F	60-225	60-225	70
Disc Material	Nickel	Nickel	Nickel
Flange Material			
Inlet	SS	SS	SS
Outlet	SS	SS	SS
Flange Rating	300-Lb RF	300-Lb RF	300-Lb RF

(1) One required for 18,000-gallon drum. Three required for 30,000-gallon drum.
(2) Rupture disc to be furnished with 2 1/2" pressure gauge. Gauge is to include stainless steel excess flow check valve. The pressure gauge is to have a second needle that stays at the maximum pressure seen.
(3) Reverse buckling.
(4) To be equipped with BS&B type SRB-7RS safety head assemblies.

MJH-lkm
7/11/80

CONOCO

ENGINEERING CENTER

PONCA CITY, OKLAHOMA

SPECIFICATION SHEET

A.F.E. NO.
DATE 6-12-80 W.O. NO.
MADE BY MJH INQ. NO.
APP'D BY WVA REQ. NO.
H.M. NO. P.O. NO.

PLANT OKLAHOMA CITY PVC PLANT PROJECT REACTOR RELIEF CONTAINMENT - BLOWDOWN DRUM

ITEM NO.
SERVICE SW-4

LOCATION : BOARD

TYPE : HAND OPERATED ON-OFF SWITCH

TO BE INTERLOCKED WITH CV-4, CV-5, CV-6, CV-7 AND SW-5A THROUGH SW-5F. SPECIFICATIONS TO BE DETERMINED

7/11/80

SHEET ____ OF ____ REV

F-270-9A

CONOCO

ENGINEERING CENTER

PONCA CITY, OKLAHOMA

SPECIFICATION SHEET

A.F.E. NO. _____
DATE 6-12-80 W.O. NO _____
MADE BY MJH INQ. NO _____
APP'D BY _____ REQ. NO. _____
B.M. NO _____ P.O. NO _____

PLANT OKLAHOMA CITY PUC PLANT PROJECT REACTOR RELIEF CONTAINMENT-BLOWDOWN DRUM

ITEM NO.
SERVICE SW-5A THROUGH SW-5F 6 REQUIRED

LOCATION : BOARD

TYPE : HAND OPERATED ON-OFF SWITCH

TO BE INTERLOCKED WITH REACTOR DUMP VALVE AND WATER CHARGE VALVE TO ALLOW REACTOR DUMP TO BLOWDOWN DRUM.
SPECIFICATION TO BE DETERMINED.

7/11/80

SHEET _____ OF _____ REV _____

F-270-9A

PIPING SCHEDULE

REACTOR RELIEF CONTAINMENT--BLOWDOWN DRUM

OKLAHOMA CITY PVC PLANT

The piping schedule conforms to the CED standard line designation. This system denotes line size, service, line number, insulation requirements, and piping specification as follows:

Sample Line Designation

3-SL-350-H-A2-3

A2	Piping Specification
H	Insulation Requirement
350	Line Number
SL	Service
3	Nominal Line Size, Inches

Sample Piping Specification

A2-3

A2	Third Specification of A2 Group
A	Piping Material
2	Nominal Pressure Classification

Service Designation Used

Designation	Service
SL	Low Pressure Steam (51 to 150 psig)
XO	Sodium Hydroxide Solution
WH	Cooling Water Return
WC	Cooling Water Supply
HM	Miscellaneous Hydrocarbons
WP	Process Water
PS	Slurry
WU	Utility Water
AB	Breathing Air
CL	Low Pressure Condensate (Up to 150 psig)

Insulation Requirement

H	Hot Service
S	Steam Traced and Insulated
N	No Insulation Required

Piping Schedule
Page 2

Service Designation Used (Continued)

Nominal Pressure Rating	Service
A	150-Pound Class
B	300-Pound Class
M	125-Pound Class
N	250-Pound Class

Piping Material	
2	Carbon Steel
13	304 or 304L Stainless Steel
16	316L Stainless Steel

MJH-lkm
7/11/80

PROCESS PIPING SCHEDULE
PROCESS ENGINEERING DEPARTMENT

Date 6-12-80 Made By MJH
Project REACTOR RELIEF CONTAINMENT-BLOWDOWN
Plant OKLAHOMA CITY PVC PLANT

7/11/80

Line Designation	Service From	Service To	V L S	Flow Rate Lb/Hr ~~(Not BPSD)~~	Normal °F	Normal PSIG	At T and P Lb/CF (Sp Gr)	At T and P Visc Cp	Press Drop PSI/100'	Velocity Ft/Sec	Remarks
4-HM-1-S-A2-1	RECOVERY HEADER	NF-1	V								
3-WP-2-S-A2-3	HM-4	NF-1	L								
1-HM-3-N-A2-1	AMS HOLDING TANK	NF-1	L								
10-HM-4-S-A13-1	D306 CHARGE WATER LINE	NF-1	V L S								
1-WP-5-S-A2-3	PS-9	EPA SYSTEM WATER STRIPPERS	L								
4-PS-6-H-A13-5	NG-1	REACTOR DUMP HEADER	L S								
2-HM-7-N-B2-1	NF-2	NF-1	L								
2-HM-8-N-B2-1	NF-2	NF-1	L								
6-PS-9-S-A13-5	NF-1	NG-1	L S								
3-PS-10-H-A13-5	NG-1	NF-1	L S								
1-HM-11-S-A2-1	PS-6	EPA SYSTEM	L								
3/4-WU-12-N-A2-3	HPSW HEADER	NG-1 SEALS	L								
1-IN-13-N-B2-1	NITROGEN (PA-1)	NF-2	V								
3/4-WU-14-S-A16-1	NA-1	SEAL WATER SUPPLY HEADER	L								
3/4-WU-15-S-A2-3	NA-1	SEAL WATER RETURN HEADER	L								
3/4-WU-16-S-A16-1	NA-2	SEAL WATER SUPPLY HEADER	L								
3/4-WU-17-S-A2-3	NA-2	SEAL WATER RETURN HEADER	L								

.0001100035

WORK LIST

REACTOR RELIEF CONTAINMENT--BLOWDOWN DRUM

OKLAHOMA CITY PVC PLANT

1. Install new blowdown drum NF-1 and associated piping and instrumentation, as indicated on the P&I diagram, south of D-306. The existing road may need to be rerouted.

2. Tie in new line HM-1 to the existing recovery header near D-306. Install new CV-1 on the existing header.

3. Install new CV-6 and CV-7 on discharge of G-301/G-302 charge water pumps downstream of reactor rinse line tie-in.

4. Tie in new line HM-4 to the existing hot water charge line at D-306.

5. Tie in new line PS-6 to the existing slurry dump header between D-306 and the dump Sweco.

6. Tie in new line HM-11 to the existing EPA system outside V-20 building.

7. Tie in new line WP-5 to the existing two-inch line to the water strippers F-210/F-211 outside the V-20 building.

8. Tie in new line HM-3 to the existing one-inch line from the AMS holding tank, F-387, to the D-306 emergency AMS pot.

9. Tie in new line WU-12 to existing HPSW line at D-306.

10. Tie in new lines WU-15 and WU-17 to the existing 3/4-inch agitator seal water return line at D-306.

11. Tie in new lines WU-14 and WU-16 to the existing 1 1/2-inch agitator seal water supply line at D-306.

MJH:lkm
7/11/80

VAB.0001100037

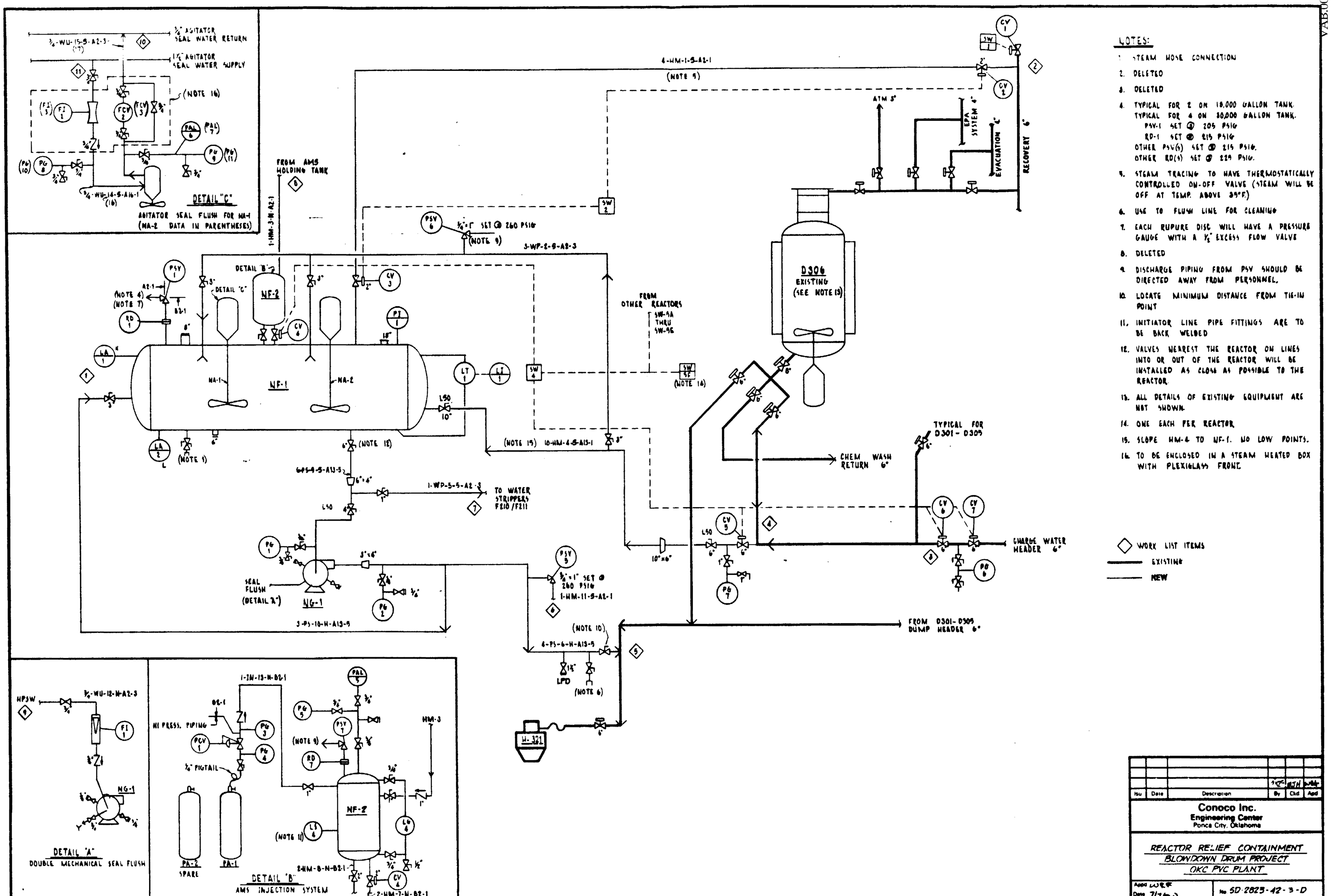

FORM 6-283-5.1

1.7.4 Capital Budgets
A 1981

1.10.1

A

Interoffice Communication

To : J. R. Pavao - Room 1934 - Houston

From : C. L. Miller

Date : April 7, 1981

Subject : 1981 CAPITAL BUDGET ITEMS

We do not plan to AFE item A-11, Water Preheater in the New Module ($19,000). With the installation of the V-11 Centrate Heat Recovery Project, AFE 9551, this item is no longer required.

We do not plan to AFE item A-3, Rigid Pelletized Production - Line V. Emphasis is being placed on developing a bottle compound instead of rigid pellets. Unless there are objections from the Business Area this project will not be AFE'd in 1981.

Item A-24, Replacement Gearbox for Farrel Mixer ($75,000) was approved in 1980; therefore, the project will not be AFE'd in 1981. A major portion of item A-12, Compliance with EPA VCM Standard, was approved in 1980. Thus $962,000 of this item will not be requested in 1981.

C L Miller

C. L. Miller

cjt

c: RAF, CRM, SJV

1981

Capital Budget

Aberdeen PVC Plant

Final Issue

conoco

conoco

A

Interoffice Communication

To R. E. Lehmkuhl

From R. A. Frohreich

Date August 8, 1980

Subject 1981 CAPITAL BUDGET

Attached is the second issue of the 1981 Capital Budget for the Aberdeen PVC Plant. This issue incorporates the comments from the review of the first issue.

The budget contains 25 projects with a construction capital requirement of $7,133,000 and a transportation capital requirement of $691,000. These projects have a combined DCF rate of return of 17.8%. The eleven revenue generating projects have a capital requirement of $3,449,000 with a DCF rate of return of 36.7%.

Two major compound projects are included. One provides for the modernization of Line I. The other provides the capabilities to produce rigid compound pellets on Line V. These projects will supply the added volume of flexible compounds and rigid compounds to meet the projected sales requirements.

Cost saving projects include a system to upgrade sifter overflow, conversion of the automatic bagging and palletizing system to resin use, a vacuum clean-up system for the dryer building, a slurry delumper, and a direct steam heated charge water preheater for the new reactor module.

Major projects in the safety category include replacement of the agitators in two of the old module reactors and new initiator charge pots for the reactors. The final phase of the ongoing plan to upgrade the firewater protection system is included.

Modernization projects will provide needed railroad trackage for VCM storage inside the plant and also a storage track paralleling the lead into the plant. Projects to provide the capability to produce 10-8 plasticizer and a project to upgrade the reactor recovery systems are also included.

A project in the pollution abatement category will reduce the probability of experiencing VCM relief valve discharges. This project should complete the major expenditures which have been required to meet the EPA VCM standard, barring a change in the regulation. Also, a project to upgrade the plant waste water treating facilities to meet the tougher discharge limits is included.

The plastics long range plan includes a new 25 MM pound per year compound line for start-up in 1984. The capital requirement for the new line is estimated to be $5,000,000 and the project will be included in the 1982 budget. The plan also calls for a 20 MM pound per year resin debottlenecking project in the 1982 budget. The capital requirement of this project is estimated to be $4,000,000.

EPA is currently developing effluent guidelines for control of priority (toxic) pollutants for the chemical industry. The effect on plastics manufacturers is unknown at this time, but will likely require going one step beyond the current treatment. The Clean Water Act requires these improvements be operational by the end of 1984. Although speculative at this time, a $2,000,000 project to meet the new requirements will likely be required in the 1983 budget.

R. A. Frohreich

R. A. Frohreich

jf

Attachments
DISTRIBUTION: R. W. Gerwig/G. Husen - Stamford
J. D. Burns - Houston
W. C. Kolar - Houston
R. E. Lehmkuhl - Houston
P. E. Markey - Houston
J. McCleskey/J. R. Friday - Houston
J. J. Hall - Houston
B. D. Ratliff - Houston
D. E. Michels - Houston
H. R. Flammer - Houston
E. L. Kieschnick - Houston
C. L. Sanderson - Houston
J. Friend - Oklahoma City

ABERDEEN DISTRIBUTION: CLM, CRM, JRM, AHS, RDJ, TBD, SJV, VEM, JAD, RAD(2)

CONOCO CHEMICALS

1981 CAPITAL BUDGET

ABERDEEN PVC PLANT

($000)

		CAPITAL	
		CONSTRUCTION	TRANSPORTATION
Plant Expansion and Modernization			
A-1	Compound Line I Modernization	1,800	292
A-2	Recovery System Revisions	385	61
A-3	Rigid Pelletized Compound Production-Line V	236	-
A-4	10-8 Plasticizer Production	210	338
A-5	New Railroad Storage Track	350	-
A-6	New VCM Railspur	185	-
	Subtotal	3,166	691
Cost Savings			
A-7	Sifter Overflow Reclaim System	226	-
A-8	Automatic Resin Bagging	101	-
A-9	Vacuum Clean-Up System for Dryer Buildings	77	-
A-10	Slurry Delumper	35	-
A-11	Water Preheater in New Module (Energy)	19	-
	Subtotal	458	-
Pollution Abatement			
A-12	Compliance With EPA VCM Standard (Air)	1,454	-
A-13	Waste Water Treatment Revision (Water)	560	-
A-14	Plasticizer Spill Containment (Water)	50	-
A-15	Groundwater Monitoring (Solid)	30	-
	Subtotal	2,094	-

8/8/80

CONOCO CHEMICALS

1981 CAPITAL BUDGET

ABERDEEN PVC PLANT

($000)

		CAPITAL	
		CONSTRUCTION	TRANSPORTATION
Safety and Health			
A-16	Reactor Agitator Replacement	310	-
A-17	Vinyl Initiator Charge Pots	165	-
A-18	Fire Protection Improvements - Phase IV	160	-
A-19	Safety Equipment and Projects	106	-
A-20	Normal Kill Solution Addition System	76	-
A-21	Plasticizer Initiator Handling System	38	-
	Subtotal	855	-
Miscellaneous			
A-22	Miscellaneous Projects Under $10,000	340	-
A-23	Capability to Receive Oklahoma City Pond Resin	105	-
A-24	Replacement Gearbox for Farrel Mixer	73	-
A-25	Laboratory Equipment	42	-
	Subtotal	560	-
	GRAND TOTAL	7,133	691

8/8/80

1981 CAPITAL BUDGET

Aberdeen PVC Plant

Overall Economic Bases

1. Rated Production Capacity as of January 1, 1981

	MM Lbs./Yr.
Resin	335
Compound	65
Dry Blend	70
Plasticizer	25

2. Gross margins for the various products (selling price less variable costs not including utilities) as supplied by the Business Area are as follows:

	Gross Margin ¢/Lb.		
Year	Resin	Rigid Compound Pellets	10-8 Plasticizer
1981	6.7	11.0	4.2
1982	7.4	11.6	4.4
1983	8.1	12.1	4.6
1984	8.9	12 7	4.4
1985	9.9	13.4	4.0
1986	10.9	14.0	4.1
1987	11.9	14.7	4.3
1988	13.1	15.5	4.5
1989	14.3	16.2	4.7
1990	15.6	17.1	4.9
1991	17.1	18.8	5.1

3. Utility Costs

Year	Electricity ¢/KWH	Natural Gas $/MCF	Steam $/M#
1981	3.74	3.15	4.32
1982	4.12	3.47	4.76
1983	4.53	3.74	5.13
1984	4.98	4.03	5.53
1985	5.48	5.41	7.42
1986	6.03	5.84	8.01
1987	6.63	6.83	9.36
1988	7.30	7.37 59	10.10
1989	8.03	7.96	10.91
1990	8.83	8.40 44	11.52
1991	9.72	9.07 67	12.43
1992	10.69	9.77	
1993	11.76	10.50	

8/8/80

3. Cont.

a. Electrical costs are based on the present price of 3.12¢/KWH with a 20% increase October 1, 1980, and a 10% per year increase thereafter per the Aberdeen Light and Water Department.

b. Natural gas costs are based on the present price of $2.51/MCF. Escalation estimate is per W. H. Higgins of the Gas Activities Department of North American Production Division. The estimated costs includes an allowance of 5% of the natural gas cost to cover the expected surcharge based on No. 6 high sulfur fuel oil.

c. Steam costs are based on the natural gas estimate.

4. Railcar Revenues

	$/Year/Car		
Service	Resin	10-8 Plasticizer	Compound
Year			
1981	2200	4200	2800
1982	2400	4600	3100
1983	2600	5100	3400
1984	2900	5600	3700
1985	3200	6200	4100
1986	3500	6800	4500
1987	3900	7600	5000
1988	4300	8400	5500
1989	4800	9200	6000
1990	5300	10200	6600
1991	5800	11300	7300

Railcar requirements, revenues and escalation as provided by Chemicals Supply and Transportation are based on the following 1980 experience.

	Load Size	Turnaround, Days	Miles Per Trip	Revenue Per Loaded Mile,$
Resin	170,000 Lb.	46	1030	0.23
10-8 Plasticizer	20,000 gal.	46	1407	0.31
Compound	170,000 Lb.	26	846	0.23

8/8/80

5. Utility Requirements are as follows:

	Resin	Rigid Pellets	10-8 Plasticizer	Compound
Electricity, KWH/Lb.	0.123	0.217	0.032	0.223
Natural Gas, CF/Lb.	0.75	-	0.028	-
Steam, Lb./Lb. Product	0.66	-	1.12	0.28

6. Budget preparation per D. Michels 10C dated June 5, 1980.

8/8/80

VAB.0001100048

1981 CAPITAL BUDGET

CASH FLOW SUMMARY - PROJECT YEAR

ABERDEEN PVC PLANT

($000)

PROJECT YEAR	-2	-1	1	2	3	4	5	6	7	8	9	10
Projects With Revenues												
A-1	(450.0)	(1350.0)	428.3	660.5	719.3	705.0	688.1	671.8	636.8	610.1	614.5	1047.8
A-2	-	(385.0)	95.5	109.5	115.4	115.7	117.2	118.2	117.0	118.4	127.6	178.1
A-3	-	(236.0)	51.3	82.9	145.7	181.6	191.7	196.4	200.0	204.2	214.2	295.0
A-4	-	(210.0)	47.2	64.5	87.3	107.0	105.8	104.6	97.3	94.8	95.5	156.7
A-7	-	(226.0)	241.3	245.6	257.9	273.7	291.0	310.0	328.6	350.1	378.1	419.7
A-8	-	(101.0)	55.7	53.4	13.8	12.7	11.7	10.7	8.8	7.3	8.0	13.7
A-9	-	(77.0)	36.0	33.8	34.0	35.1	36.4	37.8	38.7	40.2	43.4	50.8
A-10	-	(35.0)	10.2	11.7	12.7	12.9	13.3	13.7	14.0	14.5	15.7	21.3
A-11	-	(19.0)	9.4	6.9	6.8	8.3	8.6	9.6	9.9	10.3	10.8	12.6
A-14	-	(50.0)	33.5	34.4	34.6	35.3	36.1	37.0	37.4	38.2	40.0	44.4
A-16	-	(310.0)	57.5	65.0	69.7	69.0	69.1	69.1	67.1	66.6	72.8	114.4
Subtotal	(450.0)	(2999.0)	1065.9	1368.2	1497.2	1556.3	1569.0	1578.9	1555.6	1554.7	1620.6	2354.5
DCF Return							36.7%					
Projects Without Revenues												
A-5	-	(350.0)	44.8	25.2	15.8	9.5	3.2	(3.2)	(13.0)	(21.4)	(23.1)	(7.4)
A-6	-	(185.0)	23.7	13.3	8.3	5.0	1.7	(1.7)	(6.8)	(11.3)	(12.2)	(3.9)
A-12	-	(1454.0)	186.1	104.7	65.4	39.3	13.1	(13.1)	(53.8)	(88.7)	(96.0)	(30.5)
A-13	-	(560.0)	68.4	36.8	21.5	11.2	0.7	(10.0)	(26.2)	(40.2)	(43.4)	(18.9)
A-15	-	(30.0)	3.8	2.2	1.4	0.8	0.3	(0.3)	(1.1)	(1.8)	(2.0)	(0.6)
A-17	-	(165.0)	21.1	11.9	7.4	4.5	1.5	(1.5)	(6.1)	(10.1)	(10.9)	(3.5)
A-18	-	(160.0)	20.5	11.5	7.2	4.3	1.4	(1.4)	(5.9)	(9.8)	(10.6)	(3.4)
A-19	-	(106.0)	12.4	6.4	3.4	2.4	(0.6)	(2.9)	(5.9)	(8.7)	(9.4)	(4.9)
A-20	-	(76.0)	9.7	5.5	3.4	2.1	0.7	(0.7)	(2.8)	(4.6)	(5.0)	(1.6)
A-21	-	(38.0)	4.9	2.7	1.7	1.0	0.3	(0.3)	(1.4)	(2.3)	(2.5)	(0.8)
A-22	-	(340.0)	43.5	24.5	15.3	9.2	3.1	(3.1)	(12.6)	(20.7)	(22.4)	(7.1)
A-23	-	(105.0)	13.4	7.6	4.7	2.8	0.9	(0.9)	(3.9)	(6.4)	(6.9)	(2.2)
A-24	-	(73.0)	9.3	5.3	3.3	2.0	0.7	(0.7)	(2.7)	(4.5)	(4.8)	(1.5)
A-25	-	(42.0)	5.4	3.0	1.9	1.1	0.4	(0.4)	(1.6)	(2.6)	(2.8)	(0.9)
Subtotal		(3684.0)	467.0	260.6	160.7	95.2	27.4	(40.2)	(143.8)	(233.1)	(252.0)	(87.2)
DCF Return							0.0%					
TOTAL	(450.0)	(6683.0)	1532.9	1628.8	1657.9	1651.5	1596.4	1538.7	1411.8	1321.6	1368.6	2267.3
DCF RETURN							17.7%					

8/8/80

1981 CAPITAL BUDGET

CASH FLOW SUMMARY - CALENDAR YEAR

ABERDEEN PVC PLANT
($000)

Calendar Year	1981	1982	1983	1984	1985	1986	1987	1988	1989	1990	1991	1992
Projects With Revenues												
A-1	(450.0)	(1350.0)	428.3	660.5	719.3	705.0	688.1	671.8	636.8	610.1	614.5	1047.8
A-2	(385.0)	95.5	109.5	115.4	115.7	117.2	118.2	117.0	118.4	127.6	178.1	-
A-3	(236.0)	51.3	82.9	145.7	181.6	191.7	196.4	200.0	204.2	214.2	295.0	-
A-4	(52.5)	(133.9)	55.9	75.9	97.2	106.4	105.2	101.1	96.1	95.2	126.1	78.4
A-7	(113.0)	68.0	244.5	254.8	269.8	286.5	305.3	324.0	344.7	371.1	407.3	104.9
A-8	(50.5)	(8.7)	54.0	23.7	13.0	12.0	11.0	9.3	7.7	7.8	12.3	3.4
A-9	(77.0)	36.0	33.8	34.0	35.1	36.4	37.8	38.7	40.2	43.4	50.8	-
A-10	(35.0)	10.2	11.7	12.7	12.9	13.3	13.7	14.0	14.5	15.7	21.3	-
A-11	(16.6)	8.8	6.9	7.2	8.4	8.9	9.7	10.0	10.4	11.3	9.5	-
A-14	(25.0)	0.1	34.2	34.6	35.1	35.9	36.8	37.3	38.0	39.6	43.4	11.1
A-16	(77.5)	(203.8)	61.3	67.4	69.4	69.1	69.1	68.1	66.9	69.7	93.6	57.2
Subtotal	(1518.1)	(1426.5)	1123.0	1431.9	1557.5	1582.4	1591.3	1591.3	1577.9	1605.7	1853.9	1302.8
DCF Return						38.6%						
Projects Without Revenues												
A-5	(338.8)	39.9	22.9	14.2	7.9	1.6	(5.7)	(15.1)	(21.8)	(19.2)	(5.6)	-
A-6	(173.1)	18.5	10.8	6.7	3.4	0.0	(4.3)	(9.1)	(11.8)	(8.1)	(2.0)	-
A-12	(218.1)	(1189.4)	165.8	94.9	58.9	32.8	6.6	(23.3)	(62.5)	(90.5)	(79.6)	(22.9)
A-13	(560.0)	68.4	36.8	21.5	11.2	0.7	(10.0)	(26.2)	(40.2)	(43.4)	(18.9)	-
A-15	(28.1)	3.0	1.8	1.1	0.6	0.0	(0.7)	(1.5)	(1.9)	(1.3)	(0.3)	-
A-17	(159.7)	18.8	10.8	6.7	3.8	0.8	(2.7)	(7.1)	(10.3)	(9.1)	(2.6)	-
A-18	(24.0)	(130.9)	18.3	10.4	6.5	3.6	0.7	(2.5)	(6.9)	(10.0)	(8.8)	(2.6)
A-19	(26.5)	(73.3)	9.4	4.9	2.9	0.9	(1.8)	(4.4)	(7.3)	(9.1)	(7.2)	(2.5)
A-20	(73.6)	8.7	5.0	3.1	1.8	0.4	(1.2)	(3.3)	(4.7)	(4.2)	(1.2)	-
A-21	(19.0)	(15.3)	3.3	2.0	1.2	0.5	(0.2)	(1.1)	(2.1)	(2.5)	(1.2)	(0.2)
A-22	(340.0)	43.5	24.5	15.3	9.2	3.1	(3.1)	(12.6)	(20.7)	(22.4)	(7.1)	-
A-23	(105.0)	13.4	7.6	4.7	2.8	0.9	(0.9)	(3.9)	(6.4)	(6.9)	(2.2)	-
A-24	(70.7)	8.3	4.8	3.0	1.7	0.4	(1.2)	(3.2)	(4.6)	(4.0)	(1.1)	-
A-25	(40.6)	4.8	2.7	1.7	0.9	0.2	(0.7)	(1.9)	(2.7)	(2.3)	(0.7)	-
Subtotal	(2177.2)	(1181.6)	324.5	190.2	112.8	45.9	(25.2)	(115.2)	(203.9)	(233.0)	(138.5)	(28.2)
DCF Return						0.0%						
TOTAL	(3695.3)	(2608.1)	1447.5	1622.1	1670.3	1628.3	1566.1	1476.1	1374.0	1372.7	1715.4	1274.6
DCF RETURN						17.8%						

8/8/80

VAB.0001100049

VAB.0001100050

1981 CAPITAL BUDGET

ABERDEEN PVC PLANT

CAPITAL EXPENDITURE SCHEDULE

($000)

	1981 Budget	Expenditures 1980	1981 By Quarters 1	2	3	4	Total	1982
Pre-1980 and 1980 Carry-Over								
Plant Expansion and Modernization								
Reactor Inert Vent System	-	26	61	-	-	-	61	-
Plant Dryer Debottlenecking	-	40	40	-	-	-	40	-
PVC Resin Expansion	-	2,500	3,000	4,000	2,000	489	9,489	-
Compound Line III Debottlenecking		50	100	100	250	250	700	344
Modifications to Make Profile Dry Blend	-	-	50	100	50	-	200	-
Spare VCM Charge Headers	-	-	40	50	-	-	90	-
Calcium Stearate Addition System	-	20	40	14	10	-	64	-
Subtotal		2,636	3,331	4,264	2,310	739	10,644	344
Product Improvement								
Facilities For Multigrade Resin	-	400	400	70	-	-	470	-
Compound Fines and Streamer Removal	-	-	30	30	15	20	95	-
Subtotal	-	400	430	100	15	20	565	-
Cost Savings								
Air Compressor	-	224	65	-	-	-	65	-
Centrate Rinse Water System	-	-	50	120	100	30	300	-
Boiler Economizers	-	120	20	-	-	-	20	-
Subtotal	-	344	135	120	100	30	385	-
Pollution Abatement								
Diking Sphere & Storage Area	-	120	50	-	-	-	50	-
Water Stripping (Air)	-	70	200	300	200	100	800	-
Resin Reclaim System (Solid)	-	-	50	100	200	200	550	227
Spare Incinerator (Air)	-	50	200	200	200	-	600	-
Reactor Opening Loss Instrument	-	-	-	50	50	60	160	-
Subtotal	-	240	500	650	650	360	2,160	277

8/8/80

1981 CAPITAL BUDGET

ABERDEEN PVC PLANT

CAPITAL EXPENDITURE SCHEDULE
($000)

	1981 Budget	Expenditures 1980	1981 By Quarters 1	2	3	4	Total	1982
Pre-1980 and 1980 Carry-Over (Cont.)								
Safety and Health								
Fire Protection Improvements - Phase II	-	200	200	90	-	-	290	-
Reactor Agitator Replacement	-	-	-	200	100	89	389	-
Fire Protection Improvements - Phase III	-	60	100	100	17	-	217	-
Fixed Point Monitor Data Computer	-	50	64	-	-	-	64	-
Subtotal	-	310	364	390	117	89	960	-
Miscellaneous								
Miscellaneous Projects Under $10,000	-	280	90	-	-	-	90	-
Replacement of Hot Water Charge Tank	-	100	60		-	-	60	-
Subtotal	-	380	150	-	-	-	150	-
TOTAL CARRY-OVER	-	4,310	4,910	5,524	3,192	1,238	14,864	621

8/8/80

VAB.0001100051

VAB.0001100052

1981 CAPITAL BUDGET

ABERDEEN PVC PLANT

CAPITAL EXPENDITURE SCHEDULE

($000)

1981 Capital Budget	1981 Budget	Expenditures						
			1981 By Quarters					
		1980	1	2	3	4	Total	1982
Plant Expansion and Modernization								
A-1 Compound Line I Modernization	1,800	-	-	-	-	-	-	1,800
A-2 Recovery System Revisions	385	-	-	-	100	100	200	185
A-3 Rigid Pelletized Compound Production-Line V	236	-	-	-	-	-	-	236
A-4 10-8 Plasticizer Production	210	-	-	-	-	-	-	210
A-5 New Railroad Storage Track	350	-	-	-	200	150	350	-
A-6 New VCM Railspur	185	-	-	-	100	85	185	-
Cost Savings								
A-7 Sifter Overflow Reclaim System	226	-	-	-	-	50	50	176
A-8 Automatic Resin Bagging	101	-	-	-	-	50	50	51
A-9 Vacuum Clean-Up System for Dryer Buildings	77	-	-	-	-	50	50	27
A-10 Slurry Delumper	35	-	-	-	-	-	-	35
A-11 Water Preheater in New Module (Energy)	19	-	-	-	5	14	19	-
Pollution Abatement								
A-12 Compliance with EPA VCM Standard	1,454	-	-	-	100	300	400	1,054
A-13 Waste Water Treatment Revision	560	-	-	-	200	200	400	160
A-14 Plasticizer Spill Containment	50	-	-	-	-	-	-	50
A-15 Ground Water Monitoring	30	-	-	-	30	-	30	-
Safety and Health								
A-16 Reactor Agitator Replacement	310	-	-	-	-	-	-	310
A-17 Vinyl Initiator Charge Pots	165	-	-	-	100	65	165	-
A-18 Fire Protection Improvements, Phase IV	160	-	-	-	-	-	-	160
A-19 Safety Equipment and Projects	106	-	-	-	-	50	50	56
A-20 Normal Kill Solution Addition System	76	-	-	-	-	50	50	26
A-21 Plasticizer Initiator Handling System	38	-	-	-	-	-	-	38

8/8/80

1981 CAPITAL BUDGET

ABERDEEN PVC PLANT

CAPITAL EXPENDITURE SCHEDULE
($000)

1981 Capital Budget	1981 Budget	Expenditures 1980	1981 By Quarters 1	2	3	4	Total	1982
Miscellaneous								
A-22 Miscellaneous Projects Under $10,000	340	-	50	80	80	80	290	50
A-23 Capability to Receive Oklahoma City Resin	105	-	-	-	-	50	50	55
A-24 Replacement Gearbox for Farrel Mixer	73	-	-	-	50	23	73	-
A-25 Laboratory Equipment	42	-	-	-	7	35	42	-
Subtotal 1981 Budget	7,133	-	50	80	972	1,352	2,454	4,679
TOTAL EXPENDITURES	-	4,310	4,960	5,604	4,164	2,590	17,318	5,300

8/8/80

VAB.0001100053

1,52

Ollo Project 1981 Budget

Vol				Line V AFE Flexible Manpower	1.52 X's Fox Rem rate 25.8 vs 17 Rig	3 Rigid Manpower		Credit to Project	5	6	7 3,000,000 .02
~~3~~	0	~~1981~~ 1	1981	6.13	9.33	11.6	1982	2.27			
~~8~~	3	2		6.44	9.77	12.1		2.33			$60,000
~~15~~	8	3		6.76	10.26	12.7		2.44			
~~17~~	15	4		7.10	10.77	13.4		2.63			
	17	5		7.45	11.31	14.0		2.69			
		6		7.82	11.88	14.7		2.90			
		7		8.21	12.47	15.5		3.03			
		8		8.62	13.09	16.2		3.11			
		9		9.06	13.75	17.1		3.35			
		90		9.51	14.44	17.8		3.46			
		91									

Costs: Charge only cost associated with rigid operations vs flexible.

Volume - Do not count any other projects in economics. Leave volume zero. Leave flexible as project settings project.

don't need any more labor except for boiling

VAB.0001100054