MASTER COPY

THE PROPER HANDLING OF AROCLORS AND THEIR MIXTURES IN THE ELECTRICAL INDUSTRY

Monsanto Chemical Co.
Organic Div. Sales Dept.
800 N. Lindbergh Blvd.
St. Louis 66, Mo.

P. G. BENIGNUS
Revised
January 1960

0263127

TOWOLDMON0028581

INDEX

Introduction - Page 1-2	The Proper Handling Of Aroclors And Their Mixtures In The Electrical Industry
Chapter 1 - Page 3-12	Procedure For Unloading Tankcars Of Aroclors And Aroclor Mixtures
Page 3	(A) Description of the Cars
Page 4	(B) Procedure for Unloading the Cars
Page 12	(C) Drum Packaging
Chapter 2 - Page 13-19	Storage Tanks
Page 13	(A) General Description
Page 17	(B) Detailed Description
Chapter 3 - Page 20-21A	Gasketing and Pump Packing
Page 20	(A) Suggested Types Of Packing and Gasketing Materials
Page 21	(B) Gaskets For Askarel Capacitors and Transformers
Chapter 4 - Page 22-25	Sampling Methods
Page 22	(A) The ASTM Standard Method
Page 23	(B) Monsanto Methods
Page 25	(C) Drum Sampling
Chapter 5 - Page 26-28	Laboratory Analysis and Procedure
Page 26	(A) For Treating Aroclors and Their Mixtures with Earth
Chapter 6 - Page 29-61	Test Procedures
Page 29	(A) General Information
Page 31	(B) Detailed Instruction and Testing Methods
Page 31	1. Procedure for Cleaning Electrodes
Page 32	2. Dielectric Constant and Power Factor
Page 38	3. Dielectric Strength

TOWOLDMON0028582

	Page 44	4. Resistivity
	Page 47	5. Corrosion and Chemical Stability
	Page 49	6. Inorganic Chlorides
	Page 51	7. Acid Number
	Page 52	8. Moisture
	Page 55	9. Hydrolysis Stability Test for Aroclor
	Page 59	10. Thermal Stability Method for Aroclors
Chapter 7 -	Page 62-73	Typical Properties
	Page 64	Aroclor 1232
	Page 65	Aroclor 1242
	Page 66	Aroclor 1248
	Page 67	Aroclor 1254
	Page 68	Aroclor 1260
	Page 69	Pyranol 1481
	Page 70	Pyranol 1488
	Page 71	Pyranol 1467
	Page 72	Pyranol 1470
	Page 73	Inerteen PPO
Chapter 8 -	Page 74-76	Quality Requirements of Aroclors Prior to Use in the Electrical Industry
	Page 74	Quality as Supplied to the Electrical Industry
		Typical Electrical Quality of Aroclors Used in the Industry
	Page 74	Capacitor Impregnation
	Page 75	Transformer Filling
Chapter 9 -	Page 77-79	Earth Refinement of Aroclors to Arrive at the Desired Electrical Qualities
	Page 77	Earth Treatment in the Laboratory Preparatory to Analysis
	Page 77	Earth Treatment by the Plant Manufacturing the Askarel
	Page 78	Earth Refinement by the User Capacitor Manufacturers Transformer Manufacturers
	Page 79	The Effect of Earth Refinement on Removal of Tin Tetraphenyl Scavengers from Transformer Askarel

TOWOLDMON0028583

Chapter 10 -	Page 80-93	Contamination
	Page 80	Avoidance of Contaminating Askarel Capacitors
	Page 83	Avoidance of Contaminating Askarel Transformers
Chapter 11 -	Page 94-97	Reworking Contaminated Transformer Askarel
	Page 94	Normal Conditions
	Page 95	Arced Conditions
Chapter 12 -	Page 98-100	Dermatology and Toxicology
	Page 98	Skin Exposure
	Page 99	Exposure to Vapors
	Page 100	Vapors from a Severely Arced Askarel Transformer

Attachments:
Drawing No. 31-20847, The Tank Car
Drawing No. 31-20848, Dome Detail
Drawing No. 90-8170-5, The Horizontal Storage Tank
Drawing No. D-13362, The Vertical Storage Tank
Drawing No. 90-8248, The Breather
Drawing No. 90-8278, The Varec Gauge
Drawing No. 90-8178, The Unloading Platform

TOWOLDMON0028584

THE PROPER HANDLING OF AROCLORS* AND THEIR MIXTURES IN THE ELECTRICAL INDUSTRY

INTRODUCTION

Monsanto's Aroclors*, especially the chlorinated biphenyls including types 1016, 1242, and ~~1248~~, 1254, ~~and 1260~~, used alone or in combination with chlorinated benzenes, are commonly used dielectric materials of the askarel[1] class.

Askarel is a generic name referring to liquid dielectrics derived from halogenated aromatic hydrocarbons possessing excellent chemical and dielectric stability and fire-resistance over the temperature ranges and operating conditions required of transformers and capacitors in the electrical industry.

The properties of Aroclors and their mixtures, used as dielectrics are described in detail in Chapter 7 entitled, "Typical Properties". These dielectrics are manufactured under very carefully controlled conditions in order to meet the strict and exacting electrical requirements and properties.

The electrical industry's use of these fluids has been largely in accordance with the General Electric Company's patents and developments.

---

*Aroclors - Monsanto's chlorinated biphenyls and chlorinated polyphenyls, Registered U.S. Patent Office.

[1]F. M. Clark, "Electrical Insulation", Chem. Engg. News 25, 2977 (1947).

0263131

TOWOLDMON0028585

Resulting from the wide use of these materials in the industry, trade names have been established to identify them by different manufacturers of electrical equipment. Listed alphabetically the trade names include, "Chlorextol," Allis Chalmers; "Diaclor," Sangamo Electric; "Dykanol," Cornell Dubilier; "Elemex," Line Materials; "Hyvol," Aerovox; "Inerteen," Westinghouse Electric; "Noflamol," Wagner Electric; and Pyranol," General Electric Company.

The purpose of this bulletin is to assist the industry with the proper and safe handling of these dielectric materials in their operations.

0263132

TOWOLDMON0028586

CHAPTER 1

PROCEDURE FOR UNLOADING TANKCARS OF AROCLORS AND AROCLOR MIXTURES

A. Description of the Cars

Aroclor and mixtures of Aroclors with chlorinated benzenes are shipped by Monsanto in two types of insulated tankcars-both of which are either aluminum lined or zinc-tin metallized. One type of car has heating coils inside of the tank and these are in direct contact with the product. The other, a more widely used type of car, is a double-shell tank with heating coils between the inner and outer shells. The steam coil connections are at the bottom of the car. Both types of tankcars are tested for 60 pounds pressure and their steam coils are tested for 200 pounds gauge pressure.

The cars are top-unloaded by displacement with dry air containing 10 mg. H_2O/cu. ft. maximum.

There are two or three connections on the tankcar dome depending on the type of car. Where three connections exist, one is a two inch diameter unloading line which extends to the bottom of the car, the second is a one inch diameter air inlet connection and the third is a two inch diameter pressure safety vent, which is a thin lead disc adjusted to release any pressure in excess of 60 pounds gauge. This safety vent is hooded for protection against dust, dirt or accidental bumping.

Where only two connections exist on the dome, one is the two inch diameter unloading line and the other is the safety vent. On these cars, it is necessary to remove the safety vent and introduce the displacement air through that connection.

0263133

TOWOLDMON0028587

* * * *

While the tankcar drawing gives much detail, we have been asked about the following points not given in the drawing:

1. The distance from the rail track to the top of the dome of the cars is variable. It is 13 feet and 4 inches for the 7,000 gallon cars and ranges from 11 feet to 14 feet for the 8,000 gallon cars.

2. The steam connections are located under the center of the cars.

3. The steam pipe connection is usually a two inch pipe, but on some cars the pipe size is 1-1/4 inches.

4. American Standard taper pipe threads are used.

* * * *

0263134

TOWOLDMON0028588

Drawing No. 31-20848 shows in detail the dome of a tankcar with three connections. "A" is the two inch unloading line which extends to a small sump at the bottom of the car. "B" is the one inch air inlet connection. "C" is the hooded safety vent. The car dome cover with fitted bolts is shown in the center. It is fitted with an aluminum envelope Goetze gasket or a series 900 Garlock Asbestos gasket. This drawing also shows a bottom opening in the car. This can be opened only from the inside of the car and its purpose is for cleaning operations. It has no use at all in unloading the car.

Drawing No. 31-20847 shows the overall dimensions of the 8,000 gallon Aroclor tankcar.

B. Procedure for Unloading the Cars

The car should be spotted at an unloading dock similar to the one shown by Drawing No. 9C-8178. The car must be level and the brakes set properly. "STOP - TANKCAR CONNECTED" signs should be placed fore and aft the car to warn switching crews.

If it is raning or snowing or the humidity is extremely high, it is not advisable to open the car. In case the car must be sampled and opened during bad weather, a canvas canopy must be placed over the dome of the car. It is preferable to unload the cars under roof or inside the factory. Unless it is absolutely necessary because of following described situations the dome cover should not be opened until ready for sampling. The dome cover is sealed with a standard railroad wire and seal, and Monsanto should be notified if this seal is found broken upon receipt of the car.

0263135

TOWOLDMON0028589

The first step in unloading is to inspect the dome and clean around the dome cover to remove all loose dirt, water or snow. Wiping rags and a brush should be used to clean before the dome cover and connections are opened.

Then, the screwed hood over the air-inlet valve should be removed and this valve opened fully and left open while heating the car. A Weston or metal encased thermometer should be inserted through this air-inlet valve opening and the temperature of the interior of the car determined.

If the car temperature is below the caution temperature shown in the following Table 1, it will be necessary to take the special step of inserting a "hair-pin" heating coil through the dome of the car to preclude rupturing the tankcar seams during the heating period.

TABLE I

Product	ASTM Pour Point °C.	Temperature °C. Below which Caution Must Be Used in Heating
~~Aroclor 1260~~	~~+ 30~~	~~+ 40~~
Aroclor 1254	+ 10	+ 20
~~Aroclor 1248~~	~~- 7~~	~~+ 5~~
Aroclor 1242	- 19	- 10
Inerteen ~~PP0~~ 10/30	-20 Pre-heating is not required*	-10
~~Pyranol 1467~~	-19 ~~Pre-heating is not required*~~	
~~Pyranol 1470~~	~~Pre-heating is not required*~~	
Pyranol ~~1481~~ A13 838-3	Pre-heating is not required*	

*Except if the material has cooled below -10°C. and crystals of scavenger have separated. Then, the material should be heated to 70°C. (158°F.) until complete solution has been accomplished.

0263136

TOWOLDMON0028590

If the dome of the car is to be opened for the pre-heating operation, it is necessary that it be covered with a clean canvas. Extreme care must be taken to avoid getting dirt or moisture into the car.

It is due to the relatively high viscosity of some of the Aroclors at low temperatures that it becomes necessary to form a column of molten material from top to bottom of the car, in the center, to prevent hydraulic pressure build-up which may rupture the tank shell if there is too rapid localized heating when employing the main steam coils.

When such pre-heating is required, a satisfactory vent hole can be made by inserting a "hair-pin" coil (1/2 inch diameter brass, galvanized, or stainless steel pipe) into the open dome of the car and introducing steam through the coil until there is a column of fluid Aroclor from top to bottom.

After the vent hole is melted through the material to the bottom of the car, the "hair-pin" coil should be removed and the dome cover replaced and bolted.

Steam is then introduced into the main coils. It is recommended that the steam pressure be limited to 100 pounds gauge pressure, particularly when the coils are in direct contact with the Aroclor. The steam coil outlet should be trapped or throttled with a valve.

It will require eight to twenty hours to bring the material to pumping temperature - depending upon weather conditions. It is essential that the air inlet valve be open during the heating period in order to vent the tank.

TOWOLDMON0028591

Some calculations have been made to indicate the heat requirements for an Aroclor car. Data for an 8,000 gallon car of Aroclor 1254 are:

Specific Gravity = 1.5

Specific Heat = 0.26 Btu/lb./°F.

Heat requirement for heating Aroclor from 30°C. (86°F.) to 110°C. (230°F.) is:

8000 x 1.5 x 8.33 x 0.26 x (230-86) = 3,774,000 Btu.

For heating from 30°C. (86°F.) to only 75°C. (167°F.), the heat required is 2,110,000 Btu.

A nine horse power boiler operating at 80 psig produces 263 lbs./hr. of steam with no reused condensate. Returning condensate at 200°F. will increase the steam output to 296 lbs./hr. at 80 psig.

In the first case, heating to 110°C., the over-all heat transfer co-efficient is assumed to be too low to utilize the 100% capacity of the boiler. A value of 1500 for UA with an average Δ T of 133°F. indicates that the useable steam is 202,000 Btu/hr. or 226 lbs./hr. steam at 80 psig.

In the second case the Δ T is lower and the entire output of the boiler is useable. Table II sums up the approximate time calculated to heat Aroclor 1254 in an 8,000 gallon car.

0263138

TOWOLDMON0028592

TABLE II

Nine HP Boiler

	Lbs. Steam/Hr.	30-110°C.	30-75°C.
100% cap. (no reused condensate)	263	--	9 hrs.
75% cap. (no reused condensate)	--	18 hrs. (86% cap)	12 hrs.
100% cap. (condensate @ 200°F.)	296	--	8 hrs.
75% cap. (condensate @ 200°F.)	--	18 hrs. (76% cap)	11 hrs.

Calculations on a five horse power boiler give heating times of the following order:

Five HP Boiler

	Lbs. Steam/Hr.	30-110°C.	30-75°C.
100% cap. (no reused condensate)	146	28 hrs.	16 hrs.
100% cap. (condensate @ 200°F.)	164	25 hrs.	14 hrs.

Aroclor cars can be heated by steam (80-100 psig) to the proper handling temperatures in a reasonable time by using a boiler source capable of producing 200,000 to 300,000 Btu/hr. The times given here are approximate and will act as a guide until experience shows the exact time for this operation.

02631139

TOWOLDMON0028593

The proper handling temperature for the various fluids is given in the following Table III, which indicates corresponding viscosity values:

TABLE III

Product	Handling and Pumping Temperature °C.	Approximate Viscosity, S.U.S.
~~Aroclor 1260~~	~~95 - 130~~	~~100 - 43~~
Aroclor 1254	75 - 110	100 - 42
~~Aroclor 1248~~	~~50 - 85~~	~~100 - 40~~
Aroclor 1242	35 - 75	100 - 40
Aroclor 1016	30 - 75	100 - 40
~~Pyranol 1481~~	30 - 75	100 - 40
Pyranol A13838-3	20 - 55	
~~Pyranol 1467~~	~~20 - 55*~~	~~100 - 40~~
~~Pyranol 1470~~	~~15 - 45*~~	~~100 - 40~~
Inerteen ~~PPO~~ 70/30	~~20 - 55~~ 30 - 75	100 - 40
Inerteen 100-42	35 - 70	100 - 40

*If any of the scavenger is out of solution, then the material must be heated at 70°C. (158°F.) until it has dissolved.

Selection of pumping temperatures for any dielectric not shown on this list or which may be developed in the future should be based on a viscosity of about 100 Saybolt Universal Seconds for average pumping and about 40 S.U.S. for fast pumping.

When the material has been heated to pumping temperature, a one-half inch diameter pipe "cross" arrangement containing a pressure gauge, air inlet, pressure relief valve to relieve at 30 Psig, and vent connections, should be connected to the dome air inlet pipe. Then the unloading line should be connected.

Rust-free and clean galvanized piping or aluminum or stainless steel pipe should be used for the unloading line.

0263140

TOWOLDMON0028594

(At this point a sample is taken as described in Chapter 4,) Dry* air is then introduced into the tankcar and pressure built up to 15 pounds gauge. The two inch valve cock on the stand pipe is opened and the discharge pipe observed to be sure the liquid is being unloaded. To protect the seams in the tankcar, the pressure must not exceed 30 pounds. The car will begin to unload at about 12 pounds pressure.

When the car is empty, the air pressure will drop off rapidly and air will blow out of the vent on the receiving tank. The air flow may be stopped at this point and the tankcar pressure released through the vent valve on the "cross" arrangement. After inspecting the car to be sure that it has been completely unloaded, all connections and dome cover should be closed tightly. It is essential that the empty tankcar be sealed immediately after the car is unloaded in order to keep the car filled with dry air during return shipment.

*It is essential that the displacement air used for unloading be dried thoroughly by some dehumidfying unit such as soda lime, activated alumina or similar dehydrating agent drying unit. It may be necessary to recharge the dehumidifying unit each time that a car is unloaded. For unloading a tankcar of Aroclor within three hours, 15 standard cubic feet a minute of air at 15 pounds per square inch gauge pressure and a -100°F. dew point should be supplied. If the dry air unit is to be used only for unloading tankcars, a small single tower dryer unit containing a self-contained reactivating heater is suggested. Two manufacturers of air dryers of this type are: C. M. Kemp Mfg. Co., 405 E. Oliver Street, Baltimore 2, Maryland and Pittsburgh Lectrodryer Corporation, Foot of 32nd Street, Pittsburgh, Pennsylvania.

0263141

TOWOLDMON0028595

As a final step, it is desired that a standard railroad wire seal be inserted through the slotted bolts of the car fittings. Steam should be released from the car coils and all condensate removed from the coils by blowing with air with the steam trap by-passed. All connections must be replaced as received. Adequate care should be taken in preparing and sealing the car for return shipment.

Unloading with dry air as described is the preferred and recommended procedure because it is done with the car dome closed which avoids contamination.

Dry nitrogen may be used instead of dry air. If nitrogen is used it is essential to notify us (the supplier) so that we can take required safety precautions relative to replacing the nitrogen with air in the returned car prior to sending our men into it for cleaning.

If the car is unloaded by pumping out of the top, which required opening the dome, it is most desirable that the car be set inside of a building. If this cannot be done, then a canopy or roof should be provided over the car dome, and the unloading should be done when the weather is clear.

A clean centrifugal pump with minimum capacity of 40 gpm. is suggested. It will be necessary to prime the pump and only clean askarel should be used to do this. Another method for priming the pump is to use a Penberthy steam jet, No. 22A available from Penberthy Injector Co., 1242 Holden Ave., Detroit 2, Michigan. (Further pump detail is given on page 17).

0263142

TOWOLDMON0028596

C. Drum Packaging

Drum packaging is made with new and carefully inspected 16-gauge 55-gallon drums. These steel drums are lined with a specially selected baked phenolic coating. An example is the Series 71 clear epoxy phenolic lining offered by the ~~National Enameling and Stamping Company, Chicago, Illinois~~ Bradley Vrooman Division of Whittaker Coatings, Chicago, Illinois. Contents of the drums should not be heated by direct application of flame or strip heaters. Radiant heat from steam coils or hot air in a heated room is to be preferred. The screw plug in the drum head is fitted with a metal cap as a safe guard against tampering.

The drums should be stored indoors. If outdoor storage cannot be avoided, the drums should be placed in a horizontal position and covered with a tarpaulin.

0263143

TOWOLDMON0028597

CHAPTER 2

STORAGE TANKS

A. General Description

The storage tanks should be a minimum of 10,000 gallons and preferably 12,000 to 15,000 gallons capacity to accommodate the normal 8,000 gallon tankcars.

It is preferable to locate the tanks above ground where they are easily accessible for any changes or repairs. Underground location presents difficulty in this respect.

Especially in cold climates, it is preferable to locate the tanks inside of a building. The tanks should be located conveniently with reference to the tankcar unloading facilities and the area where the dielectric is used.

Although Aroclors are non-corrosive to metals, corrosion or rusting of iron and steel equipment (by oxidation) may occur resulting in contamination of the products. The resistance of Aroclors to materials of construction is given in Monsanto Technical Bulletin, OP-115, entitled, "The Aroclors", Page 6.

Stainless steel tanks are very satisfactory but relatively expensive. Stainless steel pipe is relatively difficult to fabricate and it is difficult to make tight leak-proof connections.

Storage tanks may be of steel construction if properly metallized with zinc-tin or aluminum on the interior surfaces coming in contact with the Aroclors.

TOWOLDMON0028598

The metallizing should be done according to the following procedure:

1. Clean an area of the surface by sand blasting, or a similar method to give a perfectly clean and roughened surface. The area cleaned should not be greater than can be completely metallized within a few hours after cleaning.

2. If zinc-tin metallizing is used, a coating of zinc 0.005 inches thick should be sprayed on to the cleaned surface. This is followed immediately by a coating of tin 0.007 inches thick.

3. Aluminum metallized surfacing should be about 0.01 inch thick.

The detailed procedure for metallizing and cleaning is outlined as follows:

a) Sand blast. b) Coat with iron, 0.005 inches thick. (The purpose of this coating is to provide a rougher and better bond for the finish coat of aluminum or the zinc-tin combination.) c) Apply the selected finish coat. d) Fill the tank with tap water and warm it with steam. (If an open steam line is used, do not allow the steam to impinge directly onto the metallized surface of the tank.) e) Drain the tank. f) Fill with cold water and drain. g) Wipe dry and clean with clean diaper cloth or other fabric relatively free of lint. h) Heat the tank to at least 100°C. (212°F.) to expell moist air. It would be beneficial to heat the tank, allow it to cool and pull dry air through it using a dehumidfying breather in the air line, heat again etc., until the tank is full of comparatively dry air. i) Spray about 100 gallons of new, electrical grade Aroclor (not high in viscosity) or electrical grade trichlorobenzene onto the inner walls of the tank, washing the walls thoroughly (avoid breathing any fumes). j) Attach the circulating pump, the lines used, and

0263145
TOWOLDMON0028599

the filter press fitted with dry paper and circulate the fluid through the system and the tank. Install new dry filter paper several times in the press during this drying and cleaning operation. Discard the dielectric fluid used for cleaning.

k) Partially fill the tank with new Aroclor dielectric and analyze it electrically and chemically to determine whether it meets specifications. If all tests are met, then fill the tank with the dielectric.

The tanks should be insulated using, preferably, glass foam beads as supplied by Dow-Corning or Libby-Owens-Ford. The suggested thickness of the glass insulation is one inch minimum to two inches maximum. The glass insulation may be covered with tar material commonly used for weather-proofing. Another type of insulation which may be used instead of the glass is 85% Magnesia-Wool which should be covered also with the weather-proofing tar. The advantage of the glass insulation is that it is not moisture sensitive as is the case with Magnesia-Wool.

If the storage tank is located outdoors, it is best that the insulation be covered with riveted or bolted tin sheeting painted with aluminum paint. This type of metal surface weathers well and is cleaned easily. All piping must be stainless, Aluminum or galvanized, ~~and~~ Screwed fittings must be back brazed to assure tightness. All handling pipe lines must be traced with steam lines and insulation applied over the two lines in order to keep the handling lines and the material up to the desired pumping temperature. Usually a one-fourth inch copper steam line running parallel with the handling line will suffice.

0263146

TOWOLDMON0028600

Under very severe conditions of low temperatures, it would be desirable to wind the steam line around the handling line about two turns to the foot.

The tanks must be provided with ample pressurized heating coil surface to supply sufficient heat to the material to bring it to the proper temperature for pumping and handling as indicated in Table III. Heating coils should be either metallized steel, or preferably steel coils which have been galvanized after fabrication. It is recommended that the steam pressure on all heating coils should not exceed 100 pounds per square inch gauge; lower pressures may be used where practicable. It is essential that all steam coils be completely free from even minute leaks since this will introduce water into the product.

The steam coils may be introduced as "hair-pin" coils through a manhole at the side and bottom of the tank, or as is most often done, inserted through the manhole at the top of the tank and then located near the bottom.

External heating coils located in the jacket of the tank may be used but this construction is more expensive and less efficient than the internal coils.

The storage tanks may be fitted with a stirrer, either through the top, side, or bottom of the tank and the propeller blade should be located near the bottom of the tank. However, insertion of a stirrer through the side offers possible source of a leak and since these materials are homogeneous, it is not essential to provide such agitation for the purpose of mixing.

0263147

TOWOLDMON0028601

Adequate circulation can also be accomplished by using a centrifugal type pump. Gear pumps or other equipment where wear or chipping of metal parts may introduce contamination should not be used. The pumps must be of the type designed to handle hot oil. All wetted pump parts should be either stainless steel or bronze. The centrifugal pumps must be provided with a deep stuffing box and proper packing used, as described in Chapter 3. As examples of pumps found completely satisfactory for this service, reference is made to Worthington Worthite pumps. Blackmer pumps, Dean Bros., Peerless and Dayton Dowd Type C pumps for handling hot oil.

Also, a very satisfactory arrangement for mixing or circulating and pumping the fluid from the storage tank is to use a vertical sump pump such as a Taber pump.

All storage tanks must be amply provided with a dehumidifying breather such as soda lime, activated alumina, etc., units. This is essential to prevent moist air from coming in contact with the dielectric. A moisture content above 35 ppm adversely affects the electrical resistivity of these products. Provision should be made to preclude possible leakage of the drier material back into the storage tank and the drier should be inspected periodically to make sure that it is open and not plugged. A suitable alternative to provide "moisture-free" storage would be a nitrogen blanketing system.

B. Detailed Description

Drawing No. 9C-8170 shows the detailed construction of a horizontal 15,000 gallon storage tank for Aroclor and its mixtures which has been found completely satisfactory.

0263148

TOWOLDMON0028602

The various nozzles on this tank are used as follows, considering them in order from left to right on the drawing:

3" nozzle	Inlet for recirculation
24" nozzle	For future agitator if required (not used)
3" nozzle	For soda lime or calcium chloride breather connection.
36" manhole	For inspection, etc. The float guage is located in the center of this manhole.
3" nozzle	Not used.
24" nozzle	For future agitator if required (not used)
3" nozzle	Not used.
3" nozzle	Filling inlet connection.
18" x 26" Oval nozzle	For sump pump
3" nozzle	For thermometer well (see detail)

The two 24" nozzles were originally installed for installation of agitators, if required. However, it has been found unnecessary to use agitators in the storage tanks, and these nozzles could be omitted.

It has been found that circulation of the fluid by the sump pump, and into the nozzle at the opposite end of the tank, for several hours gives satisfactory blending of the tank contents.

For pumping the dielectric from the storage tank, a Taber Pump Company all bronze 2-1/2" x 2" vertical sump pump with monel shaft has been found to be quite satisfactory for the application.

0263149

TOWOLDMON0028603

The liquid level gauge used in the storage must be gas-tight. The storage tanks are equipped with Vapor Recovery Systems Co.'s "Varec", gas-tight, automatic tank gauge as shown by drawing No. 9C-8278.

The storage tanks should be provided with an operating platform suitable to the customer's conditions of operation.

The dehumidifying units used as breathers on the storage tanks can be constructed as shown by Drawing No. 9C-8248. The upper portion of the chamber is charged with anhydrous soda lime or another drying agent. Periodic inspection of the drying agent will show the formation of a cake of damp material on top about 1 to 1-1/2 inches deep. This cake should be removed and fresh material recharged. Any suitable construction similar to that shown on Drawing No. 9C-8248 may be used for the breather units.

Drawing No. D-13362 shows design detail of a 15,000 gallon vertical storage tank. The vertical type tank would seem especially desirable when insufficient space is available to accomodate the horizontal type tank.

0763150

TOWOLDMON0028604

CHAPTER 3

GASKETING AND PUMP PACKING

Aroclors and their mixtures soften and swell natural rubber and many of the synthetic "rubber" materials. Such material not recommended for use include, Hycar P, Koroseal, Perbunan, Neoprene, etc. These materials are known sources of contamination.

SUGGESTED TYPES OF PACKING AND GASKETING MATERIALS INCLUDE:

1. For Welded Flanged Pipe Connections: Garlock Packing Co., No. 901 or No. 7021, 1/8 inch asbestos fiber sheet. A ring of thin aluminum drawn tightly at the flange connections may be used satisfactorily also.

2. For Pumps: Garlock No. 234, No. 431, and Cheveron No. 7050-C are satisfactory packings. Likewise, Durametallic's spiral asbestos fiber may be used. Johns-Manville and others have comparable packing materials.

3. For Valves: Garlock No. 117 braided packing or its equivalent is suggested.

4. Other Resistant Materials: It is indicated that duPont's Teflon, poly tetrafluoroethylene is not attacked by hot (130°C.) Aroclor and is to be recommended as a gasket material. Dow-Corning's Silastic, Silicone 180, is very resistant to Aroclor and is suggested for gasket purposes.

5. In some cases cork impregnated under pressure with Chrysler's Cycloweld 55-9 or Armstrong Cork Co.'s 1162-J and cured at 170°C. may be used as a gasket material. These are baked phenolic type coatings.

6. Pipe Thread Compounds: When necessary to use pipe thread compounds, the following should be satisfactory if care is taken to prevent the pipe compound from getting on the inside of the pipe.

   (a) Plastic Lead Seal - manufactured by Durametallic Corporation

   (b) Ordinary white lead

0263151

TOWOLDMON0028605

Usually it is not necessary to use pipe thread compounds since all screwed pipe fittings should be sealed by back brazing.

7. All new lines and fittings should be cleaned thoroughly by steaming (for two hours) and dried with air or heat.

GASKETS FOR ASKAREL CAPACITORS AND TRANSFORMERS

1. For small capacitors requiring ring seals on the terminals, properly selected Silastic (silicone) tubing is cut to make the ring gasket.

2. The most effective and trouble free seal for transformer lids or covers is to weld the cover onto the transformer shell. To remove the welded cover a weld cutting tool or bar is used.

3. Cork - Nitrile rubber composition gaskets are sometimes used to combine the desired flow limiting property of cork with the resiliency of nitrile rubber. Only fine grained cork should be used in making this composition gasket. Special gasket cementing compounds such as GE's No. 1276 or No. 880 are used to coat the gaskets to further seal them against the transformer fluid and to accomplish firm bonding to the metal surface.

4. Nitrile rubber gaskets are also used and require no adhesive to make a liquid-tight seal. Exposure of nitrile rubber gaskets to transformer askarel should be kept at a minimum and the gasket should not be compressed beyond 2/3 of the original thickness.

   After long time exposure to transformer askarel fluid or its vapor, nitrile rubber is measurably deteriorated. While gaskets made of silicone or Teflon are not attacked, these materials are relatively expensive for use in large sizes. Accordingly, for the most efficient performance it is suggested that welded covers be used on askarel transformers.

5. Instruments, such as temperature gauges, etc. may be attached to the transformer using flange connection to pipe located below the liquid level of the fluid in the transformer. Such flange connections are usually not large in diameter. Accordingly, it seems practical to use Teflon or Silastic gaskets to make these seals, especially since it is known that askarel can migrate thru cork or composition cork gaskets used under the liquid level.

0263152

TOWOLDMON0028606

Another satisfactory approach used is to machine the flange surfaces of this type connection. Then a Spiritallic gasket made of stainless steel ring with asbestos inter liner for resiliency can be used satisfactorily.

6. Screwed pipe fittings on askarel transformers require thorough cleaning of the threads to remove oil, grease and dirt. Then the threads are coated with a compound such as GE's No. 880 and then tightened.

TOWOLDMON0028607

CHAPTER 4

SAMPLING METHODS

1.) The ASTM Standard Method for sampling electrical insulating oils is described in ASTM Designation: D923-49. This describes glass and metal thiefs for sampling drums, cans, and tankcars. A specially designed thief or bomb for sampling tankcars is described, also. A very good instrument of this type is the stainless-steel Bacon Bomb Thief with which samples of the liquid can be drawn from any level of the tankcar.

The ASTM procedure describes sample containers, their cleaning and storage.

Under general precautions, the ASTM mentions that, "Samples of the fluid shall not be taken until the oil is at least as warm as the surrounding air, because cold oil may condense enough moisture from a humid atmosphere to affect seriously its insulation properties. (In the case of tankcar lots, on some occasions there may be no choice, as it may be necessary to procure samples from a tankcar when the temperature is not above the surrounding air. On such occasions, the temperatur of oil and air also the humidity if possible, should be noted in the report of test results.) It is undesirable to do any sampling when the relative humidity of the atmosphere exceeds 75 percent, and samples shall never be taken in the rain".

0263154

TOWOLDMON0028608

Several electrical manufacturers using Aroclor dielectrics, switch the tankcars directly into the plant building or under roof before sampling and unloading.

These precautions in handling are taken to avoid any contamination of the fluids which are manufactured under very strict specifications. For example, the specification for ionizable chlorides allows no detectable amount, (less than 0.10 parts per million). Moisture may not exceed 20 to 35 parts per million.

Tankcars are cleaned and prepared under close inspection before they are filled. When filled, and analysis shows the material in the car to be satisfactory, the car is then sealed with a standard railroad wire and seal inserted through the slots of the dome fittings.

Likewise, after the tankcars have been unloaded in the industry, it is requested that the dome fittings should be sealed with a railroad wire and seal.

2.) Monsanto Methods used for sampling tankcars differ somewhat from the ASTM procedure. The modified techniques are used because of their greater simplicity and they have been entirely satisfactory as employed over many years.

A sample is never taken when it is raining or snowing, or when there is any chance of contaminated atmosphere moving in the direction of the car. However, in case of an emergency during inclement weather, a canopy is placed over

TOWOLDMON0028609

the car dome before sampling.

A satisfactory sample bottle is a five pint, round amber glass, packer type container fitted with a 38 millimeter Bakelite screw cap with an aluminum or tin cup liner. Bottles of this description can be purchased from the Northwestern Bottle Company, 3144 North Broadway, St. Louis, Missouri according to their No. A-7253.

Only new bottles and caps are used. When a shipment of bottles is received, the bottles are capped immediately and stored in their receiving cartons. Prior to use, the exterior of the bottles is wiped with a clean cloth.

The simplest sampling device used is a clean stainless steel or aluminum dipper. However, this is not a generally preferred device because it permits sampling the car from the near surface, only.

The sampling device commonly used consists of a stainless steel tube, seven feet long with one end bent into a hook, to serve as a handle and on the other end there is a stainless steel bucket with a perforated bottom. This bucket is about 5-1/4 inches inside diameter and 6 inches deep to hold the five pint bottle.

This bottle is held firmly by a stainless steel collar made to slide along the shaft of the sampling device. This collar has a clamp attachment for fixing it tightly into place where desired around the neck of the bottle.

When a car is to be sampled, a new sample bottle is clamped firmly in the bucket.

0263156

TOWOLDMON0028610

All dirt is brushed and wiped away from the car dome area using a clean rag.

The car dome is opened and the cap is then removed from the sample bottle.

The sampling device is inserted into the car so that the neck of the bottle is at least twelve to eighteen inches below the surface of the fluid. The sample taken is properly discarded as its purpose is to rinse the bottle. A portion of the sample is used to rinse the interior of the bottle cap.

This procedure is repeated until a minimum of three rinses has been made; each time the sample taken is not put back into the car. These rinses should be properly discarded.

Then the sample is taken and the cap of the bottle is screwed down tightly.

When the sample has been obtained, the car dome is replaced, immediately.

The exterior of the sample bottle is wiped with a clean cloth and when returned to the laboratory it is further cleaned with a cloth dampened with pure trichlorobenzene. If the sample is to be shipped, the cap is taped with Scotch Tape.

The sampling device is also cleaned with pure trichlorobenzene and is stored in a dust free, air conditioned room.

3.) Drum Sampling: A glass thief, thoroughly cleaned with pure trichlorobenzene and dried is used to sample drums.

0263157

TOWOLDMON0028611

CHAPTER 5

LABORATORY ANALYSIS AND PROCEDURE FOR TREATING AROCLORS AND THEIR MIXTURES WITH EARTH

A sample of the Aroclor or Aroclor mixture taken from the tankcar, or drums, as described in Chapter 4, is analyzed in the laboratory to determine its quality in accordance with the property values given in Chapter 7.

For capacitor use, usually the important properties tested are resistivity, power factor, chlorides, and moisture. For transformer use dielectric strength, resistivity, moisture and chlorides are the important properties.

If the sample is out of line with the shipping specifications, it is indicated that the sample has become contaminated. In this case, another sample is to be taken and the properties redetermined. If still out of specifications, the sample should be given treatment with earth.

Treatment of the dielectric with conditioned Attapulgus earth will bring the electrical properties to the maximum attainable values. While there is complete agreement on the benefits derived from treating with conditioned earth, there is difference of opinion on details of the method, arising from factors such as the following. No doubt, there are differences in the absorbent power of various types of diatomaceous earth with respect to removing moisture, impurities and additives such as stabilizers or scavengers from the dielectric

0263158

TOWOLDMON0028612

materials. The size of the earth particles, temperature and conditions of activation of the earth, the concentrations used and the temperature, the degree of agitation and time interval at which the dielectric is given earth treatment are all possible variables which are still being studied in various laboratories.

The method used by Monsanto for treating the fluid with activated earth in the laboratory is:

The absorbent is minus 200 mesh Attapulgus* earth activated just prior to use by heating in shallow trays for four hours at 400°C. (752°F.) or for at least twelve hours at 250°C. (482°F.).

At least one quart of the dielectric sample is placed into a clean two liter Pyrex beaker or three necked flask. The beaker or flask should be cleaned just prior to use in a manner similar to the procedure described in Chapter 6, Method No. 11,751, "Procedure for Cleaning of Electrodes, G.E. Cell and Accessories".

The flask or beaker is fitted with a glass or stainless steel agitator. Heat is applied using either a hot plate or a Glas-Col mantle and is controlled by a thermostat such as a Fenwal thermo switch with a stainless steel sheath.

About 0.1 to 0.2% of the activated earth, based on the weight of the liquid is added.

*Attapulgus Division, Minerals & Chemicals Corp. of America, 210 West Washington Square, Philadelphia 5, Pennsylvania

0263159

TOWOLDMON0028613

The more viscous dielectrics such as Aroclors 1248 and 1254 are heated at about 70° to 80°C. (158° - 176°F.) and the less viscous materials such as Aroclor 1242 and Pyranols 1481, 1467, and 1470 are heated at about 50° to 60°C. (122° to 140°F.).

After heating and stirring the sample for about four hours, it is filtered using a clean Pyrex glass suction flask and a Buchner funnel fitted with a Whatman No. 1 or No. 3 filter paper. This apparatus and the bottle into which the treated sample of dielectric is transferred should have been cleaned in a manner similar to the cleaning procedure described in Chapter 6.

The earth treated and "up-graded" sample is then ready for final analysis of its electrical properties.

0763160

TOWOLDMON0028614

CHAPTER 6

TEST PROCEDURES

A. General Information

The Monsanto test methods described here with the special equipment used are some of the control tests employed to maintain the quality of Aroclors for dielectric use. They are suggested as a guide for test work needed to indicate the quality of the dielectrics used in the manufacture of electrical goods.

The most significant electrical tests made on Aroclors for capacitors are:

1. Dielectric constant.
2. Power Factor.
3. Resistivity.

For transformer use the most significant electrical tests of Aroclor mixtures are:

1. Dielectric Strength
2. Resistivity.

Other than electrical tests, significant measurements of quality include, moisture, chlorides, thermal and chemical stability.

The following terms are defined:

0263161

Dielectric Constant:

The dielectric constant (sometimes called specific inductive capacity) of any substance is equal to the ratio of the capacitance of a condenser when that substance is used as the dielectric to the capacitance when there is a vacuum between the conductors (for all practical purposes air at ordinary pressures may be used instead of a vacuum).

TOWOLDMON0028615

Dielectric Strength:

Dielectric strength is the rupturing strength of an insulating material when subjected to voltage stress under specific conditions and expressed in kilovolts. Breakdown varies with the shape of the electrodes and does not increase directly in proportion to the thickness of the dielectric.

Power Factor:

The power factor of a dielectric is the ratio of the energy loss in the dielectric to the "apparent power" in the dielectric.

Resistivity:

Resistivity is electrical resistance offered to the passage of a steady current. The volume resistivity in ohms-centimeter of an oil is the ratio of the d-c potential gradient in volts per centimeter paralleling the current flow within the sample, to the current density in amperes per square centimeter at a given instant of time and under prescribed conditions. Volume resistivity is expressed in ohm-cm.

The analytical procedures described in detail include:

1. METHOD NO. 11,751, "PROCEDURE FOR CLEANING OF ELECTRODES, G.E. CELL AND ACCESSORIES."
2. METHOD NO. 11,608, "DIELECTRIC CONSTANT AND POWER FACTOR."
3. METHOD NO. 11,605, "DIELECTRIC STRENGTH."
4. METHOD NO. 11,607, "RESISTIVITY."
5. METHOD NO. 10,126, "CORROSION AND CHEMICAL STABILITY."
6. METHOD NO. 10,118, "INORGANIC CHLORIDES."
7. METHOD NO. 10,087, "ACID NUMBER."
8. METHOD (MODIFIED) NO. 10,620, "MOISTURE (WATER)."

0263162

TOWOLDMON0028616

9. Hydrolysis Stability Test.

10. Thermal Stability Test.

B. Detailed Instruction and Testing Methods.

1. METHOD NO. 11,751, "PROCEDURE FOR CLEANING OF ELECTRODES, G.E."

Cell and Accessories.

a. The Electrode Cleaning Procedure:

1) Place the electrodes in hot electrical grade Trichlorobenzene for ten minutes.

2) Wash with unheated TCB.

3) Rinse twice with methanol and twice with tap water.

4) Place the electrodes in hot 10% Tri Sodium Phosphate solution. Soak and heat for ten minutes.

5) Wash thoroughly with tap water.

CAUTION: After Step 5 -- DO NOT TOUCH THE ELECTRODES WITH HANDS!

6) Wash with distilled water twice.

7) Dry in drying oven for at least two hours at 120°C.

b. The G.E. Cell Cleaning:

1) Reclean the cell before use, when more than 8 hours have elapsed since the previous cleaning.

2) Follow the procedure for the electrodes starting at Step 4.

c. Cleaning of the Accessories:

1) Apply the same cleaning procedure as given for the electrodes (Steps 1 to 7) to prepare the glass spacer and beaker for next test.

2) Clean the thermometer in the same manner as the electrodes, except for Step 7.

3) Place the wet thermometer (after Step 6) directly in position in the temperature Heating Unit (Modified Fisher Isotemp Oven) and allow to dry.

0263163

TOWOLDMON0028617

2. METHOD NO. 11,608. "DIELECTRIC CONSTANT AND POWER FACTOR."

I. Apparatus

A. Oscilloscope: Heathkit Model O-6.

B. Constant Temperature Heating Unit: Fisher Isotemp oven. Model 13-245A, modified to include inter-wall connectors.

C. A. C. Generator: General Radio Type 1302-A

D. Amplifier and Null Detector: General Radio type 1231-B with type 1261-A power supply.

E. Capacitance Bridge: General Radio Co. Capacitance Bridge type 716-C.

F. Test cells: G. E. type, concentric cylinder electrodes Catalog #1,559,663. (G.E., Pittsfield, Mass. Transformer Lab.)

G. Class B driver transformer: This is used for 60 cycle measurements to excite the bridge directly from the domestic power line. It has 50 volts output with a 4800 ohm resistor in service.

H. Tuned Circuit Filters: General Radio Type 1231-P2 (400 and 1000 cycle) and 1231-P3 (60 cycle). These filters aid in obtaining a more accurate frequency for the measurements by removing harmonics, noise, hum, etc.

II. Adjustment of Controls on Electrical Appartus

A. On Panel No. 1 (Top Panel, Amplifier and Null Detector)

a. Turn the 4-way (main power) switch on the upper right hand side to the #3 position to determine the Dielectric Constant at 1000 cycles. Turn this switch to the #2 position for measurements at 60 cycles.

b. Allow the equipment to warm up 10 minutes.

c. Turn "GAIN CONTROL" to 6.

d. Depress "INPUT 0.03V." button.

B. On Panel No. 2 (Oscilloscope)

a. Turn "INTEN." to about the 12 o'clock position.

CAUTION: Do not allow a high intensity spot to remain stationary on the screen for any length of time.

0263164

TOWOLDMON0028618

b. Using "HOR. POSITION" and "VERT. POSITION" controls center the image on the screen.

c. Adjust "FOCUS" for sharp line.

d. Turn "FREQ. SELECTOR" to LOOKC.

e. Turn "FREQ. VERNIER" to 80.

f. Turn "VERTICAL GAIN" to 5.

g. Turn "VERTICAL INPUT" to "10 VOLT MAX.".

h. Turn "HORIZONTAL GAIN" to about 20.

i. Turn "SYNCHORONIZING" to $\pm$ 20.

j. Turn "SYN." to "EXT. SYN."

k. Turn "GEN." to "SWEEP GEN."

C. On Panel No. 3 (Capacitance Bridge)

a. Turn "RANGE SELECTOR" switch to "100 C" for 60 cycle measurements and to "1 KC" for 1000 cycle measurements.

b. Turn "METHOD SWITCH" to direct.

c. Turn "DISSIPATION FACTOR" selector switch to "0".

D. On Panel No. 4 (oscillator)

a. Disregard this panel for measurements at 60 cycles.

b. On 1000 cycle measurements, depress the No. 10 "MULTIPLY BY" button.

c. Set "FREQUENCY DIAL" to 100.

d. Turn "OUTPUT" dial so that pointer is at the end of the arrow.

e. Depress the "UNBAL. 5000 OHMS" button.

When all of the above adjustments are made, the electrical apparatus is ready for measurement of Dielectric Constant and Power Factor.

TOWOLDMON0028619

III. Determination of Constants for the Apparatus

1. Carefully assemble the cell which has been cleaned and dried within the last 8 hours. Refer to Method No. 11,751 for the procedure to use in cleaning the cells.

2. Place the cell assembly in the Fisher oven which has been adjusted to 25°C.

3. Connect the back wire inside the oven to the lead on the inner cylinder of the cell and the front wire to the lead on the outer cylinder of the cell.

4. Connect the cable from the capacitance bridge to the terminals on top of the oven so that the inner wire of the cable goes to the back terminal and the outside mesh casing of the cable (the ground) goes to the front terminal.

5. Remove the thermometer from the top of the oven before going on with the test. This is important.

6. Make all adjustments on the electrical apparatus as directed in Part I of this method.

7. Balance the bridge by rotating the "CAPACITANCE" and "DISSIPATION FACTOR" dials on Panel No. 3 until the wide vertical band on the oscilliscope is adjusted to a minimum width.

8. Record the sum of the readings on the "CAPACITANCE" dial and vernier and call this value A.

9. Remove the beaker containing the cell from the oven and fill it with C.P. benzene to a level 0.737 inches (ca. 3/4 inch) above the top of the concentric cylinders of the cell.

10. Adjust the temperature of the benzene to 25°C. while stirring with a thermometer.

11. Replace the cell in the oven (at 25°C.) and make the same electrical connections as in Steps 3 and 4. DO NOT interchange connections.

12. Balance the bridge again as in Step 7.

13. Record the sum of the readings on the "CAPACITANCE" dial and vernier and call this value B.

14. Calculate the cell constant by the following equation:

$$\text{Cell Constant, } K = \frac{B - A}{2.27 - 1.0}$$ (this is usually around 70 mmfd.)

0263166

TOWOLDMON0028620

15. Remove the cell from the oven and balance the bridge as in Step 7 with the "CAPACITANCE" and "DISSIPATION" "FACTOR" dials.

16. Record the sum of the readings on the "CAPACITANCE" dial and vernier and call this value F. (capacitance of connecting cable.)

17. Calculate the CELL LEAD CAPACITANCE by the following equation.

CELL LEAD CAPACITANCE, G = A - F - K (this is usually around 3 mmfd.)

WHERE:

A = CAPACITANCE OF ENTIRE SYSTEM IN AIR (SYSTEM CONSTANT)

G = CAPACITANCE OF THE CELL LEADS (CELL LEAD CONSTANT)

F = CAPACITANCE OF CABLE AND WIRES WHICH CONNECT THE CELL AND CELL LEADS TO THE BRIDGE. (CONNECTOR CONSTANT)

K = CAPACITANCE OF THE CELL ALONE (THE CELL CONSTANT)

Tabulate the system Constant (A), the Cell Lead Constant (G), the Connector Constant (F), and the Cell Constant (K) on a piece of stiff paper and post them near the instrument where they can be easily referred to for comparison and calculations.

These constants must be checked at least once every three months and in all cases where the Dielectric Constant and/or Power Factor are out of specification.

IV. Measurement of Dielectric Constant and Power Factor on Aroclors, Pyranols, Inerteens, and Tri-Tetrachlorobenzene Blends.

A. Test Run on Cell to Determine whether it is Clean and properly Aligned.

1. Carefully assemble a cell which has been cleaned and dried within the past 8 hours.

NOTE: Refer to method No. 11,751 for procedure to use in cleaning cells.

TOWOLDMON0028621

2. Adjust the oven control to hold at a temperature of 100°C. for all materials except Tri-Tetra Blends. If a Tri-Tetra blend is to be tested, adjust the oven to hold a temperature of 25°C.

3. Place the empty cell assembly in the oven and connect the back wire inside the oven to the lead on the inner cylinder of the cell, and connect the other (front) wire to the lead on the outer cylinder.

4. Connect the cables from the capacitance bridge to the terminals on top of the oven so that the inner wire of the cable goes to the back terminal and the outside metal casing (ground) goes to the front terminal.

5. Allow 15 minutes for the cell to reach temperature equilibrium inside the oven.

6. Remove the thermometer from the top of the oven before taking any measurements on the bridge. This is important.

7. Make all the adjustments on the electrical apparatus as directed in Part I of this method.

8. Balance the bridge by rotating the "CAPACITANCE" and "DISSIPATION FACTOR" dials on Panel No. 3 until the wide vertical band on the oscilloscope screen is adjusted to a minimum width.

9. Record the sum of the readings on the "CAPACITANCE" dial and vernier and compare this value with the SYSTEM CONSTANT determined in Part II of this method.

IMPORTANT: If the value obtained in Step 9 does not agree with the System Constant A (Part II) within 5 uuf, the cell must be re-cleaned, re-dried, re-assembled, and the test run for the System Constant must be repeated.

NOTE: Although the above test run must be made prior to each analysis, the value obtained in Step 9 is not to be used in calculations but is to be used only as a check on the cleanliness and alignment of the cell.

0263168

TOWOLDMON0028622

B. Procedure for Testing Materials

10. Remove the cell from the oven and fill the beaker with the material to be tested to a level 0.737 inches (ca 3/4 inch) above the cylinders of the cell.

11. Adjust the temperature of the sample to 100°C. (use hot plate) for all materials except Tri-Tetra blends. For Tri-Tetra blends, adjust the temperature of the sample to 25°C. using an ice-water bath if necessary.

NOTE: Stir sample continuously with a thermometer while adjusting the temperature.

12. Place the cell and sample in the oven and make the same connections from the cell to the bridge as in Steps 3 and 4. DO NOT interchange connections.

13. Allow 15 minutes for the cell to reach temperature equilibrium inside the oven.

14. Remove thermometer from the oven before taking a measurement. This is important.

15. Make the adjustment of controls on the electrical apparatus as directed in Part I of this method.

16. Balance the bridge by rotating the "CAPACITANCE" and "DISSIPATION FACTOR" dials on Panel No. 3 until the wide vertical band on the oscilloscope screen is adjusted to a minimum width.

17. Record the sum of the readings on the "CAPACITANCE" dial and vernier, and call this value X.

18. Record the sum of the readings on the "DISSIPATION FACTOR" dial and switch. Call this value D.

Calculations:

$$\text{Dielectric Constant} = \frac{X - F - G}{K}$$

Where:

X = Capacitance reading from Step 17.
F = Connector Constant (Determined in Part II)
G = Cell Lead Constant (Determined in Part II)
K = Cell Constant (Determined in Part II)

0263169

TOWOLDMON0028623

$$\% \text{ Power Factor} = \frac{f \times D}{f_o}$$

Where:

f = Test Frequency (60 cycles or 1000 cycles)
f_o = Frequency of "Range Selector" on Panel No.3
D = Dissipation Factor reading from Step 18.

NOTE: When D (dissipation factor) is less than 0.1, the dissipation and power factors differ by less than 0.0005. Therefore, for our measurements, power factors and dissipation factors are equal.

Precision: (Reference: General Radio Manual for Model 716-C Capacitance Bridge)

a. Capacitance readings are precise to ± 2 mmfd. x multiplier reading (± 0.2% of full scale for each range) when the dissipation factor is less than 0.01.

b. Dissipation Factor (Power Factor) readings are precise to ± 0.0005 or ± 2% of the dial reading whichever is larger, for values less than 0.1 for D (Dissipation Factor).

3. METHOD NO. 11,605, "DIELECTRIC STRENGTH."

a. Apparatus and General Information

The electrical equipment necessary to provide high voltage to permit the determination of dielectric strength of liquid dielectric at commercial power frequencies is basically quite simple.

The equipment assembled in the laboratory consists of a high voltage transformer of good design and with a current capacity of 2.43 KVA and with equipment for control of the voltage and a means of measuring the voltage and to provide safety for the operator.

TOWOLDMON0028624

It is enclosed in a steel gray crackle finished cabinet measuring 42" high, 22" wide, 17" deep and set on truck casters for easy mobility.

Protective equipment incorporated in this apparatus prevents the application of high voltage unless all safeguards are complied with. The door on rear of cabinet must be closed. The cover over the oil must be all the way down and the voltage control must be at O position. Failure to comply with these requirements will prevent any action when the red button is depressed.

The test cup: Transformers, Voltmeters, and Accessories

The askarel testing cup type No. 224809 supplied by General Electric Company is mounted on the top rear of the cabinet. It is protected by a heavy plastic cover, hinged at the rear for accessibility to the receptical.

It is equipped with safety contactor so placed that the circuit energizing the high voltage contactor cannot be completed unless the protective cover is completely lowered and in place. It is impossible for the operator or anyone else to touch the testing cup when high voltage is applied.

The High Voltage Transformer manufactured by the Kelly-Koett Manufacturing Co. is of the closed core, oil immersed, shell type design. Rate @ 81,000 volt @ 40 millampers. It was recovered from a used X-ray machine purchased quite inexpensively.

0763171

TOWOLDMON0028625

An auto transformer from the same X-ray machine is connected so as to limit the out-put voltage of the high voltage secondary to 50,000 volts.

The primary of the auto transformer is connected to the secondary of a 2-1/2 KVA powerstat variable auto transformer supplied by the Superior Electric Company.

Power to the powerstat is controlled by a 4 contact 30 amp. solenoid circuit breaker.

The voltmeter mounted on top near front edge is connected across the powerstat secondary and is calibrated to read directly in Kilovolts in the range of 0 - 50 K.V.

The overload circuit breaker consists of a small relay connected between one side of the high voltage transformer secondary center tap and ground. It is adjusted to break contact on a current drain of about 50 milliampers. The circuit for the coil of the solenoid circuit breaker is wired through the contacts of this relay.

0263172

TOWOLDMON0028626

Safety and Operating Controls

1) Door interlock switch located on rear door.

2) Test cup cover interlock switch.

3) Powerstat switch mounted on rear of unit arranged so that high voltage contactor cannot be closed unless powerstat is at zero position.

4) Main power switch on front panel.

5) Powerstat voltage control on front panel.

6) High voltage contactor push button on front panel (red).

7) Signal lamps mounted on top around voltmeter. Purpose and operation described in method of use.

b. Procedure

1) Ascertain that the temperature of the material under test is 25 (± 0.5)°C.

NOTE: Testing at other temperature is likely to give variable results which may be misleading.

2) Shake the sample container so as to thoroughly mix the askarel before filling the test cup.

NOTE: This operation is especially important with used Aroclor as the impurities may settle to the bottom and the test may be misleading.

3) Rinse the testing cup three times with small portions of the sample to be tested.

4) Immediately after final rinse, fill the cup to a height of not less than 20 mm. (0.787 in.) above the top of the electrodes.

5) Rock the cup a few times in order that any entrapped air may escape. Close cover over oil test cup.

6) Allow to stand 3 minutes. CAUTION: THIS IS IMPORTANT.

7. Turn main toggle switch on front panel to "ON" (or up) position. Both green and amber pilot lights on the top at either side of the voltmeter will now glow.

TOWOLDMON0028627

NOTE: The green signal light is connected across the 115 volt in-put and denotes that line voltage has been applied to operating control circuit.

Amber light is connected in series with sensitive switch located under high voltage contactors and connected to its armature. It indicates that high voltage contactor is in its rest position and away from contacts energizing auto transformer.

8) Turn voltage control (large knob on front) to extreme counter-clockwise position.

9) Depress red button on front. This energizes high voltage transformer and circuit breaker and is indicated by amber light going out and the red light directly over voltmeter will light.

10) Watch the voltmeter and, while holding the button "IN", turn the voltage control at such speed that will cause voltage as indicated on voltmeter to rise at a rate of 3 K.V. per second.

11) Note and Record the voltmeter reading at breakdown.

12) Repeat the test until two successive breakdowns occur on each of two fillings of the test cup which do not differ by more than 10%.

Report the average value of these two readings (Step 12) as the Dielectric Strength. If the limit of the instrument is reached before breakdown, report the Dielectric Strength as 50 K.V. at 25°C.

Cleaning of the test cup:

After the test is completed, drain the cup.

Flush the cup with benzene.

Then fill with Aroclor 1248 and let stand,

until the next analysis.

TOWOLDMON0028628

NOTE: An exception, when samples of oil from the plant are brought in for test, the cup must be thoroughly cleaned with benzene and carbon tetrachloride before and after running the test

The electrodes:

The testing cup has two electrodes. Both electrodes are movable and have twenty threads to the inch with index notches on both the electrodes and the lock nuts.

To set the Gap:

Arrange one of the electrodes and the lock nuts with the index marks in line. Move the other electrode until it comes in firm contact with the first electrode and lock it.

Now unscrew the electrode with the index marks in line (Step 1) two complete turns and lock it.

This will leave a gap of 0.1 inch between faces of the electrodes.

Cleaning of the electrodes and the test cup free of carbon coating:

The following ASTM method of cleaning shall be followed when it is apparent from visual inspection that the electrode discs of the cup are coated with carbon.

Wipe clean with dry calendered tissue paper the electrodes and the test cup.

TOWOLDMON0028629

CAUTION: It is important to avoid touching the electrodes with the finger or with portion of the tissue paper which has been in contact with hands. Rinse the electrodes and cup with dry lead-free gasoline, Stoddard Solvent (or dry, waterwhite Kerosene) until they are entirely clean. Care should be taken not to touch the electrodes or the inside of the cup after cleaning so as to avoid possible contamination.

4. METHOD NO. 11,607, "RESISTIVITY."

a. Apparatus:

General Radio Company Megohm Bridge Type 544-B.

This is a combination of Wheatstone bridge and vacuum tube voltmeter for indicating null. The direct measurement of resistance up to 1,000,000 megohms is made possible by the use of a vacuum tube detector which absorbs negligible amount of power.

The voltage applied to the unknown resistor is held approximately constant, regardless of the value of the unknown resistance. This condition is necessary to measure resistance properly.

The accuracy of the instrument in the range encountered in the measurement of Aroclor resistivity, 100 to 1000 megohm is $\pm$ 6%.

0263176

TOWOLDMON0028630

The instrument is equipped with a 115 volt AC power supply which supplies all operating voltages for the bridge indicating circuits and in addition supplies 500 V DC for application to the material under test. The instrument is completely enclosed in a waxed finish shielded oak cabinet measuring 8-1/2" wide, 22-1/2" long and 8" high.
Approximate weight--26 pounds.

Test Electrodes:

Two concentric nickel cylinders with feet, obtained from General Electric Company. The inner electrode has outside diameter of 2.8" and a height of 3.25" with area of 184 sq. cm. The outer electrode has an inside diameter of 3" and a height of 3.25" with area of 198 sq. cm. The distance between electrodes is, therefore, 0.1" or 0.254 cm.
By theory, electrode constant (K) area/length is 191/0.254 or 752 where average area is 191 sq. cm. Also K = 36 x 10" x C (farads with air as dielectric) or 11.29 x C (mmfd. with air as dielectric).

Glass Plate:

Pyrex about 3-1/2" diameter with concentric grooves to assist in spacing electrodes. Obtained from General Electric Company.

Heating Unit:

Assembled in the laboratory and is the same unit

0263177

TOWOLDMON0028631

described in Dielectric Constant Apparatus (see Method No. 11,608; Equipment).

b. Procedure:

1) Assemble the test cell. Place the recently cleaned (within the last 8 hours--see Method No. 11,751, Step 9) electrodes in an 800 ml. beaker.

2) Measure the capacitance of the test cell (C_c) according to Method No. 11,608 (Dielectric Constant and Power Factor measurements.)

3) Fill the cell assembly until the liquid level is 3/4 inch above the top of the electrodes.

4) Heat the assembly on the hot plate to 100 ($\pm$ 0.5)°C.

5) Place the assembly inside of the testing oven.

6) Attach top lead (+) on the megohm bridge to inner electrode.

7) Attach other lead to outer electrode.

8) Throw the three switches at the top of the megohm bridge to "ON" position.

9) Allow 10 minutes for assembly to reach temperature equilibrium inside the oven.

DANGER: Make sure control knob is in "CHECK" position. Otherwise, painful shock will result if leads are touched.

10) Bring the galvanometer pointer to zero by turning the "ZERO ADJUST" knob in the direction in which the pointer of the galvanometer should move.

11) Turn the control knob to "CHARGE" position for 30 seconds.

12) Turn the control knob to "OPERATE" position and return the galvanometer pointer to zero by adjustment of the "MULTIPLY BY" switch and the megohm dial.

13) Read after 30 seconds.

0263178

TOWOLDMON0028632

Calculation:

Resistivity* - Megohm dial reading (Step 12) x "Multiply By" reading (Step 11) x capacitance of cell (Step 2) in mmfd. x 11.29 x 0.001.

Report the result in units of 109 ohm-cm.

*Values of resistivity are qualified by designation of temperature and voltage. These are for this test, 100°C and 500 volts DC.

NOTE: It is important that the product under test, electrodes, and beaker be at uniform temperature for this determination. Temperature variations in different parts of the sample will cause the galvanometer zero to change constantly and give misleading results.

CAUTION: Inasmuch as measurements must be made at a potential of 500 volts DC a shock hazard exists in the handling of this appartus. With the control knob in the charge and operate position full voltage of the bridge (500 volts) is applied to the positive and low terminals and through the test leads to the electrodes. Do not attempt to handle the electrodes of the test leads unless the control knob is in the "CHECK" position. Possible penalty for failure to observe this precaution -- Painful Shock.

5. METHOD NO. 10,126 "CORROSION AND CHEMICAL STABILITY."

   a. Apparatus: G.E. Corrosion Apparatus consists of the following:

      1) A Corrosion Flask - It is a 300-ml. Pyrex flask

0263179

TOWOLDMON0028633

with a ground glass 24/40 joint equipped with a 12-inch straight tube as an air cooled condenser. The air-condenser is painted on the outside with aluminum.

2) The Corrosion Apparatus: A transite box 32" long x 8" wide x 5" deep. The top of the box represents a split transite board with 5 holes cut to fit the flasks.

The box is heated by two 500-watt, 15 volt G.E. Strip heaters with off-set terminals at one end (23.5" overall length).

The heating length of the heating element is covered by a copper strip 19-1/2" long x 4" wide x 1/4" thick.

The temperature is controlled by an automatic thermostat with temperature setting indicator.

b. Procedure:

1) Roll a rectangular (2" x 4") piece of aluminum foil so that it will pass through a ground glass 24/40 joint of the corrosion test flask.

CAUTION: Be careful that after rolling the specimen does not touch itself at any point.

2) Wash the aluminum foil (Step 1) scrupulously with acetone, distilled water, acetone, benzene, and chloride-free ether.

3) Then place the foil on a clean watch-glass and dry in an oven at 110°C. for 30 min. After cleaning handle the specimen with tongs or forceps only.

4) Weigh accurately on an analytical balance the specimen (Step 3) at room temperature.

5) Drop the weighed aluminum foil into the chloride-free corrosion flask of the "G.E. Corrosion Apparatus." Rinse out flask with sample and rinse end of condenser with sample.

6) Add 200 ml. of the product under test to the aluminum foil (Step 4 and 5).

7) Set the corrosion flask in the corrosion test apparatus.

TOWOLDMON0028634

8) Attach a 12-inch straight-tube air-cooled condenser, the outside of which is painted with aluminum.

9) Cover the exposed part of the flask with aluminum foil.

10) Heat the flask for 6 (± 0.1) hours at 210 (± 5)°C.

The temperature of the liquid in the test flask is measured indirectly using a thermometer inserted through a cork stopper and into similar liquid contained in an identical flask seated adjacent to the test flask on the heating chamber.

11) At the end of the heating period, detach condenser from the flask before removing it from the hot plate.

12) Remove the flask from the hot plate and cover all of the flask with aluminum foil (when the flask is not on the hot plate.)

13) Without removing the aluminum foil covering of the flask, analyze the product (Step 6) remaining in the corrosion apparatus for:

a) Appearance, Color, and Condition.
b) Inorganic (Free) Chlorides--Apply Method No.10,118
c) Acidity (Acid Number) - Follow Method No. 10,087

14) With a pair of clean, straight nichrome tongs, remove the aluminum foil specimen (Step 5), wash thoroughly, dry and weigh accurately on an analytical balance in the same manner as before (Steps 2, 3 and 4).

Report the corrosion as loss or gain in weight to the nearest 0.0001 g. and the Chemical Stability, as indicated by the analysis of the products "After Corrosion Test", in the same way as reported for the original (as received) material.

6. METHOD NO. 10,118, "INORGANIC CHLORIDES."

a. Preparation of Standards:

1) Make a primary standard of 100.0 ppm by weighing 0.1648 g. C.P. NaCl into a chloride-free 1 liter volumetric flask. Dilute to the mark and mix thoroughly. Make a 10.0 ppm standard by diluting 100 ml. of the primary standard to 1 liter, and mixing well. For every 0.1 ppm standard, dilute to 10 ml. of the 10 ppm standard to one liter and

0763181

TOWOLDMON0028635

mix well. A 0.1 ppm beam is considered the very faintest beam perceptible to the eye between 15-45 seconds after adding the $AgNO_3$ solution. If the beam intensity is not visible at all, or if easily visible (too strong), discard the solutions and make new standards.

2) Weigh 20.0 g. C.P. $AgNO_3$ into a chloride free dark bottle. Add 20 ml. C.P. HNO_3 (chloride-free). Dilute to 200 ml. with water.

3) All solutions should be freshly prepared every two weeks and stored in glass-stoppered Pyrex bottles.

b. Light Source:

Employ the 2 battery Penlite flashlight, having a 3-4 mm. light aperture. New batteries must be used frequently in order to perceive beams properly.

c. Procedure:

1) Thoroughly rinse two separatory funnels with chloride-free water three or four times. Then take an aliquot from each funnel in a test tube which has been rinsed with chloride-free water. Test these aliquots for Tyndall beams by adding 3-5 drops of $AgNO_3$ and allowing 45 sec. for full beam to evolve. Absolutely no dust or chloride beam should be present. (If beam is present, rinse all equipment with 1:1 HNO_3 and repeat Step 1).

2) When funnels are beam-free, drain out all the water except 50 ml. in one and 25 ml. in the other. Heat the water in both funnels to boiling. (Hold stopper while heating as steam may cause stopper to fail.)

3) Transfer 50 ml. of the sample from the sample bottle at a temperature of 95-100°C. into the separatory funnel containing the 50 ml. of boiling water. (As a precautionary measure, pour some of the sample from the sample bottle into a waste beaker before adding the 50 ml. to the funnel.)

4) Stopper the funnel and shake vigorously for at least 1 minute, venting frequently through the stopcock. (Care must be exercised at all times to touch neither the lower part of the funnel stem nor the ground part of the stopcock.)

TOWOLDMON0028636

5) Allow the layers to separate and drain off the sample into the second funnel containing the 25 ml. of boiling water. (As before, drain off a few ml. of the sample into a waste beaker before draining the sample into the second separatory funnel.) It may be necessary to heat the sample when transferring the sample to the second funnel; e.g., Aroclor 1260.

6) Repeat step 4 and allow the layers to separate. Then drain off the sample into a waste beaker.

7) Combine both water extracts in one funnel and shake thoroughly.

8) Take approximately a 10 ml. aliquot of the water extract out through the bottom of the funnel into a 3/4" x 6" test tube. Again, first allow a few ml. to drain out before taking the aliquot. (The test tube used should be rinsed with chloride-free water several times before using.)

9) Add approximately an equal portion of chloride-free ether. (The ether is tested by shaking a portion of it with chloride-free water and testing for Tyndall beam at the end of 45 sec. If beam is present, wash ether several times with chloride-free water until washings show no beam after adding 3-5 drops $AgNO_3$).

10) Shake the ether-water mixture until the emulsion in the sample disappears and the water layer is completely beam free before adding $AgNO_3$. If emulsion is difficult to break, add sample dropwise through the ether and then shake.

11) Add 3-5 drops of 10% $AgNO_3$ solution and test for chloride beam for 45 sec. exactly. If no beam is present at the end of 45 seconds, report as <0.1 ppm. The very faintest of beams is considered 0.1 ppm. If beam is stronger it will be necessary to compare with standards of 0.15, 0.20 up to 1.0 ppm, adding the 3-5 drops of $AgNO_3$ and comparing at the end of 45 sec.

The method is precise to the nearest 0.1 ppm.

Report results to the nearest 0.1 ppm.

7. METHOD NO. 10,087, "ACID NUMBER."

a. Reagents:

1) Nitration grade benzol.

0263183

TOWOLDMON0028637

2) Anhydrous methanol.

3) A saturated solution of phenol red (phenol sulfonphthalein) in methanol (approx. 0.1%).

4) A 0.01 N solution of KOH in methanol.

b. Procedure:

1) Place 100 ml. of benzol, 100 ml. of methanol and 0.5 ml. (pipette) of phenol red indicator into one of two clean dry 500 ml. Erlenmeyer flasks.

2) Neutralize carefully with the 0.01 N KOH (to be first definite pink color.)

3) Pour the mixture back and forth between the two flasks several times. If the solution is still neutral, divide it equally between the two flasks, if not, repeat steps 2 and 3.

4) Weigh (± 0.05 g.) into one of the flasks a 75.0 ± 5.0 g. sample and titrate with the 0.01 N, KOH until the sample matches the blank.

c. Calculations:

$$\text{Acid No. (mg. KOH/gram sample)} = \frac{\text{ml. 0.01 N KOH} \times 0.56}{\text{Sample Weight}}$$

Report the results to the nearest 0.001 if they are below 0.1, otherwise to the nearest 0.01.

The method is precise to ± 0.002 for acid numbers below 0.01 and to ± 0.01 in the range of 0.1 to 0.01.

NOTE 1: To convert mg. KOH/gram to mg. NaOH/gram, multiply by 0.715.

8. METHOD MODIFIED NO. 10,620, "MOISTURE (WATER)".

a. Introductory Comment:

The Karl Fischer Reagent titration method used in the analytical laboratory involves use of an analytical balance to weigh accurately about one drop of water used in preparing the standard. Since an analytical balance may not be available, the method has been modified and uses a purchased standard water solution as described below. Also, in the laboratory a "Dead Stop" potentiometric method for determining

TOWOLDMON0028638

the end point is often used. However, as this equipment may not be available, the procedure described below uses the visual indicator change for determining the end point.

b. Apparatus and Reagents:

1) Karl Fischer Burett, Automatic Pyrex No. 5750, 25 ml. capacity. Ace Glass Company, Vineland, New Jersey.

2) Water Standard in Methanol. No. SO-W-2 (1 ml. = 1 mg. H_2O) Fisher Scientific Company, 2800 Jefferson Ave., St. Louis, Missouri.

3) Karl Fischer Reagent Solution No. SO-K-2, Fisher Scientific Company.

c. Standardization of Karl Fischer Reagent

Into a 500 ml. clean, dry Erlenmeyer flask, place about 100 ml. "Anhydrous" methanol (commercially available, 99.95%). Add Karl Fischer reagent to this blank until the first color change from lemon yellow. It is not necessary to read the burette at this point. Carefully pipette 50 ml. of standard water solution into the blanked methanol. Refill the Karl Fischer burette. Titrate the solution with gentle swirling to mix, until the same color is obtained as was obtained for the blank. Now read the burette.

Moisture value of K.F. reagent in terms of grams H_2O per ml. =

$$\frac{\text{(Ml. Standard } H_2O \text{ solution)} \times \text{(Moisture value of standard water solution in gm. per ml. stated on label.)}}{\text{ml. Karl Fischer Reagent}}$$

d. Solvent Mixture:

Since the solubility of the different askarels varies, the following solvent mixtures are suggested:

Material	Anhydrous Benzene	Anhydrous Methanol
Pyranol 1478	0 ml.	300 ml.
Pyranol 1488	100 ml.	200 ml.
Pyranol 1467	100 ml.	200 ml.
Pyranol 1481	100 ml.	200 ml.
Pyranol 1495	100 ml.	200 ml.
All Aroclors	110 ml.	190 ml.
Inerteen PPO	100 ml.	200 ml.

TOWOLDMON0028639

e. Procedure, "Visual End Point."

1) Place 100-300 ml. of dry solvent mixture (c) in a dry 500 ml. ground glass-stoppered Erlenmeyer flask.

2) Titrate the solvent with K.F. reagent to the visual endpoint, i.e., the first change from the yellow to reddish orange that persists for 30 seconds. Refill the burette.

3) Using a beam balance, weigh to the nearest 0.1 gram by difference, a sample containing 0.03 to 0.06 grams H_2O into the flask.

4) Stopper and shake until the sample is in solution.

5) Titrate the solution with K.F. reagent to the endpoint described in Step 2. Record the volume of K.F. reagent used.

Calculation:

$$\% H_2O = \frac{\text{ml. of K.F. reagent} \times H_2O \text{ factor} \times 100}{\text{Sample Weight}}$$

References:

Mitchell, J. and Smith, D.M., Chemical Analysis, Vol. 5, Aquametry, Interscience Publishers, Inc., New York, (1948)

0263186

TOWOLDMON0028640

9. "HYDROLYSIS STABILITY TEST FOR ARCCLOR"

Purpose

To quantitatively determine the presence of unstable chlorine compounds in chlorinated biphenyls (askarels).

Principle

The method is based upon the hydrolysis of unstable chlorine compounds in askarels by methanolic sodium hydroxide. The resulting chloride ion is determined potentiometrically by titration with silver nitrate solution in an essentially non-aqueous medium. The measured chloride ion, reported as parts per million in the askarel sample, is indicative of the relative stability of the askarel in a dielectric system.

Reagents

1. Methanol (chloride free) - 5 liters of methanol are refluxed with 0.5g Analytical Reagent Grade $AgNO_3$ for 1/2 hour. The methanol is then distilled from the $AgNO_3$, discarding the first 100 ml. to flush the apparatus. 90% of the charge is distilled from the flask and the contents of the flask are discarded. The methanol should be checked to assure purity by titration. The chloride ion concentration should be less than 0.01 ml. of 0.005N $AgNO_3$ per 100 ml. of methanol.

2. Sodium Hydroxide Reagent - Analytical Reagent Grade NaOH (may be obtained from Mallinckrodt Chemical Company) is used to prepare this reagent. A 0.1N solution is prepared by dissolving 4.0 grams of analytical reagent grade NaOH in 1 liter of chloride free methanol.

3. Sulfuric acid - Prepared by a 50:50 volumetric dilution of Analytical Reagent Grade concentrated sulfuric acid (can be obtained from Mallinckrodt Chemical Company) with chloride free (deionized or distilled) water. The acid is always poured into the water with constant stirring to prevent any dangerous build-up of heat.

4. 0.005N $AgNO_3$ and 0.0025N $AgNO_3$ - Prepared by dilution of an ampoule of concentrated aqueous $AgNO_3$. These ampoules can be obtained from Anachemica Chemical Limited, Champlain, New York. This reagent may also be prepared by dissolving 0.8495 g. of Analytical Reagent Grade $AgNO_3$ crystals (may be obtained from Mallinckrodt Chemical Company) in one liter of chloride free water containing 3.0 ml. of concentrated nitric acid. This solution should be standardized against a pure chloride standard. A sodium chloride crystal such as used in infrared spectrometer cells is a good source of pure NaCl. The $AgNO_3$ solutions should be checked (at least monthly) to assure a consistent reagent.

TOWOLDMON0028641

5. Acetone (chloride free) - Prepared by distillation from $AgNO_3$ as described above, for methanol and should also be checked by potentiometric titration to assure optimum purity. Normally a chloride content of less than 0.01 ml. of 0.0025N $AgNO_3$ per 100 ml. is derived by this method.

6. Benzene - Analytical Reagent Grade benzene should be used. This material is normally chloride free but should be checked by potentiometric titration to be certain. Analytical Reagent Grade benzene may be obtained from Mallinckrodt Chemical Co.

Equipment

1. 200 ml. tall form beaker (Berzelius type).

2. Magnetic stirrer - A suitable magnetic stirrer with ring stand base can be obtained from Fisher Scientific Co. Cat. #14-511-1. This stirrer has a built-in rheostat and should be set at full speed and operated through a variac to adjust its speed. This will prevent heating of the stirrer during the stirring operation.

3. Teflon magnetic stirring bar - The bar should be cylindrical in shape and of one piece molded construction, one inch long. may be obtained from Fisher Scientific Co., Cat. #9-311-9.

4. Microburet graduated in 0.01 ml. divisions - A suitable buret may be obtained from Scientific Glass Apparatus Co., Inc. Bloomfield, New Jersey Cat. #JM-570.

5. Silver electrode - The Beckman silver billet electrode Cat #39261 is the preferred type.

6. Glass electrode - A standard glass electrode such as Beckman electrode Cat. #40498.

7. pH meter suitable for use with glass electrode - A model GS Beckman pH meter can be used. This instrument has the expanded scale and provides greatest sensitivity to incremental emf changes. A somewhat less sensitive but, nonetheless, useable meter such as Beckman "Zeromatic" or the Leeds Northrup line operated pH meter can be used.

8. Water bath - An individual glass water bath 150mm in diameter 75mm high and containing 600 ml. of water heated to 40°C. ± 1°C. is used. This glass water bath can be obtained from Corning Glass Co., Corning, N.Y. Cat. #3140.

9. Usual laboratory glassware - 25 ml. pipette, buret or pipette graduated to deliver 0.5 ml., wash bottles for pure acetone methanol, water and a sturdy ringstand.

0263188

TOWOLDMON0028642

Procedure for 1242 Aroclor (1499 Pyranol)

1. Twenty five grams of askarel is weighed into a tared 200 ml. beaker to the nearest 0.01 gram on a suitable balance.

2. The magnetic stirring bar is then added to the beaker containing the sample (without the bar touching the operators' hands).

3. Twenty five ml. 0.1N NaOH (methanolic) is added by means of a 25 ml. pipette and the beaker is covered with a watch glass.

4. The sample beaker is immersed to a depth of 1 1/4 inches in the 40° ± 1°C. water bath on a magnetic stirrer and clamped securely to a firm support. The sample is stirred at as fast a speed as possible, without pronounced splashing, for 1 hour. The water bath is not heated. No effort is made to maintain the temperature at 40°C., and it will drift toward equilibrium with room temperature.

5. After the 1 hour stir, the sample beaker is removed from the bath, 0.5 ml. of dilute sulfuric acid is added to the sample by means of a suitable pipette or buret. 125 ml. of chloride free acetone is then added (a graduated cylinder is suitable for this purpose).

6. The sample is then titrated with 0.005N $AgNO_3$ solution using the silver-glass electrode system.

   Normal samples of askarel require extremely small amounts of $AgNO_3$, for this reason the titration is run using 0.01 ml. additions and allowing sufficient time for equilibrium to be established before recording the emf change. If a change of less than 1mv per 0.01 ml. addition is observed for 3 or 4 .01 ml. increments, larger additions of $AgNO_3$ may be used for instance .05 ml. until such a change is observed. The additions then are reduced to 0.01 ml. again to complete the titration. The endpoint normally is defined by two 50mv changes. A normal titration would yield the following typical data.

MV	dMV*	ML	dML	dMV/dML X 10^{-2}
400	0	.06	0	0
392	8	.07	.01	8
352	8	.08	.01	8
341	11	.09	.01	11
321	20	.10	.01	20
271	50	.11	.01	50
221	50	.12	.01	50
201	20	.13	.01	20
285	16	.14	.01	16

0263189

* Using the GS pH meter the change is measured in 0.2mv units and hence the meter changes observed would be 5 times this value (i.e. 25 units for 5mv).

TOWOLDMON0028643

To calculate the change per 0.01 ml. observed, the mv change is divided by the volume of $AgNO_3$. By plotting dmv/dml vs. ml., the endpoint may be found to the nearest 0.001 ml. This gives a sensitivity of ± 0.007ppm - to define the endpoint to ± .01 ml. no plotting is necessary and a sensitivity of ± 0.07ppm is assumed.

7. A reagent blank is run exactly as above omitting the askarel sample.

Calculations

Subtract the reagent blank from the total volume of $AgNO_3$ and for the sample then:

$$\text{Reactive Chlorine (ppm)} = \frac{\text{Net Volume } AgNO_3 \times \text{Normality } AgNO_3 \times 35.46 \times 10^3}{\text{weight}}$$

Procedure for 1254 and 1260 Aroclors (more viscous askarels)

The procedure is followed exactly as above except that under Procedure, Step 2, 5 ml. of benzene is immediately added to the askarel sample and stirring bar. The sample is heated until it dissolves in the benzene and cooled to room temperature before proceeding to Step 3.

The benzene, of course, should be included in the reagent blank determination.

Procedure for Micro Test

The dechlorination test may also be run on 5 gram samples of askarels with a reduction in sensitivity. It is run exactly as the 25 gram test above except that the amount of reagents then used are 5.01 ml. NaOH (0.1N methanolic), 0.1 ml. H_2SO_4 for acidification, and 50 ml. of acetone to dilute the sample. 0.0025N $AgNO_3$ is used to titrate this size sample. The sensitivity is then ± 0.18ppm rather than ± 0.07ppm given by the 25 g sample (without plotting the endpoint).

General Comments

A rapid titration can be made to the nearest 0.1 ml. using the normal potential at the equivalence point or use can be made of an automatic titrator for routine control procedures. The sensitivity in either case should be within ± 0.7ppm of the value obtained by more refined techniques with 0.005N $AgNO_3$ and a 25 gram sample.

The usual analytical precautions should be exercised in using this test method to prevent cross contamination from other sources of halogen in the laboratory. This means that all glassware, apparatus, and the area in which this test is run should be analytically clean.

TOWOLDMON0028644

10. "THERMAL STABILITY METHOD FOR AROCLORS"

Scope

This method measures the thermal stability (chloride content) of chlorinated biphenyls used primarily as dielectrics. It is used for determining the quality of finished Aroclors.

Principle

Certain impurities if present in chlorinated biphenyls will break down at elevated temperatures with the liberation of HCl. The volatile HCl is swept out of the sample with air, absorbed in water and titrated with silver nitrate solution. The results are expressed as parts per million chloride obtained during a 16 hour thermal stability test period.

Reagents

1. Acetone. No special grade is required. It must contain no titratable chlorides.

2. 1% HNO_3. Dilute 1 ml. concentrated HNO_3 to 100 ml.

3. 0.005 $NAgNO_3$. 0.8495g to 1000 ml. 5 ml. 0.1 $NAgNO_3$ (if available) to 100 ml.

Apparatus

1. Pressure Regulator. Moore - Model 40 - 2 - 0-50" Water. Moore Products Co. H & Lycoming St., Philadelphia 24, Pennsylvania.

2. Thermoregulator. Cenco - 99015 - (Central Scientific Co.)

3. Relay. Ebert Micrelay SPST Std. Type. Ebert Electronics Corp., Queens Village, N.Y. (Any sensitive, reliable relay can be used).

4. Stirring Motor. Bodine NSI-13 B-2224 1/40 HP. 1725 R.P.M.

5. Bath Fluid. Dow Corning 550. 5 gallons

6. Leeds & Northrup ac. operated pH Meter - Cat. No. 7664

7. Silver wire electrode 0263191

8. Mercurous Sulfate Reference Electrode. Modified L & N calomel reference electrode prepared as follows. Dismantle the internal element from the salt bridge tube of a standard L & N calomel reference electrode. Discard the saturated KCl solution from the tube and clean out the mercurous

TOWOLDMON0028645

chloride and mercury from the internal element. Clean parts thoroughly. Add sufficient new clean mercury to the internal element to make contact with electrode wire and repack chamber of internal element with mercurous sulfate moistened with 0.5M potassium sulfate. Seal the chamber with non-absorbant cotton. Fill the salt bridge tube with 0.5M potassium sulfate and reassemble units.

9. Burette. 1.0 ml. microburette - Koch - Fisher Scientific Co. - 20-110.

10. Magnetic Stirrer and glass covered stirring bar.

11. Glass Apparatus for Samples in Bath. See attached diagram.

12. Capillaries. Glass capillaries approximately 0.2 mm in diameter and cut to a length that permits a flow of 45 ml. per min. of air.

13. Variac. 2 KVA.

14. Air Supply. Air under 40 lb. pressure is available in our laboratories. This air is purified by passing through a scrubber bottle containing 40% NaOH, an empty bottle which serves as a safety, a second bottle containing conc. H_2SO_4 and a trap immersed in dry ice and acetone. The purified air is connected to a glass manifold having one connection for each sample. Capillaries of the appropriate length are connected between the manifold and the outlet for each sample. In this manner a constant flow of air can be obtained on all samples by applying a constant pressure to the manifold.

15. Heating Bath. A stainless steel bath constructed according to the specifications given in the attached diagram is used. The bath is heated by applying 85 Volts to 3-500 Watt G.E. strip heaters bolted to the bottom of the bath. One 500 Watt Immersion heater is connected to the thermostat. Dow Corning 550 silicone is used as the bath liquid. The temperature is maintained at 210° $\pm$ 0.2°C. The bath should be placed in hood and the tests carried out in total darkness. Two 3 X 5" stainless steel plates not shown in the sketch are placed on top of the straightening vanes in the bottom of the bath. This provides better stirring to the ends of the bath. Twelve samples can be run in the bath at one time.

Procedure

0263192

Weigh a 290 $\pm$ 1 g. sample of Aroclor into the 300 ml. Erlenmeyer flask. Insert the gas inlet tube and position the flask in the 210° $\pm$ 0.5°C. bath. The bath fluid level should be approximately one inch below the bottom of the ground glass joint on the flask. Place 10 ml. distilled water in the Volhard flask absorber and attach to the receiver tube from the Erlenmeyer flask. Connect the purified air supply from the capillary to the inlet down tube

TOWOLDMON0028646

in the flask. Bubble air through the sample for 16 hours at the rate of 35 to 45 ml. per minute. (The apparatus and/or sample must be kept in the dark during the 16 hour period). Transfer the water from the absorber to a 100 ml. beaker using approximately 50 ml. acetone, and 2 drops 1% HNO_3 solution and titrate with 0.005N $AgNO_3$ solution using a magnetic stirrer. The titration is stopped at 75 mv. which represents the point of maximum potential change and the titration endpoint. Silver wire and mercurous sulfate electrodes (Ag-Hg, Hg_2SO_4, 0.5M K_2SO_4 system) are used for the titration.

Calculations

(Total ml. 0.005 $NAgNO_3$ used) (0.61) = ppm chloride

1 ml. 0.005 $NAgNO_3$ is equivalent to 0.0001773g. chloride or 0.61 ppm.

Precision and Reliability

The precision of the test (standard deviation) is 0.02 ppm at the 0.5 ppm chloride level and 0.06 ppm at the 2.8 ppm level. The method as written does not necessarily quantitatively measure the total unstable chlorides present. For screening purposes a total chloride figure is not necessary. Experience has shown that there is good correlation between the chloride figures obtained by this 16 hour thermal stability test and the quality of chlorinated biphenyls.

Discussion

The air supply can be checked for chloride contamination by passing the air through an empty sample flask immersed in the bath. Not more than 0.03 ml. 0.005 $NAgNO_3$ should be required to give the endpoint. The air supply can be checked for ammonia by measuring the pH of the absorber solution or titrating with 0.01N HCl. The pH should be between 6 and 7. Compressed cylinder air available for breathing purposes can perhaps be used without any purification. Experience has shown that nitrogen gives low chloride figures. This indicates that air is a necessary part of this test and that nitrogen cannot be used as a substitute. Gum rubber tubing is used in making all connections. The apparatus is cleaned with acetone.

0263193

TOWOLDMON0028647

CHAPTER 7

TYPICAL PROPERTIES

The 1200 series members of the Aroclor family are chlorinated biphenyls, and are made by chlorinating biphenyl to approximately the percentage of chlorine, by weight, indicated by the last two digits of the serial number. For example, Aroclor 1254 is approximately 54% chlorine on a weight basis. Accordingly, these Aroclors are not single or simple compounds. They are a mixture of isomeric compounds composed predominately of the chemical compound indicated below as being their approximate equivalent:

Aroclor 1242	Trichlorobiphenyl
~~Aroclor 1248~~	~~Tetrachlorobiphenyl~~
Aroclor 1254	Pentachlorobiphenyl
~~Aroclor 1260~~	~~Hexachlorobiphenyl~~
Aroclor 1016	Trichlorobiphenyl with a minimum of penta/hexa

For transformer use and some capacitor use where lower viscosity is required for better low temperature operation than offered by the above Aroclors, these products are mixed with pour point depressants, particularly trichlorobenzene resulting in various ~~General Electric Company~~ Pyranols and Inerteens, ~~described briefly as follows:~~

stet

~~Transformer Pyranol 1467*~~	~~60% of Aroclor 1260~~
	~~40% of Elec. Grade~~
	~~Trichlorobenzene~~
	~~0.125% of Tin Tetraphenyl~~
~~Transformer Pyranol 1470*~~	~~45% of Aroclor 1260~~
	~~55% of Elec. Grade Trichloro~~
	~~Tetrachlorobenzene Mixture~~
	~~0.125% of Tin Tetraphenyl~~

2

~~*Use of tin tetraphenyl scavenger is subject to G.E. patents~~ and license: Royalty arrangements should be checked before using Pyranol 1467. Questions about license concerning the use of anthraquinone stabilizer for DC capacitors should be referred to ~~Western~~ Electric, 195 Broadway, N.Y.C.

0263194

TOWOLDMON0028648

Transformer Inerteen PPO	60% of Aroclor 1260 40% of Elec. Grade Trichlorobenzene 0.20% Phenoxypropene oxide
Capacitor Pyranol 1481	75% of Aroclor 1254 25% of Elec. Grade Trichlorobenzene

Detailed properties of all of these products are given in the following property lists.

0263195

TOWOLDMON0028649

Inerteen 70/30	70% of Aroclor 1254 30% of Electrical Grade Trichlorobenzene 0.20% of Glycidyl Phenyl Ether
Pyranol A-13 B3B-3	60% of Aroclor 1254 40% of Electrical Grade Trichlorobenzene 0.15% of U-nox Epoxide
Inerteen 100/42	99.8% of Aroclor 1242 0.20% of Glycidyl Phenyl Ether

Detailed properties of these products are given in the following property lists.

0263196

TOWOLDMON0028650

AROCLOR 1232

PROPERTY	TYPICAL
Visc. @ 37.8°C. (ASTM D88)	44 - 51
Specific Gravity @ 25/15.5°C. (ASTM D287)	1.270 - 1.280
Color, APHA	50 Max.
Condition	Clear
Acidity, mg. KOH/g.	0.014 Max.
Pour Point, °C. (ASTM D97)	-30 or lower
Inorganic Chlorides, ppm.	0.10 max.
Refractive Index @ 25°C.	1.6200 - 1.6220
Distillation Range (ASTM D20) Corrected for stem and barometic pressure	10% - 293°C. min. 50% - 310 - 320°C. 90% - 360°C. max.
Corrosion	After heating with aluminum for six hours at 210°C. ± 10°C. the aluminum must not be corroded either on visual or weight inspection and the Aroclor 1242 should meet the following specs: Color, APHA 100 max. Acidity, mg.KOH/g. 0.014 max. Inorg. Chlorides, ppm. 0.10 max. Condition Clear
Water Content, ppm	35 max.
Resistivity 100°C., 500 volts DC @ 0.1"gap	500 x 10^6 Ohm-cm., min.
Dielectric constant 100°C. @ 1000 cycles (ASTM D924)	4.3 - 4.5
Sulfates (ASTM-D117-31)*	None
Fixed Chlorine content (Carius)*	31.5 - 32.5
Dielectric Strength (KV) (ASTM D877)*	35 min.
Hydrolysis Stability Test Chlorides, ppm.	3.0 (tentative) max.
Thermal Stability Test Chlorides, ppm.	0.5 (tentative) max.

*Not determined unless by special request.

0263197

TOWOLDMON0028651

AROCLOR 1242

PROPERTY	TYPICAL
Visc. at 37.8°C. (ASTM D88)	82 - 92 seconds Saybolt Univer.
Specific Gravity at 25/15.5°C. (ASTM D287)	1.381 - 1.392
Color, APHA	50 max.
Condition	Clear
Acidity, mg. KOH/g.	0.01 max.
Pour Pt., °C. (ASTM D97)	-14 or lower
Inorganic Chlorides, ppm.	No detectable amount
Refractive Index at 25° C.	1.6240 - 1.6260
Distillation Range (ASTM D20) Corrected for stem and barometric pressure	10% 325°C. min. 90% 360°C. max.
Corrosion	After heating with aluminum for six hours at 210°C ± 10°C, the aluminum must not be corroded either on visual or weight inspection and the Aroclor 1242 should meet the following specs: Color, APHA 60 max. Acidity, mg.KOH/g. 0.01 max. Inorg.Chlorides,ppm no detectable amount Condition Clear
Water Content, ppm	35 max.
Resistivity 100°C. 500 volts DC at 0.1" gap	500 x 10^9 ohm-cm., min.
Dielectric Constant 100°C. at 1000 cycles (ASTM D924)	4.7 - 4.9
Flash Point Cleve. Open Cup*	170 - 200°C.
Fire Point °C.*	None to boiling point
Sulfates (ASTM-D117-31)*	None
Fixed chlorine content (Carius)*	43 ± 0.5%
Specific Heat at 25°C.*	0.29
Evaporation at 100°C for 6 hrs.*	0.4% max.
Dielectric Strength (KV) (ASTM D877)*	35 Min.

*Not determined unless by special request.

Hydrolysis Stability Test chlorides, ppm	1.0 (tentative) max.
Thermal Stability Test chlorides, ppm	0.40 (tentative) max.

0263198

TOWOLDMON0028652

AROCLOR 1248

PROPERTY	TYPICAL
Visc. at 54.4°C. (ASTM D-88)	73 80, Sec. Saybold Universal
Spec. Gravity at 65/15.5°C. (ASTM D-287)	1.405 - 1.415
Color, APHA	100 Max.
Condition	Clear
Acidity, mg. KOH/g.	0.01 max.
Pour Point °C. (ASTM D-97)	-7
Refrac. Index at 20°C.	1.6285 - 1.6305
Dist. Range (ASTM D-20)	First drop 310°C. min. 10% - 345°C. Min. 90% - 385°C. Max.
Water Content, ppm.	35
Resist. 100°C. 500 v D.C. at 0.1" gap	500 x 10^9 Ohm-cm., min.
Dielectric constant, 100°C. 1000 cycle	4.6
Dielectric Strength 25°C.*	35 KV min.
Flash point, (C.O.C.)*	193°C.
Fixed Chlorine (Carius)*	47.5 - 48.5%
Specific heat at 25°C.*	0.27
Inorganic chlorides, ppm.	0.10 max.

*Not determined unless by special request.

Hydrolysis Stability Test chlorides, ppm.	3.0 (tentative) max.
Thermal Stability Test chlorides, ppm.	0.5 (tentative) max.

0263199

TOWOLDMON0028653

AROCLOR 1254

PROPERTY	TYPICAL
Visc. at 98.9°C. (ASTM D88)	44 - 48 sec. Saybolt Univer.
Specific Gravity at 65/15.5°C. (ASTM D287)	1.495 - 1.505
Color, APHA	100 max.
Condition	Clear
Acidity, mg.KOH/g.	0.01 max.
Pour Pt. °C. (ASTM D97)	7 - 12
Inorganic Chlorides, ppm.	No detectable amount
Refractive Index at 25°C.	1.6370 - 1.6390
Distillation Range (ASTM D20) Corrected for stem and Barometric Pressure	10% 366 - 378°C. 50% 371 - 383°C. 90% 379 - 394°C.
Corrosion	After heating with aluminum for 6 hours at 210°C. plus or minus 10°C. the aluminum must not be corroded either on visual or weight inspection and the Aroclor 1254 should meet the following specs:
	Color, APHA — 150 max. Acidity, mg.KOH/g. — 0.01 max. Free Chlorides, ppm. — No detectable amount Condition — Clear
Water Content, ppm.	35 max.
Resistivity 100°C., 500 v D.C. at 0.1" gap	500 x 10^9 ohm-cm., min.
Dielectric Constant, 100°C. 1000 cycles	4.15 - 4.35
Dielectric Strength, 25°C.*	35 KV, min.
Burn Point (ASTM D92)*	Higher than 350°C.
Sulfates (ASTM D-117-31)*	None
Fixed Chlorine Content (Carius)*	55 + 0.5%
Evaporation at 100°C. for 6 hrs.*	0.4% max.
Stability*	There shall be no liberation of chlorine or chlorides when the material is heated at 100°C. in glass vessels in contact with air for periods of at least one month.
Ageing Characteristics*	No loss in resistivity over original value on heating in air for 96 hrs. at 100°C.
Specific Heat at 25°C.*	0.26

*Not determined unless by special request.

Hydrolysis Stability Test Chlorides, ppm.	3.0 (tentative)max.
Thermal Stability Test Chlorides, ppm.	0.5 (tentative)max.

0263200

TOWOLDMON0028654

AROCLOR 1260

PROPERTY	TYPICAL
Visc. at 98.9°C. (ASTM D88)	72 - 78 Sec. Saybolt Univ.
Specific Gravity at 90°C./15.5°C. (ASTM D287)	1.555 - 1.566
Color, APHA	150 max.
Condition	Clear
Acidity, mg.KOH/g.	0.01 max.
Pour Pt., °C.(ASTM D97)	25 - 34
Inorganic chlorides, ppm.	No detectable amount
Refractive Index, 25°C.	1.6455 - 1.6470
Distillation Range (ASTM D20) Corrected for stem and barometric pressure.	10% 385 - 398°C. 50% 390 - 404°C. 90% 400 - 420°C.
Corrosion	After heating with aluminum for 6 hrs. at 210°C. ± 10°C. the aluminum must not be corroded either on visual or weight inspection and the Aroclor 1260 should meet the following specs:

Color, APHA	150 max.
Free Chlorides,ppm.	No detectable amount.
Acidity,mg.KOH/g.	0.01 max.
Condition	Clear

Water content, ppm.	35 max.
Resistivity,100°C. 500 volts at 0.1" gap	500 x 10^9 ohm-cm., min.
Dielectric Strength 50°C.*	30 KV., min.
Dielectric Strength 100°C.*	30 KV., min.
Dielectric Constant 100°C. at 1000 cycles*	3.6 - 3.8
Burn Pt. (ASTM D92)*	Higher than 350°C.
Sulfates (ASTM D117-31)*	None
Fixed chlorine content (Carius)*	60 ± 0.5%
Evaporation at 100°C. for 6 hrs.*	0.2% max.
Stability*	There shall be no liberation of chlorine or chlorides when the material is heated at 100°C. in a glass vessel in contact with air for periods of at least one month.
Specific Heat at 25°C.*	0.23

*Not determined unless by special request.

Hydrolysis Stability Test chlorides,ppm.	3.0 (tentative) max.
Thermal Stability Test chlorides, ppm.	0.7 (tentative) max.

0263201

TOWOLDMON0028655

PYRANOL 1481

PROPERTIES	TYPICAL
Viscosity at 37.8°C.	70 - 82 sec. Saybolt Univ.
Spec. Gravity at 15.5/15.5°C.	1.525 - 1.535
Color, APHA	150 max.
Condition	Clear
Acidity, mg. KOH/g.	0.01 max.
Pour Pt., °C.	-15 or lower
Inorganic Chlorides, ppm.	0.10 max.
Refractive Index at 25°C.	1.6205 - 1.6215
Distillation Range	
Corrected for stem and barometric pressure.	
First drop	205°C. min.
25% max.	Below 270°C.
90%	380 - 395°C.
Corrosion Test	
Change in Weight	0.0%
Color, APHA	200 max.
Acidity, after test, mg.KOH/g.	0.01 max.
Free Chlorides, ppm.	0.10 max.
Condition after test	Clear
Water Content, ppm.	35 max.
Resistivity at 100°C 500 volts, DC, 0.1"gap	100 x 10^9 ohm-cm.,min.
Dielectric Constant (100°C., 1000 cycles)	4.1 - 4.6
Hydrolysis Stability Test chlorides, ppm.	3.0 (tentative) max.
Thermal Stability Test chlorides, ppm.	0.5 (tentative) max.

0263202

TOWOLDMON0028656

PYRANOL 1488

PROPERTIES	TYPICAL
Visc. at 37.8°C.	54 - 2 Sec. Saybolt Univ.
Spec. Grav. at 15.5/15.5°C.	1.560 - 1.568
Color, APHA	150 max.
Acidity (Mg KOH/g)	.014 max.
Water, ppm.	35 max.
Condition	Clear
Refrac. Index at 25°C.	1.6137 - 1.6147
Free Chloride, ppm.	0.10 max.
Pour Point, °C.	Lower than -32°C.
Resis. at 100°C., 500 v D.C. 1" gap	100 x 10^9 ohm-cm min.
Dielectric Strength (25°C.)	Over 35 KV
Corrosion: Loss of Aluminum	None. Heating with aluminum for 6 hrs. at 200-220°C. The Pyranol after heating should meet the following specs:
	Color, APHA 200 max.
	Acidity (MgKOH/g) .014 max.
	Free Chlorides ppm .10 max.
	Condition Clear
Dielectric Constant at 1000 cycles at 100°C.*	3.7 - 4.0
Distilling Range (corrected)*	
1st drop	200°C. min.
Below 270°C.	40% max.
90% point	295 - 415°C.
Burn Point (ASTM D-92)*	None up to boiling point
Fixed Chlorines*	59.1% min.
Arc Formed Gases* (Oxygen-free liquid at 25°C.)	Less than 1.0% total combustible gases including carbon monoxide, hydrogen, and volatile hydrocarbons.

*Not determined unless by special request.

0263203

TOWOLDMON0028657

PYRANOL 1467

PROPERTIES	TYPICAL
Visc. at 37.8°C., (ASTM D88)	54 ± 2 sec. Saybolt Univ.
Specific Gravity at 15.5/15.5°C. (ASTM D-287)	1.560 - 1.568
Color, APHA	150 max.
Condition	Clear
Acidity, mg. KOH/g.	0.01 max.
Pour Point, °C. (ASTM D-97)	-32°C. or lower
Inorganic Chlorides, ppm.	0.10 max.
Refractive Index at 25°C.	1.6137 - 1.6147
Distillation Range (ASTM D20) Corrected for stem and barometric pressure	1st drop - 200°C. min. Below 270°C. - 40% max. 90% - 395 - 415°C.
Corrosion	After heating with aluminum for 6 hrs. at 200-220°C., the aluminum must not be corroded either on visual or weight inspection and the Pyranol should meet the following specs:

Color, APHA	200 max.
Acidity, mg.KOH/g.	0.01 max.
Inorganic Chlorides ppm.	5 max.
Condition	Clear

Water Content, ppm.	30 max.
Resistivity, 100°C. 500 volts, 0.1" gap	100×10^9 ohm-cm., min.
Dielectric Strength, 25°C.	35 KV., min.
Dielectric Constant, 100°C. 1000 cycles*	3.7 - 4.0
Tin Tetraphenyl*	0.125% ± 0.01% by weight
Burn Point, (ASTM D92)*	None up to Boiling Point
Fixed Chlorine*	59.1% min.
Arc Formed Gases* (Oxygen Free Liquid at 25°C.)	Less than 1.0% Total combustible gases including carbon monoxide, hydrogen and volatile hydrocarbons.

*Not determined unless by special request.

0263204

TOWOLDMON0028658

PYRANOL 1470

PROPERTIES	TYPICAL
Visc. at 37.8°C. (ASTM D88)	41-45 Sec. Saybolt Univ.
Spec. Gravity at 15.5/15.5°C., (ASTM D287)	1.563 - 1.571
Color, APHA	150 max.
Condition	Clear
Acidity, mg. KOH/g.	0.01 max.
Pour Pt., °C., (ASTM D97)	-44°C., or lower
Inorganic Chlorides, ppm.	0.10 max.
Refractive Index at 25°C.	1.6075 - 1.6085
Distillation Range (ASTM D20) Corrected for stem and barometric pressure	
First drop	210°C., min.
35%	240 - 256°C.
55%	290 - 330°C.
65%	385 - 400°C.
95%	395 - 415°C.
Corrosion	After heating with aluminum for 6 hrs. at 200-220°C., the aluminum must not be corroded either on visual or weight inspection and the Pyranol should meet the following specs:
	Color, APHA 200 max. Acidity, mg.KOH/g. 0.01 max. Inorg.Chlorides,ppm 5 max. Condition Clear
Water Content, ppm.	30 max.
Resistivity, 100°C., 500 v., 0.1"gap	100 x 10^9 ohm-cm., min.
Dielectric Strength, 25°C.	35 KV., min.
Dielectric Constant, 100°C., 1000 cycles*	3.8 - 4.3
Tin Tetraphenyl*	0.125% ± 0.01% by weight
Burn Point, (ASTM D92)*	None up to Boiling Point
Fixed Chlorine*	60.5 ± 0.5
Arc Formed Gases* (Oxygen Free Liquid at 25°C.)	Total combustible gases including carbon monoxide, hydrogen and volatile hydrocarbons.
Electrical Stability*	After heating for 96 hrs. at 100°C. in a closed container, the resistivity should not decrease more than 10%.

*Not determined unless by special request.

0263205

TOWOLDMON0028659

INERTEEN PPO

PROPERTIES	TYPICAL
Visc. @ 37.8°C., (ASTM D88)	54± 2 sec. Saybolt Universal
Specific Gravity @ 15.5/15.5°C. (ASTM D-287)	1.560 - 1.568
Color APHA	150 max.
Condition	Clear
Acidity, mg. KOH/g.	0.014 max.
Pour point, °C. (ASTM D-97)	-32°C. or lower
Inorganic Chlorides, ppm.	0.10 max.
Refractive Index @ 25°C.	1.6137 - 1.6147
Distillation range (ASTM D20)	First drop - 200°C. min.
Corrected for stem and barometic pressure	Below 270°C. - 40% max.
	90% - 395 - 415°C.
Corrosion	After heating with aluminum for 6 hours at 200 - 220°C. the aluminum must not be corroded either on visual or weight inspection and the askarel should meet the following specs:
	Color, APHA 200 max.
	Acidity, mg.KOH/g. 0.014 max.
	Inorganic Chlorides, ppm. 2 max.
	Condition Clear
Water content, ppm.	30 max.
Resist., 100°C. 500 Volts, 0.1" gap	100 x 10^{6} Ohm-cm., min.
Dielectric Strength, 25°C.	35 KV., min.
Dielectric constant, 100°C. 1000 cycles*	3.7 - 4.0
Phenoxy Propene Oxide or Glycidyl Phenyl Ether	0.18% - 0.22% by weight
Burn point, (ASTM D92)*	None up to boiling point
Fixed Chlorine*	59.1% min.
Arc formed gases*	Less than 1.0%
(Oxygen free liquid @ 25°C.)	Total combustible gases including carbon monoxide, hydrogen and volatile hydrocarbons.

*Not determined unless by special request.

0263206

TOWOLDMON0028660

CHAPTER 8

QUALITY REQUIREMENTS OF AROCLORS PRIOR TO USE IN THE ELECTRICAL INDUSTRY

Quality as Supplied to the Electrical Industry

Aroclors and their mixtures supplied to the electrical industry must meet the strict requirements specified by the industry and given in the specifications shown in Chapter 7. The electrical qualities, such as resistivity and power factor of the materials, as supplied, are not the maximum attainable. It is impractical for the manufacturer to furnish these dielectrics to the customer at the maximum attainable qualities because even with careful packaging, sampling, shipping, and handling, these fluids may pick up traces of contaminants from "clean" tank cars, drums, pipe lines, pumps, etc. However, as supplied in accordance with the specifications, the fluids must respond readily to "up-grading" by earth treatment to arrive at the desired maximum refinement required for use by the electrical industry.

Typical Electrical Quality of Aroclors Used in the Industry

Capacitor Impregnation

Table IV indicates the desirable minimum resistivity values of Aroclor dielectrics immediately after earth refinement by the user when ready to impregnate capacitors. These values are compared with the similar values of the material after the capacitor impregnation has been completed in a relatively clean system.

0263207

TOWOLDMON0028661

TABLE IV

Dielectric	Volume Resistivity Ohm-cm at 100°C. and 500 volts DC. Prior to impregnation	After impregnation
Aroclor 1254	2,500 x 10^9	800 x 10^9
Aroclor 1242	1,500 x 10^9	600 x 10^9
~~Pyranol 1481~~	~~600 x 10^9~~	~~400 x 10^9~~

The power factor of earth refined Aroclor prior to capacitor impregnation should not exceed 0.1 percent at 100°C. and 1000 cycles.

Transformer Filling

The minimum resistivity of transformer askarel as specified for supply to the electrical industry is 100 x 10^9 Ohm-cm. at 100°C., 500 volts and 0.1 inch gap. While power factor is not part of the suppliers' official specification, this value for freshly made transformer askarel ranges from 0.1 to 0.3 percent at 100°C. and 1000 cycles. This would be approximately 0.05 percent at 20°C. and 60 cycles.

In order to arrive at higher and yet practical dielectric values the transformer manufacturer needs to earth refine the fluids immediately prior to using.

It is reasonable to strive for a volume resistivity value around 1,500 x 10^9 Ohm-cm. at 100°C. and power factor values of about 0.05 percent at 20°C. and 60 cycles or 2 percent at 100°C. and 60 cycles.

0263208

TOWOLDMON0028662

Table V compares resistivity readings with the corresponding power factor values obtained on the given samples of typical transformer askarel.

TABLE V

Volume Resistivity 10^9 Ohm-cm. at 100°C.	Power Factor 60 cy. 100°C.	60 cy. 20°C.
1,500	2%	0.05%
500	5%	0.1%
100	15%	0.7%
60-70	20-25%	2.0%

When adequately earth refined to give a resistivity in the range of 500 to 1500 x 10^9 Ohm-cm. at 100°C., sample of such transformer askarel taken after filling a newly constructed and relatively clean transformer should have a resistivity of at least 200 x 10^9 Ohm-cm. at 100°C. and a corresponding power factor less than 12 percent at 100°C. and 60 cycles.

TOWOLDMON0028663

CHAPTER 9

EARTH REFINEMENT OF AROCLORS TO ARRIVE AT THE DESIRED ELECTRICAL QUALITIES

Earth Treatment in the Laboratory Preparatory to Analysis

In Chapter 5 on Page 27 the laboratory procedure for preparing the test sample using 0.1 to 0.2 percent of activated earth is given. It is also stated that the absorbent is minus 200 mesh Attapulgus earth activated just prior to use by heating in shallow trays for four hours at 400°C. (752°F.) or for at least 12 hours at 250°C. (482°F.)

Earth Treatment by the Plant Manufacturing the Askarel

Earth refinement in the plant is essentially the same as used when preparing the laboratory sample. The same amount of freshly conditioned earth (up to 0.1 percent to 0.2 percent by weight) is added to the askarel and the mixture is agitated thoroughly and heated for about four hours.

The more viscous dielectrics, such as ~~Aroclor 1248~~ and Aroclor 1254, are heated at about 70 to 80°C. (158° to 176°F.). ~~and~~ The less viscous materials such as Aroclor 1242 ~~and Pyranols 1481, 1467 and 1470, or Inerteen PPO~~ are heated at about 50° to 60°C. (122° to 140°F.) 0263210

After about four hours contact the earth is removed from the dielectric fluids using a Sparkler or Sweetland or a comparable filter press, previously fitted with filter paper liners such as supplied by ~~Carl Schleicher & Schuel Company, Inc., Keene, New Hampshire.~~ Sparkler Filter Corporation, Conroe, Texas 7730 The paper is ~~usually 25 mils thick~~ grade A-7 (25 mils)

TOWOLDMON0028664

and must be dried at 100°C. to remove moisture prior to use in the filter press.

Earth Refinement by the User

Capacitor Manufacturers: Capacitor manufacturers usually use the same procedure for earth refining as employed by the manufacturer of the askarels. Because this method employs loose earth which can be thoroughly mixed into the askarel, it is believed to be the most efficient and is certainly known to give very good results. However, towers (cylinders) filled with relatively coarse earth through which the dielectric fluids are pumped and recirculated have also been used by capacitor manufacturers.

Transformer Manufacturers: The large manufacturers of askarel transformers usually use the same type of procedure for refinement with loose earth as employed by the manufacturer of the askarel dielectrics. Handling relatively large amounts of the askarel transformer fluid justifies installing the tanks and filter presses required. This earth refining equipment is usually supplemented with portable cartridge type filters or a small portable platen frame type filter press. This latter equipment is then used when newly made askarel transformers are filled with the fluid and it is necessary to clean the transformer and the fluid by draining out the fluid pumping it through the filter press or cartridges containing the earth and recirculating until the desired electrical properties are attained.

Likewise, smaller manufacturers of askarel transformers can use most conveniently the portable cartridge or platen frame type filters.

0263211

TOWOLDMON0028665

The Effect of Earth Refinement on Removal of ~~Tin~~ ~~Tetraphenyl~~ Scavengers from the Transformer Askarel: As indicated above, normally transformer askarels respond readily to up-grading by the use of 0.1 to 0.2 percent by weight of earth based on the total weight of the fluid. However, if the fluids are unusually contaminated, larger amounts of earth are required to up-grade the dielectrics. This raises question about the selective adsorption of the scavengers by the earth treatment. It is indicated that to selectively adsorb significant amounts of the scavengers, repeated treatment with 1 percent or more of earth is required, ~~as shown in the following table:~~

~~TABLE VI~~

~~REMOVAL OF TIN-TETRAPHENYL BY REPEATED TREATMENT OF ASKAREL WITH ONE PERCENT OF EARTH~~

Sample	No.	Original	Tin-tetraphenyl Content After 4 treatments at 90°C.	After 7 treatments at 90°C.
Pyranol 1470	1	0.119%	0.018%	0.006%
			After 4 treatments at 60°C.	After 6 treatments at 60°C.
Pyranol 1470	2	0.107%	0.021%	0.003%

0263212

TOWOLDMON0028666

CHAPTER 10

CONTAMINATION

Askarels as supplied by the manufacturer respond readily to earth refining resulting in a very high order of dielectric properties. For example, it is possible to attain volume resistivity values up to 20,000 or 30,000 x 10^9 Ohm-Cm. at 100°C., 500 volts, 0.1 inch gap and power factor values no more than 0.05% at 100°C. and 1000 cycles.

Except for very special situations, it is not practical to refine these dielectrics to this extent. In commercial use, transfer of the fluids from one clean container to another which may result in contacting traces of conducting impurities does not allow maintaining such a high order of dielectric properties.

Referring to electrical values, this accounts for the more practical order of specification values as indicated in Chapter 7 and to which the electric industry has committed the supplier of the dielectrics. This also accounts for the desirability and need of the user of askarel dielectrics to earth refine immediately prior to use in order to arrive at the maximum and yet practical dielectric values for his given purpose. Such quality values relative to askarels for capacitors and transformer work were indicated in the preceding Chapter 8.

AVOIDANCE OF CONTAMINATING ASKAREL CAPACITORS

It is necessary, practical and economical that all steps possible be taken to avoid contaminating influences in the manufacture of askarel capacitors.

0263213

TOWOLDMON0028667

Sometimes capacitor manufacturers strive to attain the very high order of dielectric qualities possible for askarel as mentioned above. Since it is very difficult, if not almost impossible to maintain such a high order, usually capacitor manufacturers comply with the more practical schedule attainable by normal earth refining practices as shown in Table IV Chapter 8.

Equal care must be exercised in selecting, conditioning and handling the other construction materials of the askarel capacitor. For example, the water used in manufacturing capacitor tissue is either distilled or deionized. Quality control of the capacitor paper requires chemical tests to characterize the fiber and its purity. Physical and electrical tests to determine moisture and power factor are essential. Acceptable dielectric loss values of the dry and unimpregnated paper do not suffice for judging quality because in some instances after impregnation with good quality askarel, higher dielectric losses increasing rapidly with temperature may be obtained.

The aluminum foil used must be extremely pure and free from residual traces of rolling oils or compounds. Accordingly, the term usually applied to the foil is "dry" foil. Similar care and purity requirements apply to the aluminum tabs used.

The paper and aluminum foil is wound to form the core in an air conditioned room and often the machine operators are required to wear cotton gloves to prevent oil from the operators skin contaminating the cores.

0263214

The steel cans or turn plate capacitor cans require thorough cleansing and degreasing with perchloroethylene of required purity and free of any objectionable stabilizing agents. Similarly, the

TOWOLDMON0028668

capacitor impregnating equipment and chambers must be kept clean. To facilitate maintenance of cleanliness, sometimes stainless steel construction is used. However, ordinary steel equipment is common and when "conditioned", that is to say, coated with a thin film of clean Aroclor, this type of construction material is entirely satisfactory. To condition a new plant or clean an old one, askarel is circulated through the system, then purified by earth refining and recirculated. This process is repeated until all contaminating influences have been removed.

Moisture, probably the most obvious contaminent in askarel impregnated capacitors, increases the dielectric loss under AC voltage and decreases the capacitor life. Therefore, very efficient vacuum, as low as 5 or 10 microns, and heat carefully controlled up to 130°C. are employed to expel the moisture from the capacitor cores prior to impregnation. Also to avoid moisture entering the askarel during storage, it is common practice to warm the dielectric in the storage tank to about 50°C. in the presence of mild vacuum.

Traces of any substances soluble in askarel and capable of ionization will have a marked adversed effect on the dielectric loss of the askarel or the finished capacitor. Therefore, much care is required to avoid contamination with solder flux. For example, the use of rosin core solder is known to cause contamination. When rim sealing compounds are used in the lids of small capacitors, there must be assurance that the catalyst or other ingredients used in such materials do not cause contamination. Improperly selected pipe sealing compounds used on the threads on the fittings for sight glasses and instruments on the storage and impregnating equipment are known to have caused contamination.

0263215

TOWOLDMON0028669

* * * * * * *

All these factors about contamination must be kept in mind when impregnating capacitors, especially by the chamber method but also by the manifold method.

The moisture content of the paper used in the capacitor cores may easily introduce several gallons of water into the average impregnating chamber. This water is removed from the capacitors prior to impregnation -- usually by heating the chamber to 130°C. in the presence of efficient vacuum, 100 microns or less.

If the chamber is not made of the preferred materials of construction, slight corrosion (iron rusting) may occur and the film of askarel on the interior surface of the tank may become contaminated and introduce traces of impurities into the clean dielectric fluid entering the chamber for impregnating the capacitors. In fact, because of this possibility of contamination, in some operations the capacitors are conditioned and dried in a separate oven or chamber. Then when thoroughly dried, they are then transferred into a second chamber used only for impregnation.

In the case of relatively large sized capacitors, such as power factor correction units, a manifold with branches may be used to handle each unit individually rather than by the batch -- chamber method.

The unimpregnated capacitors are placed into an oven and vacuum is applied to the individual units attached to the manifold. After the capacitors have been evacuated and dried, the askarel is introduced through the manifold and its branches. Care must be taken that moist air or contaminants do not collect in the branches through which the dielectric is introduced.

* * * * * * *

TOWOLDMON0028670

Care must be taken to avoid contamination with any kind of grease, oil, packing material and "rubber" gaskets used with the machinery, such as pumps, etc., connected with the handling and impregnating facilities.

It is not practical to discuss all possible sources of contamination and it should suffice to say that the manufacturers of askarel capacitors need to and do exercise all known precautions to avoid contamination and should evaluate and life test representative units before supplying the finished merchandise.

AVOIDANCE OF CONTAMINATING ASKAREL TRANSFORMERS

Obviously, in the manufacture of askarel transformers it is impractical and impossible to employ purification or refinements as required, for example, in the production of askarel power factor correction capacitors.

In a transformer, heat from the dielectric losses of "slightly" contaminated askarel is negligible compared with heat generated by the transformer core. While power factor and resistivity of the transformer fluid are important, they are not as critical as is the case when similar askarels are used in capacitors.

However, this does not excuse the askarel transformer manufacturer from striving to meet the practical quality requirements as given in Chapter 8. In order to meet these requirements, it is necessary to earth refine the transformer askarel immediately prior to filling the unit. After the initial fill, the fluid should be withdrawn from the transformer, circulated through an earthen filter, then pumped back into the transformer and recirculated through the filter until both the fluid and transformer are clean and show the desired power factor and resistivity values.

0263217

TOWOLDMON0028671

If such normal earth refinement fails to give the desired results, it will be necessary to study the quality of the materials of construction and look for all possible sources of contamination in the transformer and handling equipment.

The characteristic high dielectric strength of transformer askarel is not a good criterion of purity because with the exception of being adversely affected by moisture, it is not impaired irrespective of the contamination of soluble products which give increased power factor. F. M. Clark of General Electric Company tabulated the following values of transformer askarel selected from hundreds of askarel samples taken from commercially operating transformers to show lack of reduction of dielectric strength with marked increase of power factor values.

TABLE VII

DIELECTRIC STRENGTH AND POWER FACTORS OF ASKAREL IN USED TRANSFORMERS

Sample	Power Factor, 60 cy. at 25°C., per cent	Dielectric Strength at 25°C. KV
No. 1	0.1	38
No. 2	0.5	35
No. 3	5	45
No. 4	15	39
No. 5	30	43

However, the need for care and proper selection of transformer construction materials is emphasized in the following tabulation which shows the marked increase of power factor resulting from contamination of the askarel with synthetic rubber materials and varnished cloth, as compared with acceptable materials of construction given in Table VIII.

0263218
TOWOLDMON0028672

TABLE VIII

POWER FACTOR CONTAMINATION PRODUCED BY TRANSFORMER MATERIALS AGED IN ASKAREL AT 100°C. FOR 96 HOURS

Material	Askarel Power Factor, Percent	Dielectric Strength, KV
None	1.0	35
Black varnished cloth	85.0	42
Copper	1.5	40
Press Board	2.0	37
Manila Paper	1.5	39
Phenolic resin	1.6	41
Shellac	6.0	36
Iron	5.0	39
Synthetic rubber	70.0	39

Contaminants which cause a high power factor will of course also impair resistivity values.

The following Table IX shows the degree to which acceptable and good commonly used materials of construction lower resistivity from the original high values possessed by the askarel.

TABLE IX

EFFECT OF COMMONLY USED INSULATION MATERIALS ON THE RESISTIVITY OF TRANSFORMER ASKAREL

Sample	Volume Resistivity x 10^9 Ohm-cm. at 100°C.
1. Freshly made askarel before heat aging	2,000
2. Same as 1, after heat aging	1,900
3. After heat aging with the following materials added	
a - Phenolic resin tap changer material	1,200
b - Paper	750
c - Grade A press board (tan)	500

0263219
TOWOLDMON0028673

d - Grade A press board (gray)	500
e - Grade A press board, laminated strip	400
f - Cotton wrapping	300
g - Glyptal 1276 cement, cured 48 hours at 110°C.	100

The procedure used to evaluate materials of construction is simple and should be employed by all makers of askarel transformers.

One inch square samples of the surface of the construction materials are immersed in one liter of good quality transformer askarel and heated for 96 hours at 100°C. The increase in power factor and reduction of resistivity of the fluid after such exposure are compared with the values of the original fluid heated similarly but in the absence of the construction materials.

The following Table X gives such a comparison and illustrates the unacceptable properties of the varnished cambric and black binding tape.

TABLE X

PROPERTY	FRESHLY MADE TRANSFORMER ASKAREL	SAME FLUID EXPOSED TO FIBER BOARD	VARNISHED CAMBRIC OR BLACK BINDING TAPE
PF, 100°C., 1 KC	0.2%	0.45%	3%
Resistivity, 100°C. Ohm-cm. x 10^9	2,500	436	18
Dielectric Strength at 25°C.	45 KV	45 KV	45 KV

When the askarel fluid contaminated with varnished cambric or the black binding tape was treated for one hour at 75°C. with one percent by weight of attapulgus earth, the power factor and resistivity values were restored to those of the original fluid.

TOWOLDMON0028674

While there seem to be no reports of askarel transformers failing in service as a result of contamination from the use of questionable materials of construction, as discussed above, their unwise use is readily detectable and leads to embarrassing question about impairment of the transformer's life.

Such a case is illustrated by an askarel transformer giving a megger reading reading as low as 3, after two years service life. The transformer had not been subjected to arcing and the dielectric strength of the askarel remained above 35 KV at 25°C., or well within the specification of new askarel. Maintenance of high dielectric strength in the presence of contamination appears to account for the transformer not failing.

The following Table XI compares the properties of freshly made askarel with the similar values of the fluid taken from the transformer after two years use and also with the same contaminated fluid following refinement by earth treatment.

TABLE XI

COMPARISON OF PROPERTIES OF CONTAMINATED TRANSFORMER ASKAREL BEFORE AND AFTER EARTH REFINEMENT

PROPERTY	TYPICAL OF NEW ASKAREL	SAMPLE FROM TRANSFORMER USED 2 YEARS	SAME SAMPLE AFTER EARTH TREATMENT 1 HOUR WITH 1% OF EARTH
PF., 100°C. 60 Cycles	1 to 2%	150%(dissipation factor)	1%
PF., 100°C. 1 Kc.	0.2%	15%	0.1%
Resist. 100°C. Ohm-cm. x 10^{9}	500 to 1500	6	2600
Dielectric Strength 25°C.	45	40	45
Moisture ppm.	25	80	20
Acidity mg. KOH/g.	0.01	0.02	0.005
Color APHA	70	1000	275

0263221

TOWOLDMON0028675

In the above case it was determined that a varnished insulating material used in the transformer was the source of contamination. Since this continuously dissolved in the askarel, obviously, removal of the fluid, followed by earth refinement and refilling the transformer accomplished nothing. The situation pertained at the time of the initial fill persisted until the deleterious component was removed.

Newly built or rebuilt transformers using acceptable materials of construction often contain undeterminable traces of impurities and "dirt" which effect power factor and resistivity, but can be removed by repeated flushing with clean askarel. The following Table XII compares the properties of the askarel sampled after the initial fill with similar values after earth refinement and "soaking" or flushing the transformer, twice with good askarel. After the "dirt" or contamination was removed from the transformer the askarel fluid remained in good condition in the unit as shown in Table XII.

TABLE XII

PROPERTY	SAMPLE AS RECEIVED	AFTER TREATMENT
Resistivity @ 100°C.	30×10^9	2600×10^9
Dielectric constant @ 100°C.	3.9	3.9
Power Factor @ 100°C., 1000 Cycles	2%	0.27%
Moisture	60 ppm.	25 ppm.

Moisture solubility in askarel at 25°C. is about 110 parts per million and the specification for new askarel allows a maximum of 30 parts per million of water.

Essentially, moisture-free askarel was found by Clark to have a dielectric strength of 70 KV. With increased amounts of dissolved

0263222

TOWOLDMON0028676

water the dielectric strength gradually decreased and appeared to level off at a value of about 38 KV when the water content reached 80 parts per million.

Water exceeding the solubility limit in askarel has a marked adverse affect on the power factor and resistivity of the dielectric fluid, which may, however, maintain its high breakdown strength even though water accumulates as a separate phase on the surface.

Undissolved moisture can be removed readily from transformer askarel by warming the fluid to 70°C. and blowing with dry nitrogen or by treatment with dry, conditioned earth and filtering through a press fitted with dry filter papers or through an earthen cartridge type filter.

As indicated previously, moisture must be kept out of askarel transformers by using adequate gaskets, as described in Chapter 3, and preferably sealing the device with dry nitrogen over the askarel.

Mineral oil is soluble in these fire-resistant transformer askarels and is regarded to be a contaminant. Petroleum hydrocarbons cannot be removed from askarels and the permissable amount may not exceed 2 percent by volume lest the fire-resistant values of the askarel is impaired beyond acceptable limits.

Possible contaminants in transformer manufacture include welding and solder fluxes, oils and greases, bituminous materials, pipe thread lubricants, and contamination from bushing and pot head compounds. Paint or varnish coatings must not touch the interior of the transformer shell. Adhesives or coatings applied to gaskets must not touch the interior of the transformer.

0263223

TOWOLDMON0028677

All natural or synthetic rubber plastics or polymeric materials, resins, varnishes and lacquers and adhesives must be regarded as contaminants unless included in the very few acceptable classes and proved suitable by actual testing.

It is disappointing to find an askarel transformer manufacturer exercising precautions against contamination, and employing earth refinement, and yet inadvertently using a neoprene or other objectionable hose line to transfer the fluid economically!! If flexible hose needs be used, it should be a flexible stainless steel type or a "rubber" hose lined with Teflon.

When using any of the following suggested suitable materials of construction, it is prudent to employ appropriate control evaluation tests to be certain that the given material within a class regarded as acceptable will meet the requirements from a physical and electrical standpoint.

TABLE XIII

ACCEPTABLE MATERIAL FOR CONSTRUCTION OF ASKAREL TRANSFORMERS

Structural Materials and Fillings

Metals - Commonly used metals including steel, copper, aluminum, tin and brass are suitable if clean.

Wood - Suitable if dry and free of natural gums and resins.

Paper - Suitable

Press Board - Suitable

Cotton - Suitable

Asbestos - Suitable

Glass - Suitable

Ceramics - Suitable

Phenol-formaldehyde resins - Suitable if adequately cured.

0263224

TOWOLDMON0028678

Melamine-formaldehyde resins - Suitable if adequately cured.

Cellulose acetate - Suitable

Cellulose tri-acetate - Suitable

Cork - Suitable

Gasketing Materials and Adhesives

Metals - (As above)

Teflon - Suitable

Silastic (silicone) - Suitable if adequately cured.

Polyurethane - Suitable if adequately cured.

Cork (fine grain and bonded with phenolic resin) - Suitable, but susceptible to penetration by askarel.

Nitrile rubber - Sometimes used for gaskets - but susceptible to attack by askarel.

Cork Nitrile rubber - Often used

Dewaxed Orange Shellac - Suitable

Epoxy - Suitable if adequately cured.

Isocyanate - Suitable if adequately cured.

Tapes and Wire

Insulation

Cotton - Suitable

Paper - Suitable

Asbestos - Suitable

Glass - Suitable

Rayon - Suitable

Cellulose acetate - Suitable

Teflon - Suitable

Silicone - Suitable

0263225

TOWOLDMON0028679

Surface Coating for Transformer Exterior

Baked Phenol-Formaldehyde - Suitable

Baked Melamine-Formaldehyde - Suitable

Baked Epoxies - Suitable

Polyurethane Coatings - Suitable

Surface Coating for Interior of Transformer Shell to Prevent Rusting in Storage

25 parts Aroclor 5460 dissolved in 75 parts lacquer thinner.

The need for clean shop practice and avoidance of contaminating influences when building askarel transformers is emphasized by the following information submitted by a highly qualified manufacturer to indicate the condition of askarel sampled from normally operating apparatus after a number of years service. Fluid sampled from the top and bottom of at least 25 askarel transformers operating satisfactorily in different part of the country was analyzed, comprehensively. The following general conclusions were drawn:

1. The residual condition of the askarel samples for the most part was satisfactory, but in a few instances excessive dirt or sediment was noted.

2. Moisture content ranged from 19 to 61 parts per million with most samples between 25 and 35 ppm. This reflects a very good degree of dryness.

3. Acidity values were all below 0.01 mg. NaOH/g., which corresponds with the level of freshly made askarel.

0263226

TOWOLDMON0028680

4. In most cases the free chlorides did not exceed 0.1 ppm., the specification limit of new askarel. The highest reading was 0.15 ppm.

5. Dielectric strength values ranged from a maximum of 46 KV to a minimum of 28 KV which values are considred satisfactory.

6. Volume resistivity at 100°C. ranged from 20 to 75 x 10^9 Ohm-cm. which is considered to be satisfactory and may be compared with the specification for new askarel at 100 x 10^9 Ohm-cm., minimum.

7. Power factor values at 100°C. and 60 cycles ranged from 19 to 75 percent with most samples below 60 percent.

From the above data considered typical and satisfactory relative to all of these askarel transformers operating in a normal manner, it is seen that under satisfactory service life the resistivity of the askarel will decrease and the power factor will increase, as indicated, from similar values of fresh askarel.

These observations emphasize the need for askarel transformer makers to:

1. Earth refine the askarel immediately prior to use in order to arrive at the highest practical electrical values from the fluid.
2. Avoid construction materials which are a source of contamination
3. In using acceptable and satisfactorily tested construction materials - to flush the transformer to remove traces of contaminating influences and "dirt".

0263227

TOWOLDMON0028681

CHAPTER 11

REWORKING CONTAMINATED TRANSFORMER ASKAREL

Normal Conditions

Askarel contaminated during manufacture of the transformer or after years of normal service life should respond very readily to refinement by treatment with a few tenths of a percent of dry Fullers earth, or Attapulgus clay. This was discussed in detail in previous chapters.

About askarel transformers, after years of normal service life and having continued satisfactory performance, question (difficult to answer) arises as to how high may be the power factor. Also, how low may be the volume resistivity. The case histories given in the preceding chapter seem helpful in arriving at an answer.

Doble Engineering suggests to their clients that, "When used askarel is found to have a power factor of 2.0 percent or more, the cause of high power factor should be determined." (This refers to power factor measured at 20°C. and 60 cycles.) Doble qualifies this suggestion stating, "If the high power factor is caused by water or other conducting matter, free chlorides or high neutralization number, the askarel is probably an operating hazard." Also, "If the high power factor is not due to these causes, it is probably not an operating hazard except that when the power factor is quite high, it may result in excessive heating of the device in which it is used."

0263228

TOWOLDMON0028682

Since heat resulting from power factor increase of the askarel in most any commercial transformer is negligible compared with heat generated by the core of the transformer, this consideration does not appear important.

If the suggestion were limited to a 2 percent power factor, it would appear low and probably subject to considerable objection. However, when stated as 2 percent or more, the intention and purpose of this suggestion justifies earnest consideration, although in absence of more knowledge, it appears that conclusive answer to this question is not at hand.

However, it should be apparent that when the power factor of the askarel is 2, 5, or 7 percent or higher at 20°C. and 60 cycles, and volume resistivity at 100°C. is 20 x 10^6 Ohm-cm. or lower, contamination is present. As it is likely that such a condition can be rectified by simple earth treatment and filtration, there should be little question about desirability of doing this purification work to assure the best possible performance of the transformer.

Arced Conditions

It is fortunate that there seem to be very few cases of significantly arced transformer askarel, as it is difficult to estimate the possible success of reclaiming the fluid. Particularly, it is not easy to lower the free and also the after corrosion chloride levels within the extremely low specification limits for new askarel.

0263229

TOWOLDMON0028683

Treatment with dry earth as usually used to refine contaminated askarel, probably will not rectify arced askarel. Special refinement, including hydrolysis of the spent scavenger material, water extraction of excess chlorides, treatment with wet earth, special drying and finally treatment with dry earth is required. The following example is considered typical:

During routine testing of a transformer filled with askarel, a short occurred in the winding, and the arc resulted in formation of easily seen carbon particles in the fluid. The following shows the ineffectiveness of dry earth treatment and the need for wet or water treatment to reclaim a sample of this material in the laboratory.

Passing the damaged fluid through filter paper failed to remove the carbon. The carbon was removed by filtering through paper fitted with a one-half inch pad of Attapulgus earth. At this stage, analysis indicated the following pertinent properties as compared with the specification limits:

PROPERTIES OF TRANSFORMER ASKARELS

Property	Specification	Sample
Inorganic chlorides	0.01 ppm. max.	0.25 ppm.
Acidity, mg. KOH/g.	0.010 max.	0.004
Moisture	30 ppm. max.	75 ppm.

Then 0.2 percent by weight of Attapulgus earth was added and the mixture held at 90°C. and agitated for two hours and filtered. This reduced the water to 15 ppm., but the chlorides remained at 0.25 ppm.

Another portion of the original sample was treated with 0.5 percent of earth, held at 50°C. and agitated for two hours and filtered. This lower temperature treatment reduced the water to only 60 ppm. and the chlorides remained at 0.25 ppm.

0263230

TOWOLDMON0028684

At this stage, the electrical properties were determined and found to be well within specification limits.

Property	Specification	Sample
Resistivity @ 100°C. x 10^9 Ohm-cm.	100	576
Power Factor @ 100°C. and 1,000 Cycles	----	0.18%
Dielectric Constant @ 100°C.	3.8 - 4.3	4.2

The above reclaiming tests were repeated using "wet" earth which contained 15 percent moisture. Again, the chlorides remained at the original level of 0.25 ppm., well out of specification.

Then a sample of the askarel was extracted with water, using 20 percent based on the weight of the dielectric fluid. This reduced the chlorides to 0.15 ppm., and a second aqueous extraction using 10 percent of water was required to reduce the chlorides to no detectable amount. The excess moisture was then removed by blowing with dry air and finally filtering through dry earth and filter paper.

Although transformer askarel is several times as expensive as mineral oil, the material is not a high cost item. Therefore, the economies of undertaking work as described above must be weighed against the cost of new askarel.

In any event a fair estimate of the reclaiming cost plus packaging, shipment to location for the work, the cost of several analyses involved, then repackaging in new containers and cost of return freight will indicate at least 50 percent of the cost of new askarel. Accordingly, usually the most practical expedient is to purchase new askarel to replace the arced material.

0263231

TOWOLDMON0028685

CHAPTER 12

DERMATOLOGY AND TOXICOLOGY

Skin Exposure

Aroclors, or askarels, accidentally spilled on the skin do not cause an acute toxicity hazard, nor will they cause serious irritation. The materials should be washed from the skin with soap and water. Prolonged skin contact should be avoided. If work clothes become impregnated with these fluids, they should be removed and washed.

When sampling tank cars, canvas gloves and safety glasses, or goggles, should be worn. No special clothing is required, but the workers' garments should be laundered at least weekly and changed, if Aroclors or askarels are spilled on the clothes.

If accidental burns occur from contact with hot askarels, the burn should be treated the same as any ordinary burn. Aroclor, or askarel, adhering to the burned area need not be removed immediately unless treatment of the burn demands it in which case, soap and water, or repeated washings with a vegetable oil should be used. Accidental contact with the eyes results in painful irritation, but not permanent damage to the tissues or the sight. In event of such contact, the eyes should be flushed with a large amount of water for at least 15 minutes. The patient should then be referred to a physician who will treat with an ointment to soothe the eye.

0263232

TOWOLDMON0028686

Exposure to Vapors

Vapors from hot Aroclor, or askarel, have a degree of toxicity and should not be inhaled over a prolonged period of time. Experimental work on animals indicates that the maximum safe concentrations of vapors in work rooms is in the range of 0.5 to 1.0 mg. per cubic meter of air. Harmful amounts of the materials are readily detectable by odor and irritation to the eyes. Usually, people can detect concentrations of askarels in the amount of 1.0 mg. per cubic meter of air, which is the level regarded as the safe work room limit for an 8 hour day exposure.

Capacitor impregnations may be done at temperatures as high as 266°F. (130°C.). Following impregnation and draining the chamber, exhaust ventilation should be applied to the chamber to prevent askarel vapors entering the work room. Also, when opening a heated capacitor impregnating chamber, the workmen should wear a respirator during this short interval of exposure.

If transformer askarels are used at temperatures above 125° to 150°F. to fill an open transformer, exhaust ventilation should be provided in the immediate area.

The many years of satisfactory and safe use of Aroclors, or askarels, by the electrical industry for impregnating capacitors and filling transformers has demonstrated the industry's ability to handle these fluids without hazard to the workmen.

It is both simple and in line with "good housekeeping" and personal cleanliness to exercise the suggested precautions in all cases.

0263233

TOWOLDMON0028687

Vapors from a Severely Arced Askarel Transformer

Experimental data indicate that when askarel is decomposed by an electric arc, insignificant amounts of chlorine and phosgene gas are liberated. The gas is almost entirely hydrogen chloride, which is readily detectable by its odor and its irritating characteristics in even small amounts. Thereby, adequate warning of its presence is provided and significant amounts of fumes would be likely to cause a hazard only in a closed area. Individuals would not voluntarily expose themselves to serious toxic levels of the hydrogen chloride gas fumes.

0263234

TOWOLDMON0028688

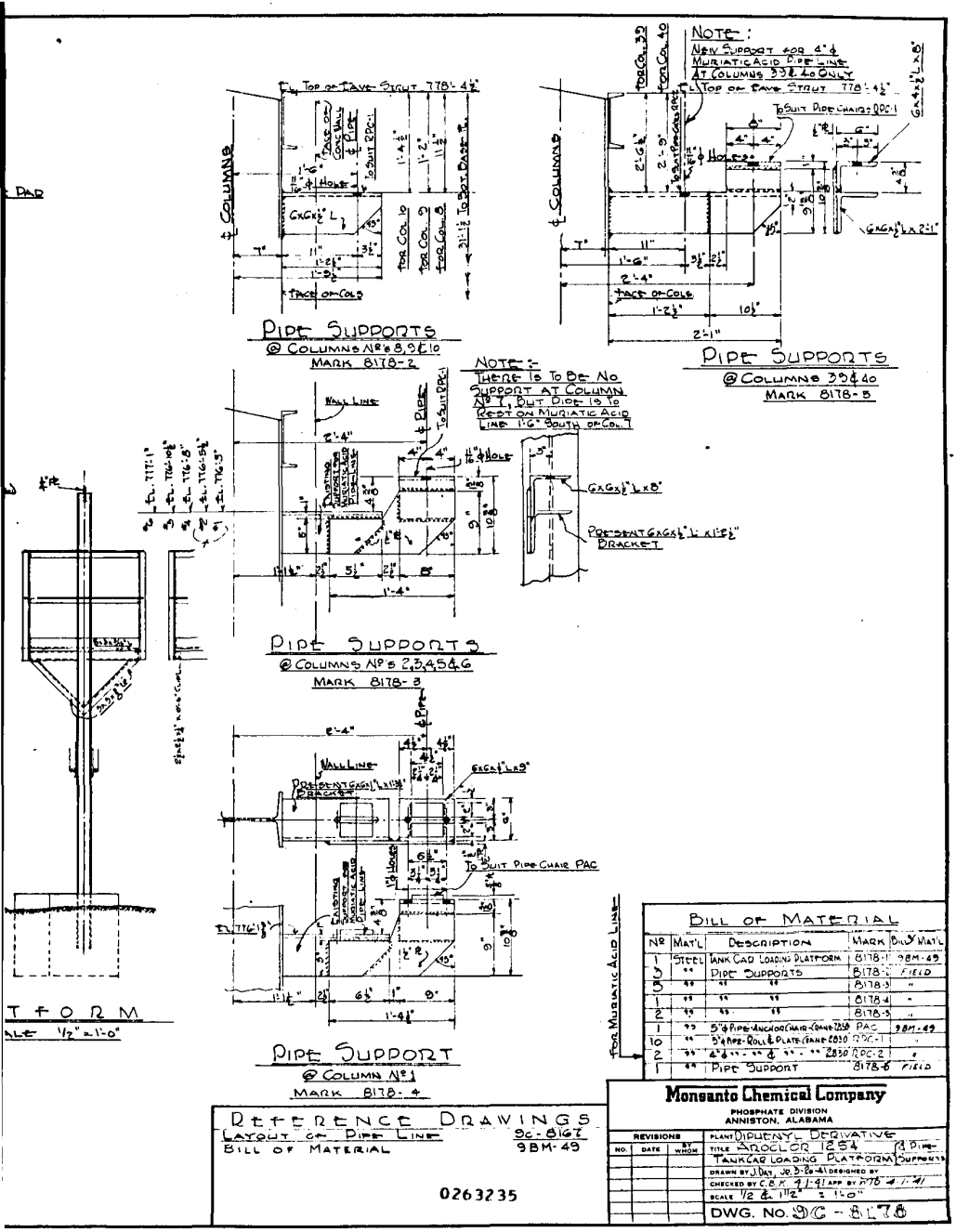

FOR MURIATIC ACID LINE

BILL OF MATERIAL

Nº	Mat'l	Description	Mark	Bill Mat'l
1	Steel	Tank Car Loading Platform	8178-1	9BM-49
3	"	Pipe Supports	8178-2	FIELD
5	"	" "	8178-3	"
1	"	" "	8178-4	"
2	"	" "	8178-5	"
1	"	5" ϕ Pipe-Anchor Chair-Crane 2850	PAC	9BM-49
10	"	5" ϕ Pipe-Roll & Plate-Crane 2830	RPC-1	"
2	"	4" ϕ " " & " " 2830	RPC-2	"
1	"	Pipe Support	8178-6	FIELD

REFERENCE DRAWINGS

Layout of Pipe Line	9C-8167
Bill of Material	9BM-49

Monsanto Chemical Company
PHOSPHATE DIVISION
ANNISTON, ALABAMA

REVISIONS		
NO.	DATE	BY WHOM

PLANT: DIPHENYL DERIVATIVE
TITLE: AROCLOR 1254 TANK CAR LOADING PLATFORM & PIPE SUPPORTS
DRAWN BY J. DAY, JR. 3-20-41 DESIGNED BY
CHECKED BY C.B.K. 4-1-41 APP. BY WTB 4-1-41
SCALE 1/2 & 1 1/2" = 1'-0"
DWG. No. 9C-8178

0263235

TOWOLDMON0028689

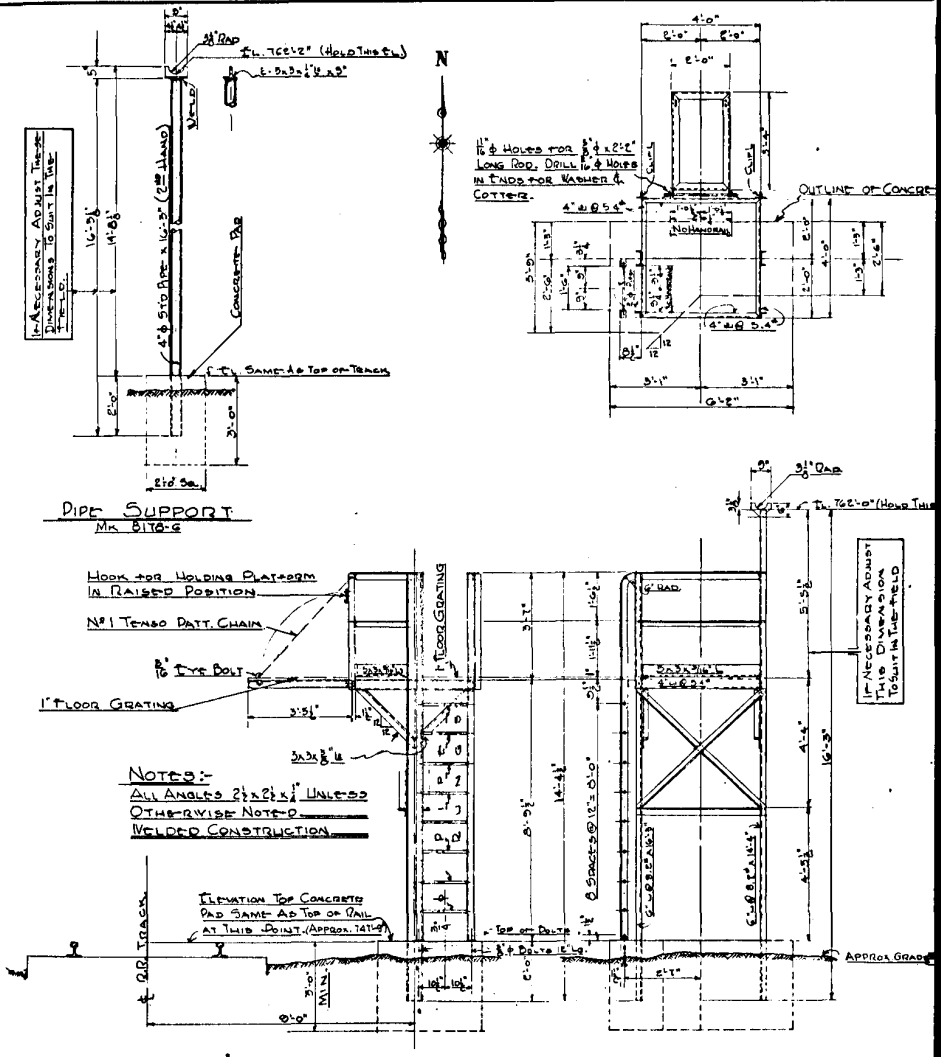

0263236

TOWOLDMON0028690

BILL OF MATERIAL (FOR 2 GUAGES)				
No	MATL	DESCRIPTION	MARK	BILL NO.
7 LIN. FT.	STL	4" STD. STL. PIPE	P-2	STORES
2	C I	4"x9" STD FLG	F-1	9BM54
2	C I	4" STD. CAP	C-1	STORES
24 SQ. FT.	W S	1½" STD. PIPE	P-1	"
4	M.I	1½" UNION	U-1	"
2	STL.	¾" H PELS ½" LG	H-1	"
2	BRASS	¾" SCRD. GLOBE VALVE	V-1	"
2	RUBBER	4" I.D. x 6⅜ OD GASKET	G-1	"
4	STL	½" ⌀ U BOLTS	8278-1	FIELD
2		VAREC FIG. 255 GUAGE	G-2	9BM54
4	STL	½" x 1½" BOLTS WITH SQ. NUTS	B-1	STORES
16	"	⅝" x 2¾"	B-2	"

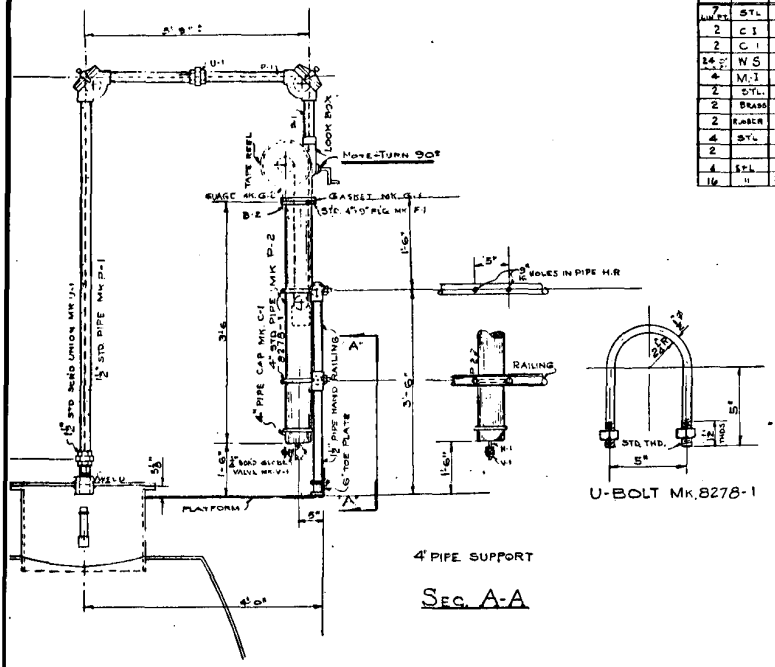

4" PIPE SUPPORT

SEC. A-A

SIDE ELEVATION

REFERENCE DRAWINGS	
WALKWAYS & STAIRS TO PLATFORM	9C-8199
PLATFORM OVER-CRUDE-DIPHENYL-CATCH TANK	9C-8153
BILL OF MATERIAL	9BM54

Monsanto Chemical Company
PHOSPHATE DIVISION
ANNISTON, ALABAMA

REVISIONS			
NO.	DATE	BY WHOM	PLANT DIPHENYL PLANT
			TITLE CRUDE DIPHENYL CATCH TANK VAREC GAUGE.
			DRAWN BY W.R.C. 5-14-41 DESIGNED BY
			CHECKED BY J.W.K.P. 5-16-41 APP. BY W.T.D. 5-16-41
			SCALE 1" = 1'-0"
			DWG. No. 9 C-8278

0263237

TOWOLDMON0028691

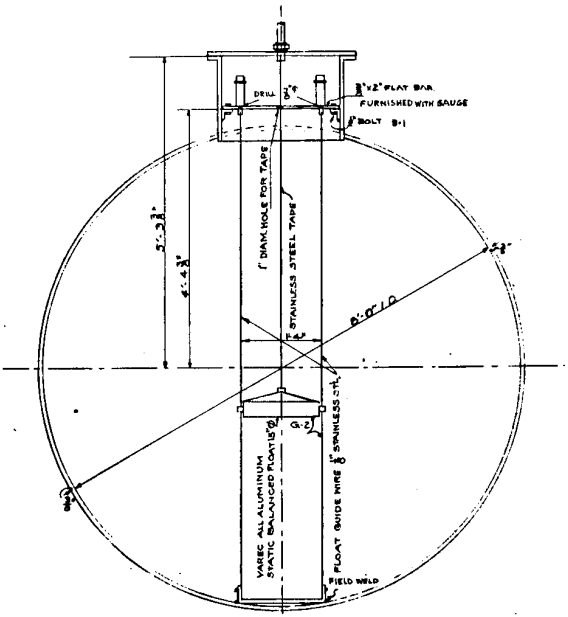

END ELEVATION

0263238

TOWOLDMON0028692

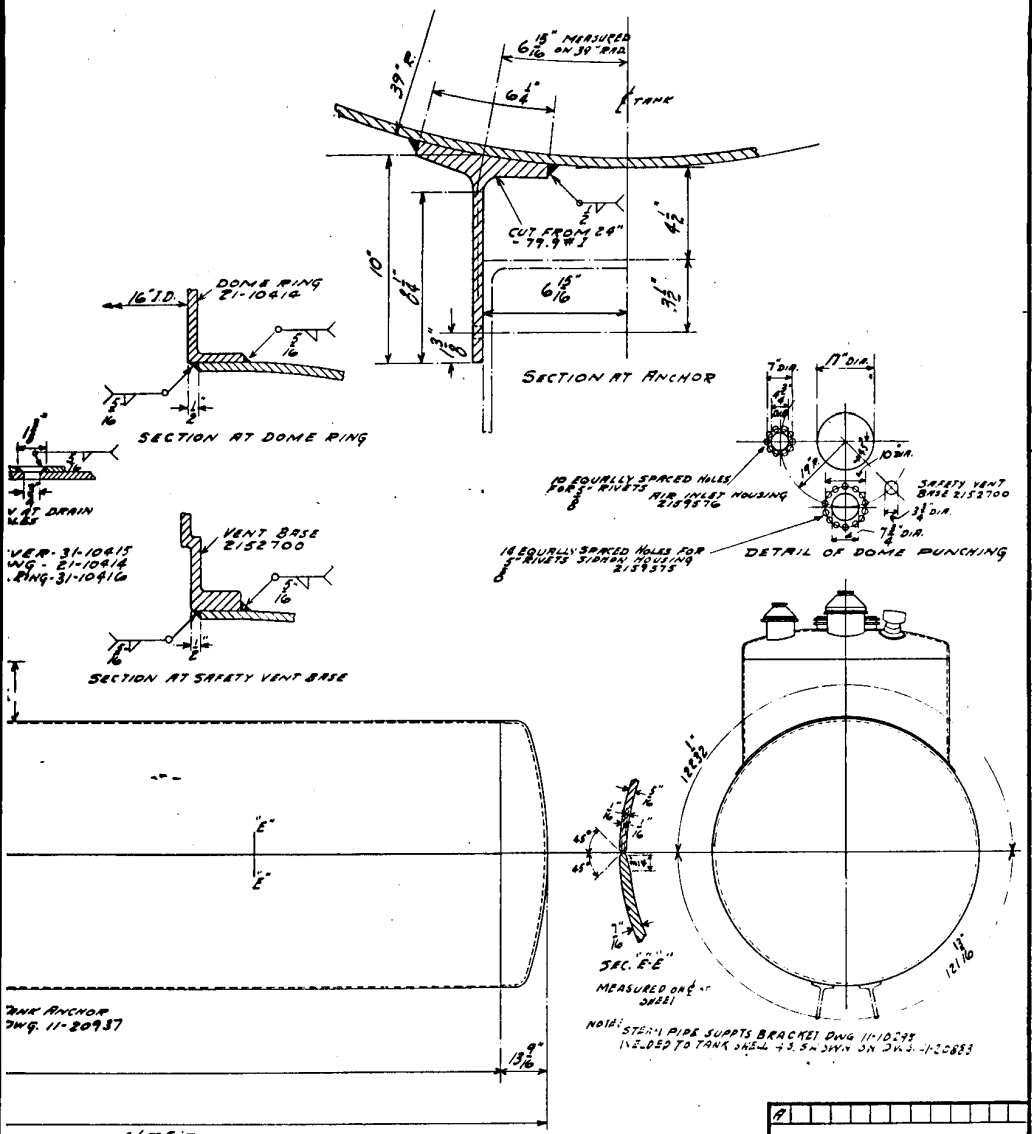

NOTE:-

7" DIA. HOLE FOR SYPHON DWG. 21-20894

IS EQUALLY FOR 5" RIVETS

WG. 2582155

TANK TO BE BUILT IN ACCORDANCE WITH SPEC. I.C.C. 103-W INCLUDING STRESS RELIEVING AS A UNIT, AFTER ALL ATTACHMENTS TO BE JOINED TO THE STRUCTURE BY WELDING HAVE BEEN WELDED IN PLACE, AND X-RAYING EVERY PORTION OF ALL LONGITUDINAL AND CIRCUMFERENTIAL JOINTS OF TANK SHELL.

ALL PLATES IN ACCORDANCE WITH A.A.R. SPEC. M115 FLANGE QUALITY WITH A MAX. CARBON CONTENT OF .30%

ALL LONGITUDINAL AND CIRCUMFERENTIAL SEAMS AND ANCHORS TO BE WELDED BY THE UNION-MELT PROCESS. ALL OTHER WELDED JOINTS TO BE ELECTRIC ARC-WELDED.

ALL HOLES FOR CASTINGS TO BE PUNCHED 1/8" SMALL AND REAMED TO FIT.

A

31-20847

8000 GAL. 103 W TANK

0263239

a.c.f.

TOWOLDMON0028693

Ref - A/59458 & 31-15471

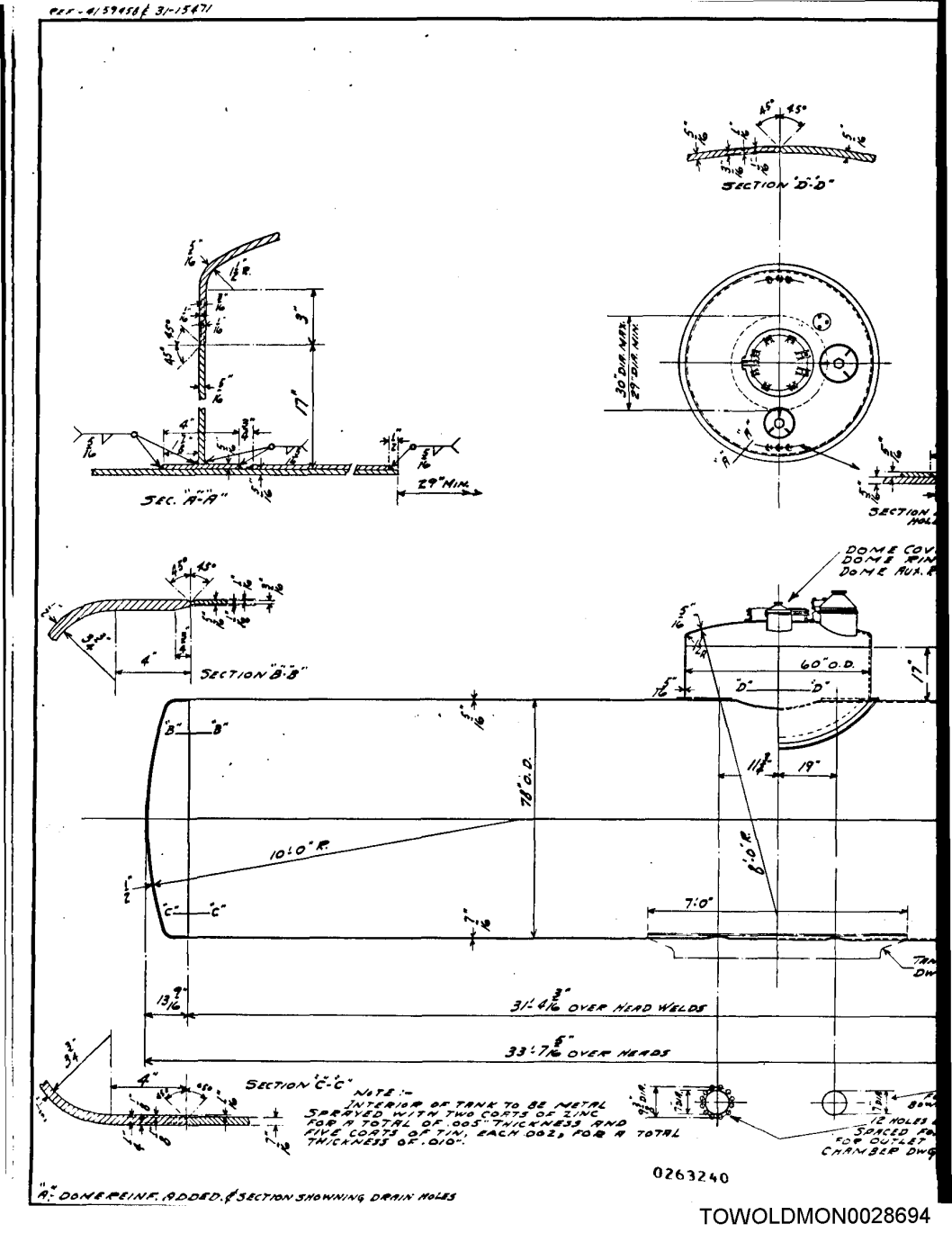

0263240

"A" DOME REINF. ADDED. & SECTION SHOWNING DRAIN HOLES

TOWOLDMON0028694

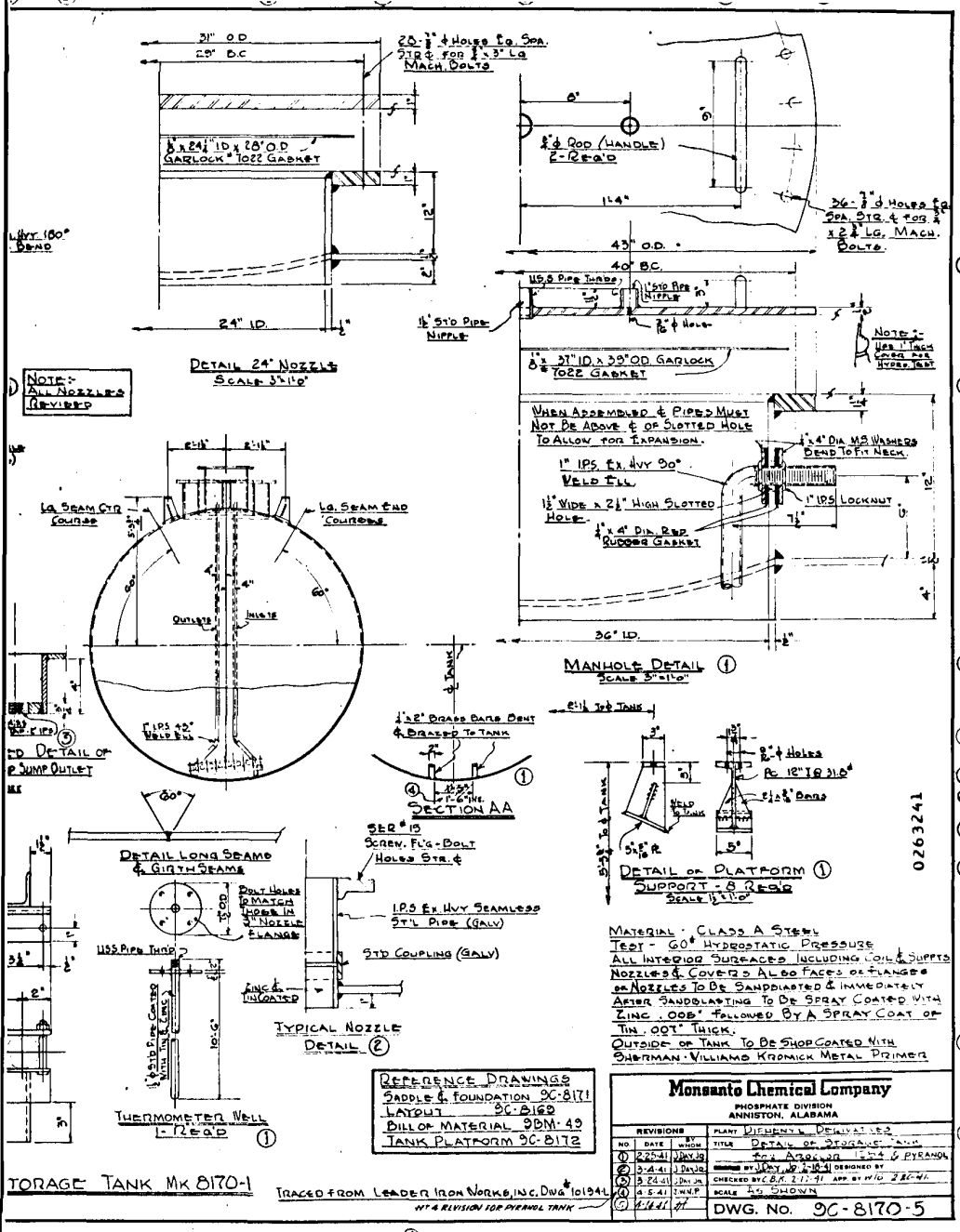

TOWOLDMON0028695

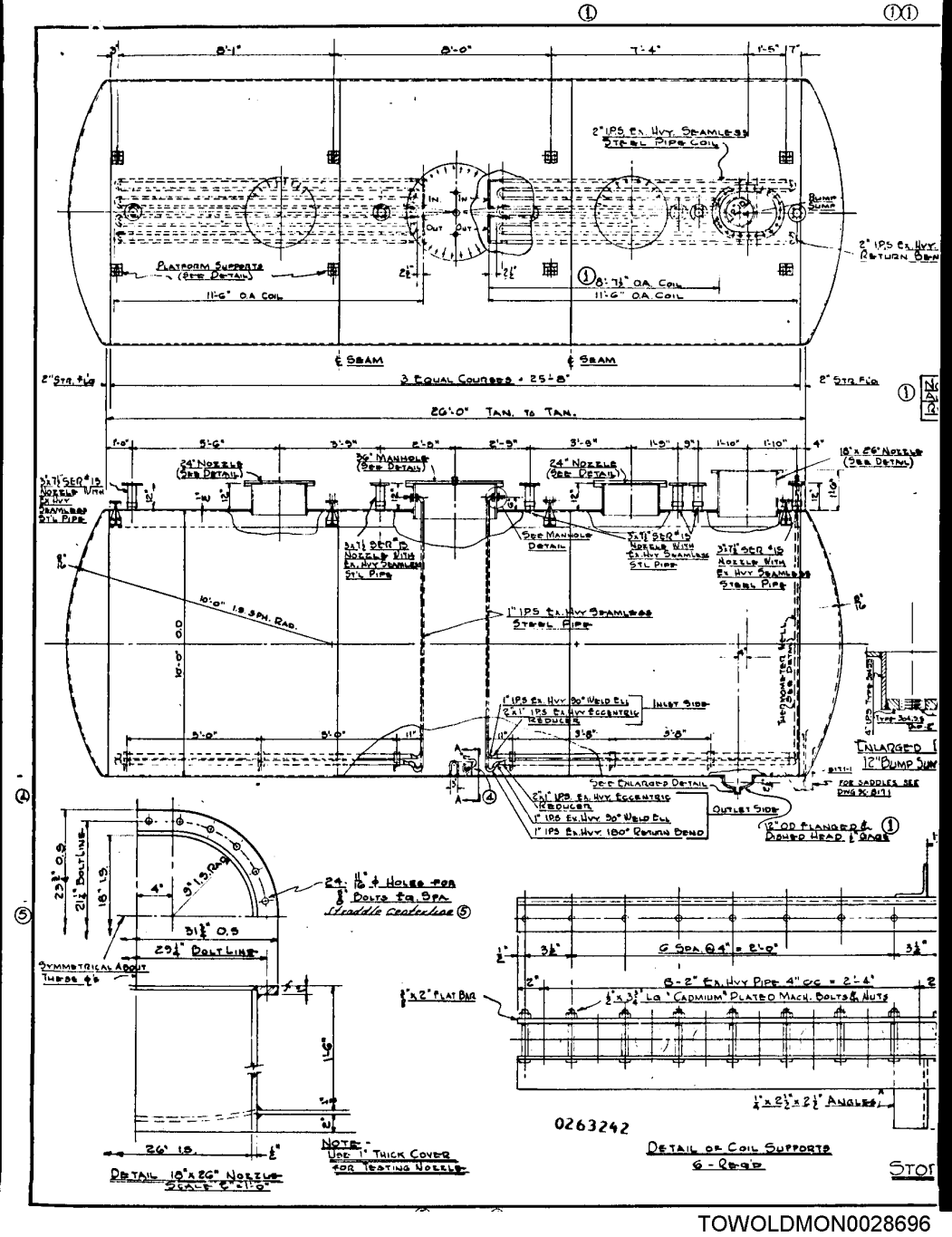

TOWOLDMON0028696

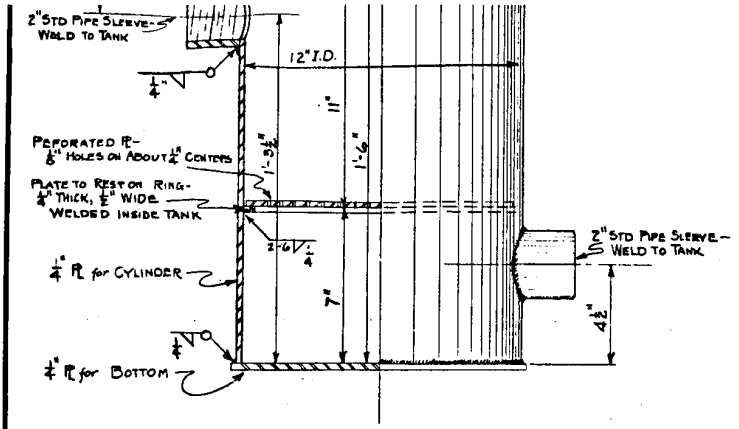

VENT TANK- MARK 8248-1

SCALE - 3" = 1'-0"

REFERENCE DRAWINGS-

PIPE LAYOUT-
STORAGE TANK-9C-8170
BILL OF MATERIAL- 9BM-89
PLATFORM FOR 1260 TANK- 9C-8235

Monsanto Chemical Company

PHOSPHATE DIVISION
ANNISTON, ALABAMA

REVISIONS		
NO.	DATE	BY WHOM

PLANT ANNISTON

TITLE DIPHENYL DERIVATIVES- VENT TANK & -
FOR 1260 STORAGE TANK

DRAWN BY A.D.-9/24/41 | DESIGNED BY J.W.N.P.

CHECKED BY J.W.N.P. 9-23-41 APP. BY W.T.D. 9-23-41

SCALE 3" = 1'-0"

DWG. No. 9C-8248

0263243
TOWOLDMON0028697

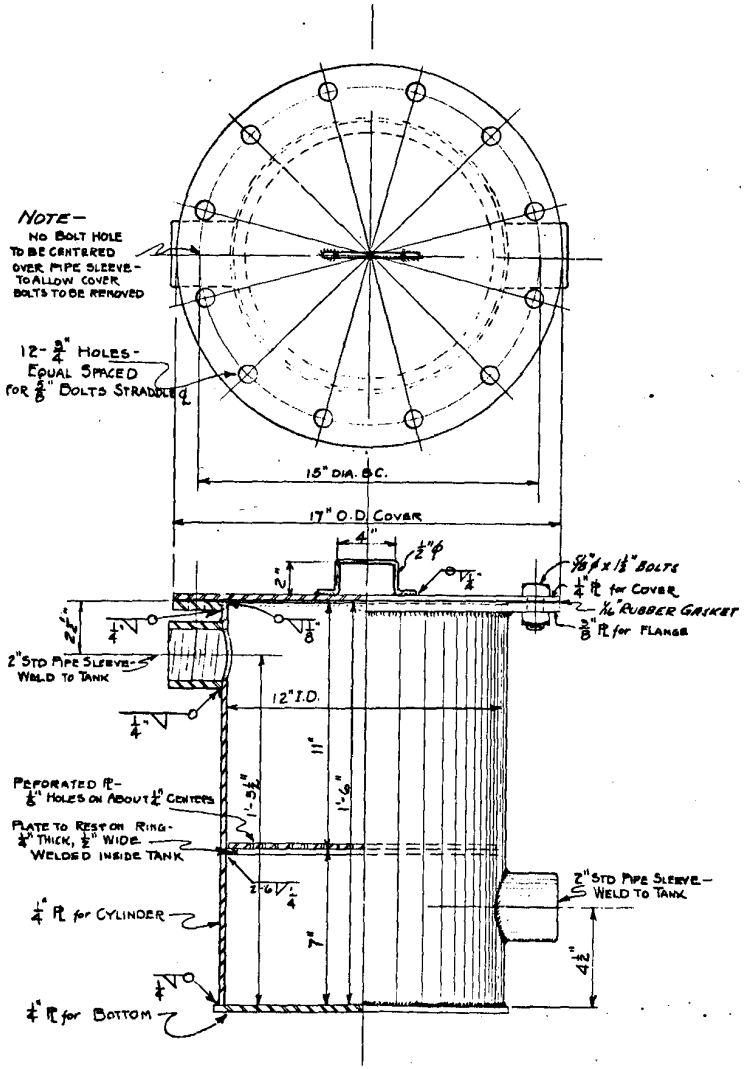

VENT TANK- MARK 8248-1

SCALE - 3" = 1'-0"

0263244

TOWOLDMON0028698

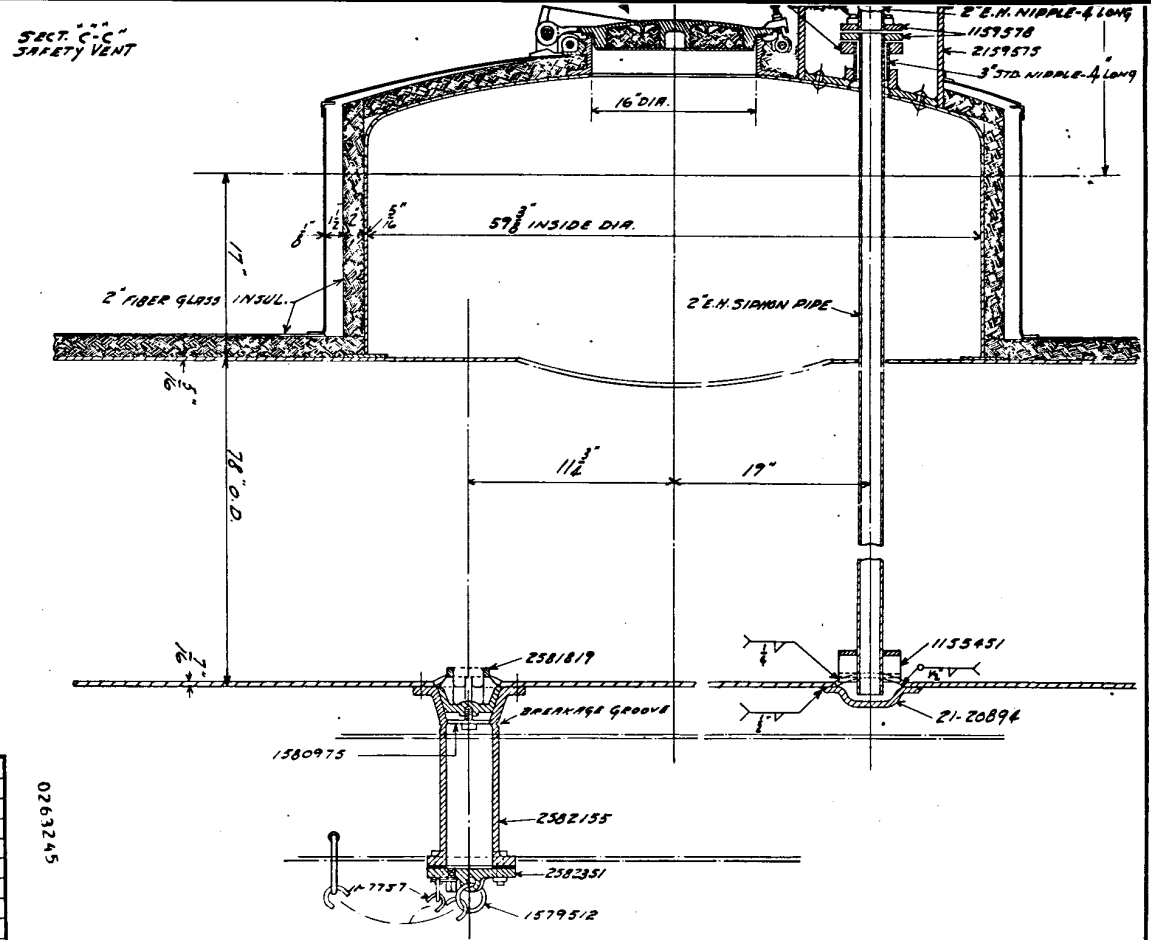

31-20848
DOUBLE SIPHON ASS'Y.

0263245

TOWOLDMON0028699

0263246

TOWOLDMON0028700

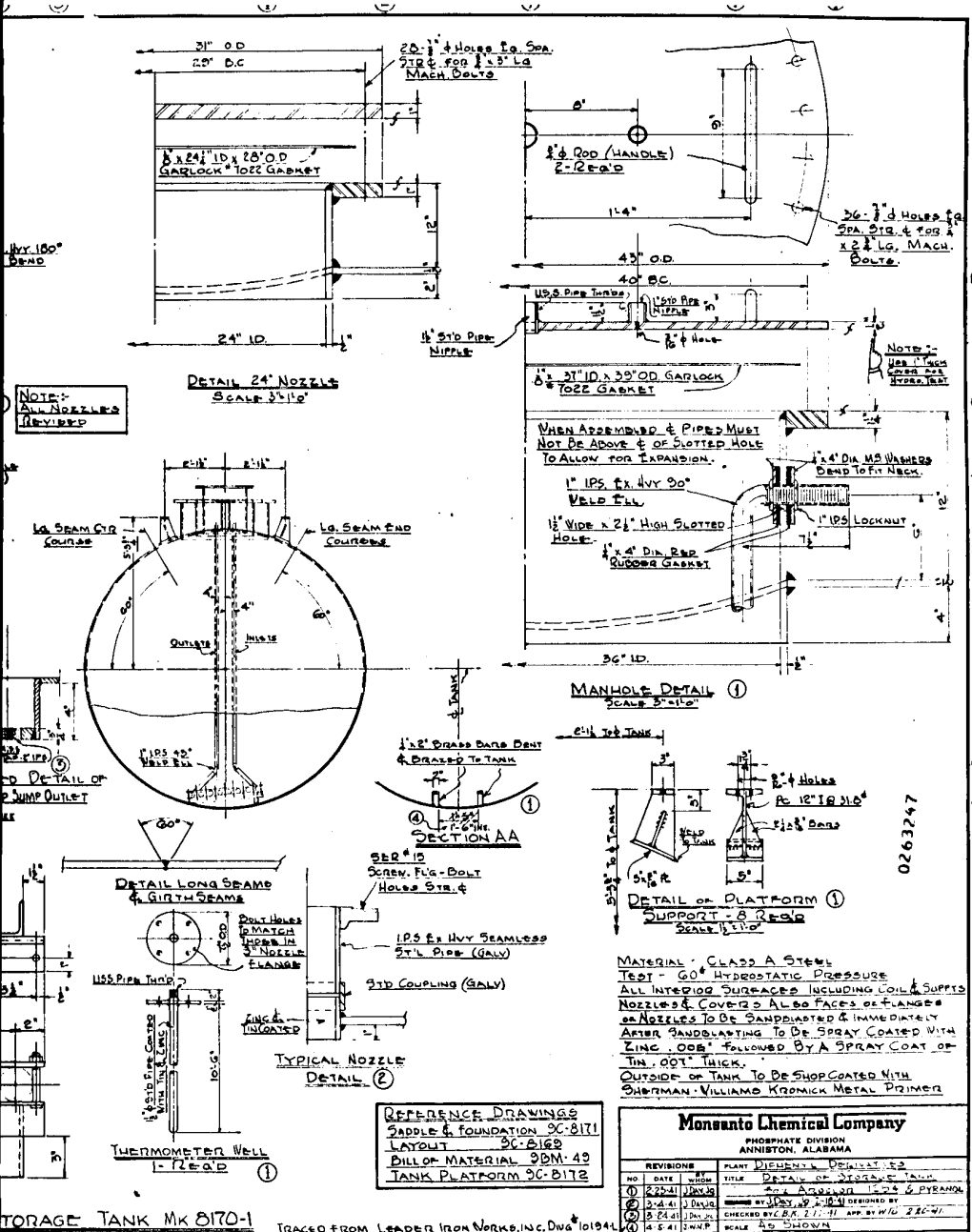

Material:- Class A Steel
Test - 60# Hydrostatic Pressure
All Interior Surfaces Including Coil & Supts Nozzles & Covers Also Faces of Flanges on Nozzles To Be Sandblasted & Immediately After Sandblasting To Be Spray Coated With Zinc .008" Followed By A Spray Coat of Tin .001" Thick.
Outside of Tank To Be Shop Coated With Sherman-Williams Kromick Metal Primer

Reference Drawings

Saddle & Foundation	9C-8171
Layout	9C-8169
Bill of Material	9BM-49
Tank Platform	9C-8172

Monsanto Chemical Company
PHOSPHATE DIVISION
ANNISTON, ALABAMA

Revisions		
No	Date	By Whom
①	2-25-41	J Dav JS
②	3-4-41	J Dav JS
③	3-24-41	J Dav JS
④	4-5-41	J W N P
⑤	4-14-41	JT

Plant Diehlstadt Division
Title Detail of Storage Tank for Aqueous 15% & Pyranol
Designed By J Dav JS & H/G 3-26-41
Checked By C.B.A. 2-1-41 App. By H/G 3-26-41
Scale As Shown
Dwg. No. 9C-8170-5

Storage Tank Mk 8170-1
Traced from Leader Iron Works, Inc. Dwg 101941
Mk 4 Revision for Pyranol Tank

TOWOLDMON0028701

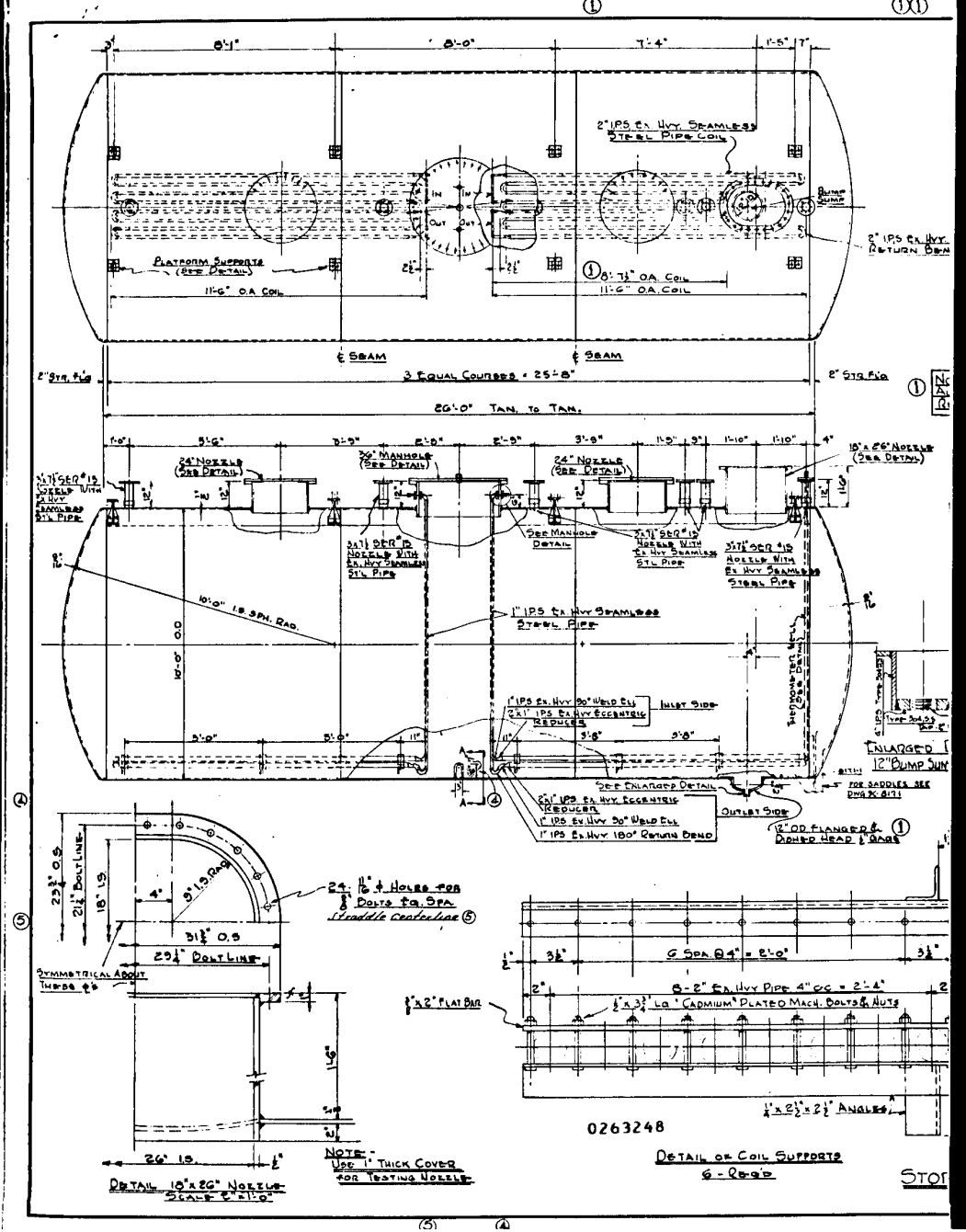

TOWOLDMON0028702