forty years ago. Portable charcoal heaters were the first type to be standardized by the American railroads. These heaters have a cylindrical shape and hold about 30 lb of small charcoal briquettes in a magazine at the top. The briquettes are fed by gravity to the fire bed near the base of the heater. The fire bed is supported by a fixed grate and a small compartment at the base of the heater provides space for ashes. A shut-off slide located at the bottom of the fuel hopper is used to extinguish the heater, and the fuel remaining in the fire pot continues to burn until consumed. These heaters are placed on the ice grate in the end bunkers and are chained to the bunker sides and grates to prevent tipping. Employees are instructed to open the ice bunker hatches a few minutes before entering a bunker to service these heaters since they *give off carbon monoxide* gas.

The portable thermostatically controlled alcohol heater (Fig. 3) has now almost completely replaced the portable charcoal heaters. This heater was designed about ten years ago in response to the need for adequate temperature control and complete combustion. The heater consists of a five gal capacity cylindrical tank which serves as the heater base and to which are attached the wick, fuel gage, thermostat, filler cap, chimney assembly and spring hooks. The alcohol fuel is drawn by capillary action to the top of the compressed glass fiber wick where combustion occurs. The thermostat assembly includes a bimetal coil which controls the burning rate by regulating the height of the snuffer plate above the wick surface in response to the thermostat setting. The thermostat control pointer can be set from 30 F to 60 F (and up to 70 F on the latest model) in increments of 2½ deg and may be locked in a *pilot* position, where the snuffer plate completely covers the wick. In this position, burning occurs only at the slot in center of snuffer plate and this constitutes the pilot flame. The rated heat output with methanol as the fuel is 6000 Btu per hr at full burning and 600 Btu per hr at pilot burning.

During the past few years, methanol has been largely replaced by a new fuel, consisting of a 2 to 1 by volume mixture of methanol and isopropanol, which has certain advantages

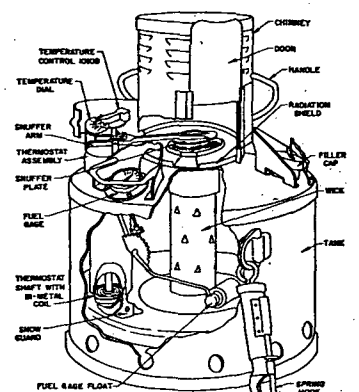


Fig. 3.... Portable Thermostatically Controlled Alcohol Heater

including increased rate of heat output and increased heat content per tank of fuel. Both the fuel mixture and methanol are unique liquid fuels in that they burn with no smoke and with only negligible amounts of carbon monoxide gas being released. A number of high output alcohol heaters that incorporate a copper heat conductor around the wick jacket, have recently been placed in service and have a rated heat output of 13,000 Btu per hr using the fuel mixture. The amount of alcohol purchased by the railroad industry for use in refrigerator car heaters is estimated at 2½ million gal per year.

Underslung heaters have been installed in relatively few American cars, but are standard for Canadian cars since they are ideally suited for the top bunker type car without fans used extensively by Canadian railroads. They are attached to the underside of the car directly below one of the door openings and hold about 50 lb of charcoal which is gravity fed into a fire pot surrounded by a copper coil. The copper coil contains ethylene glycol which is heated and circulated by gravity through a long loop of pipe laid around the perimeter of the car floor under the floor racks. The gases of combustion from the heater are discharged to the atmosphere- and it is unnecessary to enter the car to service the heater. The heat output is controlled manually by regulating the air supply damper. Many Canadian cars are equipped with somewhat similar heaters which use propane gas for fuel.

The heaters described above, and also special oil stoves are commonly used to preheat cars before loading.

Most of the mechanical refrigerator cars are equipped with electric heaters for temperature control and defrosting, having a total heating capacity of about 6000 watts. A few of the mechanical refrigeration systems furnish heat by automatically reversing the refrigerant cycle so as to send the hot refrigerant gases from the compressor directly to the evaporator coil.

## Temperature Indicating Devices

Two types of temperature indicating devices have been used in refrigerator cars. Both consist of a liquid filled metallic bulb located on the floor and/or the ceiling of the car and connected by a flexible metal capillary tube to a dial indicator mounted outside the car. One type uses mercury under a pressure of 300 to 600 psi, a Bourdon tube to actuate the dial pointer and a bimetallic strip to compensate for temperature changes in the case. The other type uses toluene under a pressure of 16 to 60 psi and three brass bellows to actuate the dial pointer. One of the bellows responds to the liquid in the bulb and connecting capillary tube. Liquid in a second capillary tube, which is not connected to the bulb but runs parallel to and is the same length as the first tube, actuates a second bellows which compensates for temperature changes in the tubing. The third bellows compensates for temperature changes in the case.

Since the Canadian railroads use tariff rules for perishable protective services that are based on inside temperature control, nearly all of the Canadian cars are equipped with temperature indicating devices. The bellows type with two dial pointers (one for top and one for bottom temperatures) is standard for Canadian cars.

# MECHANICAL REFRIGERATION EQUIPMENT

In addition to the usual mechanical refrigeration system components, the mechanical refrigeration equipment installed in railway refrigerator cars includes an internal combustion engine for furnishing the power required to operate the system. Over 95 percent of the present mechanical cars have an



all-electric drive system consisting of a main generator, coupled to the engine, which furnishes power to several electric motors. The remaining cars (90 percent of which are of the *RPM* type) have a direct drive system and obtain mechanical power directly from the engine.

With the exception of a few experimental cars having underslung units, all mechanical cars have a louvered engine compartment at one end which houses most of the mechanical refrigeration equipment. The compartment is separated from the loading space by an insulated bulkhead and is about 4 ft wide, the width of the car in length (9 to 10 ft) and the same height as the car (9 to 10 ft).

The system is usually divided into major sub-assemblies including an engine-generator assembly, a compressor-condensing assembly, evaporator coil and blower assemblies, a refrigerant control assembly, and an electrical control panel. Some of the direct-drive systems have all the components combined into a single unit which is mounted in the machinery compartment on a sliding base for ease in installing, inspection and replacement.

Special care and consideration has been given in the selection and mounting of all components because of the vibration and impact forces obtained in freight car service.[11]

The design refrigeration capacity for a mechanical refrigerator car depends primarily on the type of refrigeration service for which the car is intended. The importance of also obtaining the proper balance between refrigeration capacity and the heat leakage rate for the car has been shown by laboratory tests.[12]

## Power and Drive Equipment

Only diesel engines have been used in mechanical refrigerator cars, except that with the direct-drive systems, spark-ignition engines using propane or diesel fuel have also been used. The diesel engines include the two- and four-cycle types with 2, 3, 4, or 6 cylinders having a rated output ranging from 16 to 50 hp for electric drive systems and down to 12 hp for direct-drive systems. While most of the diesel engines have a vertical in-line cylinder arrangement, about 25 percent of the mechanical cars use a horizontally-opposed two-cylinder diesel engine. Most of the direct drive systems use a two-speed, horizontally opposed, two-cylinder, air-cooled, spark-ignition engine with propane fuel.

The generators used with electric drive systems are connected directly to the engine and provide 220 volt, 3-phase, 60 cycle current with a rated output from 12 to 25 kw. A majority of the mechanical refrigerator cars have a 20 kw generator connected directly to a 34 hp, 2-cycle diesel; but the trend is toward smaller engines tailored more closely to the actual capacity requirements.

Significant improvements[10] in the power and drive equipment have been made in many of the newer mechanical cars. A static type rectifier charger has replaced the common belt-driven battery charging generator, and nickel cadmium batteries are being used. The brushless type alternator is being used as the main generator.

One of the latest developments[12] to reduce engine maintenance and fuel costs is two-speed operation of the engine. Full engine speed is used for *pulldown*, and after the car temperature is within a few degrees of the temperature control setting, low speed operation is used. This system was first employed with direct-drive systems. With electric drive systems, 60-cycle operation is obtained at full speed, and 40-cycle operation is obtained at low speed. Modifications were made so that the generator, battery charging system, electric controls, temperature controls, relays, starters, etc. would all function at both 40 and 60 cycles.

Another improvement[13] provides automatic unloading of the engine (by dropping the refrigeration load) rather than engine shutdown when the engine water temperature rise is due to high altitude or unusual ambient air temperature conditions rather than to engine trouble. If the water temperature continues to rise, indicating engine trouble does exist, the usual high engine water temperature safety control shuts off the fuel. Low oil pressure and engine overspeed protection devices are standard equipment.

## Refrigeration Components

Refrigerant 12 is used as the refrigerant in all but about 25 mechanical cars, which have an azeotropic mixture of Refrigerant 12 and Refrigerant 152a as the primary refrigerant and Trichloroethylene as the secondary refrigerant. About 60 percent of the mechanical cars have a single refrigerant compressor driven by a 7½, 10, or 15 hp electric motor. Nearly 35 percent of the cars have 2 compressors, each of which is driven by a 5 or 7½ hp electric motor. With the dual compressor system, there are also 2 condensers, 2 receivers, and 2 sets of valves. The condensing systems are in parallel and can operate independently. About 100 mechanical cars have a tandem compressor arrangement with 2 compressors driven by separate belts from a common electric motor. The remaining mechanical cars (about 5 percent of the total) have a single refrigerant compressor belted or connected directly to the engine through a splined joint, clutch or flexible connection.

The compressors are of several designs[11] ranging from the two-cylinder belt-driven type through a six-cylinder semi-hermetic type and including multiple cylinder open types and hermetic types. Many of the compressors are equipped with unloaders on all or a portion of the cylinders to obtain fully unloaded starting conditions. The cylinder unloaders are also used for refrigerant capacity control.

Both the condenser coil and the evaporator coil are usually constructed of copper tubes and aluminum fins. Electric heating elements are usually placed in each of several copper tubes within the evaporator coil in the electric drive systems. An electric heater is also placed in contact with the drain pan and drain traps to keep them free from ice and insure discharge of the melted frost to the outside of the car. This heater is turned on and off simultaneously with the evaporator coil defrost heater during the defrost cycle and, during the car heating cycle, is automatically out of the electrical circuit.

With direct-drive systems, heat for defrosting with timer operation and heating of the car under thermostat control are provided by compressor hot gas discharge. In addition to passing hot gas from the compressor through the evaporator, two methods have been used for increasing the compressor discharge pressure so as to provide additional car heating. One method for raising the head pressure, which is used on unitary mechanical refrigeration systems, is to automatically reduce the air flow across the condenser by means of a damper in the exhaust hood. Another method consists of passing the hot gas (as it goes to the evaporator) through a portion of a specially designed receiver so as to boil the liquid refrigerant in the receiver. The latter system also provides a re-evaporator (see Fig. 4) where a coil with hot engine coolant supplies heat to vaporize any liquid refrigerant returning to the compressor from the evaporator.

## Controls and Accessory Equipment

A refrigerant control assembly is frequently mounted on the machinery compartment bulkhead and contains the items shown in Fig. 4.