Position of PFAS in product
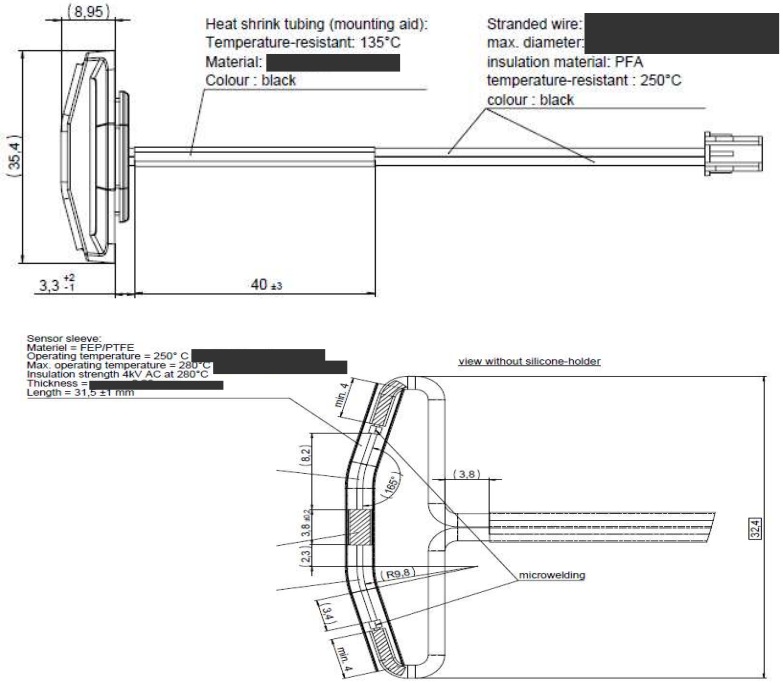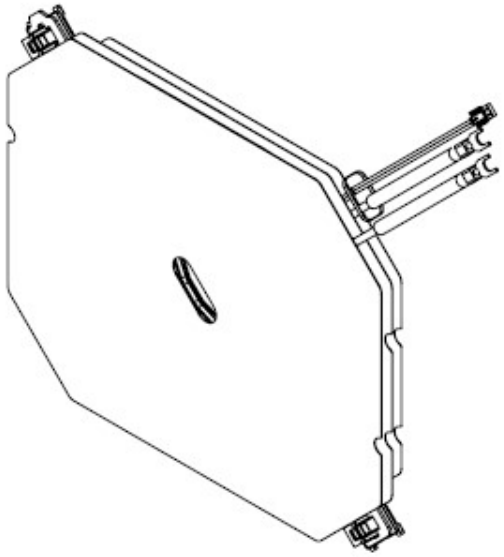
- Example Coil: