PLAINTIFF'S EXHIBIT

CT-907

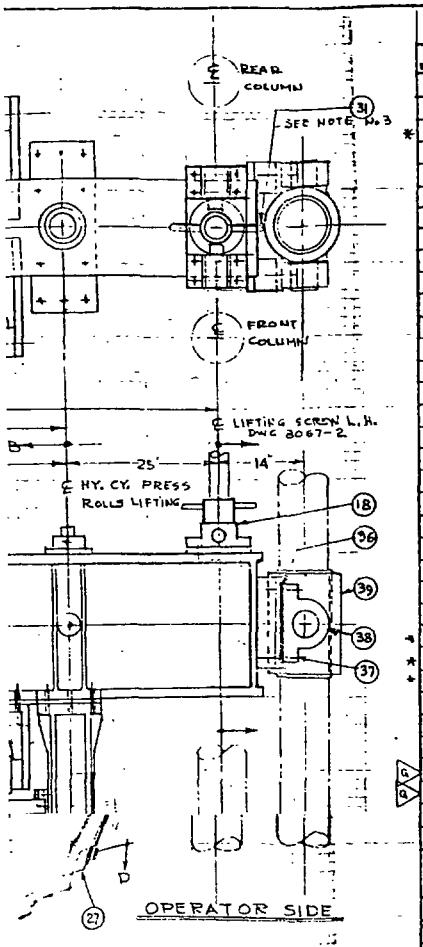

BILL OF MATERIAL - MATERIAL FOR ONE ONLY

AS REQ'D	AT REQ'D	AT REQ'D	PART NO	PART	MATERIAL	DWG No.
		X	1	PRESSURE BEAM	SUB-ASS'Y	
		5	2	HY. CYLINDER	FOR DOLLY ROLLS (5 B. 5 S.)	8127-1
		2	3	HY. CYLINDER	PRESS ROLLS LIFTING (5 B. 7 S.)	8122-2
		8	4	CAP SCREW	½-13 NC x 2" LG.	
		4	5	TIE ROD		8072-7
		2	6	CONNECTING LINK		8072-13
		4	7	PIN		8072-8
		4	8	LOCK NUT	1¼-12 NF HEP. JAM NUT THN	
		20	9	LOCK WAS.	FOR 1" BOLTS	
		20	10	CAP SCREW	1"-8 x 2½" LG.	
			11			
			12			
			13			
			14			
		5	15	PIN		60-131-11
			16			
			17			
		A	18	LOCK SUB	ASS'Y	8067-12
		16	19	CAP SCREW	¾-16 NF x 2½ LG	
		2	20	YOKE		8770-1
		1	21			
		2	22	SPHERICAL SEAT		8866-3
			23			
		8	24	BOLTS	1"-8 NC. x 5" LG. W. HEX NUT & LW	
		4	25	DOWEL	½ DIA x 3" LG.	
		1	26	PRESS ROLL	BEARING BLOCK FIXED	9830-1
		1	27	" "	" " " EXPANSION	9830-2
		2	28	PRESS ROLLS		11,079-15
		5	29	DOLLY ROLLS	SUB ASS'Y	60-132-1
		2	30	TIE BAR		8067-25
		2	31	SQ. HEAD SET SCREW	¾-10 NC x 3" LG. W. LOCK NUT	
		1	32	FRONT	FELT GUIDE ROLL	8419-1
		1	33	REAR	FELT " "	8419-2
			34			
			35			
		10	36	SHIMS		8150-9
		4	37	BOLTS	¾-10 NC x 3½" LG	
		2	38	BEARING	PILLOW BLOCK	8080-1
		1	39	GUIDE	BEARING	8080-4
		2	40	SPLIT HOUSING	BEARINGS	8080-11
		16	41	SCREWS	⅝-11 NC. x 1½ LG.	
		1	42	PRESSURE	BEAM	8070-1
			43			
			44			
		20	45	CAP SCREWS	⅝-11 NC x 3" LG.	
			46			
			47			
			48	CAP SCREWS	1"-8 NC x 3" LG.	
			49			

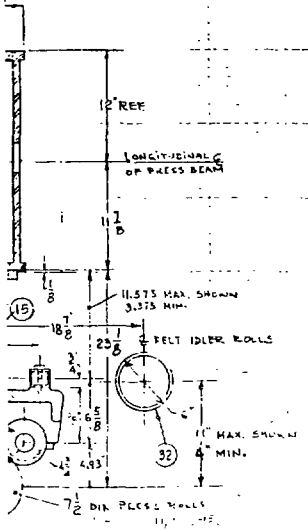

8083

NOTES:-(1) THIS DRAWING SHOULD BE USED IF WE CHANGE FELT DRIVE AS PER EWA* 69-5 SPECIFICATION, DWG No. 11,527, DATE 4-23-1971
(2) ITEM MARKED WITH * WILL BE NEW AS PER DATE OF THIS DWG.
(3) ALLOW .005" CLEARANCE BETWEEN PARTS *31 & 39 AT ASSY. (CHECK WITH FEELER GAUGE)

PLANT No	JOB No	REF. DWG & REMARKS	BY	DATE	EWA
58		HY. DIAGRAM 18-L-8386			
257		8084, 8584, 17-D-8205-8206	A Smith	6-23-69	69-5

CERTAIN-TEED PRODUCTS CORPORATION
PIPE DIVISION

PLANT 257A HILLSBORO TEXAS PRESS SEC.
PRESSURE BEAM SUB-ASS'Y
13'-0" PIPE MACHINE

NO	CHANGE	BY	APP	DATE
5				6-23-69
4				9-23-71

DR E.DUN | CHK DR 6-25-69 | CK'D | APP'D Smith DATE 9/16/1980 | SCALE 1" = 1½"-0"
DWG. OFFICIATED BY | PRINT ISSUED | DWG NO. 8083 | REV NO. G

CTD028830

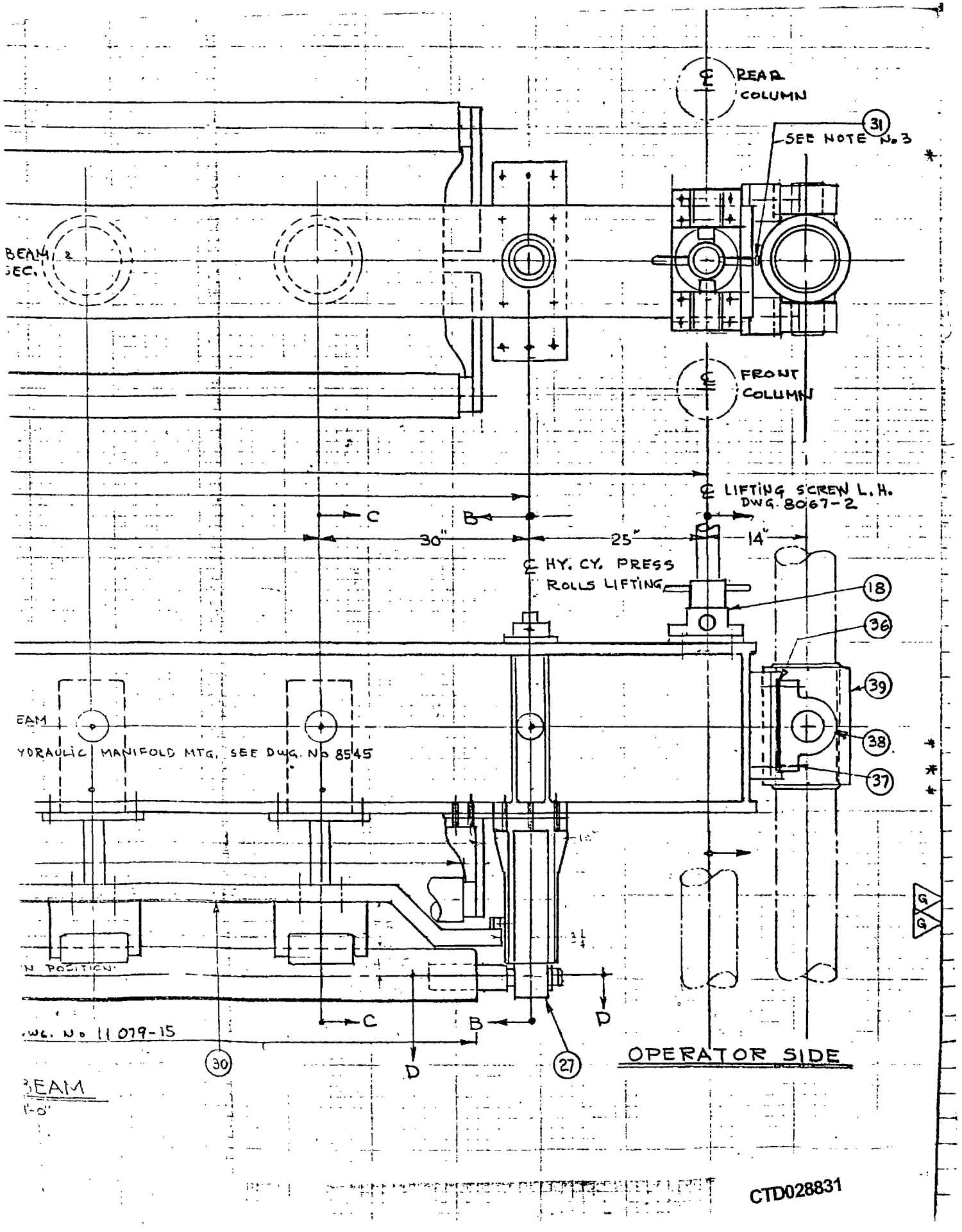
℄ REAR COLUMN
31
SEE NOTE No. 3
BEAM & SEC.
℄ FRONT COLUMN
℄ LIFTING SCREW L.H. DWG. 8067-2
C
B
30"
25"
14"
℄ HY. CY. PRESS ROLLS LIFTING
18
36
39
38
37
EAM
YDRAULIC MANIFOLD MTG. SEE DWG. No 8545
N POSITION
WG. No 11079-15
C
B
D
D
30
27
OPERATOR SIDE
BEAM
1'-0"
G
G

CTD028831

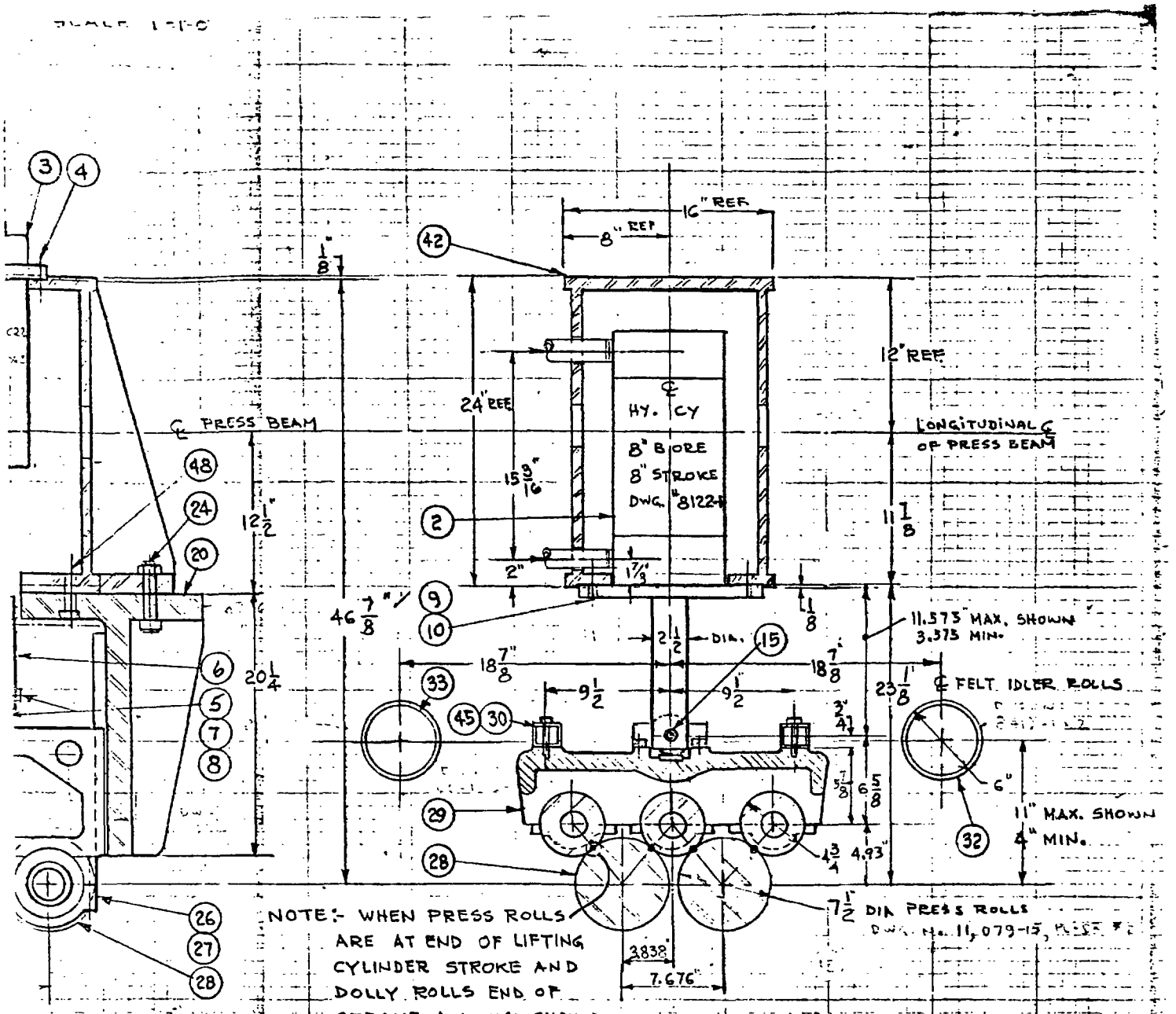

NOTE:- WHEN PRESS ROLLS ARE AT END OF LIFTING CYLINDER STROKE AND DOLLY ROLLS END OF STROKE ALLWAYS SHOULD BE 1/8" CLEARANCE BETWEEN PRESS ROLLS AND DOLLY ROLLS. (DESIGN REQUIREMENT).

SECTION "C-C"

ON "B-B"

No	CHANGE
G	DWG NO 8419-1&2 REVISION B SPIRAL RUBER COVERET ROLLS.
4	REDRAWN, PRESS ROLL DRIVG CH TO FELT ROLL DRIVG

CTD028832

14'-C 5/8 PRESS ROLLS FACE REF. DWG. No 11 079-15

28 29

1 PRESS BEAM

SCALE 1"=1'-0"

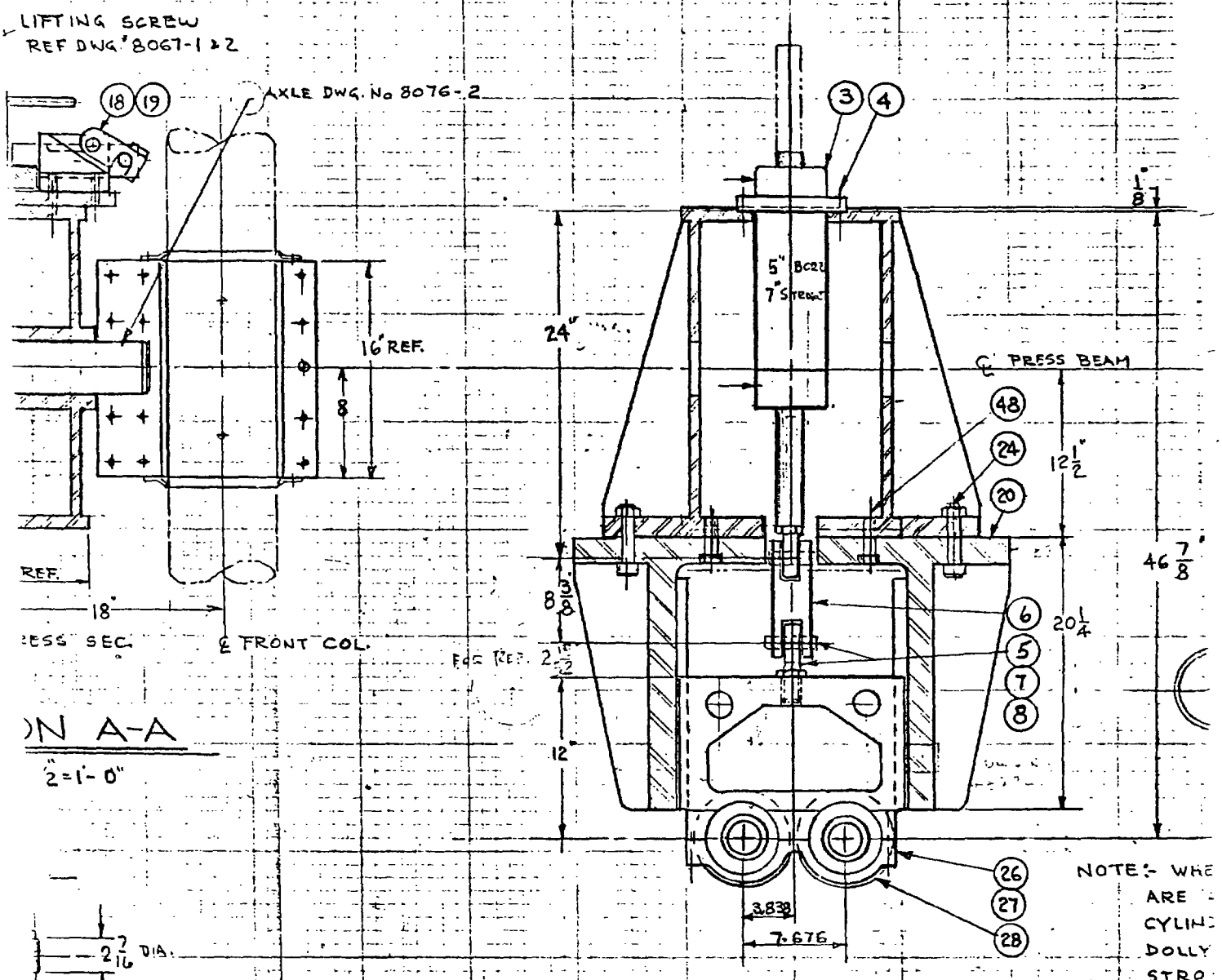

ON A-A

2=1'-0"

NOTE:- WHE
ARE
CYLIN
DOLLY
STRO
BE 1/8
PRES
ROLLS

SE

SECTION "B-B"

Y (TYPICAL)

CTD028833

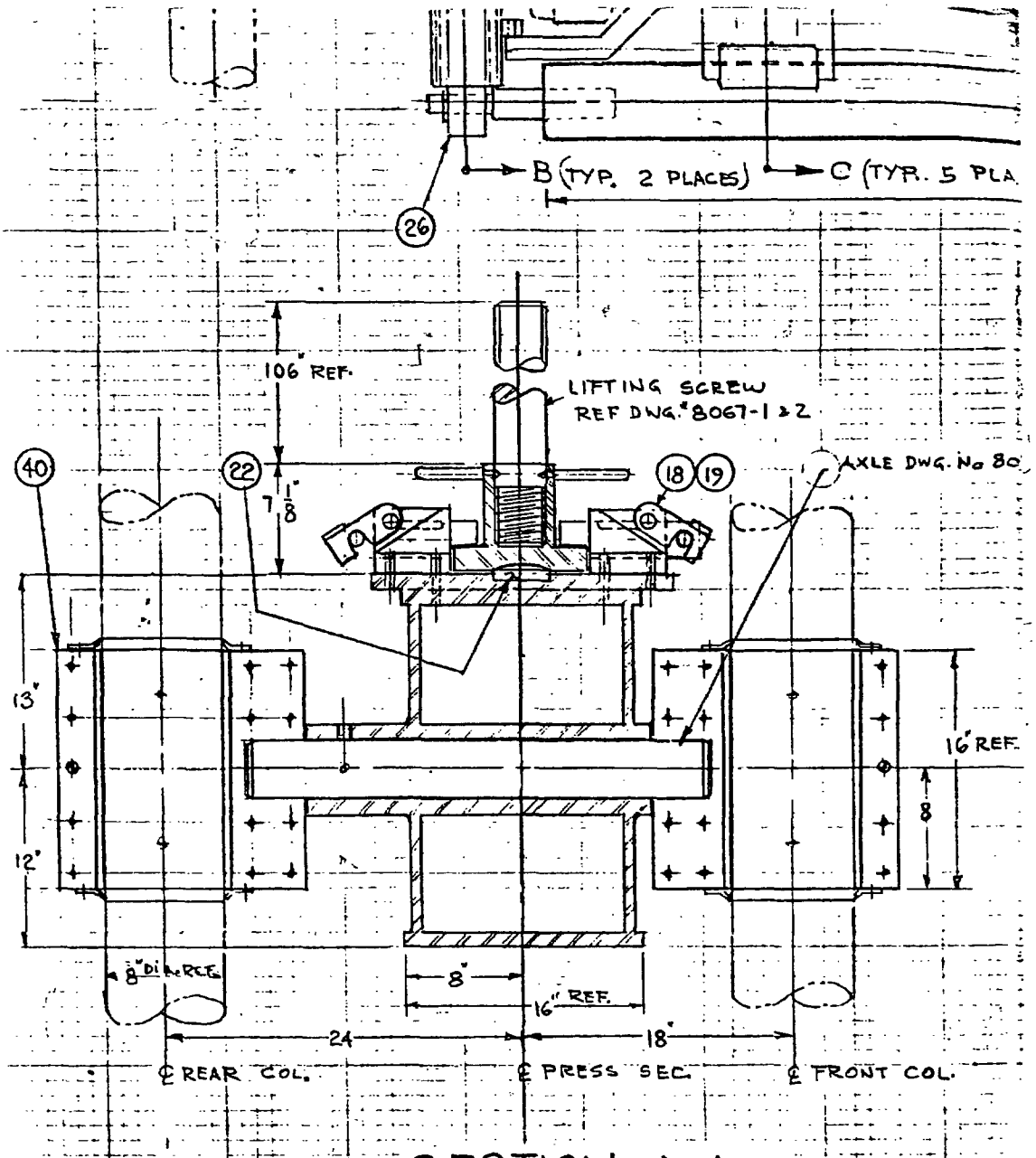

SECTION A-A

SCALE 1½"=1'-0"

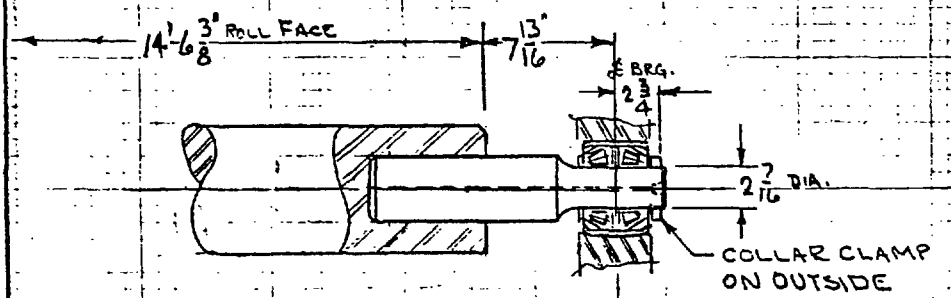

SECTION "D-D"

NOTE: ONE ROLL SHOWN ONLY (TYPICAL)

CTD028834

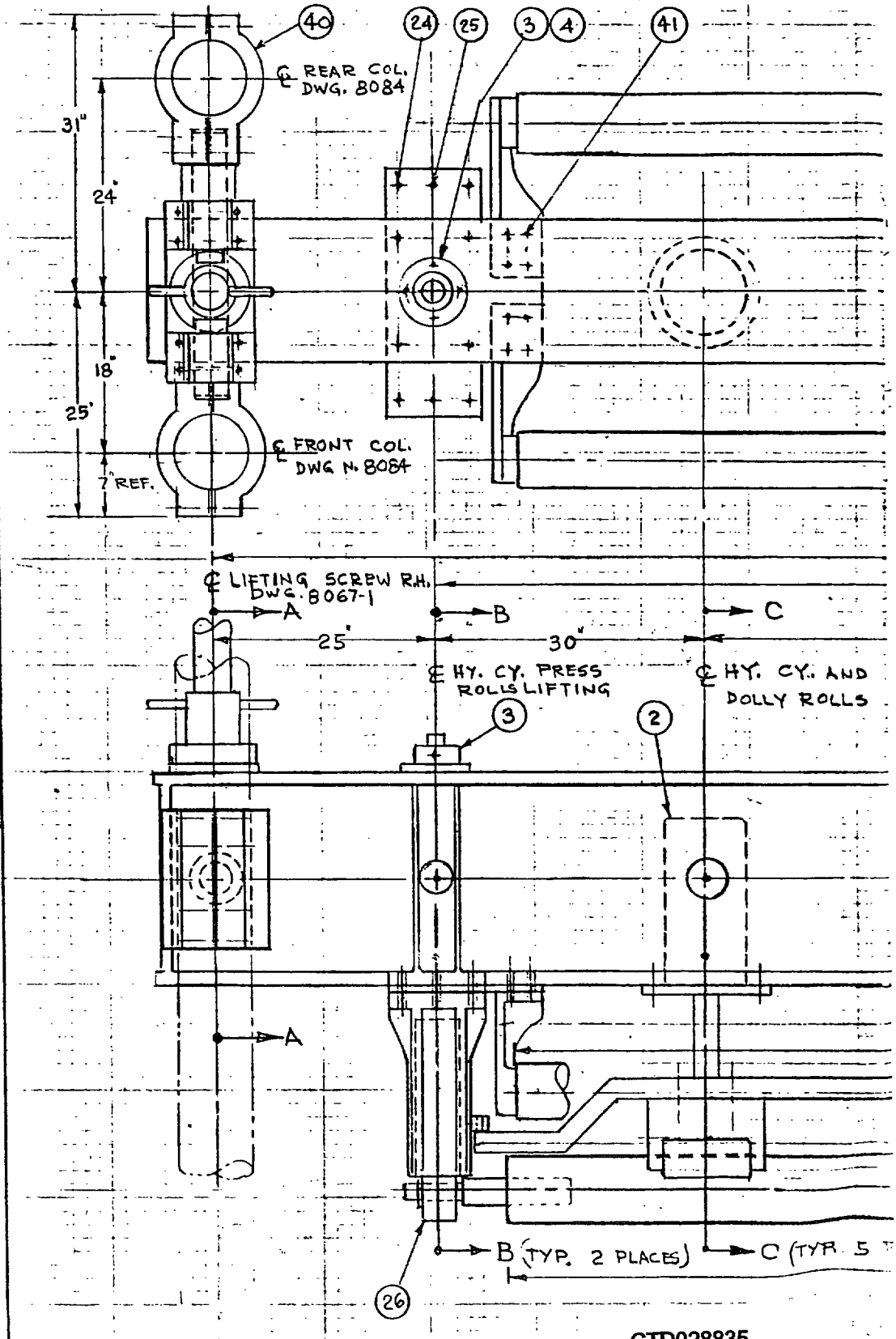
40
24
25
3
4
41
℄ REAR COL. DWG. 8084
31"
24"
18"
25"
7" REF.
℄ FRONT COL. DWG N. 8084
℄ LIFTING SCREW R.H. DWG. 8067-1
A
B
C
25"
30"
℄ HY. CY. PRESS ROLLS LIFTING
℄ HY. CY. AND DOLLY ROLLS
3
2
A
B (TYP. 2 PLACES)
C (TYP 5
26
CTD028835

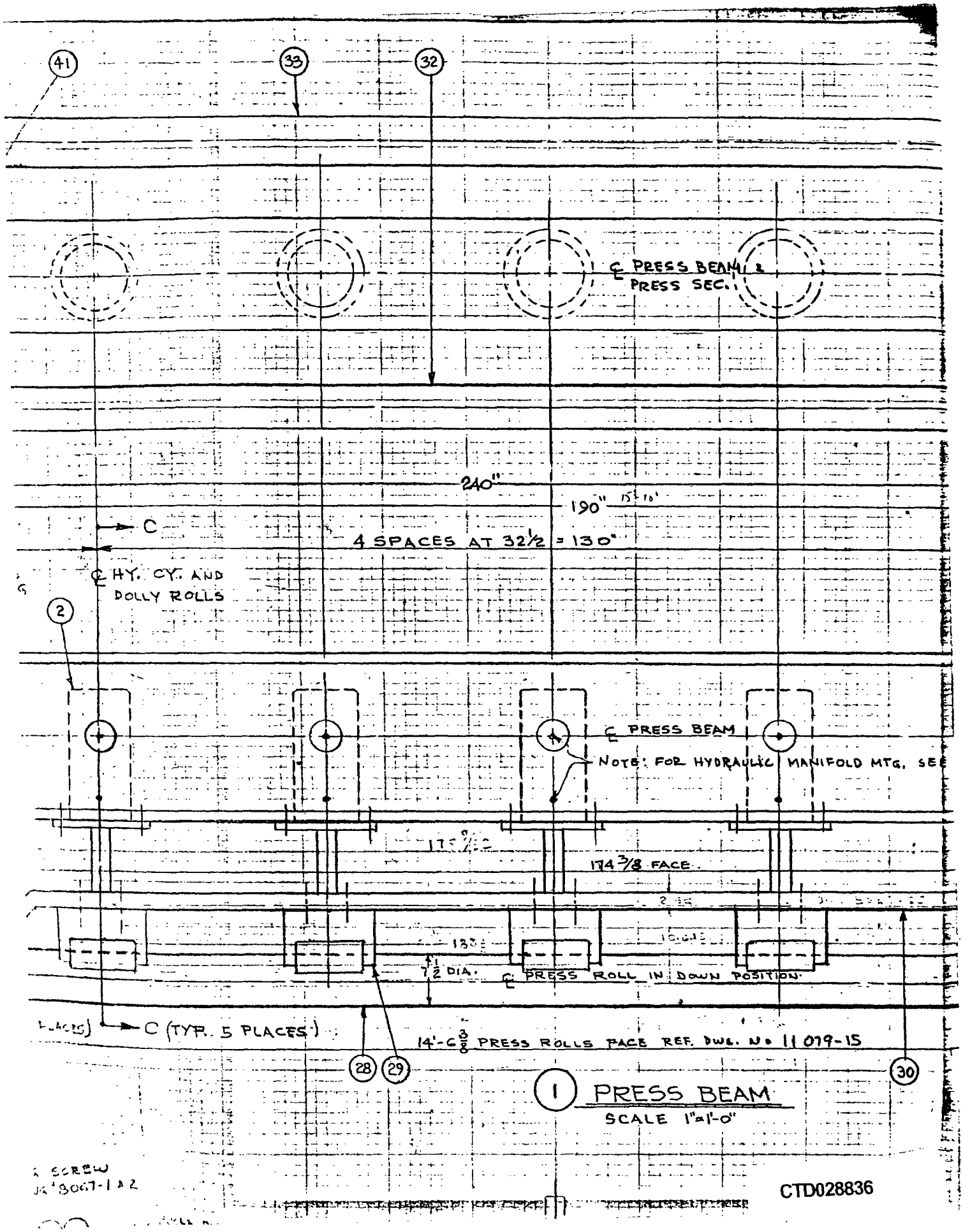
41
33
32
℄ PRESS BEAM & PRESS SEC.
240"
190"
C
4 SPACES AT 32½ = 130"
℄ HY. CY. AND DOLLY ROLLS
2
℄ PRESS BEAM
NOTE: FOR HYDRAULIC MANIFOLD MTG. SEE
174 3/8 FACE
7½ DIA.
℄ PRESS ROLL IN DOWN POSITION
C (TYP. 5 PLACES)
14'-6 3/8 PRESS ROLLS FACE REF. DWG. No 11 079-15
28
29
30
1 PRESS BEAM
SCALE 1"=1'-0"

CTD028836