PLAINTIFF'S EXHIBIT
CT-1607

American Water Works Association

AWWA C402-77

(Revision of
C402-75)

AWWA STANDARD

for

ASBESTOS-CEMENT TRANSMISSION PIPE, 18 IN. THROUGH 42 IN., FOR WATER AND OTHER LIQUIDS

First approved by AWWA Board of Directors Jan. 26, 1975.
This edition approved Jan. 30, 1977.

AMERICAN WATER WORKS ASSOCIATION
6666 West Quincy Avenue, Denver, Colorado 80235

CTD014720

Committee Personnel

The Standards Committee on Asbestos-Cement Pressure Pipe, which reviewed and approved this standard, had the following personnel at the time of approval:

R. S. BRYANT, *Chairman*
J. L. WARDEN, *Vice-Chairman*
T. R. GILLEN, *Secretary*

Consumer Members

S. C. BAKER, Naval Facilities Engineering Command, Alexandria, VA	(NAVFAC)
P. J. BRADY, Director of Utilities, Portsmouth, VA	(AWWA)
R. S. BRYANT, Department of Water & Power, Los Angeles, CA	(ASCE)
F. G. DENSON, Works & Operations Department, Winnepeg, Manitoba	(AWWA)
J. R. HENDRICK, Water Department, Fort Worth, TX	(AWWA)
J. E. JOHNSON,* U.S. Bureau of Reclamation, Denver, CO	(BUREC)
R. W. KING, Water Utilities, San Diego, CA	(AWWA)
R. A. MARCHAND, Water Department, Warren, OH	(AWWA)
J. L. WARDEN, U.S. Bureau of Reclamation, Denver, CO	(BUREC)

General Interest Members

G. C. ANDERSON, Insurance Services Office, New York, NY	(ISO)
R. A. BARROWS, C. E. Maguire, Inc., Waltham, MA	(NEWWA)
V. R. BICKEL, Department of Environmental Health, Albuquerque, NM	(APWA)
S. L. BISHOP,* Metcalf & Eddy, Boston, MA	(NEWWA)
C. L. FRICK,* Insurance Services Office, New York, NY	(ISO)
R. S. HOLMGREN, JR., James M. Montgomery, La Jolla, CA	(AWWA)
F. A. OBERT, Metcalf & Eddy, Boston, MA	(WPCF)
J. S. SLICER, Factory Mutual Research, Norwood, MA	(FMR)
M. R. SUCHOMEL, Underwriters Laboratories, Northbrook, IL	(UL)
W. TAGGART, Wright-McLaughlin Engineering, Denver, CO	(ASCE)

Producer Members

A. E. ALPINE, Cement Asbestos Products Co., Birmingham, AL	(AWWA)
F. T. DUFFY, The Flintkote Company, Akron, OH	(AWWA)
T. R. GILLEN, Johns-Manville Sales Corp., Denver, CO	(AWWA)
J. C. JACKSON, Association of A/C Pipe Producers, Washington, DC	(AACPP)
A. I. LEFF,* Certain-Teed Products Corp., Valley Forge, PA	(AWWA)
W. R. SEIPT, Certain-Teed Products Corp., Valley Forge, PA	(AWWA)

*Alternate.

© Copyright 1977 by American Water Works Assn.
Printed in US

CTD014721

Table of Contents

SEC.		PAGE
	Foreword	
I	History of Standard	v
II	Information Regarding Use of This Standard	vi
III	Major Revisions	viii
	Standard	
1	**General**	1
1.1	Scope	1
1.2	Definitions	1
1.3	Affidavit of Compliance	2
2	**Materials**	2
2.1	Composition	2
2.2	Physical Requirements	2
2.3	Chemical Requirements	3
3	**Design**	3
3.1	Pipe Classifications	3
3.2	Pipe Diameters	3
3.3	Pipe Lengths	4
3.4	Couplings	4
3.5	Joints	4
3.6	Wall Thickness	4
4	**Workmanship and Finish**	4
4.1	Imperfections	4
5	**Inspection, Testing, and Rejection**	5
5.1	Inspection	5
5.2	Physical Test Requirements	5
5.3	Retests (Physical) and Rejection	7
5.4	Test for Uncombined Calcium Hydroxide	7
5.5	Test Records	9
6	**Marking and Delivery**	9
6.1	Marking	9
6.2	Preparation for Shipment	9
	Tables	
F.1	Asbestos–Cement Pipe Type Recommended for Internal Water Aggressiveness	vii
F.2	Aggressiveness of Nonsulfate Acidic Soils to Asbestos–Cement Pipe	vii
F.3	Asbestos–Cement Pipe Type-Designation Chemical Resistance to Nonacid Soluble Sulfates in Water and Soils	viii
1	Pipe Classification	2
2	Design External Load	3
3	Wall Thickness Tolerances	4
4	Hydrostatic Tests	6
	Figures	
1	Crushing Test Assembly	6

CTD014722

Foreword

This foreword is for information only and is not a part of C402.

I—History of Standard

A new pipe material consisting of an intimate mixture of portland cement and asbestos fibers was introduced to the North American market in 1931 following a number of years of usage in other countries, particularly Italy.

In the ensuing years, this type of pipe gained popularity, and in 1949 AWWA established a committee on standard specifications for asbestos–cement pipe under the chairmanship of S. M. Clarke of Greeley and Hanson, Chicago.

The committee developed a standard for asbestos–cement water pipe, which was approved by the AWWA Board of Directors as a tentative standard, AWWA C400–53T, on May 15, 1953. In 1958, the committee was reactivated as Committee 8340D on Asbestos–Cement Pipe under the chairmanship of Roy H. Ritter, Whitman, Requardt and Assocs., Baltimore, to review several suggested changes and to recommend revisions to the standard. The committee produced a revised standard adopted by AWWA as C400–64T on Jan. 27, 1964. It was advanced to "standard" without revision on Jul. 2, 1965.

In early 1968, the committee was reactivated as the Standards Committee on Asbestos–Cement Pipe to review and revise all of the AWWA standards on asbestos–cement pipe. The committee produced a revised standard approved by the Board of Directors on Jan. 31, 1972, designated as "AWWA Standard for Asbestos–Cement Pressure Pipe for Water and Other Liquids, C400–72."

In the winter season of 1972–1973 the committee was reorganized and enlarged to include representation of national organizations having an interest in the scope of the committee and wishing to participate in the work. The reorganized committee reaffirmed C400–72 without revision so that it could be presented to the American National Standards Institute for designation as an American National Standard.

In 1975 the committee produced a revised standard approved by the AWWA Board of Directors Jan. 26, 1975, designated as AWWA C400–75, "Standard for Asbestos–Cement Pressure Pipe, 4 in. Through 24 in. for Water and Other Liquids." At the same time a new standard was produced by the committee and approved by the AWWA Board of Directors designated as AWWA C402–75, "Standard for Asbestos–Cement Transmission Pipe, 18 in. Through 42 in., for Water and Other Liquids."

The asbestos–cement pipe manufacturers had developed a new series of pipe classifications that was larger and designed to give greater freedom of selection to design engineers. This is of particular significance for large diameter pipeline projects where the savings in material cost can exceed the increased cost of more detailed design, better control of methods of installation, and provision of surge controls when justified.

The standard, AWWA C402–75, was developed to provide the user with a ready reference and specification for this type of pipe known as transmission pipe.

CTD014723

The possibility of confusion between the two standards, C400 and C402, was carefully reviewed by the committee. The result is this edition of C402, which maintains the sizes covered from 18 in. through 42 in. C400 has been revised simultaneously and covers sizes 4 in. through 16 in. There is now no overlap in sizes.

II—Information Regarding Use of This Standard

II.A *General.* When ordering pipe covered by this standard, local installation and operating conditions should be considered to determine the classification and type of pipe to specify. Also, certain other items must be specified to describe completely the pipe required.

It is recommended that, for large diameter pipeline projects, the purchaser evaluate local installation and operating conditions, operating pressures and surge pressures, trench loads, and surface loads when determining the strength classification to be used.

A proposed AWWA C403, "Standard Practice for the Selection of Asbestos-Cement Transmission Pipe," is under consideration at the present time by the committee.

NOTE: The purchaser is referred to AWWA C401 (formerly AWWA M23), "Standard Practice for Selection of Asbestos-Cement Distribution Pipe," for guidance in designing transmission pipe to fit his installation and operating conditions. Attention is directed to the fact that selection curves and related data in the current edition of AWWA C401 are applicable to pipe covered by AWWA C400-77, "Asbestos-Cement Distribution Pipe, 4 in. Through 16 in., for Water and Other Liquids," not to transmission pipe covered by this standard. The purchaser is advised to consult the manufacturer pending the issuance of the proposed AWWA C403.

The purchaser is referred to AWWA C603, "Installation of Asbestos-Cement Pressure Pipe," for guidance in the laying of the pipe.

II.B *Flexural load test.* Flexural load tests are not required (Sec. 2.2.1, 5.2.3). For large diameters, the wall thicknesses increase to a point at which the flexural strength is not a controlling factor, and therefore routine testing is not required.

II.C *Type of pipe.* The following criteria are presented for determining the type of pipe to be used under various soil and water conditions. Each condition should be considered separately even though each may exist in combination with others.

These criteria are based on exposures within the temperature range of 40–80F (5–28C). For pipe exposures to temperatures beyond these limits, consult the manufacturer.

The following criteria are referenced as:

1. Internal water (Table F.1).
2. External water (Table F.2).
3. Nonacid soluble sulfates—internal and external (Table F.3).
4. Acid soluble sulfates—internal and external.

II.C.1 *Internal water.* Aggressiveness of water transported through asbestos-cement pipes is related to the type-designation of asbestos-cement pipe suitable for such use in Table F.1. Aggressiveness of water is defined as follows:

CTD014724

(a) Highly aggressive:

$$pH + \log (AH) < 10.0$$

(b) Moderately aggressive:

$$pH + \log (AH) = 10.0\text{–}11.9$$

(c) Nonaggressive:

$$pH + \log (AH) \geq 12.0$$

where

pH = Index of acidity (or alkalinity) of the water—standard pH units
A = Total alkalinity—ppm as $CaCO_3$
H = Calcium hardness—ppm as $CaCO_3$

It should be recognized that water that has a pH + log (AH) less than or equal to 10 is an extremely aggressive water and would be very corrosive to almost all materials found in a typical water system, including the plumbing in consumers' homes. Such waters should be treated to increase pH or hardness to protect the entire network of materials that make up the system. In the event such water treatment is not to be undertaken, the manufacturer of each item used in the water system should be consulted for recommendations regarding the use of his product in an extremely corrosive environment.

NOTE: The expression pH + log (AH) is a modification of the Langelier Index. It has been prepared so that the aggressiveness of the water may be determined easily. A reasonable comparison of the two would be as follows:

	pH + log (AH)	Langelier Index
Highly aggressive water	<10.0	< −2.0
Moderately aggressive water	10.0 to 11.9	−2.0 to −0.1
Nonaggressive water	≥12.0	≥0

TABLE F.1

Asbestos-Cement Pipe Type Recommended for Internal Water Aggressiveness

Internal Water Aggressiveness	Recommended Pipe Type*
Highly aggressive	†
Moderately aggressive	II
Nonaggressive	I and II

* Type I—no limit on uncombined calcium hydroxide; Type II—1.0 per cent or less uncombined calcium hydroxide
† The serviceability of pipe for such applications should be established by the purchaser in conjunction with the manufacturer.

TABLE F.2

Aggressiveness of Nonsulfate Acidic Soils to Asbestos-Cement Pipe

Water Conditions Within the Soil Environment	Minimum pH of Acidic Soils When Using Asbestos-Cement Pipe	
	Type I	Type II
Essentially quiescent	5.0	4.0
Mildly fluctuating	5.5	5.0
Rapidly moving or grossly cyclic	6.3	5.5

II.C.2 *External water.* Aggressiveness of external water (water within the soil environment) in relation to asbestos–cement pipe as shown in Table F.2.

The guidelines for the use of asbestos–cement pipe in nonsulfate acidic soils are based upon minimum pH factors alone. Asbestos–cement pipe may or may not perform satisfactorily in acidic soil environments having pH values below those listed in Table F.2. To determine the suitability of asbestos–cement pipe in soils having lower pH values, each situation should be evaluated individually, taking into consideration all aspects of soil environment that affect asbestos–cement pipe corrosiveness.

CTD014725

Sulfate Aggressiveness Classification	Water: Water Soluble Sulfates—*ppm* SO_4	Soil: Water Soluble Neutral Sulfates—*ppm* SO_4
Nonaggressive	150 and less	1000 and less
Mildly aggressive	150–1500	1000–2000
Moderately aggressive	1500–10 000	2000–20 000
Highly aggressive	10 000 and greater	20 000 and greater

II.C.3 *Nonacid soluble sulfates—internal and external.* Aggressiveness of nonacid (pH $\geq$ 7.0) soluble sulfates in water and soils is related to the type-designation of asbestos-cement pipe suitable for such use in Table F.3. Sulfate aggressiveness in water and soil can be classified as indicated above.

II.C.4 *Acid soluble sulfates—internal and external.* Aggressiveness of acid (pH < 7.0) soluble sulfate waters and soils to asbestos-cement pipe must be evaluated independently. Acid sulfate soils and waters, whether the acid is inorganic or organic, must be evaluated independently of the criteria and guidelines set forth in paragraphs II.C.2 and II.C.3 and must take into consideration soil permeability and other factors. For guidance, consult the manufacturer.

II.D *Supplementary specifications.* The following information summarizes the conditions and items that the purchaser should consider when preparing his supplementary specifications and lists the sections in the standard where they may be found.

1. The standard used; that is, AWWA C402-77.
2. Affidavit of compliance, if required (Sec. 1.3)
3. Type of pipe to be furnished (Sec. 2.3 and Foreword II.C).
4. Classification of pipe (Sec. 3.1).
5. Nominal inside diameter (Sec. 3.2).
6. Lineal feet to be furnished in standard and random lengths (Sec. 3.3)
7. Number, size, type, classification, lengths, and extent of machining of special short lengths (Sec. 3.3.3).
8. Whether inspection by the purchaser (Sec. 5.1) and special marking (Sec. 6.1.4) are required.

III—Major Revisions

Major changes to the 1975 standard made in this revision are:

1. A more detailed description of aggressive soil and water criteria has been added in the Foreword, Sec. II.

TABLE F.3

Asbestos-Cement Pipe Type-Designation Chemical Resistance to Nonacid (pH = 7.0) Soluble Sulfates in Water and Soils

Type Designation	Chemical Resistance to Nonacid Soluble Sulfates in Water and Soils
I*	Will be attacked in various degrees by all but the nonaggressive levels of sulfate concentrations in waters and soils.
II	Resistant to all levels of soluble sulfates.

* The guideline criteria for sulfate resistance of Type I pipe were taken from the *Concrete Manual*, 8th edition, Bureau of Reclamation, 1971. Sulfate resistance here applies to all soluble sulfates regardless of the cation.

CTD014726

2. The lot definition of paragraph 1.2.3 has been revised to define more clearly the quantity of pipe manufactured by size versus time.
3. Paragraph 5.2.5 *Machines for Testing* defines the machines used in the various physical tests and also allows couplings to be hydrostatically tested with a rubber bladder inside the coupling at ten times the classification of the coupling.

CTD014727

American Water Works Association

AWWA C402-77

(Revision of C402-75)

AWWA Standard for

Asbestos-Cement Transmission Pipe, 18 in. Through 42 in., for Water and Other Liquids

Section 1—General

Sec. 1.1—Scope

This standard covers nine pressure classifications of Type I and Type II asbestos-cement pipe, 18–42 in. in diameter, for water and other liquids, to be laid underground in public and private rights-of-way.

1.1.1 *Use.* Asbestos-cement transmission pipe is to be used in pipe systems having relatively predictable flows and few appurtenances, which permit reasonable hydraulic analyses, including those for surge pressures.

Sec. 1.2—Definitions

Under this standard, the following definitions shall apply:

1.2.1 *Inspection.* Inspection of the pipe and the tests by the inspector.

1.2.2 *Inspector.* The authorized representative of the purchaser, entrusted with the duty of inspecting pipe produced and tests performed under this standard.

1.2.3 *Lot.* A lot as used herein for pipe 20 in. in diameter and smaller is defined as all pipe of any one classification, type, and size manufactured on any one machine in 24 hr but not to exceed 300 lengths. A lot as used herein for pipe larger than 20 in. in diameter is defined as all pipe of any one classification, type, and size manufactured on any one machine during a period of consecutive working days not exceeding seven days but not to exceed 300 lengths.

1.2.4 *Manufacturer.* The person, firm, or corporation that manufactures the pipe.

1.2.5 *Purchaser.* The person, firm, corporation, or government agency entering into a contract or agreement to

CTD014728

purchase pipe according to this standard.

Sec. 1.3—Affidavit of Compliance

The purchaser's supplemental specifications may require an affidavit of compliance from the manufacturer, whether factory inspection has been required or not, to the effect that the materials furnished under the purchaser's order comply with all applicable requirements of this standard.

Section 2—Materials

Sec. 2.1—Composition

Asbestos–cement pipe shall be composed of an intimate mixture of either: (1) portland cement or portland blast furnace slag cement and asbestos fiber with or without silica; or (2) portland pozzolana cement and asbestos fiber. Both (1) and (2) can be with or without the addition of curing agents. The pipe shall be formed under pressure and cured. The finished pipe shall be free from organic materials.

Sec. 2.2—Physical Requirements

2.2.1 *Flexural strength.* Because only improperly bedded and improperly installed small diameter pipe is susceptible to adverse flexural loading, there is no flexural requirement for large diameter pipes.

2.2.2 *Bursting strength.* Each length of pipe and each coupling sleeve shall have sufficient strength to withstand the design internal pressure indicated for its classification in Table 1 when subjected to the hydrostatic test procedure specified in this standard.

TABLE 1
Pipe Classification

Classification	Design Internal Pressure *psi*
30	300
35	350
40	400
45	450
50	500
60	600
70	700
80	800
90	900

CTD014729

TABLE 2
*Design External Load**—lb/lineal ft

Pipe Size in.	Classification								
	30	35	40	45	50	60	70	80	90
18	2 500	3 000	4 000	5 000	6 500	8 500	11 000	14 000	18 000
20	2 500	3 500	4 500	5 500	7 100	9 500	12 000	15 000	20 000
21	2 500	3 500	4 500	5 800	7 300	9 700	12 500	16 000	21 000
24	2 800	3 800	5 000	6 200	8 100	11 000	15 000	19 000	24 000
27	3 500	4 200	5 500	7 000	8 800	12 500	16 500	20 500	27 000
30	3 500	4 500	6 000	7 500	9 700	13 500	18 000	22 500	30 000
33	3 500	5 000	6 500	8 000	10 500	14 500	19 500	24 500	33 000
36	4 000	5 000	7 000	9 000	11 200	16 000	21 000	26 000	36 000
39	4 200	5 300	7 500	9 700	12 000	17 200	22 500	28 000	39 000
42	4 300	5 700	8 000	10 500	13 000	18 500	24 000	30 000	42 000

* It is necessary to apply a load factor to the above three-edge bearing loads in order to correlate them to the field loads. (See AWWA Standard C403.)

2.2.3 *Crushing strength.* Each length of pipe shall have sufficient strength to support the design external load indicated for its classification in Table 2 when subjected to the crushing-test procedure specified in this standard.

Sec. 2.3—Chemical Requirements

Pipe shall be designated as either Type I or Type II according to its content of uncombined calcium hydroxide as determined by the test procedures in this standard for uncombined calcium hydroxide. The requirements for each type are

Type I—no limit on uncombined calcium hydroxide

Type II—1.0 per cent or less uncombined calcium hydroxide.

Section 3—Design

Sec. 3.1—Pipe Classifications

Pipe supplied under this standard shall be made in one or more of the classifications shown in Table 1. (The numerical value for each classification is equivalent to one tenth of the hydrostatic lot test pressure.)

Sec. 3.2—Pipe Diameters

Pipe shall be made with nominal inside diameters of 18, 20, 21, 24, 27, 30, 33, 36, 39, and 42 in. The average inside diameter of a standard or random pipe length shall not be less than the nominal diameter by more than 1.5 per cent.

CTD014730

Sec. 3.3—Pipe Lengths

Pipe shall be produced in standard, random, and short lengths. At least 90 per cent of the total footage of pipe of any classification, type, and size, excluding short lengths, shall be furnished in standard lengths. The remaining 10 per cent may be in random lengths.

3.3.1 *Standard length* shall be 13 ft ± 1 in.

3.3.2 *Random lengths* shall be cut from standard lengths and shall be not less than 7 ft long.

3.3.3 *Short lengths* for making connections to valves, fittings, or structures, and for making closures shall be furnished as specified by the purchaser.

Sec. 3.4—Couplings

A coupling shall consist of an asbestos–cement sleeve of the same type and classification as the pipe and two rubber rings or a device that has equal or better bonding characteristics, strength, and serviceability as that of an asbestos–cement coupling. The manufacturer shall submit to the purchaser for approval, prior to manufacturing, specifications and drawings of alternate couplings.

TABLE 3
Wall Thickness Tolerances

Size of Pipe in.	Wall Thickness Tolerance in.
18	−0.12
20–24	−0.14
27–30	−0.17
33–36	−0.20
39–42	−0.23

3.4.1 *One coupling* of the same size and classification as the pipe shall be furnished with each standard and random length of pipe.

3.4.2 *Rubber rings* shall conform to the requirements of the latest edition of ASTM D1869, "Rubber Rings for Asbestos–Cement Pipe."

Sec. 3.5—Joints

Joints shall be capable of withstanding, without leakage, a hydrostatic pressure test as defined in Section 5.2.2.1.

Sec. 3.6—Wall Thickness

The wall thickness of the machined portion of any length of pipe shall not be less than the manufacturer's standard by the listed tolerance in Table 3.

Section 4—Workmanship and Finish

Sec. 4.1—Imperfections

4.1.1 *Interior surfaces.* The inside surface of each length of pipe shall be free from bulges, dents, and tears that result in a variation in diameter of more than 0.20 in. from the diameter of adjacent unaffected portions of the surface.

4.1.2 *Coupling areas.* The coupling areas of the barrel of each length of pipe shall be free from dents and gouges that could cause leakage from the joint.

4.1.3 *Exterior surfaces.* Flaking on the exterior surface and edge of machined ends shall not extend back by

CTD014731

more than 0.500 in. from the end, have a depth of more than 0.125 in., and shall not extend around the perimeter for more than 0.500 in. at any one location.

4.1.4 *Straightness.* Each length of pipe shall not vary in straightness by more than 0.05 in./ft of length when the variation is measured as follows:

Measure the maximum ordinate from the exterior surface of the pipe by placing a straightedge that exceeds the pipe length against the exterior surface and measure the maximum distance from the exterior pipe surface to the straightedge.

Section 5—Inspection, Testing, and Rejection

Sec. 5.1—Inspection

5.1.1 *General.* Inspection by the purchaser shall not relieve the manufacturer of the responsibility to furnish material conforming in all respects to the requirements of this standard.

5.1.2 *Notification.* If inspection is specified under Sec. 5.1.4 by the purchaser, the manufacturer shall notify the purchaser, in advance, of the date, time, and place of testing of the pipe, so that the purchaser may be represented at the test.

5.1.3 *Access.* The inspector shall have free access to those parts of the manufacturer's plant that are involved in work performed under this standard. The manufacturer shall afford the inspector, without charge, all reasonable facilities for determining whether the pipe meets the requirements of this standard.

5.1.4 *Testing.* If inspection is specified by the purchaser, the purchaser at his option may witness any or all test phases. The pipe to be tested will have passed the routine inspection and testing of this specification. The number of tests to be conducted for hydrostatic bursting strength (lot test) and, when required, crushing strength shall be limited to one per each 300 standard lengths of each size, type, and classification of pipe on the order. If uncombined calcium hydroxide tests are required, the number of tests will be one for each size, type, and classification of pipe on the order. The purchaser or his authorized inspector may select the pipe to be tested. Retesting and rejection as shown in Sec. 5.3 shall apply.

Sec. 5.2—Physical Test Requirements

5.2.1 *Test specimens.* All pipes and couplings tested under this standard shall be in a normal, air-dried condition when tested.

CTD014732

TABLE 4
Hydrostatic Tests

Classification	Proof Test psi	Lot Test psi
30	225	300
35	263	350
40	300	400
45	338	450
50	375	500
60	450	600
70	525	700
80	600	800
90	675	900

5.2.2 *Hydrostatic tests:*

5.2.2.1 Each standard, random, or short length of pipe and each coupling sleeve shall be tested under an internal hydrostatic pressure as shown for the routine proof test in Table 4. All air shall be expelled and the water pressure shall be increased to the test pressure at a uniform rate of not less than 100 psi/s. The test pressure shall be maintained for at least 5 s. Any pipe length or coupling sleeve that shows leakage, sweating, or other defects shall be rejected.

5.2.2.2 From each lot that has passed the hydrostatic proof test, a 1-ft, or longer length of pipe shall be cut from the unmachined portion of a pipe. The unmachined sample shall withstand the hydrostatic lot test shown in Table 4 when tested in the manner specified in paragraph 5.2.2.1 except that the test pressure need not be held for 5 s. If inspection by the purchaser has been specified, the length of pipe to be tested may be selected by the inspector. Each length of pipe so tested shall be retested in the manner and at the pressure specified in paragraph 5.2.2.1.

5.2.3 *Flexural testing.* No flexural testing is required.

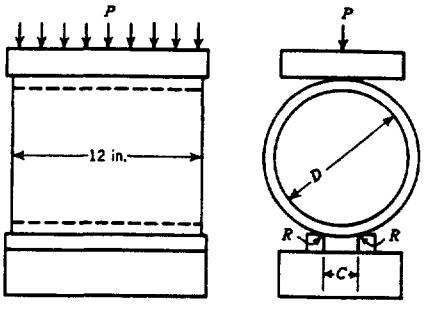

Fig. 1. Crushing Test Assembly

The diagram at the left shows a side view of the test assembly; that at the right, an end view. P *represents load;* R, *approximately 0.5 in.—the radius of the bearings;* D, *the nominal diameter of the pipe; and* C, *the clear space between supports.* C *should be approximately 1 in./ft of internal pipe diameter, but in no case less than 1 in.*

5.2.4 *Crushing tests.* On lots containing more than 100 lengths of each size and classification, one length from each 300 lengths or fraction thereof shall be tested for crushing strength. If inspection by the purchaser has been specified, the length of pipe to be tested may be selected by the inspector. From each selected length, one unmachined length of pipe 1 ft long shall be cut. This section shall be tested by the crushing-test method shown in Fig. 1. After 75 per cent of the specified load has been reached, the loading shall be applied at a uniform rate of approximately 2 000 lb/min. The test section shall not fail until the total load applied meets or exceeds the applicable value shown in Table 2.

5.2.4.1 For this test, the two lower bearings shall consist of two straight strips with vertical sides, each strip having its interior top edge rounded to a radius of approximately 0.5 in. The

CTD014733

strips shall be of hardwood or metal; if metal, a piece of leather belting 3/16 in. in thickness shall be laid over them. The strips shall be securely fastened to a rigid block, with the interior vertical faces parallel and a distance apart of approximately 1 in./ft of internal pipe diameter, but in no case less than 1 in. The upper bearing shall be a rigid wooden block, straight and true from end to end. The upper and lower bearings shall extend the full length of the test section.

5.2.4.2 For those sizes and classifications where the specified crushing load exceeds 30 000 lb/linear ft, the test length may be less than 1 ft long. In those cases, the test load shall be such as to produce an equivalent specified loading per linear foot.

5.2.5 *Machines for testing.*

5.2.5.1 The machines used for the hydrostatic proof test shall have gaskets that seal the ends of the pipe, couplings, or pipe and coupling with factory-assembled joint, but exert no end pressure. Couplings also may be hydrostatically proof tested with a rubber bladder inside of the coupling and, if so tested, each coupling shall have sufficient strength to withstand a test pressure of ten times the classification of the coupling. The machine used for hydrostatic burst testing or lot test shall have gaskets that seal against the inside of the pipe at or near the ends of the test specimen without materially counteracting the hydrostatic test pressure.

5.2.5.2 The machine used for the crushing test shall be substantial and rigid throughout so that the distribution of the load will not be appreciably affected by the deformation or yielding of any part of the machine.

Sec. 5.3—Retests (Physical) and Rejection

5.3.1 *Crushing strength.* The failure of any specimen tested for crushing strength to support 75 per cent of the crushing load required in Table 2 shall be cause for rejection of the entire lot of that size and classification manufactured during the same shift as the test specimen. If any specimen tested for crushing strength supports more than 75 per cent but less than 100 per cent of the crushing load, two additional pipe sections of the same size and classification, manufactured during the same shift, shall be subjected to the crushing test. The additional lengths may be selected by the inspector, if inspection by the purchaser has been specified. The failure of one of these additional specimens to meet the full crushing strength requirement shall be cause for rejection of the entire lot of that size and classification manufactured during the same shift as the test specimen.

5.3.2 *Hydrostatic tests.* If any pipe subjected to the hydrostatic tests specified in Sec. 5.2.2.2 fails to withstand the pressure specified in Table 4, two additional lengths of the same size and classification, manufactured during the same shift, shall be subjected to the same hydrostatic test. The additional lengths may be selected by the inspector, if inspection by the purchaser has been specified. The failure of one of these additional lengths to withstand the specified pressure shall be cause for rejection of the entire lot of that size and classification manufactured during the same shift as the test lengths.

Sec. 5.4—Test for Uncombined Calcium Hydroxide

The manufacturer shall perform this test as often as necessary to ensure

CTD014734

compliance with the requirements for uncombined calcium hydroxide in Type II pipe.

5.4.1 *Reagents.*

Phenolphthalein indicator. Dissolve 1.0 g of phenolphthalein in 100.0 ml of absolute ethanol.*

Glycerol-ethanol solvent. Prepare a solution consisting of glycerol and anhydrous or absolute ethanol,* 1:2 by volume. To each litre of this solution, add 2.0 ml phenolphthalein indicator. Adjust the solvent to slightly basic with either dilute NaOH in absolute ethanol* or standard ammonium acetate, depending upon the original pH.

Strontium nitrate [$Sr(NO_3)_2$].

Standard ammonium acetate solution. Dissolve 16.0 g dry crystalline ammonium acetate in 1 l of absolute, or anhydrous, ethanol.*

Standardize the ammonium acetate solution by titrating against pure CaO that has been freshly prepared by calcining pure calcium carbonate or calcium oxalate to constant weight in a platinum crucible at 1650–1830F (900–1 000C).

When the calcined CaO has cooled in a desiccator, perform the following operations in rapid succession. Grind it in an agate mortar. Then weigh out 0.05–0.06 g CaO into a clean, dry 250-ml Erlenmeyer flask and add 60 ml of the glycerol–ethanol solvent and 2.0 g of anhydrous strontium nitrate to the flask. Place a TFE encapsulated magnetic stirring bar into the flask and attach a reflux condenser. Adjust the heating rate and stirring speed to obtain a vigorous boiling and complete agitation. Titrate the hot solution with standardized ammonium acetate solution every 5 min. The endpoint is reached when no further color appears in the solution after 10 min of boiling. Titration is to be carried out only on a hot solution. Good titration procedure is evidenced by a change to pink color upon cooling.

5.4.2 *Procedure.*

Step 1. Brush representative pieces of the pipe free of dust and drill with a clean, sharp 0.25-in. carbide-tipped drill inward from the outer surface at a rate of penetration of approximately 1 ipm until the drill point emerges from the inside wall. Catch the drillings on a clean sheet of glazed paper. Use a soft brush to collect all drillings. Screen through a 20-mesh screen immediately, and place in a weighing bottle.

Step 2. Place the bottle with top removed into a drying oven at 217F (105C) for 2 hr and then cool to room temperature in a desiccator.

Step 3. Weigh out 1 ± 0.010 g of the dried sample to the nearest 0.001 g and place in a clean, dry 250-ml Erlenmeyer flask, to which a TFE-encapsulated stirring bar, 60 ml of the glycerol-ethanol solvent, and 2.0 g $Sr(NO_3)_2$ have been added. Attach the flask to a water-cooled condenser (with a standard 24/40 glass joint) and place on a hot plate with a magnetic stirrer. Boil the solution gently for 30 min, stirring slowly. Then, remove the flask and filter the mixture, under vacuum, through a Buchner funnel. Bring the filtrate to a boil and titrate to a colorless endpoint with the standardized ammonium acetate reagent. Determine the endpoint by comparing with a similar mixture containing no phenolphthalein indicator.

* Specially denatured alcohol No. 30, 3a, or 2b, of the US Bureau of Internal Revenue, or alcohol consisting of 95 per cent specially denatured alcohol No. 3a plus 5 per cent isopropanol, may be substituted.

CTD014735

5.4.3 *Calculations:*

$$E = \frac{WCaO \times 1.32}{Va}$$

where

E = the weight in grams of $Ca(OH)_2$ per millilitre of standardized ammonium acetate solution

$WCaO$ = the weight in grams of CaO in the standardized ammonium acetate solution

Va = the volume in millilitres of standardized ammonium acetate used in titration of the solution.

$$\text{Percentage uncombined } Ca(OH_2) = \frac{EV}{W} \times 100$$

where

V = the volume of standardized ammonium acetate solution required by the sample, in millilitres

W = the weight of the sample in grams.

Sec. 5.5—Test Records

The results of all tests shall be recorded and retained for one year, and shall be available to the purchaser at the place of manufacture.

Section 6—Marking and Delivery

Sec. 6.1—Marking

6.1.1 *Standard and random lengths.* Each standard or random length of pipe shall be clearly marked on the outside surface with the trade name, nominal inside diameter, classification, type, date, and shift of manufacture, and the word "Transmission."

6.1.2 *Short lengths.* Each short length of pipe shall be clearly marked on the outside surface with the nominal inside diameter, the classification, the letter T to indicate that it has been hydrostatically tested, and the word "Transmission."

6.1.3 *Couplings.* All component parts of each coupling shall be clearly marked for use with the pipe for which they are intended. Each coupling shall also be marked with the letter T to indicate that it has been hydrostatically tested.

6.1.4 *Special markings.* If factory inspection is made by the purchaser or his authorized inspector, each pipe and each coupling shall receive an additional special marking of no more than three letters, as specified by the purchaser.

Sec. 6.2—Preparation for Shipment

All pipe and couplings, unless otherwise specified, shall be prepared for standard commercial shipment.

IP—15M—7-77—43402

CTD014737