MEHAFFY & WEBER
A PROFESSIONAL CORPORATION
ATTORNEYS AT LAW
ONE ALLEN CENTER
500 DALLAS, SUITE 1200
HOUSTON, TEXAS 77002

TELEPHONE (713) 655-1200
FAX (713) 655-0222

2615 CALDERA AVENUE
POST OFFICE BOX 16
BEAUMONT, TEXAS 77704
TELEPHONE (409) 835-5011
FAX (409) 835-5177
(409) 835-5729

1006 GREEN AVENUE
POST OFFICE BOX 189
ORANGE, TEXAS 77630
TELEPHONE (409) 886-7766
FAX (409) 886-7790

PLAINTIFF'S EXHIBIT

CAP-210

August 24, 2001

Re: Cause No. 10346*BH99; *Donald R. Kinsey, et al vs. Owens Corning, et al*; In the 23rd Judicial District Court of Brazoria County, Texas (M/W No. 0829-0338; Dow No. 0002086)

Mr. Allen R. Vaught
Baron & Budd, P.C.
3102 Oak Lawn Ave., Ste. 1100
Dallas, TX 75219-4281

Via Facsimile: 214/520-1181

Dear Allen:

As I indicated to you by phone I would like to take the deposition of your economist Dr. Thompson in this case. In addition I wanted to take the depositions of any liability experts that will offer any testimony concerning The Dow Chemical Company. I know you have a very long list of potential experts in the case and I know that most of them will not testify but to the extent that there are those who will testify I would appreciate if you would let me know that as soon as possible as to which experts will be testifying and provide me with some dates when they can be made available for deposition.

Thank you for your consideration.

Very truly yours,

Arthur R. Almquist,
For the Firm

ARA/fmh

MW/116381

It is, therefore, desirable to minimize the air stream contraction which occurs at the vena contracta zone by suitable hood design. Figure 4-5 illustrates the effect of hood design on the entry coefficient and on the entry loss in terms of velocity head in the connecting duct, the latter being another way of expressing hood entry loss.

Considering the grinding wheel hood shown in Figure 4-8, some typical calculations are as follows:

Example Problem I

GIVEN

C_e = 0.78

SP_h = 2.50 inches water

Duct Diameter = 5 inches

Duct Area = 0.136 square feet

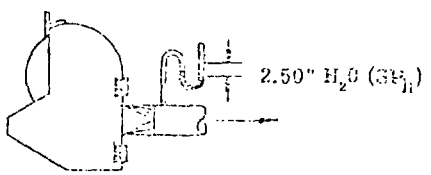

where SP_h = static pressure, inches water

VP = velocity pressure, inches water

h_e = hood entry loss, inches water

F_h = hood entry loss factor

TO FIND

a. Air Volume

b. Duct Velocity

c. Per Cent Loss in Velocity Head

a. $Q = 4005\ C_e\ A\ \sqrt{SP_h} = 4005 \times 0.78 \times 0.136\ \sqrt{2.50} = 672$ cfm

b. $V = \frac{Q}{A} = \frac{672}{0.136} = 4950$ fpm

c. $VP = \left(\frac{V}{4005}\right)^2 = \left(\frac{4950}{4005}\right)^2 = 1.52$

$SP_h = VP + h_e$

$h_e = SP_h - VP = 2.50 - 1.52 = 0.98$

$F_h = \frac{0.98}{1.52} = 0.645$

% Loss = F x 100 = 0.645 x 100 = 64.5%

As a ventilation standard, static pressure alone without reference to the duct diameter is meaningless. Increasing the branch duct size results in higher velocity, greater resistance and a lowered rate of flow although the static pressure value is increased. The ventilation performance of hoods should be based primarily on air volumes handled.

Uniformity Air Distribution

Slot hoods are most commonly used to provide uniform inward air flow at adequate capture velocity over a long length of contaminant generation—such as an open tank—or over the face of a large hood such as a side draft. The function of the slot is solely to obtain proper air distribution. Slot velocity does not contribute toward capture velocity; a high slot velocity simply generates high pressure losses. Note that the capture velocity equation (Figure 4-4) shows that the capture velocity is related to the exhaust volume and the distance, not the slot velocity.

Slot hoods usually consist of a narrow inward opening and a plenum chamber. Uniform exhaust air distribution across the slot is obtained by varied design. Splitter vanes may be used in the plenum; however, in most industrial exhaust systems vanes are subject to corrosion and/or erosion and provide locations for material build-up. Adjustable slots can be provided but these are subject to tampering and maladjustment. The most practicable hood is the fixed slot and unobstructed plenum type. The design of the slot and plenum is such that the pressure loss through the slot is high compared with the pressure loss through the plenum. All portions of the slot are subjected to essentially equal suction and the slot velocity will be essentially uniform.

There is no suitable formula method for calculating the pressure drop from one end to the other of a slot-plenum combination. A very useful approximation, applicable to most hoods, is to design for a maximum plenum velocity equal to 1/2 of the slot velocity. For most slot hoods a 2,000 fpm slot velocity and 1,000 fpm plenum velocity is a reasonable choice for uniformity of flow and moderate pressure drop. Following are general design guidelines:

Constant Velocity. Reducing the plenum area in the direction of air flow to maintain constant velocity results in the smallest practical plenum size since the air approaches each slot at the same velocity. Where large, deep plenums are possible, as with enclosed hoods, the slot velocity may be as high as 3,000 fpm with a 500 fpm plenum velocity.

Tapered Plenum. Tapered plenums require larger plenum sizes because all of the air must pass in one direction.

CAPCO KIN 0000482

Note that where slot-plenum hoods are used for dust control, plenum velocities must be 3,000 fpm or higher to transport particulate matter through the hood. Otherwise, settling and plugging will occur.

Calculation of Static Pressure Losses in Exhaust Hoods

Simple Hoods: Plain duct openings, flanged duct openings, canopies and similar hoods have only one significant energy loss, at the point where the air enters the duct. At this location a pronounced vena contracta is formed and an energy loss occurs first in the conversion of static pressure to velocity pressure. As the air passes through the vena contracta, the flow area enlarges to fill the duct and velocity pressure converts to static pressure, again with some energy loss. The more pronounced the vena contracta, the greater will be the energy loss and hood static pressure. The hood entry loss (h_e) can be expressed therefore in terms of a single factor (F) which, when multiplied by the duct velocity pressure (VP), will give the entry loss (h_e) in inches of water.

Example Problem II

In a simple hood (Figure 4-6) the hood static pressure is equal to the velocity pressure in the duct plus the hood entry loss. (See page 1-3, "Acceleration of Air and Hood Entrance Losses".) The velocity pressure represents the pressure necessary to accelerate the air from rest to the duct velocity; the hood entry loss represents the energy necessary to overcome the loss as the air enters the duct. This may be expressed as:

$$SP_h = h_{ed} + VP_d$$

when face velocity is less than 1000 fpm (when face velocity is higher than 1000 fpm, the hood should be treated as a compound hood. See following.).

Where: h_{ed} = entry loss of transition (See Figure 6-10)

VP_d = Duct Velocity Pressure

A typical calculation is as follows:

$$\text{Given: Face Velocity} = \frac{Q}{A_{face}} = 250 \text{ fpm}$$

$$\text{Duct Velocity} = \frac{Q}{A_{duct}} = 2000 \text{ fpm}$$

$$VP_d = 0.25"$$

$$F = 0.75\ VP_d$$

$$SP_h = h_{ed} + VP_d$$

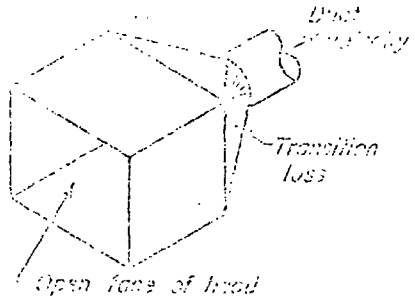

Fig. 4-6

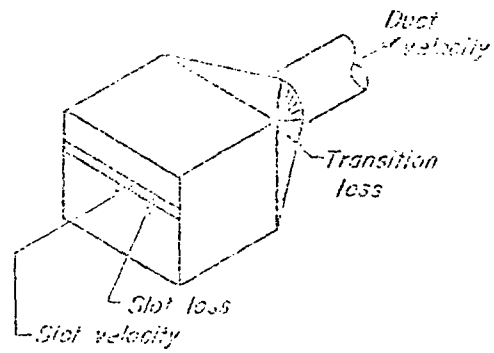

Fig. 4-7

Compound Hoods: Other types of hoods have two or more points of significant energy loss and must be [illegible] the duct. Common examples are hoods having double entry losses: slot type hoods and [illegible] hoods commonly used on plating, metal dipping and degreasing tanks and [illegible] exhaust ventilation.

CAPCO KIN 0000483

Figure 4-7 illustrates a double entry loss hood; this is a single slot hood with a plenum and a transition from the plenum to the duct. The purpose of the plenum is to give uniform velocity across the slot opening. Air enters the slot, in this case a sharp-edged orifice, and loses energy due to the vena contracta at this point. The air then continues through the plenum where the greater portion of the slot velocity is retained because the air stream projects itself across the plenum in a manner similar to the "blowing" supply stream shown in Figure 1-6. (The retention of velocity in the plenum is characteristic of most local exhaust hoods because of the short plenum length. In the case of very large hoods or exhausted sealed rooms, however, the velocity loss must be taken into account.) The air then converges into the duct through the transition where the second significant energy loss occurs.

Example Problem III

In Figure 4-7 the air enters the slot, a slot entry loss occurs and the air is accelerated to the slot velocity. It then crosses the plenum and enters the duct through the hood transition where another entry loss occurs and the air is accelerated further from its initial velocity in the slot to the higher duct velocity. In most cases, the slot velocity is equal to or lower than the duct velocity; in all cases, however, the air must be accelerated to the higher velocity.

The hood static pressure for a double entry hood can be expressed as the equation:

$$SP_h = h_{es} + VP_s + h_{ed} + VP_d - VP_s$$

thus: (1) $SP_h = h_{es} + h_{ed} + VP_d$ when duct velocity is greater than slot velocity

(2) $SP_h = h_{es} + h_{ed} + VP_s$ when slot velocity is greater than duct velocity

where: h_{es} = entry loss through slot (See Figure 6-10)

VP_s = slot velocity pressure

h_{ed} = entry loss of transition (See Figure 6-10)

VP_d = duct velocity pressure

Some typical calculations, using "Equation 1", are as follows:

Plating Hood	Foundry Shakeout Hood
Slot velocity = $\frac{Q}{A_{slot}}$ = 2000 fpm	Slot velocity = 1600 fpm
VP_s = 0.25"	VP_s = 0.07"
h_{es} slot = 1.78 VP_s	h_{es} slot = 1.78 VP_s
Duct velocity = $\frac{Q}{A_{duct}}$ = 3900 fpm	Duct velocity = 3,700 fpm
VP_d = 0.95"	VP_d = 0.76"
h_{ed} transition = 0.25 VP_d	h_{ed} transition = 0.25 VP_d

$$SP_h = h_{es} + h_{ed} + VP_d$$

Substituting these values:

$$SP_h = 1.78\ VP_s + 0.25\ VP_d + VP_d$$

$SP_h = (1.78 \times 0.25) + (0.25 \times 0.95) + 0.95$ $SP_h = (1.78 \times 0.07) + (0.25 \times 0.76) + 0.76$

$SP_h = 0.45 + 0.24 + 0.95" = 1.64"$ $SP_h = 0.12 + 0.19 + 0.76" = 1.07"$

CAPCO KIN 0000484

The use of "Equation 2" is illustrated in the case of a hood where:

Slot velocity = 4000 fpm
Duct velocity = 2000 fpm
VP_s = 1.00"
VP_d = 0.25"

$$SP_h = h_{es} + h_{ed} + VP_s^*$$
$$= (1.78 \times 1.00") + (0.25 \times 0.25") + 1.00"$$
$$SP_h = 2.8625" = 2.84"$$

* In an actual installation there may be some regain of the higher VP as the air passes through the hood. It is not possible to predict this, however, and it is better to assume that the energy requirement is as shown.

Certain hoods may be constructed with internal baffles and/or slots and can have more than two significant energy losses. In such cases, a simple step-by-step calculation of all losses will result in an accurate determination of SP_h.

Ventilation of Radioactive and High Toxicity Operations

Ventilation of radioactive and high toxicity processes requires a knowledge of the hazards, the use of proven control methods and adequate maintenance, including monitoring. While the degree of air or gas cleanliness required will vary with the operation, in most cases the order of cleaning before discharge to atmosphere will be considerably beyond the more usual industrial clean air standards.

The chemical laboratory exhaust hood (VS-203) illustrates typical design criterion. The influence of eddy currents from air supply systems, the care in sizing and locating exhaust connections, the study of air flow patterns within the hood and the cleaning of exhaust gases are much more involved than the rule of thumb design efforts for usual laboratory hoods where dilution ventilation greatly contributes to satisfactory control. The same care is mandatory for air supply and exhaust systems and the selection of air cleaning equipment. Air cleaning of supply air is normally of a high order of efficiency and the exhaust air cleaning is often a combination of high-efficiency collectors or filters backed up by absolute or ultra high-efficiency designs.

Exposure of service personnel and contamination hazards from servicing or replacing collector or filter elements justify the expensive equipment so often encountered. Wet dust collector designs in place of inexpensive dry filters may store material more safely and may make contamination of an area less likely. Reverse jet fabric collectors will often be used in place of less expensive conventional fabric because there are fewer fabric surfaces to leak and fewer elements to be replaced. Bagging or prefilters installed in series with absolute filters will reduce replacement cycle, reduce handling, waste disposal and possible contamination problems.

The following general rules should be followed in the design of hoods for radioactive and high toxicity materials:

1. Operations in which radioactive materials are handled should be enclosed as much as possible to prevent contaminating large air volumes. (The use of glove boxes minimizes air volumes and simplifies air treatment problems.)
2. Low velocities and cross-drafts should be avoided because they may increase contamination and dust handling may fail.
3. The volume of air withdrawn from the hood must be greater than the volume of contaminated gases, fumes or dusts created in the hood.
4. If possible, the operations requiring large amounts of wet digestion and volatilized acid or solvent treatment should be confined to one group of hoods and the handling of dry material in others.
5. Where ever possible, radioactive aerosols should be removed by filtration as close to the hood as practical to prevent unnecessary contamination of equipment and ductwork.
6. The value or recoverability of the material may require a design so that even the smallest chips and turnings can be reclaimed.
7. An adequate supply of coolant inside the hood may be necessary, depending on the pyroforic nature of the material.
8. Accessibility for decontamination of the hood and duct system must be made as easy as possible and corrosion resistant stainless steel is used for the metal parts of the hood for this reason.
9. The hood is to be located in ductwork within the building that is under a negative pressure.

Generally, for conventional type hoods, an average face velocity of 125-200 fpm and a minimum face velocity of 100 fpm should be necessary to insure that no contaminant would escape into the room. In addition, face

CAPCO KIN 0000485

velocities of laboratory hoods with adjustable fronts should be controlled within reasonable limits in order to reduce the disturbances of air-borne materials within the hood. This velocity control can be accomplished by either proportional bypass (constant volume) or controlled face velocity (variable volume). Hoods with high heat loads should have a major portion of the air exhausted through the slot at the top.

In the laboratory handling of high alpha or beta emitters, enclosed glove boxes should be used. With the necessary tight construction, an exhaust volume of from 25 to 50 cfm is usually sufficient for these enclosures. The air locks needed with these hoods should be exhausted if they open directly to the room.

Adequate quantities of makeup air must be furnished by mechanical supply systems and intelligently distributed with relation to exhaust points. Supply air distribution must be arranged to provide general air flow from clean areas toward more contaminated areas. Filtration of supply air is necessary to reduce air-borne dust concentrations, thus prolonging the life of ultrahigh efficiency exhaust filters.

The use of prefilters in laboratory type hoods for radioactive materials prevents contamination of the exhaust piping. A gauge should be installed indicating pressure drop across the filter, so that the filter will be replaced when pressure drop exceeds design value. Filtration of room supply air will prolong the life of ultra high efficiency hood exhaust filters.

Where there is a possibility of spontaneous or continuous release of toxic materials, or where several hoods are connected to a single exhaust system the exhaust fan should be operated continuously. Standby fan capacity should be available for breakdowns.

CAPCO KIN 0000486

HOOD TYPE	DESCRIPTION	COEFFICIENT OF ENTRY, C_e	ENTRY LOSS
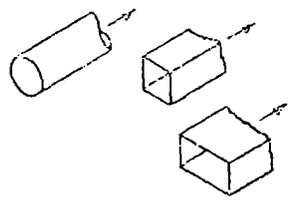	PLAIN OPENING	0.72	0.95 VP
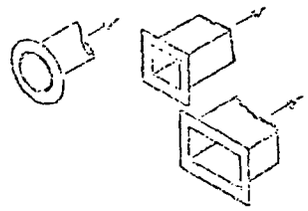	FLANGED OPENING	0.82	0.49 VP
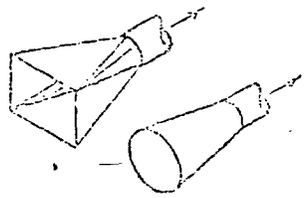	TAPER or CONE HOOD	Varies with angle of taper or cone. See Fig. 6-10	
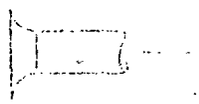	BELL MOUTH INLET	0.93	0.04 VP
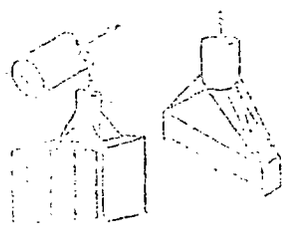	ORIFICE	See Fig. 6-10	
	TYPICAL GRINDING HOOD	STRAIGHT TAKE-OFF: 0.78	STRAIGHT TAKE-OFF: 0.35 VP
		TAPERED TAKE-OFF: 0.85	TAPERED TAKE-OFF: 0.20 VP

Fig. 4-8

CAPCO KIN 0000487

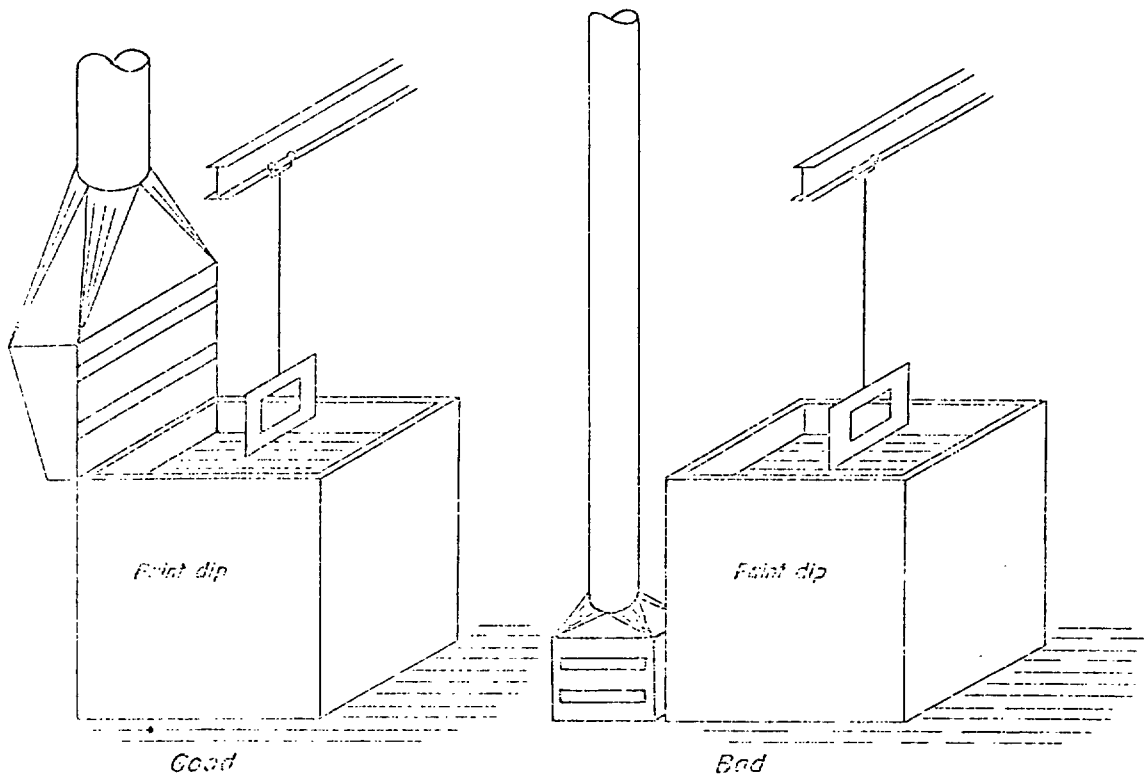

LOCATION

Solvent vapors in health hazard concentrations are not appreciably heavier than air. Fast cast from the floor usually gives fire protection only.

Example:	Density of air	1.0
	Density of 100% vinyl acetate vapor	4.49
	Density lowest explosive mixture	1.0[illegible]
	Density T.L.V. mixture	1.0003

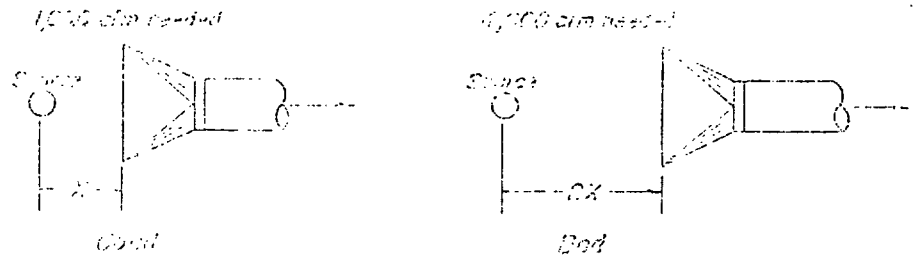

LOCATION

[illegible] hood as close to the source of [illegible] possible. The required [illegible] the square of the [illegible] from the source.

AMERICAN CONFERENCE OF GOVERNMENTAL INDUSTRIAL HYGIENISTS

PRINCIPLES OF EXHAUST HOODS

DATE 1-64 | Fig. 4-9

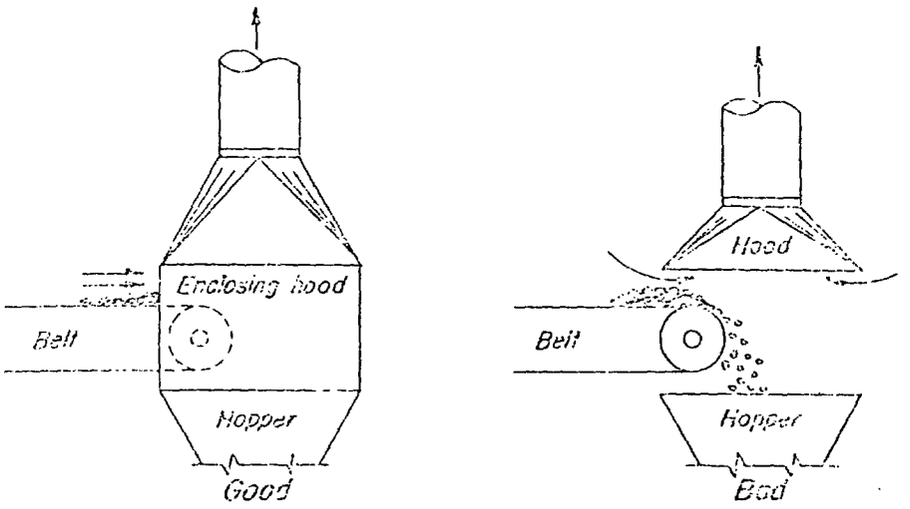

ENCLOSE

Enclose the operation as much as possible. The more completely enclosed the source, the less air required for control.

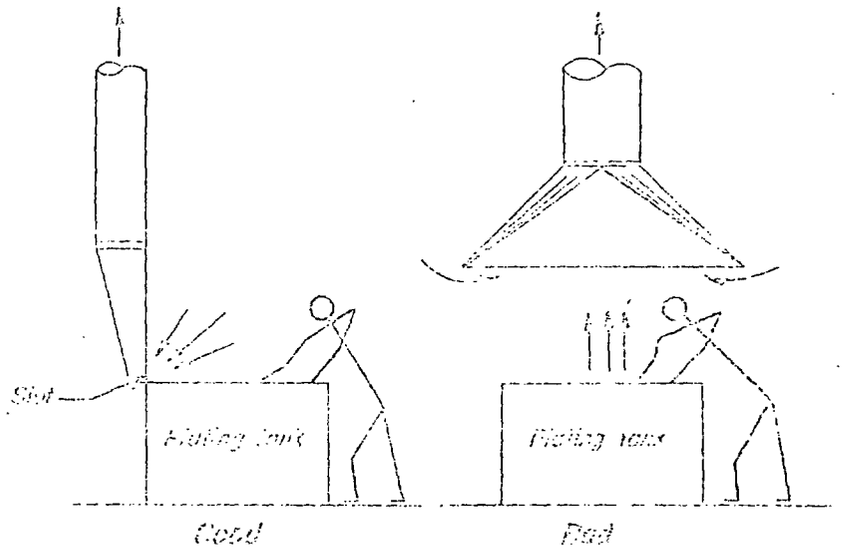

DIRECTION OF AIR FLOW

Locate the hood so the contaminant is removed away from the breathing zone of the worker.

AMERICAN CONFERENCE OF GOVERNMENTAL INDUSTRIAL HYGIENISTS		
PRINCIPLES OF EXHAUST HOODS		
DATE 1-64		Fig. 4-10

CAPCO KIN 0000489

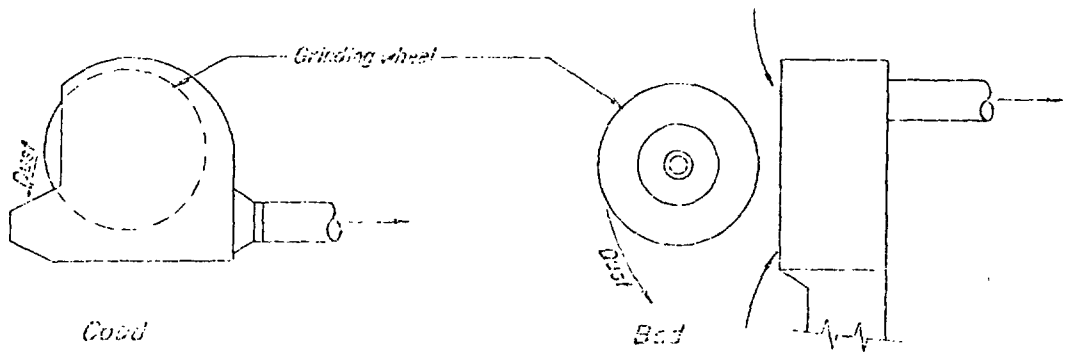

Locate and shape the hood so the original velocity of the contaminant will throw it into the hood opening.

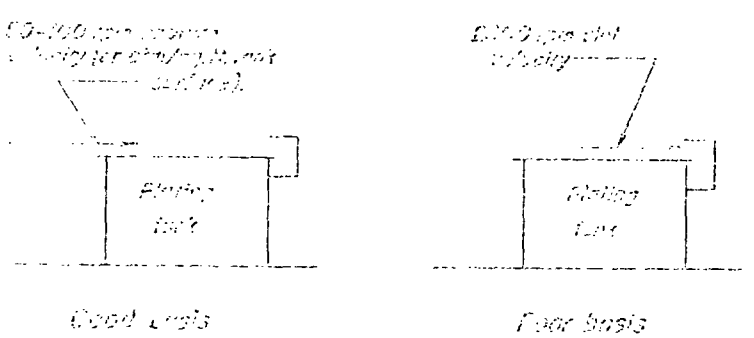

AMERICAN CONFERENCE OF GOVERNMENTAL INDUSTRIAL HYGIENISTS	
PRINCIPLES OF EXHAUST HOODS	
DATE 1-61	Fig. 4-11

CAPCO KIN 0000490

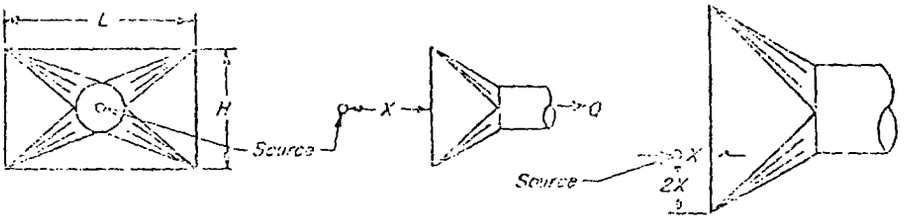

FREELY SUSPENDED HOOD

$Q = (10X^2 + A)V$

Refer to Section 4

LARGE HOOD

Large hood, X small -- measure X perpendicular to hood face, not less than 2X from hood edge.

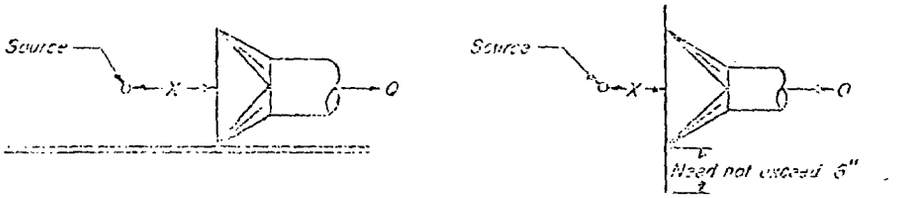

HOOD ON BENCH OR FLOOR

$Q = 0.75(10X^2 + A)V$

HOOD WITH WIDE FLANGE

$Q = 0.75(10X^2 + A)V$

SUSPENDED HOODS

(Small side-draft hoods)

Q = Required exhaust volume, cfm

X = Distance from hood face to farthest point of contaminant release, feet

A = Hood face area, sq ft

V = Capture velocity, fpm, at distance X.

Note: Air volume must increase as the square of distance of the source from the hood. Defining by flanging or by placing on bench, floor, etc. has a beneficial effect.

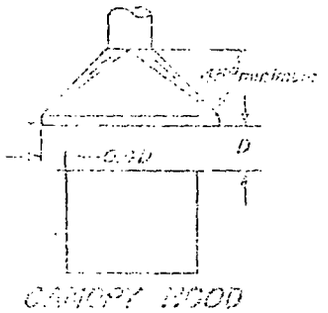

CANOPY HOOD

Q = 1.4 PDV (P = perimeter of tank, feet)

Not recommended if material is toxic and workers must bend over source. V ranges from 50 to 200 fpm depending on crossdrafts. Side curtains on two or three sides to provide a semi-booth or booth are desirable. Suitable for steam vapor or other innocuous material.

AMERICAN CONFERENCE OF GOVERNMENTAL INDUSTRIAL HYGIENISTS	
HOOD DESIGN DATA	
DATE 1-66	Fig. 4-14

CAPCO KIN 0000491

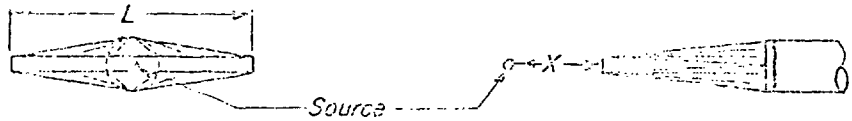

FREELY SUSPENDED SLOT
$Q = 3.7LVX$

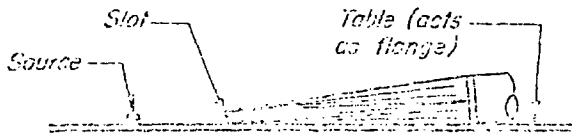

SLOT ON TABLE OR BENCH
$Q = 2.8LVX$

Q = Required exhaust volume, cfm
X = Distance, feet, hood face to farthest point of source (usually on centerline of hood)
V = Capture velocity, fpm, at distance X
L = Length, feet, of hood, slot, table, tank, etc
W = Width, feet, of table, tank, etc

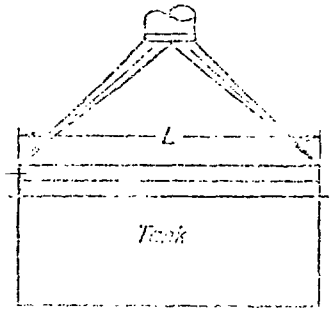

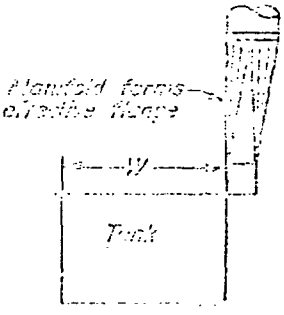

FLANGED SLOT
$Q = CLV$



SLOT ON TANK
$Q = C_1LV$
C_1 = built Q in each slot if slots on both sides

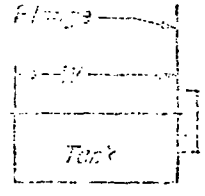

FLANGED SLOT
$Q = CLV$

[illegible]

AMERICAN CONFERENCE OF GOVERNMENTAL INDUSTRIAL HYGIENISTS

HOOD DESIGN DATA

DATE 1-88 | FIG. 4-15

CAPCO KIN 0000492

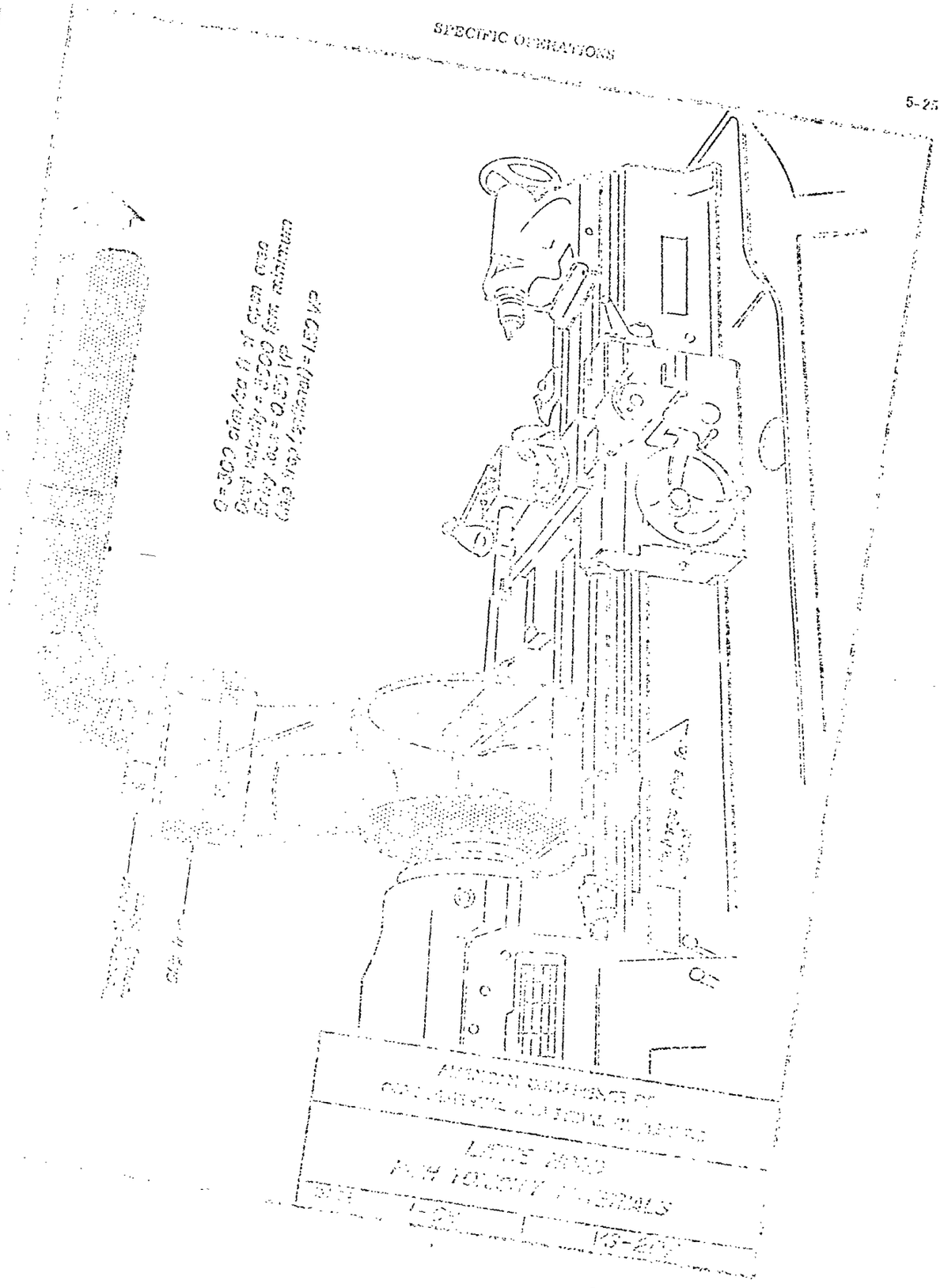

CAPCO KIN 0000493

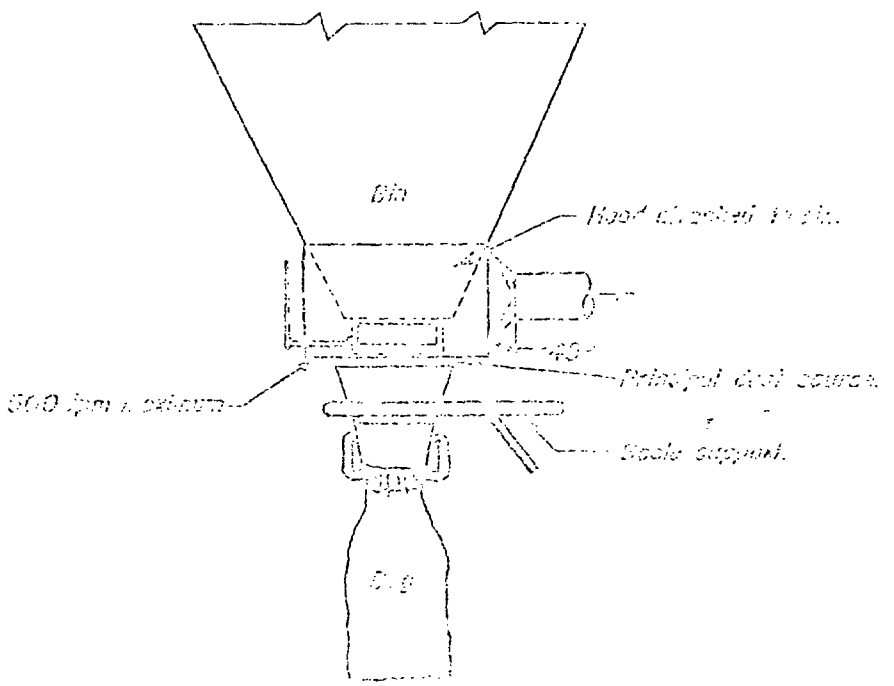

CAPCO KIN 0000494

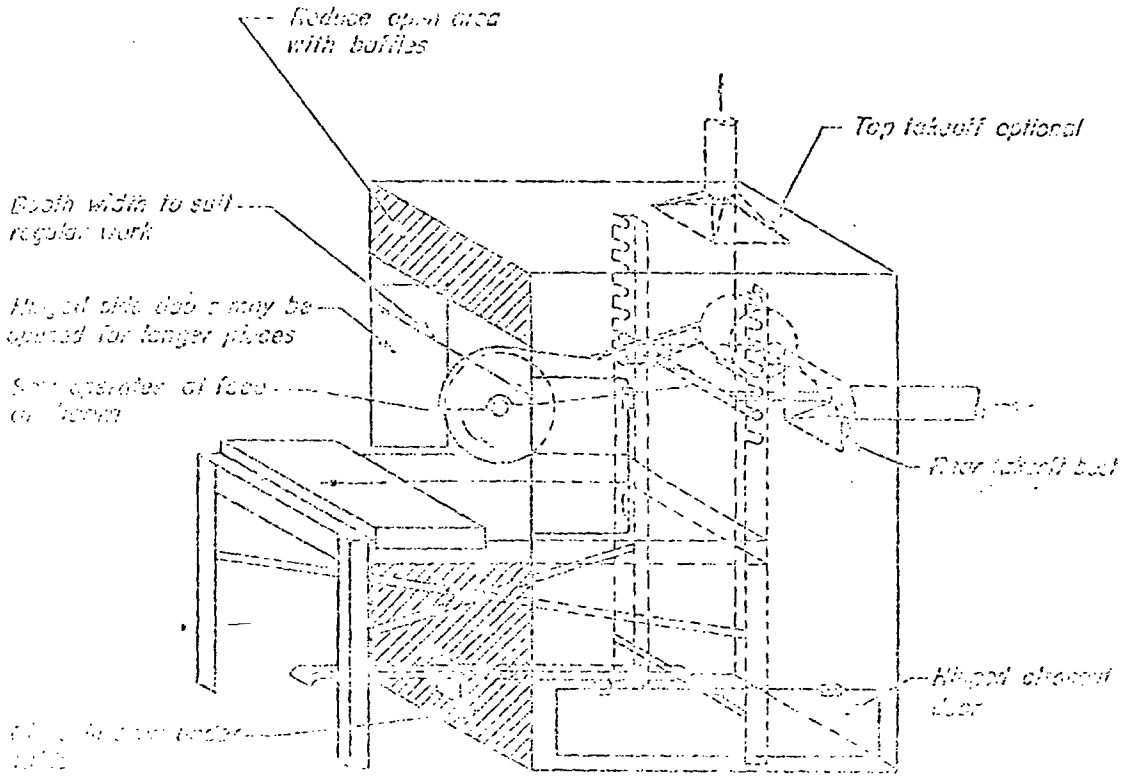

CAPCO KIN 0000495

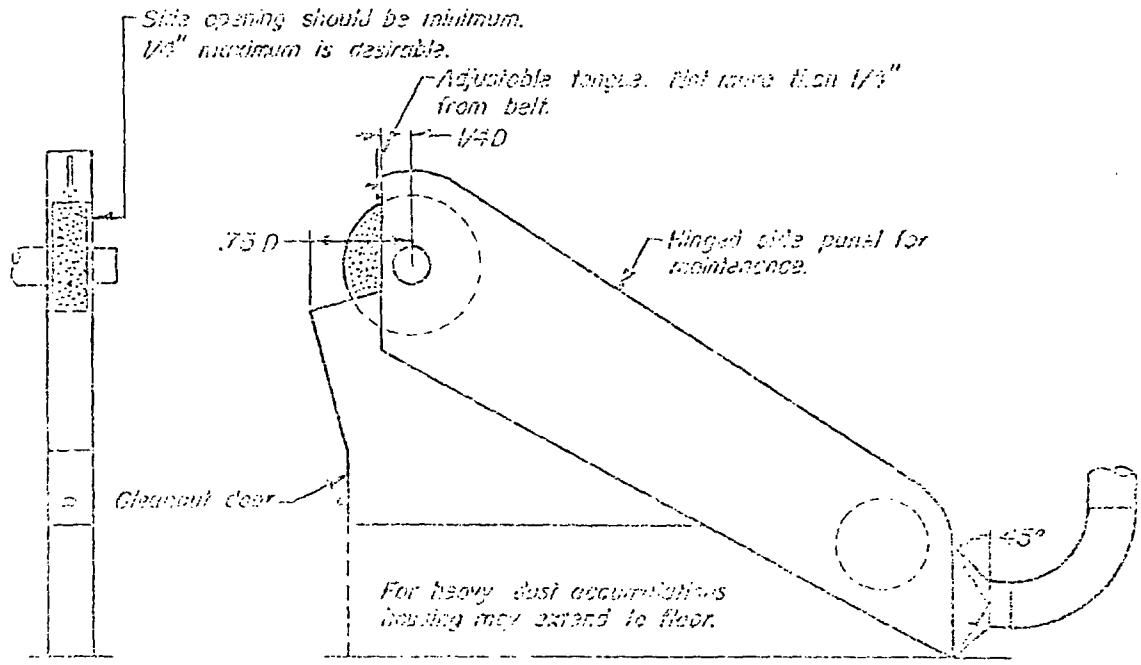

Belt width inches	Exhaust volume cfm	Exhaust volume cfm
	Good enclosure *	Poor enclosure
1 1/2	220	300
2	300	300
3	500	750
4	610	900
5	750	1200
6	1200	1500

* Hood as shown. No more than 25% of wheel exposed.

Entry Loss = 0.40 VP

Duct velocity = 3500 fpm minimum

Note:

For titanium and magnesium eliminate hopper and use 5000 fpm through hood cross section.

AMERICAN CONFERENCE OF GOVERNMENTAL INDUSTRIAL HYGIENISTS

BACKSTAND IDLER POLISHING MACHINE

DATE 1-64 | VS-402

CAPCO KIN 0000496

CEMENT ASBESTOS PRODUCTS COMPANY

WOODWARD, ALABAMA

MAKING ASBESTOS-CEMENT PIPE

Introduction

Asbestos-cement, as the product is called, is made from three principal ingredients: asbestos fibre, cement, and silica. Mixed in preset proportions, the ingredients are consolidated under pressure to form pipes having dense, uniform walls. After formation, the pipes are subjected to a steam-curing process that improves their stability and structural strength. The resulting product is a strong, corrosion-resistant pipe suitable for underground piping and industrial lines. For example, such pipes are used for water and sewer systems, irrigation, electrical conduit, ducts, vents, flues, and stacks.

In 1904 when asbestos-cement was introduced in the United States, it was in its simplest form, a plain gray slate, cured under natural room conditions, but it has since progressed from this simplicity.

Most people who use asbestos-cement products consider them as a masonry product, but the manufacturer of asbestos-cement knows that there are two major classifications of asbestos-cement products--normal cure and autoclaved or steam cure-- and two distinct manufacturing processes--the wet method and the dry process--which give definite characteristics and determine where the asbestos-cement products are used. The method used by Capco is the wet method for pipe forming and then autoclaving or steam curing.

Composition and Basic Materials

In normal curing the product, as it comes from the manufacturing machine, is allowed to air cure at atmospheric pressure or in a moist chamber. There are those who have the mistaken idea that the cement has to dry in order to cure. The opposite is true, not only for asbestos-cement but also for all products made with hydraulic Portland cement. It is necessary at all times to keep masonry products moist to hydrate the cement for at least 28 days, a period at which the composition has approximately 90 per cent of its theoretical strength. In work done at the Portland Cement Association it goes even further and states that in atmospheres of under 50 per cent relative humidity cement fails to hydrate.

In normal cure manufacture asbestos-cement pipes leave the machine with a water content of 20 to 25 per cent, thus insuring adequate water for hydration.

In concrete work subjected mainly to compression, only about 15 per cent cement is required, but with normal cure asbestos-cement as much as 75 per cent cement is used for the strength that is required for these relatively thin members.

For an autoclave product the formula is similar to a normal cure product except that silica, 200 mesh, replaces part of the Portland cement in a silica/cement ratio of .6; or, the silica is 40 per cent of the total weight of the cement and silica.

The other difference of an autoclave mix is the cure; an autoclave mix must be autoclaved at high steam pressures. After forming, the autoclave product is precured first in moist heat oven for one to one and a half hours, next air cured for four to eight hours, and then steamed in an autoclave at 100 - 150 p.s.i., about 350 degrees Fahrenheit for eight to sixteen hours, depending on the pressure in the autoclave and also on the pipe being manufactured. Usually thicker pipes require longer steaming.

The quantity of asbestos in the mix has a bearing on the strength of the product. Each pipe size and service may require a different percentage of fibre, determined from experience and the strength necessary for a satisfactory performance.

For many years it was thought that long-length fibre was necessary for good strength and that the longer the length the better the product. For pipe this is partially true, but openness, degree of fiberization, and freedom from grit are more important than just length alone.

The strong asbestos fibres behave similarly to the steel bars used in reinforcing concrete.

The fibres used involve Groups 4, 5, and 6 of the Canadian classification. These grades of chrysotile asbestos are generally classified as medium length fibre; they are used extensively in the manufacture of asbestos-cement pipes.

One basic requirement for the asbestos is that it must be fully fiberized prior to mixing it with cement in order to obtain the best properties in the final product. It is also important to remove or minimize such impurities as dust and grit.

The mixing of the asbestos and cement slurry is highly important in the wet mechanical process, because the slurry must be distributed to form a thin film across the entire width of the machine. The open fibres from Kollergang are combined with the cement and mixed with water in a turbopulper fitted with rotors in order to open remaining clusters of fibres. The relatively heavy paste mixture in the turbopulper is delivered to a stirring

CAPCO KIN 0000498

vat where it is pumped into overhead containers for delivery to pipe machine or recirculated to this mixer. It is important that agitation be constant and effective in order to prevent separation and settling of the solids in the slurry.

The slurry flows to cylinder vats of pipe machine which are fitted with paddle agitators to prevent settling of the stock. There are two of these vats on the machine. Each vat contains a horizontal cylinder covered with a fine wire mesh screen and fitted with seals at its ends so that flow can occur out of the vat and only through the wire, thus leaving a thin, even film of stock deposited on its surface while removing the major part of the water. The thickness of the film depends on the slurry level in the vat, its consistency, and the speed of rotation of the cylinder. The machine is usually operated so that the film deposited is approximately .002 to .010 inches thick.

The continuous woven felt travels above these cylinders with its hairy side toward them; it is kept in firm uniform contact with them by heavy rubber-covered rolls. At the contact surface, the film of stock is transferred to the felt and some water is removed. Each cylinder adds its film thickness to the web of stock on the felt. Additional water is drawn from the web by means of a vacuum box placed under the felt as it travels toward the cast iron or steel mandrel. There is a vacuum box between the vats to seat the stock web firmly on the felt.

As the web of stock passes under the mandrel, it is transferred to the mandrel in a continuous operation until the pipe is built up to the desired thickness.

The water removed during this operation is returned to the mixing area of the machine. This water contains a small quantity of asbestos and cement from the stock that has passed through the screens and the felts. It is first retained for a period of time in settling tanks to clarify it. In addition the water very rapidly becomes saturated with soluble materials from the Portland cement. This latter operation is generally beneficial because it eliminates further leaching of lime from the cement as the process continues. The solids separated from the water in the settling tanks are returned to the mixing chambers separately from the clarified water.

When the felt is returned toward the vats, it is cleaned by means of shower sprays and vacuum to remove any adhering stock particles. It is subjected to considerable strain and wear; usually it has an effective life of only six to twelve days. Similarly, it is necessary to prevent the cylinder screens from clogging. They are cleaned continuously during operation with a shower spray immediately after the film of stock has been released and before it is dipped into the vat for a new film.

The process needs to be controlled closely. Attention to cleanliness is important; otherwise, there may be clogging of the cylinder screens and the felt, and an inferior product may result.

CAPCO KIN 0000499

The experimental manufacture of asbestos-cement pressure pipes was started in Italy in 1913. Progress was rapid, and by 1921 asbestos-cement pipes had been accepted in Europe. At that time the British Ministry of Health approved the use of the pipe for watermains. They provided for loans for these pipes with a repayment period of thirty years; this period represented the same period allowed for cast iron pipes.

This type of pipe gradually superseded both metal and ceramic piping in a large number of applications because of the fact that they are resistant to corrosion, impervious to and free from electrolytic action when buried in the earth, light-weight, elastic, strong, resistant to compression, economical to install, and unaffected by temperature changes.

Tests have been conducted on pipes after thirty years in service with the conclusion that they had retained their original properties. These pipes have a smooth, glossy, cylindrical internal surface, and offer very low hydraulic frictional resistance to the flow of liquids. The Italit Mazza asbestos-cement pipes manufactured by Eternit, Genoa, Italy, are still in operation throughout the world. Their experimental data shows that the carrying capacity of pipe is on an average of 25 per cent greater than that of new cast iron pipes and 30 to 60 per cent greater than that of old cast iron pipes, all being of the same internal diameter.

Asbestos-cement pressure pipes are manufactured on costly and complex machines which are automatically operated by means of hydraulic and electrical controls. The pipes are built up of a continuous, uniformly thin and highly compressed film of asbestos-cement.

The Mazza process is the most important commercial process used in the manufacture of pipes. The diameter of mandrels varies from three to fifty inches. Because of their weight, the larger diameter mandrels are more difficult to handle. These large mandrels are usually mounted in pairs, one attached to each side of the machine. The machine permits wrapping on one mandrel as the previously wrapped pipe is withdrawn from the other mandrel.

CAPCO KIN 0000500

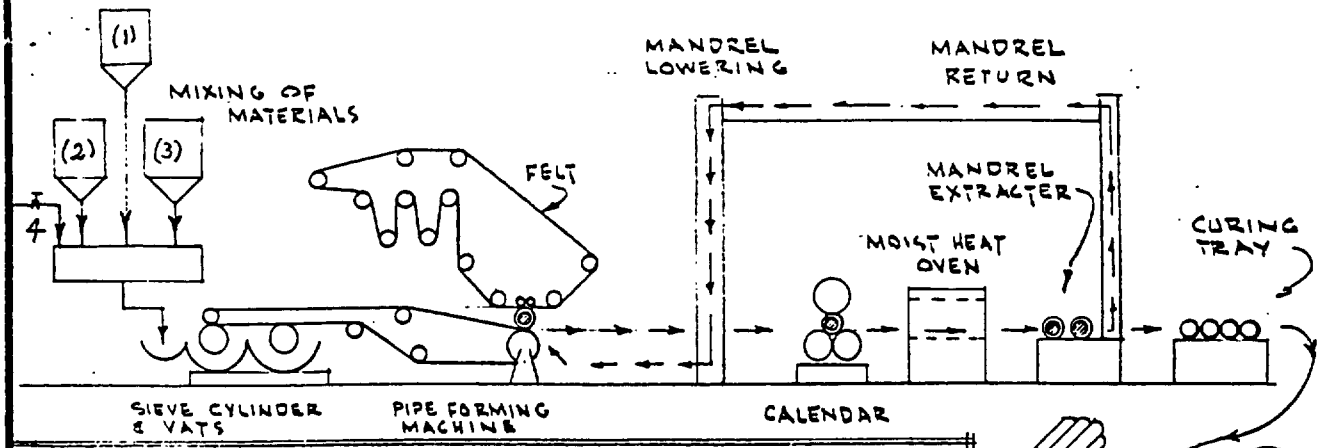

(1) Asbestos Fibers
(2) Cement
(3) Silica flour
(4) Water

Flow diagram illustrates major equipment items used in forming asbestos-cement pipes. A mixture of asbestos fibers, cement, silica, and water is formed on metal mandrels in pipe forming machine. After calendering to loosen pipe from mandrel, pipe and mandrel then move through an oven for precuring, then to a mandrel extractor. From the extractor, mandrels are returned by conveyor to the pipe forming machine, and pipe are stacked in curing trays.

The pipe stacked in curing trays are moved to auto-clave area and allowed to air dry for several hours. The pipe on curing trays are then placed in auto-claves which are high pressure steam curing vessels.

After curing in the auto-claves the pipe are first subjected to a bending or flexural test, then machined on each end, then tested with internal water pressure and finally packaged for storing and shipping.

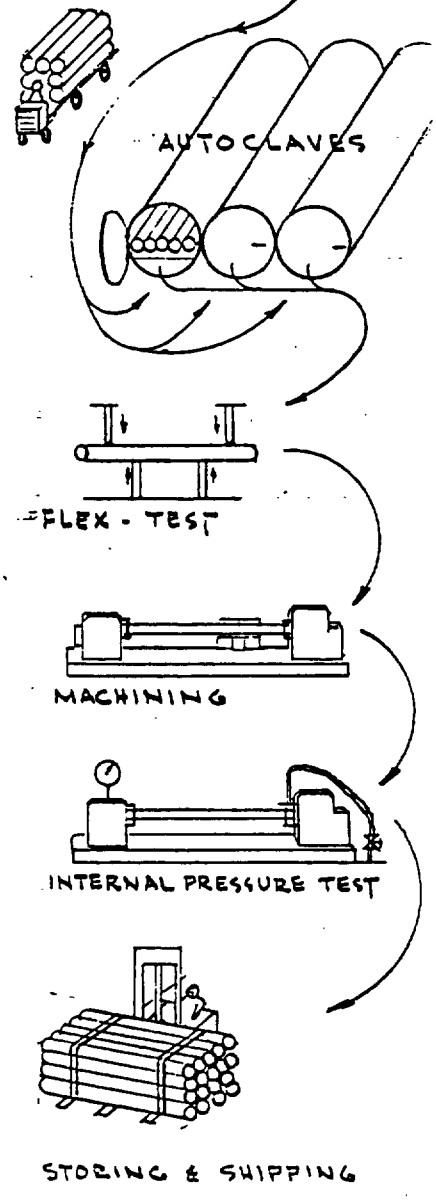

CEMENT ASBESTOS PRODUCTS CO. RAGLAND, ALABAMA	DIAGRAMATIC OF PIPE MANUFACTURE.			
DRAWN: TC	APPROVED:	SCALE: —	DATE: 4-13-65	DWG. NO. A- 9

CAPCO KIN 0000501

CEMENT ASBESTOS PRODUCTS COMPANY
Sales Offices, Woodward, Alabama 35189 / Phone 205 • 428-1241 / Plant, Ragland, Alabama 35131

MAKING ASBESTOS-CEMENT PIPE

Introduction

Asbestos-cement, as the product is called, is made from three principal ingredients: asbestos fibre, cement, and silica. Mixed in preset proportions, the ingredients are consolidated under pressure to form pipes having dense, uniform walls. After formation, the pipes are subjected to a steam-curing process that improves their stability and structural strength. The resulting product is a strong, corrosion-resistant pipe suitable for underground piping and industrial lines. For example, such pipes are used for water and sewer systems, irrigation, electrical conduit, ducts, vents, flues, and stacks.

In 1904 when asbestos-cement was introduced in the United States, it was in its simplest form, a plain gray slate, cured under natural room conditions, but it has since progressed from this simplicity.

Most people who use asbestos-cement products consider them as a masonry product, but the manufacturer of asbestos-cement knows that there are two major classifications of asbestos-cement products -- normal cure and autoclaved or steam cure -- and two distinct manufacturing processes -- the wet method and the dry process -- which give definite characteristics and determine where the asbestos-cement products are used. The method used by Capco is the wet method for pipe forming and then autoclaving or steam curing.

Composition and Basic Materials

In normal curing the product, as it comes from the manufacturing machine, is allowed to air cure at atmospheric pressure or in a moist chamber. There are those who have the mistaken idea that the cement has to dry in order to cure. The opposite is true, not only for asbestos-cement but also for all products made with hydraulic Portland cement. It is necessary at all times to keep masonry products moist to hydrate the cement for at least 28 days, a period at which the composition has approximately 90 per cent of its theoretical strength. In work done at the Portland Cement Association, it goes even further and states that in atmospheres of under 50 per cent relative humidity, cement fails to hydrate.

In normal cure manufacture, asbestos-cement pipes leave the machine with a water content of 20 to 25 per cent, thus insuring adequate water for hydration.

In concrete work subjected mainly to compression, only about 15 per cent cement is required; but with normal cure asbestos-cement, as much as 75 per cent cement is used for the strength that is required for these relatively thin members.

For an autoclave product, the formula is similar to a normal cure product except that silica, 200 mesh, replaces part of the Portland cement in a silica/cement ratio of .6; or, the silica is 40 per cent of the total weight of the cement and silica.

The other difference of an autoclave mix is the cure; an autoclave mix must be autoclaved at high steam pressures. After forming, the autoclave product is pre-cured first in moist heat oven for one to one and a half hours, next air cured for four to eight hours, and then steamed in an autoclave at 100 - 150 p.s.i., about 350 degrees Fahrenheit for eight to sixteen hours, depending on the pressure in the autoclave, and also on the pipe being manufactured. Usually thicker pipes require longer steaming.

The quantity of asbestos in the mix has a bearing on the strength of the product. Each pipe size and service may require a different percentage of fibre, determined from experience and the strength necessary for a satisfactory performance.

For many years it was thought that long-length fibre was necessary for good strength and that the longer the length the better the product. For pipe, this is partially true; but openness, degree of fiberization, and freedom from grit are more important than just length alone.

The strong asbestos fibres behave similarly to the steel bars used in reinforcing concrete.

The fibres used involve Groups 4, 5, and 6 of the Canadian classification. These grades of chrysotile asbestos are generally classified as medium length fibre; they are used extensively in the manufacture of asbestos-cement pipes.

One basic requirement for the asbestos is that it must be fully fiberized prior to mixing it with cement in order to obtain the best properties in the final product. It is also important to remove or minimize such impurities as dust and grit.

The mixing of the asbestos and cement slurry is highly important in the wet mechanical process, because the slurry must be distributed to form a thin film across the entire width of the machine. The open fibres from Kollergang are combined with the cement and mixed with water in a turbopulper fitted with rotors in order to open remaining clusters of fibres. The relatively heavy paste mixture in the turbo-pulper is delivered to a stirring vat where it is pumped into overhead containers for delivery to pipe machine or recirculated to this mixer. It is important that agitation be constant and effective in order to prevent separation and settling of the solids in the slurry.

The slurry flows to cylinder vats of pipe machine which are fitted with paddle agitators to prevent settling of the stock. There are two of these vats on the machine. Each vat contains a horizontal cylinder covered with a fine wire mesh screen and fitted with seals at its ends so that flow can occur out of the

vat and only through the wire, thus leaving a thin, even film of stock deposited on its surface while removing the major part of the water. The thickness of the film depends on the slurry level in the vat, its consistency, and the speed of rotation of the cylinder. The machine is usually operated so that the film deposited is approximately .002 to .010 inches thick.

The continuous woven felt travels above these cylinders with its hairy side toward them; it is kept in firm uniform contact with them by heavy rubber-covered rolls. At the contact surface, the film of stock is transferred to the felt and some water is removed. Each cylinder adds its film thickness to the web of stock on the felt. Additional water is drawn from the web by means of a vacuum box placed under the felt as it travels toward the cast iron or steel mandrel. There is a vacuum box between the vats to seat the stock web firmly on the felt.

As the web of stock passes under the mandrel, it is transferred to the mandrel in a continuous operation until the pipe is built up to the desired thickness.

The water removed during this operation is returned to the mixing area of the machine. This water contains a small quantity of asbestos and cement from the stock that has passed through the screens and the felts. It is first retained for a period of time in settling tanks to clarify it. In addition, the water very rapidly becomes saturated with soluble materials from the Portland cement. This latter operation is generally beneficial because it eliminates further leaching of lime from the cement as the process continues. The solids separated from the water in the settling tanks are returned to the mixing chambers separately from the clarified water.

When the felt is returned toward the vats, it is cleaned by means of shower sprays and vacuum to remove any adhering stock particles. It is subjected to considerable strain and wear; usually it has an effective life of only six to twelve days. Similarly, it is necessary to prevent the cylinder screens from clogging. They are cleaned continuously during operation with a shower spray immediately after the film of stock has been released and before it is dipped into the vat for a new film.

The process needs to be controlled closely. Attention to cleanliness is important; otherwise, there may be clogging of the cylinder screens and the felt, and an inferior product may result.

The experimental manufacture of asbestos-cement pressure pipes was started in Italy in 1913. Progress was rapid, and by 1921 asbestos-cement pipes had been accepted in Europe. At that time, the British Ministry of Health approved the use of the pipe for watermains. They provided for loans for these pipes with a repayment period of thirty years; this period represented the same period allowed for cast iron pipes.

CAPCO KIN 0000504

This type of pipe gradually superseded both metal and ceramic piping in a large number of applications because of the fact that they are resistant to corrosion, impervious to and free from electrolytic action when buried in the earth, light-weight, elastic, strong, resistant to compression, economical to install, and unaffected by temperature changes.

Tests have been conducted on pipes after thirty years in service with the conclusion that they had retained their original properties. These pipes have a smooth, glossy, cylindrical internal surface, and offer very low hydraulic frictional resistance to the flow of liquids. The Italit Mazza asbestos-cement pipes manufactured by Eternit, Genoa, Italy, are still in operation throughout the world. Their experimental data shows that the carrying capacity of pipe is on an average of 25 per cent greater than that of new cast iron pipes and 30 to 60 percent greater than that of old cast iron pipes, all being of the same internal diameter.

Asbestos-cement pressure pipes are manufactured on costly and complex machines which are automatically operated by means of hydraulic and electrical controls. The pipes are built up of a continuous, uniformly thin and highly compressed film of asbestos-cement.

The Mazza process is the most important commercial process used in the manufacture of pipes. The diameter of mandrels varies from three to fifty inches. Because of their weight, the larger diameter mandrels are more difficult to handle. These large mandrels are usually mounted in pairs, one attached to each side of the machine. The machine permits wrapping on one mandrel as the previously wrapped pipe is withdrawn from the other mandrel.

Cement Asbestos Pipe Company

Asbestos Cement Pipe Manufacture

CAPCO KIN 0000506

TABLE OF CONTENTS

Subject	Pages
Summary	1-3
I Mixing Plant	4
A. Raw Materials	4
B. Fiber Preparation	6
C. Batch Weight	6
D. Mixing	6
E. Process Water	6
F. Stock Feed to the Machine	7
II Pipe Machine Operation	7
A. Vats and Molds	7-11
B. Bottom Felt and Vacuum Dewatering Boxes	11
C. The Press	12
D. Bottom Felt Cleaning Devices	13
E. Top Felt	14
F. The Press Hydraulic System	14
G. The Calender	15
III Pipe Curing	16
A. Pre-cure Oven	16
B. Wet Room	17
C. Autoclaving	18

CAPCO KIN 0000507

SUMMARY

Cement, silica flour, and asbestos fiber are batched by weight and mixed in water to form a slurry. This slurry is pumped into the two vats of the pipe machine, where two cylinders covered with a fine mesh screen are mounted. Because the cylinder ends are sealed, the water pressure forces the slurry through the immersed screen, thereby depositing asbestos fibers - which in turn trap a cake of cement and silica flour. In a way closely analogous to pouring slurry into a bucket having only a wire screen for a bottom, the thickness of the film on the wire will vary with the pressure head, the consistency and viscosity of the slurry, time, the compressibility of the cake, and the number of fibers available to close the openings in the screen.

Over the top of the cylinders passes a cloth belt made of a woven felted material containing wool and nylon. The felt is held tightly against the cylinder by weighted rolls so that the felt drives the cylinders as it moves. Because of water's surface tension the wet film is picked up by the smoother felt from the rough wire. After the felt picks up both stock films

CAPCO KIN 0000508

to form a sheet, it passes over a suction box which partially dewaters the sheet prior to roll-up.

The sheet is rolled up to the required pipe wall thickness on a metal pipe or mandrel in a press which consists of a large roll underneath and a pair of smaller, hydraulically loaded rolls above the mandrel. Between the mandrel and the upper press rolls is a second felt which prevents transfer of the sheet to the top rolls and which has voids in the weave for acceptance of water pressed from the pipe wall.

After roll-up is completed, the felts are stopped, the upper press rolls are raised and the old mandrel is replaced by a new, bare mandrel for the next roll-up cycle.

The newly formed pipe is then loosened from the mandrel, or calendered, by blowing compressed air under the pipe wall next to the mandrel and rolling to complete the loosening.

Next the mandrel with pipe is conveyed through a heated tunnel where a combination of curing and drying hardens the pipe enough to permit stripping without damage. After stripping, the pipe are loaded by vacuum cups into a metal tray.

In these trays the pipe are stored in a warm room where overhead spray showers return moisture lost in the pre-cure

tunnel. From the wet room the trays are transferred to autoclaves for final curing. At approximately 350°F the high pressure steam brings about an accelerated cure of the cement and causes unstable products of hydrated cement to combine with the free silica to form a strong bond around the reinforcing strands of asbestos.

CAPCO KIN 0000510

I Mixing Plant

A. Raw Materials
1. Cement
a. Properties
(1) Set time: The cement should be designed to set as rapidly as possible after roll-up in order to minimize mandrel inventory and wet-end handling damage. If the cement sets before roll-up, water retention increases, build-up occurs in the wet portion of the operation, and strength is lost.

(2) Strength: The ultimate strength of the cement is affected by the chemical composition, the fineness of grind, and the water retention.

(3) Fineness of grind: While a finer grind improves early strength in concrete, the increase in water retention in the pipe wall associated with a fine grind may result in an overall weakening of the pipe.

(4) Importance of uniformity: In order to produce pipe of consistent quality, it is mandatory that the cement properties remain constant. For a uniform cement, other manufacturing variables may be adjusted to give optimum results.

2. Silica flour
(a) Chemical requirements: The silica should be in a pure crystalline form.

(b) Physical properties: Chemical reactivity in-

creases with fineness, but at the expense of higher water retention.

3. Asbestos Fiber

(a) Chrysotile or white fiber: In general as fiber grade or length increases - strength increases, filtering time decreases, water retention is relatively constant, and bulk increases. As a particular grade is opened to a higher surface area - strength increases moderately, filtering time decreases but with more water retained, and bulk increases moderately.

(b) Crocidolite or blue fiber: For a given grade of blue fiber, additional opening results in - considerably increased strength, reduced filtering time, considerably increased water retention, and a rapid increase in bulk.

4. Reclaimed scrap pipe

(a) Method of preparation: After primary crushing the scrap is fed to a closed circuit consisting of a hammermill and screen. Above the screen an air suction duct lifts the fine reclaim product while the oversize is returned to the hammermill.

(b) Benefits: The reclaim reduces material costs and improves filtration by rendering the stock less compressable.

(c) Limitations: The reduced compressability of the

stock results in lower pipe density.

B. Fiber Preparation

1. Kollergang

The Kollergang, which is an edge-runner, opens the crude bundles of fiber and mixes the blue and white fibers. A small amount of water is added to aid in opening the blue and to reduce dust.

2. Turbopulper

The turbopulper has a horizontal shaft turning a pair of vertical discs having radial slots which open into curved scoops. When water and fiber are violently agitated in the pulpers, final mixing and opening is achieved. Fiber opening is a function of time and slurry viscosity.

C. Batch weights

Fiber and reclaim are weighed in a hopper on beam scales controlled by electric eye scanners at the scale head. At present, the cement and silica are weighed on belt scales but beam scales will replace them when delivered.

D. Mixing

The turbopulper serves to mix the entire batch into a slurry as well as to open the fiber.

E. Process water

Process water variables which influence pipe manufacturing are temperature, which influences cement set time

and filtering - and disolved minerals, which alter cement reactions. Process water is recirculated in a closed system in order to conserve water and to maintain stable water properties. To prevent too fast a set of the cement when starting up with fresh water, hydrated lime is added to raise process water alkalinity.

F. Stock feed to the machine
After each batch is mixed a pump transfers it to a holding chest containing a ribbon agitator. A small stock pump constantly pumps stock from the holding chest to a small stock chest. When a tapered plug in the small stock pump is raised, the stock flows to the machine; when lowered, the stock overflows back into the holding chest.

In the piping to the machine, a tee mixes process water with the stock to dilute the slurry. This thinned slurry discharges into a mixing cone and overflows into three troughs to the vats.

II Pipe Machine Operation

A. Vats and molds
In the bottom of both vats are two flat-bladed agitators which maintain the solids in suspension and aid in aligning fiber circumferentially around the molds - thereby giving the

hoop strength needed in pressure pipe. The paddles must turn fast enough to provide a uniform slurry consistency but not so fast that the film is swept from the mold wire.

The mold is covered first with a spirally wound wire, next a ten mesh stainless wire cloth and finally a 30 or 40 mesh stainless face wire. The wire weave is normally "wrong way" which means the crimped wires run axially across the face. The 30 mesh screen provides a more rugged cover than the 40 mesh and the larger openings do not seem to affect strength adversely.

Variables which affect the thickness of the film on the cylinder wire are as follows: (1) The thickness of the film increases as the proportion of asbestos increases - first because without the asbestos the cement and silica would pour through the wire and second because the asbestos reduces the compressibility of the film, thereby leaving voids for the passage of more water.

(2) The thickness increases for an increase in slurry temperature, since slurry viscosity drops rapidly as the temperature rises.

(3) The thickness decreases as the consistency or

viscosity of the slurry increases. For a given blend the consistency increases as the concentration of solids increases. For a given blend and concentration, the consistency increases as the asbestos surface area increases.

(4) The thickness of the film increases with time, but at a decreasing rate. There are two times to consider: First, the time that a given part of the screen is under the slurry while the machine is running - an inverse function of felt speed; second, the time that the machine is stopped, a direct function of mandrel change time.

Although the formation of the film on the mold gives the appearance of being elementary, the precentage, types, and degree of opening of the asbestos fibers charged into the vats is vital to the machine operation. The production rate of the machine may be determined by the rate of film pickup on the molds, but a high production rate is costly unless the fiber strength and opening is balanced with cement and silica properties to produce a sheet which the pipe machine felts, vacuums, and press can sucessfully convert into a sound pipe wall.

In general, as asbestos fiber is progressively opened,

the strength increases, the filterability decreases, the bulk increases (thereby decreasing density), and the water retention increases. As compared to white fiber, the blue asbestos exhibits a more rapid increase in strength but also a much higher water retention increase.

As an aid to the agitators in maintaining uniform vats, an overflow system is in use. The flow over a weir toward the front of the machine flows down a trough to a pump which returns it to the mixing cone at the rear of the machine. A high volume overflow may also aid in aligning fiber for greater hoop strength. Because of the mixing which takes place with the overflow in the cone, water may be allowed to flow into the machine during mandrel changes to replace the water lost from the vats through the molds.

For some random alignment of fibers to increase flexual strength, a rake having long blades immersed in the slurry next to one of the molds is slowly oscillated. There is some question about the rake's effectiveness, but if it does promote flexual strength it should not be used for hydro pipe i.e., 10" or larger pipe, which requires no flexual strength test.

The film width is controlled by applying an adhesive

or other coating to fill the face wire openings outside the desired film width - these coated areas are known as deckles and are 13'-2" apart.

B. Bottom felt and vacuum de-watering boxes
After the bottom felt passes over the first cylinder mold it passes under a vacuum slit box which pulls the stock into the felt and partially dewaters both the felt and the sheet before the second mold. After the second film is picked up, the two-layered sheet is carried back toward the front of the machine with the sheet still on the outside but now on the top, instead of the bottom of the felt loop. Sheet and felt are again dewatered while passing over a larger vacuum box pulling from 10 to 16 inches of mercury. The flow of air varies as the square root of the pressure difference across the felt - so that increasing the vacuum 50% only changes the air flow by 22% with other conditions constant.

The moisture remaining in the sheet will vary as follows: The moisture decreases as fiber content increases, as temperature increases, and as the sheet thickness decreases; the moisture increases as a given content of fiber is opened, as cement and silica fineness increase, and as water contact time with the stock increases.

Also, affecting moisture release are the dust content of the fibers, the degree of hydration of the cement, and the design and cleanliness of the felt. There is a limit to what can be accomplished with higher vacuums because as the vacuum increases the accompanying increase in felt tension tends to reduce the felt weave openings.

C. The Press

The roll-up of the sheet on a mandrel is probably the most critical operation in pipe making - for at this point the thin, tender sheet must be compacted into a dense, thick mass to form the pipe wall. High densities and strength require low moisture content after roll-up, and it is the press which must reduce the moisture to an acceptable level. While increasing the press roll loading will squeeze out more water, pressures cannot be increased beyond a point which causes the pipe wall to shift or tear. Once shifting or tearing occurs, the bond between the plies or between fiber and cement is permanently weakened.

The factors limiting pressures are water content of the sheet, sheet thickness, drainage capacity of the felts, the lubricity or slipperiness of the stock, and the uniformity of

pressure across the mandrel.

For a given pressure curve the moisture in the pipe wall will vary as follows: Moisture will decrease as temperature increases, as water contact time decreases, and as sheet thickness decreases; moisture will increase with more opened fibers, with finer grind cement and silica and with faster setting cement.

Blue fiber as compared to white permits the use of higher pressure but retains more water and reduces density.

D. Bottom felt cleaning devices

After leaving the bottom press roll, an inside, high volume shower floods the felt immediately before an inside worm roll. The left and right hand helixes on this roll knead and stretch the width of the felt and at the same time force shower water through the weave to flush out the imbedded stock. Next a face shower is directed 45° into the felt travel direction to wash the loosened stock away. The final shower is inside the felt at a right angle and again drives solids to the lower face. Next a whipper turning against the felt travel strikes the felt with a series of sharp raps to jar away remaining solids - much like the action of a rug beater.

CAPCO KIN 0000520

Finally, before reaching the first mold, the felt passes over a fan suction box which pulls out the soiled washing water.

E. Top Felt

The top felt transmits and cushions the press roll forces to the pipe wall. Since the press forces are spread over more pipe area than on the bottom felt, and since the sheet carrying job is reserved to the bottom felt - the physical wear and filling is far less a problem on the top felt. Consequently, cleaning on the top felt is limited to three worm rolls, a single intermittent spray shower, and a single slit vacuum box.

The DC drive speed control permits the operator to set the top felt speed at a ratio greater than one to the bottom felt - this is termed overdrive. By using a slight amount of overdrive the top felt drive carries an increased share of the press power load and is thought to assist in rolling up a tighter pipe.

F. The press hydraulic system

At the present time, the two press rolls are moved up and down by hydraulic cylinders connected to the press roll bearing housings and guided by a pair of four parallelogram

CAPCO KIN 0000521

linkages connected with two torque tubes. In order to compensate for deflection in the center of the rolls, a pair of dolly rolls transmits force from two other cylinders. When a bare mandrel is loaded in the press, a closed center hydraulic valve shifts to move the outboard and dolly roll cylinders down against the press rolls to load the mandrel at a preset pressure. When the proper pressure is reached, the fill valve centers and the pipe machine is started.

During roll-up the hydraulic circuit is isolated from any oil source. The pressure curve is controlled by a cam operated relief valve - which drains excess oil to sump as the cylinder pistons are pushed up by the increasing wall thickness.

Physically the press should impart smooth, uniform, and reproducible pressures across the pipe wall and should permit a rapid mandrel change.

By keeping mandrel change times low the excess build-up of stock on the molds during machine pauses will be minimized. This heavier mold pickup is termed a slug and may be positioned in the pipe wall by varying layer thickness and felt speed.

G. The Calender

At the calendering station, an air lance is inserted

between mandrel and pipe wall to open a gap across the pipe. By subsequent rolling the pipe is loosened around its circumference. Although a pressure roll is sometimes used on small pipe, over-opening may result.

If the mandrel is too smooth, the compressed air cannot easily penetrate across the pipe. Accordingly, the mandrels are periodically sand or shot blasted to leave a textured surface.

Every effort should be made to prevent over-opening, since an increase in pipe diameter weakens the bonds between fiber and cement. Resistance to over-opening increases with lower moisture content and with higher fiber level. The tendency to over-open increases as pipe diameter and wall thickness increase.

III Pipe Curing

A. Pre-cure Oven

The purpose of the pre-cure oven is to harden the pipe enough to permit stripping the mandrel as quickly as possible for return to the pipe machine - thereby reducing mandrel inventory. The hardening can result from cure of the cement or from drying the pipe. Ideally, all the hardening should be derived from curing rather than drying, but in practice

drying predominates.

When a pipe is rolled up in the press, some air is trapped in its wall, primarily between layers. As the pipe is rapidly heated, this blocked air expands more than the solid phase and causes the pipe to swell. As compaction or density decreases, the swelling increases rapidly and can greatly weaken the pipe.

Wetting the newly rolled up pipe will also result in destructive swelling, but as the pipe is allowed longer curing times before wetting the damage decreases. In fact, after enough strength is obtained to prevent swelling, an increase in strength will result because of the additional water available for hydration.

B. Wet Room

Pipe is placed in the wet room after pre-cure in order to replace moisture lost through drying in the oven. This room is heated and sprinkled by overhead showers, which provides uniform cement hydration regardless of outside temperature and humidity. Regulating the minimum hold time in the wet room assures that pipe will be strong enough to withstand rapid autoclave heating.

CAPCO KIN 0000524

C. Autoclaving

There are two important advantages to an autoclave cure as compared to a normal cure. First, greater strength is reached by autoclaving for a day than by normal curing for a month. This greatly reduces in-process inventory and allows flexibility in scheduling production to meet shipments.

Secondly, autoclaving imparts improved resistance to chemical attack in the ground by sulfate salts, aggressive Co_2, soft waters, and acid. At the high pressure and temperature in the autoclave, calcium hydroxide - a vulnerable hydration product of cement - combines chemically with silica flour to form a stable calcium silicate hydrate called tobermorite.

Properties which are not improved by autoclaving are permeability, brittleness, and stiffness. These undersirable tendencies may be minimized by holding curing temperature at approximately 350°F, by an adequate pre-cure, and by avoiding too rapid an increase or decrease of pressure.

The reactivity of silica increases rapidly as the particle size decreases and the strength falls sharply for particles coarser than 200 mesh (74 microns). For this

CAPCO KIN 0000525

reason silica flour should be 98% passing 200 mesh - which would be equivalent to a 3500-4000 Blaine.

Scientific studies indicate that the maximum strength will be obtained with a 70:30 or 65:35 ratio of cement to silica flour but a slightly higher proportion of silica may be used to reduce uncombined calcium hydroxide or to compensate for too low a water to cement ratio in the pipe wall.

CAPCO KIN 0000526

Cement Asbestos Pipe Company

Asbestos Cement Pipe Manufacture

CAPCO KIN 0000527

TABLE OF CONTENTS

Subject	Pages
Summary	1-3
I Mixing Plant	4
A. Raw Materials	4
B. Fiber Preparation	6
C. Batch Weight	6
D. Mixing	6
E. Process Water	6
F. Stock Feed to the Machine	7
II Pipe Machine Operation	7
A. Vats and Molds	7-11
B. Bottom Felt and Vacuum Dewatering Boxes	11
C. The Press	12
D. Bottom Felt Cleaning Devices	13
E. Top Felt	14
F. The Press Hydraulic System	14
G. The Calender	15
III Pipe Curing	16
A. Pre-cure Oven	16
B. Wet Room	17
C. Autoclaving	18

SUMMARY

Cement, silica flour, and asbestos fiber are batched by weight and mixed in water to form a slurry. This slurry is pumped into the two vats of the pipe machine, where two cylinders covered with a fine mesh screen are mounted. Because the cylinder ends are sealed, the water pressure forces the slurry through the immersed screen, thereby depositing asbestos fibers - which in turn trap a cake of cement and silica flour. In a way closely analogous to pouring slurry into a bucket having only a wire screen for a bottom, the thickness of the film on the wire will vary with the pressure head, the consistency and viscosity of the slurry, time, the compressibility of the cake, and the number of fibers available to close the openings in the screen.

Over the top of the cylinders passes a cloth belt made of a woven felted material containing wool and nylon. The felt is held tightly against the cylinder by weighted rolls so that the felt drives the cylinders as it moves. Because of water's surface tension the wet film is picked up by the smoother felt from the rough wire. After the felt picks up both stock films

to form a sheet, it passes over a suction box which partially dewaters the sheet prior to roll-up.

The sheet is rolled up to the required pipe wall thickness on a metal pipe or mandrel in a press which consists of a large roll underneath and a pair of smaller, hydraulically loaded rolls above the mandrel. Between the mandrel and the upper press rolls is a second felt which prevents transfer of the sheet to the top rolls and which has voids in the weave for acceptance of water pressed from the pipe wall.

After roll-up is completed, the felts are stopped, the upper press rolls are raised and the old mandrel is replaced by a new, bare mandrel for the next roll-up cycle.

The newly formed pipe is then loosened from the mandrel, or calendered, by blowing compressed air under the pipe wall next to the mandrel and rolling to complete the loosening.

Next the mandrel with pipe is conveyed through a heated tunnel where a combination of curing and drying hardens the pipe enough to permit stripping without damage. After stripping, the pipe are loaded by vacuum cups into a metal tray.

In these trays the pipe are stored in a warm room where overhead spray showers return moisture lost in the pre-cure

tunnel. From the wet room the trays are transferred to autoclaves for final curing. At approximately 350°F the high pressure steam brings about an accelerated cure of the cement and causes unstable products of hydrated cement to combine with the free silica to form a strong bond around the reinforcing strands of asbestos.

CAPCO KIN 0000531

I Mixing Plant

A. Raw Materials
1. Cement
a. Properties
(1) Set time: The cement should be designed to set as rapidly as possible after roll-up in order to minimize mandrel inventory and wet-end handling damage. If the cement sets before roll-up, water retention increases, build-up occurs in the wet portion of the operation, and strength is lost.

(2) Strength: The ultimate strength of the cement is affected by the chemical composition, the fineness of grind, and the water retention.

(3) Fineness of grind: While a finer grind improves early strength in concrete, the increase in water retention in the pipe wall associated with a fine grind may result in an overall weakening of the pipe.

(4) Importance of uniformity: In order to produce pipe of consistent quality, it is mandatory that the cement properties remain constant. For a uniform cement, other manufacturing variables may be adjusted to give optimum results.

2. Silica flour
(a) Chemical requirements: The silica should be in a pure crystalline form.

(b) Physical properties: Chemical reactivity in-

CAPCO KIN 0000532

creases with fineness, but at the expense of higher water retention.

3. Asbestos Fiber

(a) Chrysotile or white fiber: In general as fiber grade or length increases - strength increases, filtering time decreases, water retention is relatively constant, and bulk increases. As a particular grade is opened to a higher surface area - strength increases moderately, filtering time decreases but with more water retained, and bulk increases moderately.

(b) Crocidolite or blue fiber: For a given grade of blue fiber, additional opening results in - considerably increased strength, reduced filtering time, considerably increased water retention, and a rapid increase in bulk.

4. Reclaimed scrap pipe

(a) Method of preparation: After primary crushing the scrap is fed to a closed circuit consisting of a hammermill and screen. Above the screen an air suction duct lifts the fine reclaim product while the oversize is returned to the hammermill.

(b) Benefits: The reclaim reduces material costs and improves filtration by rendering the stock less compressable.

(c) Limitations: The reduced compressability of the

stock results in lower pipe density.

B. Fiber Preparation

1. Kollergang

The Kollergang, which is an edge-runner, opens the crude bundles of fiber and mixes the blue and white fibers. A small amount of water is added to aid in opening the blue and to reduce dust.

2. Turbopulper

The turbopulper has a horizontal shaft turning a pair of vertical discs having radial slots which open into curved scoops. When water and fiber are violently agitated in the pulpers, final mixing and opening is achieved. Fiber opening is a function of time and slurry viscosity.

C. Batch weights

Fiber and reclaim are weighed in a hopper on beam scales controlled by electric eye scanners at the scale head. At present, the cement and silica are weighed on belt scales but beam scales will replace them when delivered.

D. Mixing

The turbopulper serves to mix the entire batch into a slurry as well as to open the fiber.

E. Process water

Process water variables which influence pipe manufacturing are temperature, which influences cement set time

and filtering - and disolved minerals, which alter cement reactions. Process water is recirculated in a closed system in order to conserve water and to maintain stable water properties. To prevent too fast a set of the cement when starting up with fresh water, hydrated lime is added to raise process water alkalinity.

F. Stock feed to the machine
After each batch is mixed a pump transfers it to a holding chest containing a ribbon agitator. A small stock pump constantly pumps stock from the holding chest to a small stock chest. When a tapered plug in the small stock pump is raised, the stock flows to the machine; when lowered, the stock overflows back into the holding chest.

In the piping to the machine, a tee mixes process water with the stock to dilute the slurry. This thinned slurry discharges into a mixing cone and overflows into three troughs to the vats.

II Pipe Machine Operation

A. Vats and molds
In the bottom of both vats are two flat-bladed agitators which maintain the solids in suspension and aid in aligning fiber circumferentially around the molds - thereby giving the

hoop strength needed in pressure pipe. The paddles must turn fast enough to provide a uniform slurry consistency but not so fast that the film is swept from the mold wire.

The mold is covered first with a spirally wound wire, next a ten mesh stainless wire cloth and finally a 30 or 40 mesh stainless face wire. The wire weave is normally "wrong way" which means the crimped wires run axially across the face. The 30 mesh screen provides a more rugged cover than the 40 mesh and the larger openings do not seem to affect strength adversely.

Variables which affect the thickness of the film on the cylinder wire are as follows: (1) The thickness of the film increases as the proportion of asbestos increases - first because without the asbestos the cement and silica would pour through the wire and second because the asbestos reduces the compressibility of the film, thereby leaving voids for the passage of more water.

(2) The thickness increases for an increase in slurry temperature, since slurry viscosity drops rapidly as the temperature rises.

(3) The thickness decreases as the consistency or

viscosity of the slurry increases. For a given blend the consistency increases as the concentration of solids increases. For a given blend and concentration, the consistency increases as the asbestos surface area increases.

(4) The thickness of the film increases with time, but at a decreasing rate. There are two times to consider: First, the time that a given part of the screen is under the slurry while the machine is running - an inverse function of felt speed; second, the time that the machine is stopped, a direct function of mandrel change time.

Although the formation of the film on the mold gives the appearance of being elementary, the precentage, types, and degree of opening of the asbestos fibers charged into the vats is vital to the machine operation. The production rate of the machine may be determined by the rate of film pickup on the molds, but a high production rate is costly unless the fiber strength and opening is balanced with cement and silica properties to produce a sheet which the pipe machine felts, vacuums, and press can sucessfully convert into a sound pipe wall.

In general, as asbestos fiber is progressively opened,

the strength increases, the filterability decreases, the bulk increases (thereby decreasing density), and the water retention increases. As compared to white fiber, the blue asbestos exhibits a more rapid increase in strength but also a much higher water retention increase.

As an aid to the agitators in maintaining uniform vats, an overflow system is in use. The flow over a weir toward the front of the machine flows down a trough to a pump which returns it to the mixing cone at the rear of the machine. A high volume overflow may also aid in aligning fiber for greater hoop strength. Because of the mixing which takes place with the overflow in the cone, water may be allowed to flow into the machine during mandrel changes to replace the water lost from the vats through the molds.

For some random alignment of fibers to increase flexual strength, a rake having long blades immersed in the slurry next to one of the molds is slowly oscillated. There is some question about the rake's effectiveness, but if it does promote flexual strength it should not be used for hydro pipe i.e., 10" or larger pipe, which requires no flexual strength test.

The film width is controlled by applying an adhesive

or other coating to fill the face wire openings outside the desired film width - these coated areas are known as deckles and are 13'-2" apart.

B. Bottom felt and vacuum de-watering boxes
After the bottom felt passes over the first cylinder mold it passes under a vacuum slit box which pulls the stock into the felt and partially dewaters both the felt and the sheet before the second mold. After the second film is picked up, the two-layered sheet is carried back toward the front of the machine with the sheet still on the outside but now on the top instead of the bottom of the felt loop. Sheet and felt are again dewatered while passing over a larger vacuum box pulling from 10 to 16 inches of mercury. The flow of air varies as the square root of the pressure difference across the felt - so that increasing the vacuum 50% only changes the air flow by 22% with other conditions constant.

The moisture remaining in the sheet will vary as follows: The moisture decreases as fiber content increases, as temperature increases, and as the sheet thickness decreases; the moisture increases as a given content of fiber is opened, as cement and silica fineness increase, and as water contact time with the stock increases.

Also, affecting moisture release are the dust content of the fibers, the degree of hydration of the cement, and the design and cleanliness of the felt. There is a limit to what can be accomplished with higher vacuums because as the vacuum increases the accompanying increase in felt tension tends to reduce the felt weave openings.

C. The Press

The roll-up of the sheet on a mandrel is probably the most critical operation in pipe making - for at this point the thin, tender sheet must be compacted into a dense, thick mass to form the pipe wall. High densities and strength require low moisture content after roll-up, and it is the press which must reduce the moisture to an acceptable level. While increasing the press roll loading will squeeze out more water, pressures cannot be increased beyond a point which causes the pipe wall to shift or tear. Once shifting or tearing occurs, the bond between the plies or between fiber and cement is permanently weakened.

The factors limiting pressures are water content of the sheet, sheet thickness, drainage capacity of the felts, the lubricity or slipperiness of the stock, and the uniformity of

pressure across the mandrel.

For a given pressure curve the moisture in the pipe wall will vary as follows: Moisture will decrease as temperature increases, as water contact time decreases, and as sheet thickness decreases; moisture will increase with more opened fibers, with finer grind cement and silica and with faster setting cement.

Blue fiber as compared to white permits the use of higher pressure but retains more water and reduces density.

D. Bottom felt cleaning devices

After leaving the bottom press roll, an inside, high volume shower floods the felt immediately before an inside worm roll. The left and right hand helixes on this roll knead and stretch the width of the felt and at the same time force shower water through the weave to flush out the imbedded stock. Next a face shower is directed 45° into the felt travel direction to wash the loosened stock away. The final shower is inside the felt at a right angle and again drives solids to the lower face. Next a whipper turning against the felt travel strikes the felt with a series of sharp raps to jar away remaining solids - much like the action of a rug beater.

Finally, before reaching the first mold, the felt passes over a fan suction box which pulls out the soiled washing water.

E. Top Felt

The top felt transmits and cushions the press roll forces to the pipe wall. Since the press forces are spread over more pipe area than on the bottom felt, and since the sheet carrying job is reserved to the bottom felt - the physical wear and filling is far less a problem on the top felt. Consequently, cleaning on the top felt is limited to three worm rolls, a single intermittent spray shower, and a single slit vacuum box.

The DC drive speed control permits the operator to set the top felt speed at a ratio greater than one to the bottom felt - this is termed overdrive. By using a slight amount of overdrive the top felt drive carries an increased share of the press power load and is thought to assist in rolling up a tighter pipe.

F. The press hydraulic system

At the present time, the two press rolls are moved up and down by hydraulic cylinders connected to the press roll bearing housings and guided by a pair of four parallelogram

CAPCO KIN 0000542

linkages connected with two torque tubes. In order to compensate for deflection in the center of the rolls, a pair of dolly rolls transmits force from two other cylinders. When a bare mandrel is loaded in the press, a closed center hydraulic valve shifts to move the outboard and dolly roll cylinders down against the press rolls to load the mandrel at a preset pressure. When the proper pressure is reached, the fill valve centers and the pipe machine is started.

During roll-up the hydraulic circuit is isolated from any oil source. The pressure curve is controlled by a cam operated relief valve - which drains excess oil to sump as the cylinder pistons are pushed up by the increasing wall thickness.

Physically the press should impart smooth, uniform, and reproducible pressures across the pipe wall and should permit a rapid mandrel change.

By keeping mandrel change times low the excess build-up of stock on the molds during machine pauses will be minimized. This heavier mold pickup is termed a slug and may be positioned in the pipe wall by varying layer thickness and felt speed.

G. The Calender

At the calendering station, an air lance is inserted

between mandrel and pipe wall to open a gap across the pipe. By subsequent rolling the pipe is loosened around its circumference. Although a pressure roll is sometimes used on small pipe, over-opening may result.

If the mandrel is too smooth, the compressed air cannot easily penetrate across the pipe. Accordingly, the mandrels are periodically sand or shot blasted to leave a textured surface.

Every effort should be made to prevent over-opening, since an increase in pipe diameter weakens the bonds between fiber and cement. Resistance to over-opening increases with lower moisture content and with higher fiber level. The tendency to over-open increases as pipe diameter and wall thickness increase.

III Pipe Curing

A. Pre-cure Oven

The purpose of the pre-cure oven is to harden the pipe enough to permit stripping the mandrel as quickly as possible for return to the pipe machine - thereby reducing mandrel inventory. The hardening can result from cure of the cement or from drying the pipe. Ideally, all the hardening should be derived from curing rather than drying, but in practice

CAPCO KIN 0000544

drying predominates.

When a pipe is rolled up in the press, some air is trapped in its wall, primarily between layers. As the pipe is rapidly heated, this blocked air expands more than the solid phase and causes the pipe to swell. As compaction or density decreases, the swelling increases rapidly and can greatly weaken the pipe.

Wetting the newly rolled up pipe will also result in destructive swelling, but as the pipe is allowed longer curing times before wetting the damage decreases. In fact, after enough strength is obtained to prevent swelling, an increase in strength will result because of the additional water available for hydration.

B. Wet Room

Pipe is placed in the wet room after pre-cure in order to replace moisture lost through drying in the oven. This room is heated and sprinkled by overhead showers, which provides uniform cement hydration regardless of outside temperature and humidity. Regulating the minimum hold time in the wet room assures that pipe will be strong enough to withstand rapid autoclave heating.

CAPCO KIN 0000545

C. Autoclaving

There are two important advantages to an autoclave cure as compared to a normal cure. First, greater strength is reached by autoclaving for a day than by normal curing for a month. This greatly reduces in-process inventory and allows flexibility in scheduling production to meet shipments.

Secondly, autoclaving imparts improved resistance to chemical attack in the ground by sulfate salts, aggressive Co_2, soft waters, and acid. At the high pressure and temperature in the autoclave, calcium hydroxide - a vulnerable hydration product of cement - combines chemically with silica flour to form a stable calcium silicate hydrate called tobermorite.

Properties which are not improved by autoclaving are permeability, brittleness, and stiffness. These undersirable tendencies may be minimized by holding curing temperature at approximately 350°F, by an adequate pre-cure, and by avoiding too rapid an increase or decrease of pressure.

The reactivity of silica increases rapidly as the particle size decreases and the strength falls sharply for particles coarser than 200 mesh (74 microns). For this

CAPCO KIN 0000546

reason silica flour should be 98% passing 200 mesh - which would be equivalent to a 3500-4000 Blaine.

Scientific studies indicate that the maximum strength will be obtained with a 70:30 or 65:35 ratio of cement to silica flour but a slightly higher proportion of silica may be used to reduce uncombined calcium hydroxide or to compensate for too low a water to cement ratio in the pipe wall.

CAPCO KIN 0000547

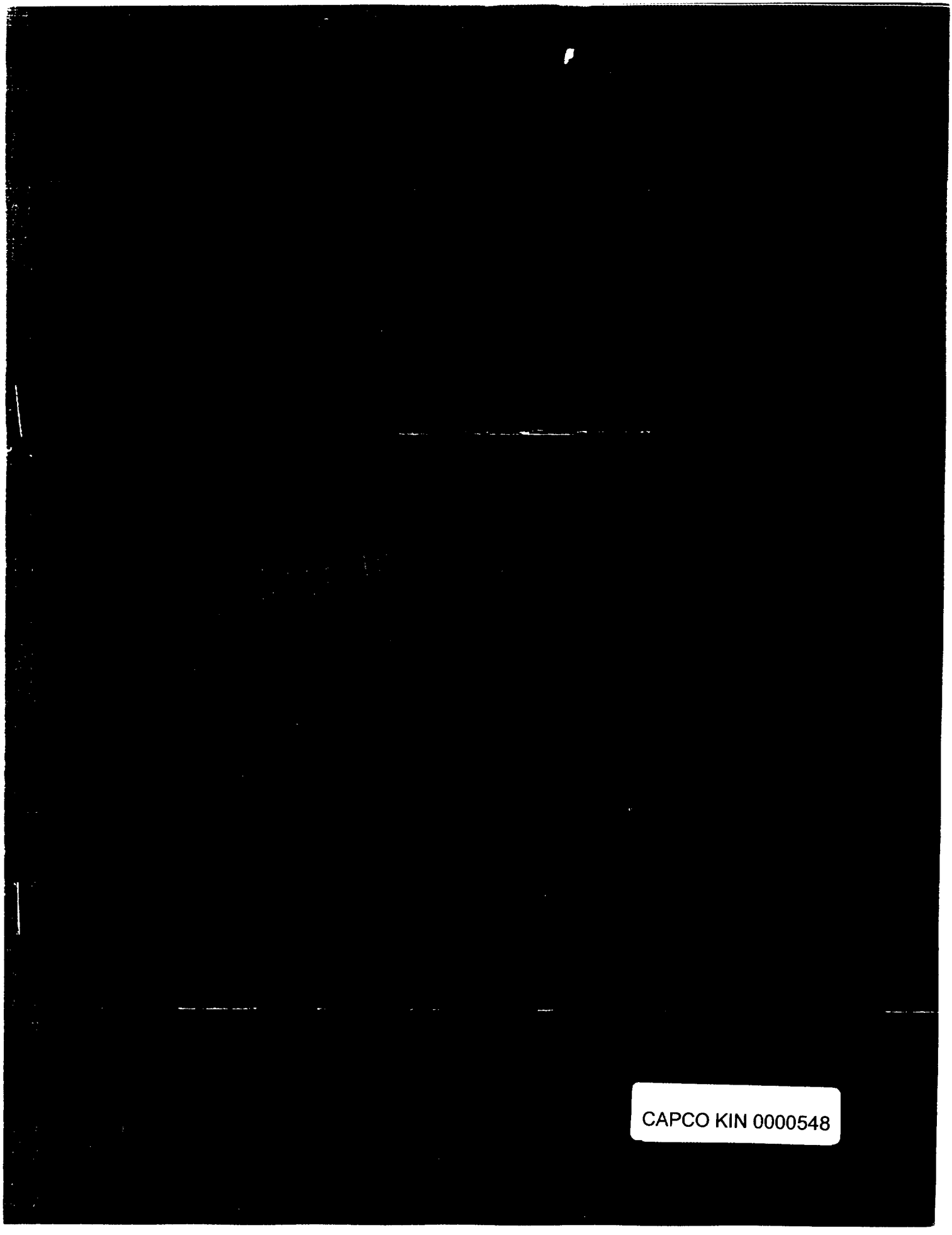

CAPCO KIN 0000548

BARON WHITAKER, PRESIDENT
DONAL BRETING, VICE PRES. - LABEL SERVICE
W. A. FARQUHAR, VICE PRES. - ELECTRICAL
NORMAN H. DAVIS, JR.
ASSISTANT VICE PRESIDENT

FOUNDED 1894

K. S. GEIGES, SENIOR VICE PRESIDENT
E. N. DAVIS, VICE PRES. - FIRE PROTECTION
W. S. AUSTIN, VICE PRES. AND SECRETARY
T. F. RAMSEY, JR., TREASURER

Underwriters' Laboratories, Inc.®
For Service - Not for Profit

SPONSORED BY
American Insurance Association

207 E. OHIO ST CHICAGO, ILL 60611
333 PFINGSTEN ROAD NORTHBROOK, ILL. 60062
1285 WALT WHITMAN ROAD MELVILLE, L. I., N.Y. 11746
1655 SCOTT BLVD SANTA CLARA, CALIF 95050

File Ex2456
Assignment 66K1715

June 17, 1966

REPORT

on

PIPE AND COUPLINGS - ASBESTOS CEMENT

Cement-Asbestos Products Co.
Ragland, Alabama

CAPCO KIN 0000549

D E S C R I P T I O N

PRODUCT COVERED:

Asbestos-cement pressure pipe and couplings in 4 to 12-in. sizes, inclusive, 150-psi pressure class. The pipe is 13 ft in length. Service connections in 3/4-in. size for use with pipe sizes 4 to 10 in., inclusive, 150-psi pressure class.

GENERAL CHARACTER:

The asbestos-cement pressure pipe and couplings covered by this Report are manufactured from a mixture of asbestos fibers, portland cement, and silica flour. A description of the method of fabrication is given in a latter section of this Report.

Construction features of the pipe couplings and ring gaskets are shown by Fig. 1.

The design of the pipe and couplings will permit slight angular deflection at the joints so that a pipeline may be laid in curves of large radii.

USE:

The pipe and couplings covered by this Report are intended for use in underground water service where the working pressure does not exceed that for which it is rated and when installed in accordance with the manufacturer's installation instructions.

MARKING:

Pipe - Each length of pipe is marked as follows:

1. Manufacturer's trade name - "Cement-Asbestos Products Co."
2. Nominal inside diameter, pressure class.
3. Test pressure "T-350 PSI" for Class 100 and "T-525 PSI" for Class 150.

CAPCO KIN 0000550

4. Date and shift of manufacturer.

5. Underwriters' Laboratories, Inc. label reading:

UNDERWRITERS' LABORATORIES, INC.

(R)

LISTED
NONMETALLIC PIPE FOR WATER MAINS

Couplings - Each coupling is stenciled with the following marking.

1. Manufacturer's trade name - "Cement-Asbestos Products Co."

2. Nominal inside diameter, pressure class.

3. Test pressure "T-350 PSI" for Class 100 and "T-525 PSI" for Class 150.

Rubber Sealing Rings - Each ring is marked with the following information molded into it.

1. Ring manufacturer's mark, "(M)."

2. Year of manufacture (may be indicated by a code letter).

3. The size and pressure class for which its use is intended.

TRANSPORTATION AND INSTALLATION OF PIPE:

TRANSPORTATION

Pipe is normally loaded on skids, secured by steel straps, and transported in flat-bodied trucks, or railroad cars.

CAPCO KIN 0000551

UNLOADING

Unloading is by hand or with the aid of ropes. Skids and hoisting equipment are employed for excessive drops and larger sizes.

DISTRIBUTION

After unloading, the pipe is distributed along the trench site, leaving the couplings and rubber rings in a central storage point until used, in such a manner as to protect the rubber from exposure to sun. The pipe and couplings may also be delivered assembled with one gasket in place.

TRENCHING AND LAYING

The trench is dug to allow proper clearances for working space at the sides of the pipe and for coupling clearance under the pipe.

ASSEMBLY OF "PERMAFLEX"

The parts forming the joint are the pipe ends, a coupling, and two rubber sealing rings. Before making the joint, the pipe ends, rubber rings, and interior of the couplings are thoroughly cleaned.

1. The rubber sealing rings are fitted inside the coupling in the gasket recesses. The outside surface of the pipe is lubricated with a hydrogenated vegetable-oil lubricant.

2. The coupling is then placed over the last pipe laid, and pulled on the pipe until stopped by a shoulder on the pipe. In those cases where the pipe is delivered with the coupling and one gasket in place, the other gasket is inserted and the plain end of the next pipe is assembled into the coupling.

CAPCO KIN 0000552

3. The new pipe length to be laid is then brought up so that it is in alignment. The pipe is pulled into the coupling until the shoulder of the pipe comes in contact with the sealing ring. In the larger sizes, it may be necessary to aid the assembly of pipe and couplings by using a steel bar as a lever, pushed into the ground and acting against a wooden block inserted between the steel bar and the pipe or coupling. A jack and chain may also be used. In some instances the pipe can be pushed by hand.

4. After the joint is made, deviations in alignment can be adjusted and slight angular deflections may be made by lifting and moving the end of the last laid pipe.

5. Disassembly can be accomplished by lifting the end of the pipe or moving it from side to side and at the same time pulling the pipe from the coupling.

CAPCO KIN 0000553

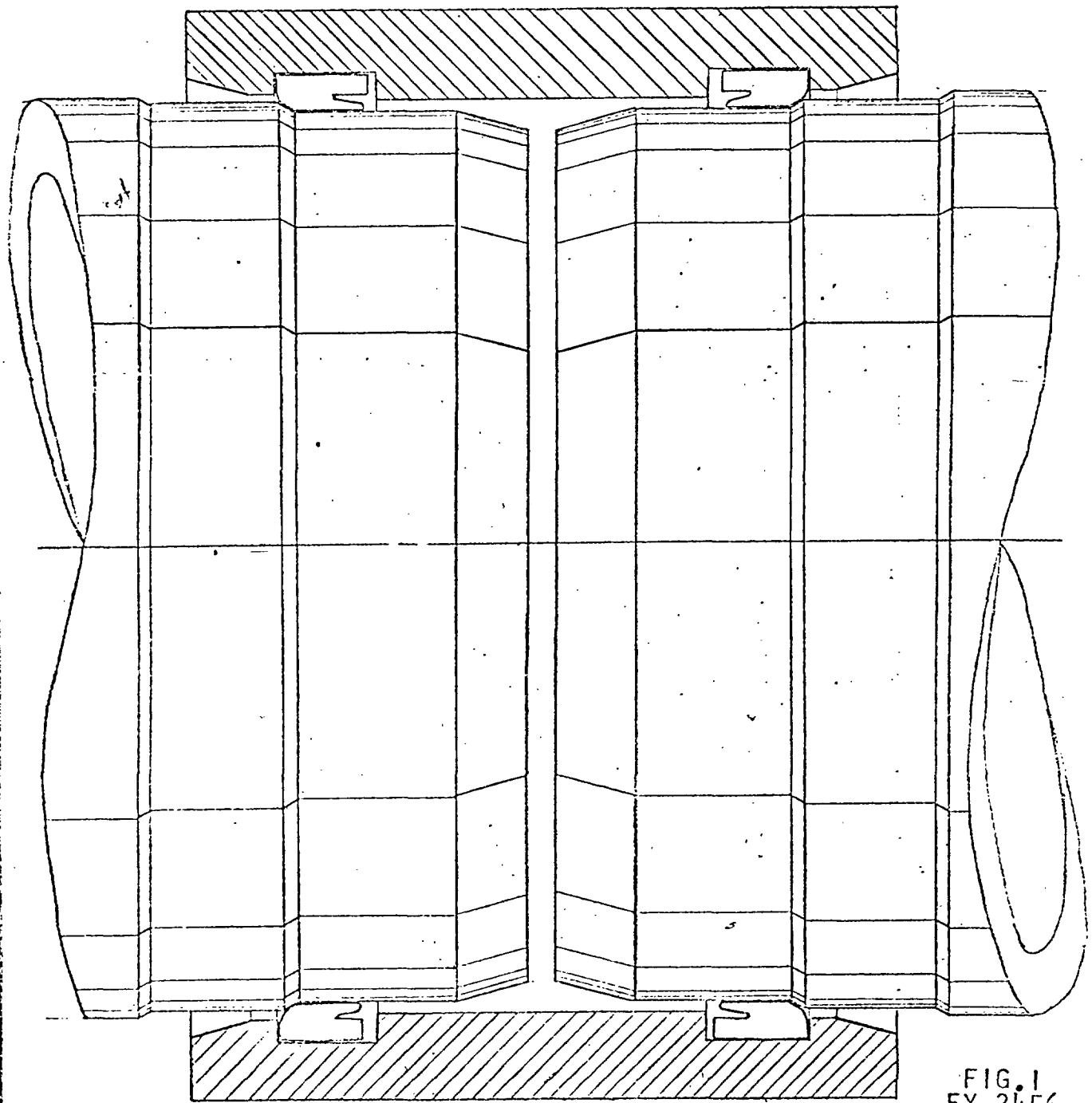

FIG. 1
EX 2456

CEMENT ASBESTOS PRODUCTS CO.
RAGLAND, ALABAMA

CAPCO KIN 0000554

DRAWN:	APPROVED:	SCALE:	DATE:	DWG. NO. A-

EX 2456 FIG. 2

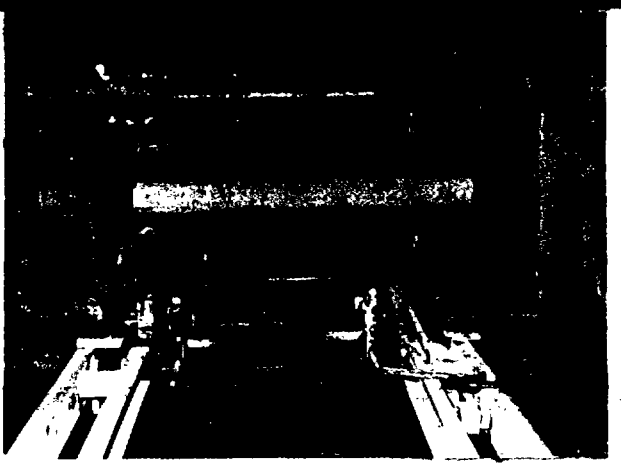

2A.
BURST TEST
SET-UP

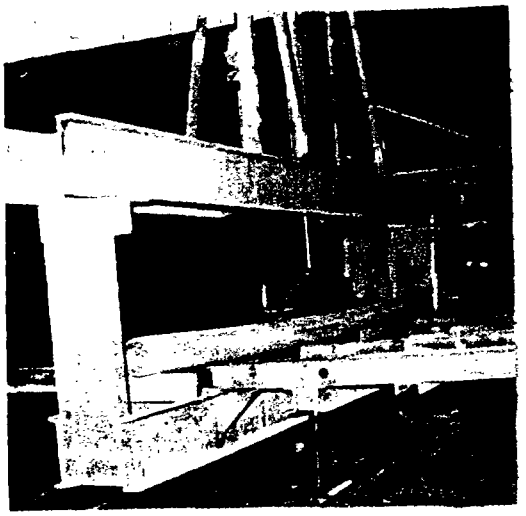

2B. FLEXURE TEST

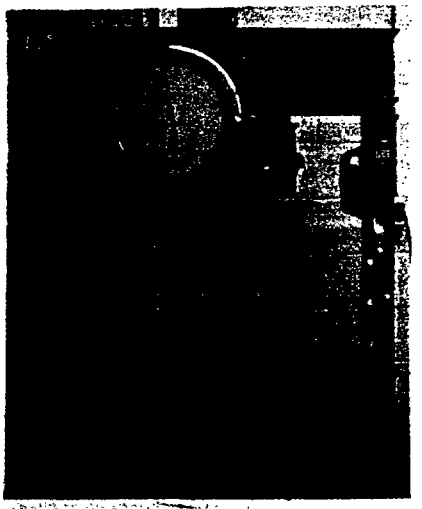

2C. CRUSHING TEST

C66-834

CAPCO KIN 0000555

EX 2456 FIG. 3

RESTRAINED JOINT
TEST LINES





C66-835

T E S T R E C O R D N O. 1

SAMPLES:

Representative production samples of asbestos-cement pipe and couplings in sizes and types covered by this Report were used in the following tests, except as noted.

EXAMINATION OF PIPE AND COUPLINGS:

METHOD

The sample pipe, couplings, and rubber rings were examined to check the dimensions and design features against the manufacturer's drawings and manufacturing tolerances. The production methods and facilities at the manufacturer's plants were reviewed to develop information regarding the uniformity of production and the inspection program followed in production.

RESULTS

The dimensions of the pipe and couplings examined were found to be within the tolerances established by the manufacturer.

The manufacturing procedures followed and the manufacturer's inspection and test program are conducive to the production of uniform pipe and couplings, and the elimination of products not measuring up to the shop standard.

BURSTING TESTS:

METHOD

Individual lengths of pipe were installed in the plant hydrostatic test machines. See Fig. 2A. The assembly was filled with water, vented of air, and subjected to gradually increasing pressures until a value of four times the rated pressure was obtained. This was held for 5 sec, whereupon the pressure was increased until the pipe burst or until the maximum of the apparatus was attained.

RESULTS

The results of these tests are recorded in the following table.

The pressures at which the pipe burst were, in all cases, in excess of requirements.

Pipe Size, In.	Pressure Class	Bursting Pressure, PSI
4	150	980 †
4	150	1000 †
6	150	905
6	150	950
8	150	740
8	150	730
10	150	810
10	150	810
12	150	670
12	150	700

† - These samples did not burst maximum of test apparatus.

Hydrostatic test samples are required to sustain a pressure of at least four times the rated pressure or 5 sec.

FLEXURE TEST:

METHOD

Two full-length samples of the 4, 6, and 8-in. size pipe were placed on "V" block load supports in a tension and compression testing machine and loaded at the third points. See Fig. 2B. Each sample was loaded at a uniform rate until failure occurred. Note was made of the maximum load applied and the character of the failure.

RESULTS

The following table presents the results of these tests in comparison with the minimum flexure load requirements.

Pipe Size, In.	Pipe Length, Ft	Test Span, Ft	Load Span, Ft	Pressure Class	Required Minimum Load, Lb	Load at Failure, Lb
4	13	12	4	150	1000	1330
4	13	12	4	150	1000	1410
6	13	12	4	150	2800	3110
6	13	12	4	150	2800	2990
8	13	12	4	150	5700	6140
8	13	12	4	150	5700	6060

RING CRUSHING TESTS:

SAMPLES

Unmachined samples, 12 in. long, of each size pipe were selected from production stock for these tests.

METHOD

Each ring was placed in a horizontal position between wooden-block bearings in a tension and compression testing machine and loaded to failure. See Fig. 2C. Observations were made to note the maximum load.

RESULTS

The following table presents the results of these tests in comparison with the required minimum crushing load.

Pipe Size, In.	Pressure Class	Required Minimum Load, Lb	Actual Load, Lb
4	150	5400	9720
4	150	5400	9130
6	150	5400	7890
6	150	5400	7300

CAPCO KIN 0000559

(Table Cont'd)

Pipe Size, In.	Pressure Class	Required Minimum Load, Lb	Actual Load, Lb
8	150	5500	9130
8	150	5500	9300
10	150	7000	7030
10	150	7000	7090
12	150	7600	8380
12	150	7600	9350

HYDROSTATIC TESTS OF COUPLINGS:

SAMPLES

Samples of each size of coupling were used in these tests.

METHOD

Samples of each size of coupling were installed in the plant coupling tester and subjected to a hydrostatic proof test of four times the rated pressure for 5 sec, whereupon the pressure was increased to burst the coupling.

RESULTS

The couplings burst at the pressure indicated in the following table.

Pipe Size, In.	Pressure Class	Bursting Pressure, PSI
4	150	900
4	150	930
6	150	900
6	150	900
8	150	790
8	150	870
10	150	820
10	150	770
12	150	730
12	150	630

CAPCO KIN 0000560

SERVICE CONNECTION (CORPORATION STOP) TESTS:

At least two full-length samples each of pipe sizes 4 to 10 in., inclusive, in the 150-psi pressure class, were used. Three-quarter-inch service connections were also used.

METHOD

Each pipe sample was cut in two, one-half placed aside as a control sample and the other half was drilled and tapped for attachment of a 3/4-in. service connection. The service connection was attached following the manufacturer's installation instructions. Each sample including the control samples, was subjected to a pressure of four times the rated pressure for 5 sec. The pressure was then increased until the pipe burst.

RESULTS

The results of this test are recorded in the following table:

Pipe Size, In.	Sample	Maximum Pressure, PSI	Remarks
4	A, control	900	Pipe burst
4	A, with connection	620	Pipe cracked across stop
4	B, control	950	Maximum of apparatus
4	B, with connection	890	Pipe cracked across stop
4	C, control	970	Maximum of apparatus
4	C, with connection	770	Pipe cracked across stop
6	A, control	1000	Maximum of apparatus
6	A, with connection	630	Pipe cracked across stop
6	B, control	950	Maximum of apparatus
6	B, with connection	770	Pipe cracked across stop
6	C, control	950	Maximum of apparatus
6	C, with connection	750	Pipe cracked across stop

CAPCO KIN 0000561

(Table Cont'd)

Pipe Size, In.	Sample	Maximum Pressure, PSI	Remarks
8	A, control	750	Pipe burst at end connection
8	A, with connection	700	Pipe cracked across stop
8	B, control	700	Pipe cracked at end
8	B, with connection	655	Pipe cracked across stop
10	A, control	730	Pipe burst
10	A, with connection	675	Pipe cracked across stop
10	B, control	620	Pipe burst
10	B, with connection	600	Burst at 6 sec
10	C, control	610	Pipe burst
10	C, with connection	610	Pipe cracked across stop

ASSEMBLY AND DISASSEMBLY TESTS:

SAMPLES

Samples of the 8-in. Class 150 and 12-in. Class 150 pipe and couplings specially machined to the minimum coupling and maximum pipe dimensions permitted by the manufacturer's tolerances were used in these tests.

METHOD

The spigot ends of the pipe were given a coating of lubricant and the couplings were provided with the sealing ring and spacer gaskets. After the pipe and couplings were aligned, the assembly was made, following the manufacturer's installation instructions.

RESULTS

The assembly of two lengths of pipe and one coupling was accomplished with reasonable ease in all sizes. Disassembly of the pipe was also accomplished without undue difficulty. Examination of the disassembled samples showed no damage to the pipe, coupling, or gaskets.

CAPCO KIN 0000562

RESTRAINED JOINT TESTS:

SAMPLES

Full-length samples of the 8-in. Class 150, and 12-in. Class 150 pipe with couplings of like sizes and classes were used in these tests. Some of the pipes were machined to the minimum dimensions permitted by the manufacturer's tolerances, while some of the couplings were machined to the maximum dimensions, and these were used to form the joints.

METHOD

Test lines of the pipe and couplings, together with rubber-ring gaskets consisting of four joints and five lengths of pipe were assembled in accordance with the manufacturer's installation instructions. The joints were deflected as shown in the test record. The pipeline was filled with water, vented of air, and subjected to increasing pressures in 50-psi increments up to twice the maximum rated pressure. Each increment of pressure was maintained until the Laboratories engineer was satisfied as to the equilibrium of the joint. Each test line was cycled twice in this manner from 0 to 300 psi to 0. Following this, the pressure was increased until failure occurred. The test assembly is shown by Figs. 3A and 3B.

RESULTS

In the tests with the assembled line of pipe and couplings, no leakage occurred at a pressure of twice the rated pressure of the test line. Specific test data are shown in the following table.

Pipe Size, In.	Pressure Class	Maximum Joint Deflection, Deg	Maximum Pressure, PSI	Remarks
8	150	5.42	550	End cap leaked at maximum pressure
12	150	5.33	390	End pipe began moving and fourth coupling broke

CAPCO KIN 0000563

PHYSICAL TESTS OF SEALING RINGS:

METHOD

Representative samples of the gaskets were subjected to an accelerated oxygen pressure aging test for 96 hr in an oxygen bomb having a temperature of 70 C with oxygen at a pressure of 300 psi. The tensile strength and elongation of the samples were determined before and after the aging period. The hardness was measured before aging with a Shore-Type A durometer hardness gauge which has a scale graduated from 0 to 100.

Two-inch gauge marks were stretched to 6 in., held for 2 min, then released and measured 2 min later.

RESULTS

	Before Aging	After Aging	Per Cent of Original
Average Tensile Strength, PSI	2594	2031	78
Average Elongation, Per Cent	455	355	78
Hardness			
Sample recovered to 2.10 in.	55	-	-

FACTORY METHODS:

The factory of Cement-Asbestos Products Co. was visited by a representative of Underwriters' Laboratories, Inc. for the purpose of obtaining general information regarding the manufacture of asbestos-cement pipe and couplings covered by this Report and detailed information relative to the features of factory equipment and inspection that have a bearing on the quality of materials employed, character of the workmanship, the uniformity of the finished product, and practicability of handling and shipping the pipe and couplings. The following information covers briefly the manufacture of asbestos-cement pressure pipe and couplings.

Manufacturing Process - These asbestos-cement pipe and couplings are manufactured by the Mazza Process from an initimate mixture of asbestos fiber, portland cement, and silica flour.

A mixture of asbestos fiber, cement, silica flour, and water is conveyed to a vat provided with a hollow rotating cylinder, sheathed with a fine-metal gauze. A thin uniform layer of the mixture adheres to the sheath, and is transferred to an endless belt of felt equipped with two suction chambers to draw off excess water. The film of asbestos cement, approximately 0.005 in. thick then passes over a polished-steel mandrel onto which the required thickness is built up. While winding the pipe, a pressure is exerted on the mandrel to insure a homogenous compact product. Coupling stock is made in the same manner as the pipe, but is built up to a greater thickness for a given size.

After forming to the required size, the mandrel is immediately removed and the pipe is passed through a precured oven of steam for approximately 1-1/2 hr. The mandrel is then removed and the pipe is stored for at least 8 hr in a moist atmosphere. The pipe is then given a final cure by autoclave with steam at 115 psi for 16 hr.

After curing, the pipe is cut to the proper length and the ends machined to accommodate the couplings. Coupling stock is cut and machined to proper dimensions before autoclaving.

Each finished pipe and coupling is subjected to a hydrostatic test of three and one-half times rated pressure and each pipe in the 4, 6, and 8-in. size is given a flexural test at the proof test loads specified in the Laboratories' requirements. Automatic recorders on the pipe and coupling hydrostatic testers and on the pipe flexural tester record each test for review by quality-control personnel.

MRS

CAPCO KIN 0000565

C O N C L U S I O N S

The following conclusions apply to the pipe and couplings covered by this Report when used in public and private waterwork systems and connections to such systems, for the rated working pressures of the pipe and couplings (150 psi).

PRACTICABILITY:

The pipe and couplings can be properly handled and installed under conditions ordinarily met in service by those reasonably familiar with the installation of asbestos-cement pipe.

STRENGTH:

The pipe, couplings, and service connections covered by this Report, when installed according to the methods advocated, are capable of withstanding the working pressures for which they are designed and the stresses to which they are likely to be subjected in service.

These pipe and couplings meet the strength requirements, as evidenced by the results of the bursting test, ring crushing tests, restrained joint test, and flexural tests. The service connection features meet the strength requirements as evidenced by the results of the service connection tests.

UNIFORMITY:

The facilities and methods employed in the manufacture of the pipe and couplings covered by this Report are such as to insure an accurate and uniform product.

Examination of the pipe and couplings show that a high degree of uniformity is maintained in the manufacture of this product. The manufacturer maintains a rigid inspection program to insure uniformity of the product within established manufacturing procedures.

CAPCO KIN 0000566

CONFORMITY:

The pipe and couplings covered by this Report are in conformance with the requirements of the Laboratories' Outline of Proposed Investigation for Asbestos-Cement Water Pipe and Couplings (Subject 107).

FOLLOW-UP SERVICE:

The asbestos-cement pipe and couplings covered by this Report will be placed under the Label Service.

Report by:

Miles R. Suchomel

MILES R. SUCHOMEL
Project Engineer
Fire Protection Department

Reviewed by:

S. E. Auck

S. E. AUCK
Associate Managing Engineer
Fire Protection Department

MRS:pe

CAPCO KIN 0000567

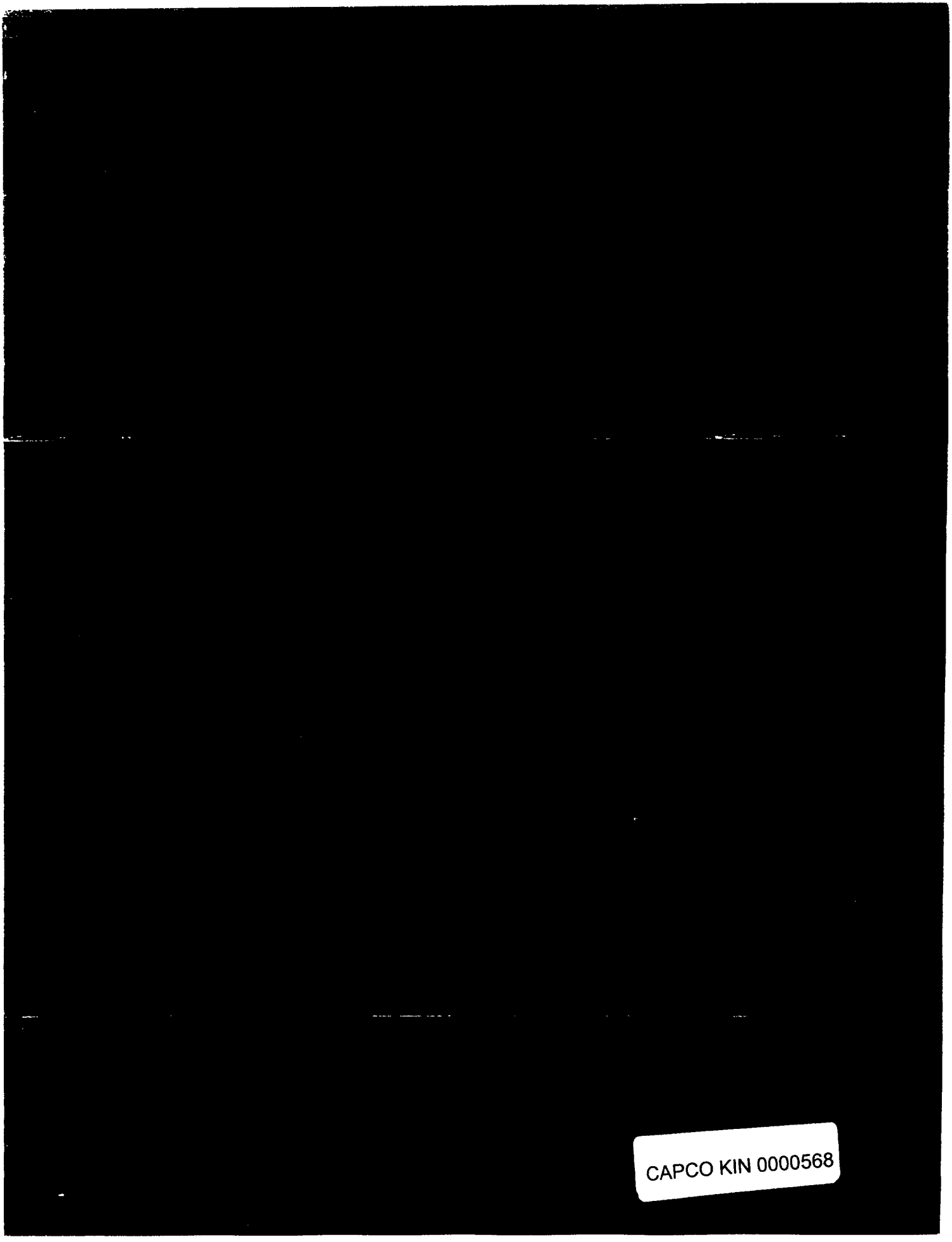
CAPCO KIN 0000568

UNDERWRITERS' LABORATORIES, INC.
CHICAGO · NORTHBROOK, ILL. · MELVILLE, N.Y. · SANTA CLARA, CALIF.

an independent, not-for-profit organization testing for public safety

File Ex[illegible]56
Assignment [illegible]K328A

December 2, 1968

REPORT

on

ASBESTOS-CEMENT PIPE AND COUPLINGS

Cement-Asbestos Products Co.
Ragland, Alabama

D E S C R I P T I O N

PRODUCT COVERED:

Asbestos-cement pressure pipe and couplings in 4-14 in. sizes, pressure Class 200 and 14 and 16 in. sizes, pressure Class 150. The pipe is 13 ft in length.

GENERAL CHARACTER:

The asbestos-cement pressure pipe and couplings covered by this Report are manufactured from a mixture of asbestos fibers, portland cement, and silica flour.

The design of the pipe and couplings will permit slight angular deflection at the joints so that a pipe line may be laid in curves of large radii.

USE:

The pipe and couplings covered by this Report are intended for use in underground water service where the working pressure does not exceed that for which it is rated and when installed in accordance with the manufacturer's installation instructions.

MARKING:

Pipe - Each length of pipe is marked as follows:

1. Manufacturer's trade name - "Cement-Asbestos Products Co."
2. Nominal inside diameter, pressure class.
3. Test pressure "T-700 PSI" for Class 200 and "T-525 PSI" for Class 150.
4. Date and shift of manufacture.
5. Underwriters' Laboratories, Inc. label reading:

UNDERWRITERS' LABORATORIES, INC.

Ⓡ

LISTED
NONMETALLIC PIPE FOR WATER MAINS

Couplings - Each coupling is stenciled with the following marking.

1. Manufacturer's trade name - "Cement-Asbestos Products Co."

2. Nominal inside diameter, pressure class.

3. Test pressure "T-700 PSI" for Class 200 and "T-525 PSI" for Class 150.

TEST RECORD NO. 1

SAMPLES:

Representative production samples of asbestos-cement pipe and couplings in sizes and types covered by this Report were used in the following tests, except where noted.

EXAMINATION OF PIPE AND COUPLINGS:

METHOD

The sample pipe, couplings, and rubber rings were examined to check the dimensions and design features against the manufacturer's drawings and manufacturing tolerances. The production methods and facilities at the manufacturer's plants were reviewed to develop information regarding the uniformity of production and the inspection program followed in production.

RESULTS

The dimensions of the pipe and couplings examined were found to be within the tolerances established by the manufacturer.

The manufacturing procedures followed and the manufacturer's inspection and test program are conducive to the production of uniform pipe and couplings, and the elimination of products not measuring up to the shop standard.

HYDROSTATIC TESTS OF PIPE AND COUPLINGS:

METHOD

Individual lengths of pipe and coupling were installed in a hydrostatic test machine. The assembly was filled with water, vented of air, and subjected to a gradually increasing pressure up to a value of four times the rated pressure (600 psi for Class 150 and/or 800 psi for Class 200). This pressure was maintained for 5 sec, whereupon it was increased until either failure occurred or the capacity of the test apparatus was reached.

RESULTS

The results of these tests are recorded in the following tabulations:

CAPCO KIN 0000572

HYDROSTATIC TEST RESULTS

Size, In.	Pressure Class	Pressure At Burst Or Maximum Pressure PSI Pipe	Coupling	Required Pressure PSI Pipe	Coupling
4	200	930	1000 †	800	800
4	200	1000	1000 †	800	800
6	200	1000 †	1000 †	824	800
6	200	1000 †	1000 †	840	800
8	200	1000	960	800	839
8	200	910	860	800	784
10	200	940	960 †	838	800
10	200	875	1060 †	874	800
12	200	875	960 †	833	859
12	200	840 †	1010 †	773	801
14	150	725	600	635	600
14	150	650	600	629	600
16	150	640	960 †	600	600
16	150	665	960 †	600	647

† - No burst limit of apparatus.

FLEXURE TESTS:

METHOD

Two full lengths of the 4, 6 and 8 in. sizes, were placed on supports 12 ft apart. The load was applied by the manufacturer's production testing machine at a uniform rate at the third points, 4 ft apart and located 4 ft from the lower supports. Each sample was loaded in this manner until failure occurred and note was made of the maximum load applied and the character of the failure.

RESULTS

The following table presents the results of these tests in comparison with the minimum flexure-load requirement for a 12 ft span.

CAPCO KIN 0000573

FLEXURE TEST RESULTS

Pipe Size In.	Pressure Class	Minimum Required Load, Lb	Maximum Load Obtained Lb
4	200	1400	1410
4	200	1400	1410
6	200	3700	3700
6	200	3700	3700
8	200	7600	7640
8	200	7600	7600

RING CRUSHING TESTS:

SAMPLES

The 12 in. samples were cut from each size pipe used in these tests.

METHOD

Each ring was placed on two lower bearings consisting of two straight wooden strips having their interior top edges rounded to a radius of approximately 1/2 in. Load was applied by an upper bearing of a straight wood block. The load was applied until failure occurred and note was made of the maximum load at failure.

RESULTS

The following table presents the results of these tests in comparison with the minimum required crushing load.

Pipe Size In.	Pressure Class	Minimum Required Load, Lb	Maximum Load Obtained Lb
4	200	8700	9220
4	200	8700	10800
6	200	9000	12950
6	200	9000	12950
8	200	9300	11590
8	200	9300	12750
10	200	11000	12850
10	200	11000	13350
12	200	11800	15950
12	200	11800	16150

CAPCO KIN 0000574

(Table Cont'd)

Pipe Size In.	Pressure Class	Minimum Required Load, Lb	Maximum Load Obtained Lb
14	200	13500	15900
14	200	13500	15700
16	200	15400	18860
16	200	15400	18700
14	150	8600	9430
14	150	8600	11400
16	150	9200	11590
16	150	9200	11690

ASSEMBLY AND DISASSEMBLY TESTS:

SAMPLES

Samples of the 16 in. Class 200 pipe and couplings specially machined to the minimum coupling and maximum pipe dimensions permitted by the manufacturer's tolerances were used in these tests.

METHOD

The spigot ends of the pipe were given a coating of lubricant and the couplings were provided with the sealing ring and spacer gaskets. After the pipe and couplings were aligned, the assembly was made, following the manufacturer's installation instructions.

RESULTS

The assembly of two lengths of pipe and one coupling was accomplished with reasonable ease in all sizes. Disassembly of the pipe was also accomplished without undue difficulty. Examination of the disassembled samples showed no damage to the pipe, coupling, or gaskets.

CAPCO KIN 0000575

RESTRAINED JOINT TESTS:

SAMPLES

Full length samples of the 12 in. Class 200, and 16 in. Class 150, and 16 in. Class 200 pipe with couplings of like sizes and classes were used in these tests. Some of the pipes were machined to the minimum dimensions permitted by the manufacturer's tolerances, while some of the couplings were machined to the maximum dimensions, and these were used to form the joints.

METHOD

The pipe and couplings, together with rubber ring gaskets were assembled in accordance with the manufacturer's installation instructions. Some of the joints were deflected as shown in the test record. The pipeline was filled with water, vented of air, and subjected to increasing pressure. Each increment of pressure was maintained until the Laboratories engineer was satisfied as to the equilibrium of the joint. Each test line was cycled three times in this manner from 0 to twice the rated pressure to 0. Following this, the pressure was increased until failure occurred. Four separate tests were conducted on the 16 in. Class 200 pipe and couplings.

RESULTS

In the tests with the assembled line of pipe and couplings, no leakage occurred at a pressure of twice the rated pressure of the test line. Specific test data are shown in the following table.

Pipe Size In.	Pressure Class	Maximum Joint Deflection Deg	Maximum Pressure, PSI	Remarks
12	200	5	600	No failure - no leaks
16	150	0	450	No failure - no leaks
16	200	4	450	Chain holding pipe broke
16	200	0	600	No failure - no leaks (three separate tests)

WAW

C O N C L U S I O N

The product covered by this Report has been found to comply with the requirements covering the class and is judged to be acceptable for listing under the Label Service of Underwriters' Laboratories, Inc.

Report by:

W. A. Webb

W. A. WEBB
Project Engineer, Fire
Protection Department

WAW:JA

Reviewed by:

Miles R. Suchomel

MILES R. SUCHOMEL
Senior Project Engineer
Fire Protection Department

CAPCO KIN 0000577

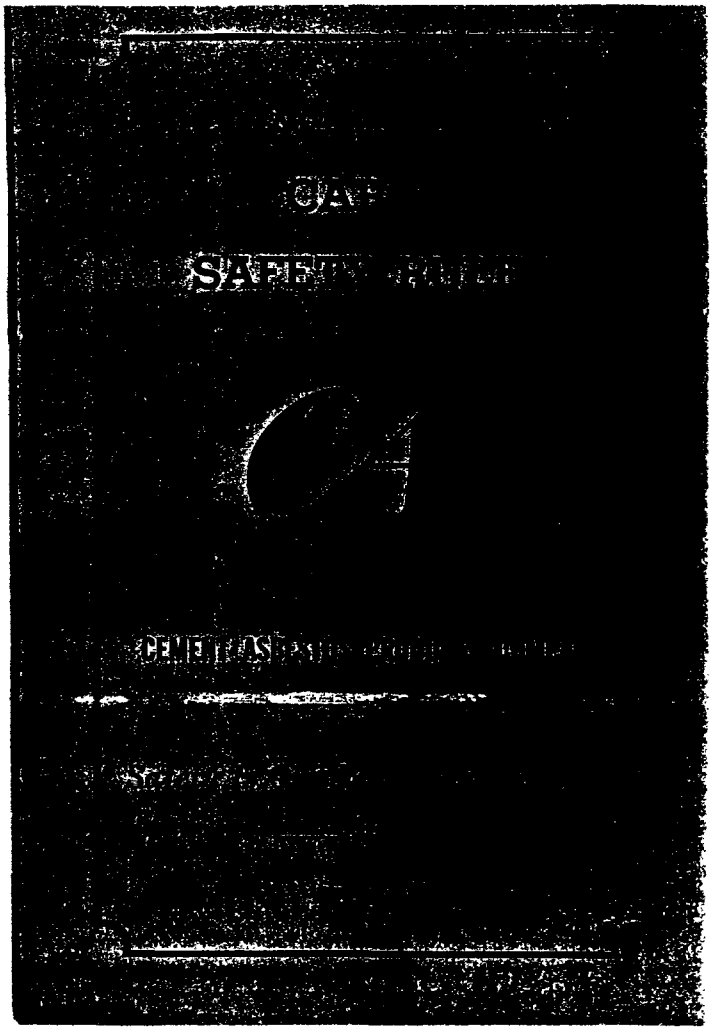

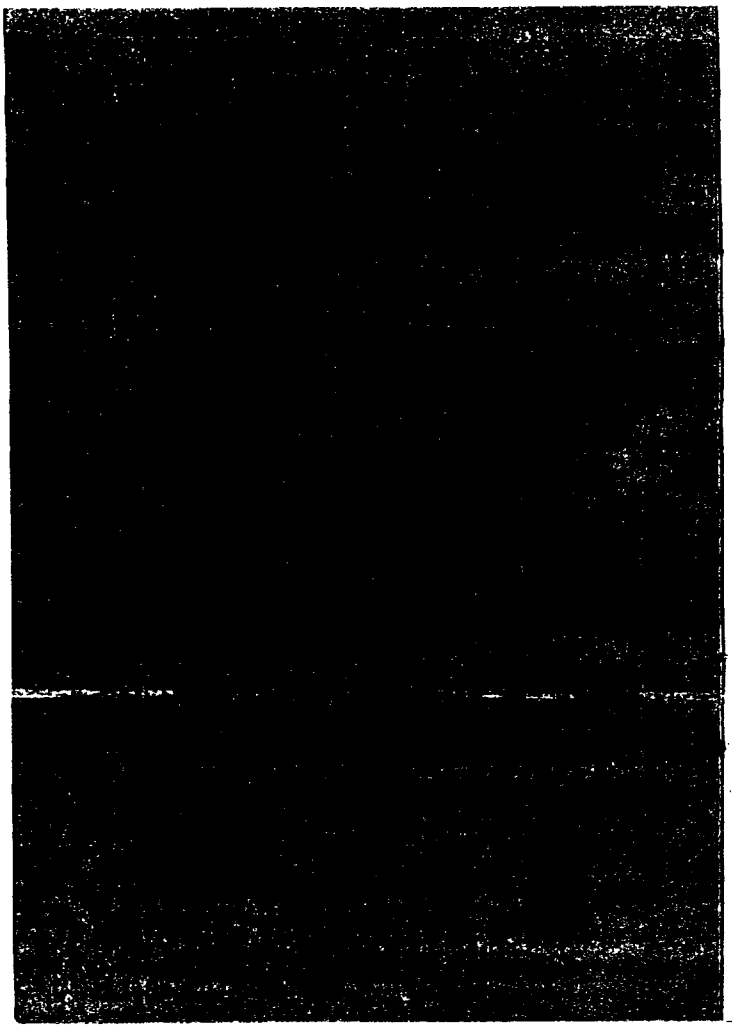

No._____

CAPCO
SAFETY RULES

CEMENT ASBESTOS PRODUCTS COMPANY

Safety Is Our First Consideration

August 1, 1965

CAPCO KIN 0000579

Every Good

SAFETY RECORD

is a

CHALLENGE

for a

BETTER ONE

PREFACE

These rules are made primarily for the purpose of promoting the safety of the employees of the Cement Asbestos Products Company, and the Company expects each and every employee not only to observe and obey the rules himself but to do all in his power to prevent their violation by others, as the carelessness of one employee is very apt to result in injury not only to himself but to others as well.

A violation of any of the rules will subject the offender to disciplinary action. The method of discipline will be left to the local management. Every violation, no matter how slight, should be noted and steps taken to prevent a repetition.

Every employee in and around the plant is urgently requested to report any dangerous condition which he may see to the foreman.

CEMENT ASBESTOS PRODUCTS COMPANY

CEMENT ASBESTOS PRODUCTS COMPANY

PLANT SAFETY RULES

August 1, 1965

The Safety Rules in this book apply to all employees in and around the plant and copies of these rules may be obtained from the superintendent's office.

The following rules and regulations are printed for your benefit, see that you obey them, and take necessary steps to see that your fellow workmen know and are obeying these rules.

To know the rules of the department reflects your interest in your work, and to comply with the rules means you are an asset to the company.

Never take anything for granted, it is your duty to see conditions for yourself. Your own safety and that of your fellow workmen will be endangered by guess work.

Your pride should make your work look neat; your interest in safety should make a safe job.

Strict compliance with the rules of this book shall be the first duty of each employee at all times.

Vigilance and watchfulness promote safety. To avoid danger, adopt the safe course. Employees must not trust to the care exercised by another when their own safety is involved.

GENERAL RULES

1. Each employee shall know all the special rules covering his work, all the general rules, and should always report to the foreman any unsafe condition or practice he thinks may cause accidents.

2. If in doubt as to the meaning of any rules, an employee shall apply to his foreman for explanation.

3. Employees are forbidden to take short cuts over dangerous places. You must not leave your work to go

CAPCO KIN 0000581

to other parts of the plant except upon Company business.

4. Do not ride on any burden being carried by a crane.

5. No one is allowed to operate any machinery, unless duly authorized by the proper authority.

6. All gears, sprockets, saws, belts, etc., and all projections on revolving shafts, such as set screws, keys, couplings, bolts, oil cups, etc., shall be properly guarded. Any employee removing any guard or safety device from any mechanical equipment for any reason shall see that such guard or safety device is replaced, before the machine is put in operation.

7. Never work on any electrically driven machinery until the control switch has first been locked in the off position and the operator notified.

8. Do not turn on any electricity, gas, steam, air or water, or set in motion any machinery, or throw down any material without first seeing if any one is in position to be injured.

9. All persons not authorized by the Electrician are forbidden to work upon any electrical apparatus. You are warned against touching wires of any kind, as it may result in death. Before doing any work where there is danger of coming in contact with electric wires, notify the Electrician, who will advise concerning the work. Do not try to fix electric lights, but call your foreman or electrician.

10. Hand tools must be kept in good condition, mushroomed heads, or other dangerous conditions of drills, hammers, cutters, and other tools will not be permitted.

11. All work must be done in a neat and orderly manner. No repair or construction job will be considered complete until all refuse and excess material has been stored in its proper place.

12. No employee shall bring upon the plant property, or in or around any building thereon, any dangerous weapons, intoxicating liquor, or possession of illegal goods of any kind.

13. Injuries, including those of a minor nature, must be reported to your foreman before the shift is completed.

14. Wrestling, throwing of material, or "horseplay" of any kind, is positively prohibited. Fighting in, or around the plant property and buildings thereon is strictly prohibited.

15. Be ever watchful of loads carried by cranes or suspended in the air, and keep out from under them.

16. Removing or replacing electric light bulb or socket with the current on is prohibited.

17. Do not play with compressed air, never blow the air on anyone. It may enter the body and injure or cause death. The working on air lines while the pressure is on is prohibited.

18. It shall be a violation of the rules to sleep while on duty in or about the plant.

19. Goggles shall be worn when grinding, cutting, welding, or striking where particles may fly, including employees exposed to possible eye injury as a result of work being performed by other employes.

20. Oiling, greasing of machinery, or cleaning of belts or conveyors while in motion is not permitted, except where protection is provided against moving parts.

21. Loose clothing must not be worn by employees who are required to work around moving machinery.

22. Empty soft drink bottles must be placed in racks provided. Lunch papers, paper cups, etc., must be placed in trash cans.

23. When products are being loaded or unloaded from railway cars, workmen shall see to it that car brakes are properly setup and car or cars well secured to prevent movement.

24. Respirators and goggles must be worn by each

CAPCO KIN 0000582

employee when the particular circumstances make either of them needed.

25. Additional protective apparel or equipment required for the personal protection of any employee exposed to a special hazard by reason of a special occupation or work shall be worn or used by the employee subjected to such hazard.

26. Oil and grease kept in the plant shall be in substantial covered metal containers.

27. Employees shall use care in placing ladders before using them. If there is danger of the ladder slipping, have someone hold it. Do not use an unsafe or make-shift ladder.

28. Do not go up or down a ladder without the free use of both hands. If material is to be handled, use a rope. Do not reach more than an arms length from ladder.

29. All scaffolds, whether swinging or otherwise, when higher than six (6) feet above the ground shall be provided with railings of substantial strength. Floor boards of scaffold must be fastened to prevent slipping.

30. Employees removing the cover from any opening in the floor, ground, valve pit, or sewer, must take steps to guard that opening so no one will fall into it.

31. Any employee reporting to work under the influence of intoxicating liquor will be discharged.

32. Employees performing work under elevated equipment or machinery, etc., must have the same securely blocked in addition to lifting jacks, hydraulic systems, chain blocks, etc.

33. Employees are forbidden to run on the job except to protect himself or others from personal injury.

34. Riding on the running boards or on the outside of fork trucks is prohibited.

35. Employees shall use a brush to clean metal shavings from drill presses and lathes and the cement asbestos shavings from machines and machine tools.

36. Supplies and material should be stored in bins and racks in such a manner that it will not obstruct aisleways.

37. Storing of supplies and material in walkways, aisleways, and on stairs is prohibited.

38. Work benches and the front of work benches shall be kept free of excess material and oils.

39. When there is any doubt as to the best and safest method of doing work, and when instructions are not complete or thoroughly understood, the foreman must be consulted and his direction followed.

LATHE OPERATORS

A lathe is not an especially dangerous machine, but it must be intelligently operated if accidents are to be prevented.

1. Wear eye protection, guard against flying chips.
2. Do not hand brake the machine.
3. Do not caliper or gauge the job while machine is in motion.
4. Do not leave chuck wrench in chuck.
5. Do not wear loose clothing.
6. Do not leave machine running unattended.
7. Use a hooked rod for handling chips.
8. Use file with protected tang.
9. Use stick to hold emery cloth against work.
10. Keep the work area clean around the machine.

GRINDING WHEELS

1. When grinding, eye protection must be used in addition to eye shield mounted on grinder.
2. Work rest must be adjusted to within ⅛" of wheel.
3. Do not grind on side of wheel.
4. Do not use gloves when grinding small work.
5. Report grinder defects to your foreman.

CAPCO KIN 0000583

DRILL PRESS

1. Be sure the work is securely clamped.
2. Wear eye protection if work is throwing off chips.
3. Do not wear loose clothing that could be caught in revolving parts.
4. Keep the work area clean and clear of stumbling hazards.
5. Do not leave machine running unattended.
6. Report any machine defects to your foreman.

TOOLS

Because of the widespread use of hand and power tools and the severity of many tool injuries, it is important that control of tool accidents be made a part of every safety program.

1. Workmen are expected to select the right tool for the job.
2. Tools must be kept in good condition.
3. Tools must be used in the right way.
4. Tools must be kept in a safe place.
5. Do not use a wrench for a hammer, pliers for a wrench.
6. Do not use tools with split or broken handles or mushroomed chisels.
7. Do not carry tools or lay tools down where they may fall on someone.
8. Report defective tools to your foreman.

ELECTRIC WELDING

1. Be sure the work setup is such that the work is grounded. Exercise care or the welder or operator can easily become grounded.
2. Do not dip hot electrodes in water.
3. Never change electrodes with bare hands or wet gloves, or when standing on wet floors or grounded surfaces.

4. Report any defects in the welding equipment to your foreman.
5. Welding cables and cutting hose must be neatly stored with machines when not in use.

BURNING AND CUTTING

1. Shut off gas at the pressure-reducing regulators before changing torches, do not crimp hose.
2. If welding or cutting is stopped for sometime (lunch or overnight) close oxygen and acetylene cylinder valves, then open torch valves to relieve gas pressure from hose and regulator.
3. Do not use matches to light torches.
4. Point torch away from others when lighting.
5. Never put torch down until the gases have been completely shut off.
6. Do not hang lighted torch over regulators.
7. When burning or cutting in an area containing combustible or flammable material, fire extinguishers or their equivalent must be readily available.
8. Keep hose wound around regulators or cart when not in use. Protect hose when in use from falling sparks.

OXYGEN AND ACETYLENE

1. Oxygen and acetylene cylinders should be kept in an upright position and secured against accidently being knocked over. Empties must be returned to storage area and replaced with full one.
2. Never use oil or grease as a lubricant on valves or attachments of oxygen cylinders. Keep oxygen cylinders and fittings away from oil and grease, and do not handle such cylinders or apparatus with oily hands, gloves, or clothing.
3. Never use oxygen as a substitute for compressed air in pneumatic tools, in oil preheated burners, to start internal combustion engines, or to blow

CAPCO KIN 0000584

out fuel lines. Oxygen under presseure will explode when in contact with oils or grease.

POWER TRUCKS AND FORK LIFTS

1. Operators must give proper signal when turning.
2. Slow down at intersections and doorways.
3. Look in direction of travel and obey all signs.
4. Do not travel with load too high.
5. Report defective equipment to your foreman.
6. Do not ride on fork trucks. No one but the operator is permitted to ride.
7. Do not run over loose material on floor such as cables, hose, boards, and other obstacles.

We believe we should all be proud of our plant, and we think most of us are. The management wants the plant kept neat and clean and orderly, as attractive and comfortable a place to work in as possible.

Management cannot do the entire job. Unless we all help, we're up against a tough proposition. Sure, the other fellow can do his best, but if we fail to do our part, the job will not be done.

Let's each one of us keep our own job in order, thus maintaining a clean safe plant and safeguarding our future.

No._____

I hereby acknowledge receipt of a copy of the Cement Asbestos Products Company Safety Rules for CAPCO Plant.

As a condition of my employment, I agree to study and learn these rules and to abide by all of them. To be careful to protect myself and fellow workmen from injury.

Name _____

Badge No._____

Occupation _____

Witness _____

Date_____, 19____

CAPCO KIN 0000585

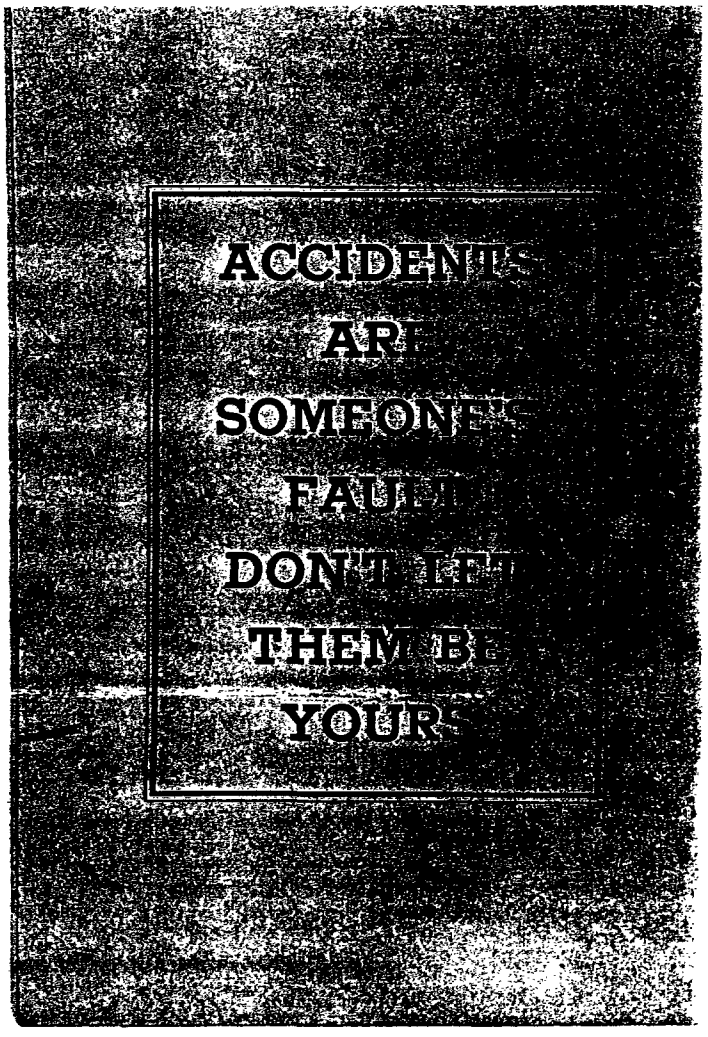
ACCIDENTS
ARE
SOMEONE'S
FAULT
DON'T LET
THEM BE
YOURS