PLAINTIFF'S EXHIBIT
RS-353

1997 Addenda

Date of Issue: December 31, 1997

ASME BOILER AND PRESSURE VESSEL CODE

An Internationally Recognized Code

SECTION IV
Heating Boilers

1995 Edition

Addenda to the 1995 Edition of the Code are issued in the form of replacement pages. Revisions, additions, or deletions are incorporated directly into the affected pages. It is advisable, however, that these title sheets and all replaced pages be retained for reference.

SUMMARY OF CHANGES

This is the third and last Addenda to be published to the 1995 Edition of Section IV. Previous Addenda were published in 1995 and 1996.

Replace or insert the pages listed. Changes given below are identified on the pages by a margin note, **A97**, placed next to the affected area. Previous Addenda changes are indicated by **A95** and **A96**. The pages not listed are the reverse sides of the listed pages and contain no changes.

Page	*Location*	*Change*
iii	List of Sections	(1) Updated to include new Division 3 under Section III (2) Footnote deleted
xi–xx	Personnel	Updated to reflect A97
5	HG-100	(1) First paragraph revised and redesignated as paragraph (a) (2) Paragraphs (b) and (c) added
	HG-101.1(b)	Revised
20	HG-315.2(b)	Paragraphs (1) and (2) revised
26.2	Figure HG-326.2	Two callouts corrected by Errata
37	HG-360.2	(1) Paragraph (a) revised and redesignated as first paragraph (2) Paragraph (a) added and paragraph (b) revised
39	HG-400.2(b)	Revised
40	HG-400.3(a)	Revised
52	Figure HG-530.2	Note references and Note (3) added
55–56.1	HG-533.7	Added

Copyright © 1997
THE AMERICAN SOCIETY OF MECHANICAL ENGINEERS
All Rights Reserved



RS-002822
1/17/02
NUECES

Page	Location	Change
55–56.1	HG-540.5	First and third paragraphs revised
	HG-540.6	Second paragraph revised
58	HG-602(a)	Revised
59	HG-605(c)	Revised
60	HG-611(b)	Revised
	HG-614(d)	Corrected by Errata
66	Figure HG-703.2	Center portion deleted and two callouts revised
67	HG-709.2	Nomenclature V_s corrected by Errata
74	HF-201(c)	Added
76	HG-204.2(f)	Revised
80–84	Table HF-300.1	(1) Group No. column added (2) SA-442 stress lines deleted (3) SA-515 first stress line deleted (4) SA-210 grade revised (5) Under Butt Welded, SA-53 stress line revised (6) Under Bolting Carbon Steels (a) SA-307 stress line revised (b) SA-311 stress lines added (c) SA-320 stress lines revised (d) SA-354 Nominal Composition added (7) Under Plate Alloy Steel, SA-240 Grades 316, 316L, 439, and S44400 stress lines revised (8) Under Tube Alloy Steel, SA-213, SA-249, and SA-268 stress lines revised (9) Under Pipe Alloy Steel, SA-312 stress lines revised (10) Under Bar Alloy Steel, SA-479 stress lines revised (11) Under Forgings Alloy Steel, SA-182 stress lines revised (12) Notes (21) and (22) added
85–87	Table HF-300.2	(1) Under Copper (a) SB-12 stress line deleted (b) SB-42 and SB-75 stress lines revised (c) SB-111 annealed stress line deleted, and light and hard drawn stress lines added (d) SB-283 stress line revised (e) SB-395 first stress line deleted and second revised (2) Under Copper–Silicon, SB-96, SB-98, and SB-315 stress lines revised (3) Under Red Brass, SB-43, SB-111, and SB-395 stress lines revised (4) Under Admiralty (a) SB-43 stress line deleted (b) SB-395 and SB-171 stress lines revised

RS-002823
1/17/02
NUECES

Page	Location	Change
85–87	Table HF-300.2	(5) Under Naval Brass, SB-171 stress line revised (6) Under Copper–Nickel, SB-111, SB-171, SB-395, and SB-466 stress lines revised (7) Under Nickel–Copper (a) SB-164 first and second stress lines revised (b) SB-164 last stress line deleted (c) SB-165 stress lines revised (8) Under Integrally Finned Tubes, SB-359 stress line revised (9) Under Castings, Bronze and Brass, SB-61, SB-62, and SB-584 stress lines revised (10) Note (3) deleted and Notes (4) through (10) redesignated as (3) through (9), respectively
90	Part HF — Subpart HW Contents	Updated to reflect A97
98	HW-713	(1) Paragraph (b) revised (2) Paragraph (d) added
98.1	Table HW-713	Added
99, 99.1	HW-730.1	(1) First paragraph redesignated as paragraph (a) (2) Paragraph (b) added
143	Introduction	(1) Third paragraph revised (2) Paragraph (c) revised (3) Article 1 revised
145	HLW-100	(1) Paragraph (a) revised (2) Paragraph (d) deleted (3) Paragraphs (b), (c), (e), and (f) redesignated as (d) through (g), respectively (4) New paragraphs (b) and (c) added
	HLW-101	First paragraph redesignated as HLW-101.1 and HLW-101.2
147, 148	HLW-203(b)	Revised
150, 151	Table HLW-300	(1) Group No. column added (2) Product forms Plate, Bars and Forging, Pipe, and Bars added (3) Under Plate (a) SA-285 first three stress lines revised (b) SA-442 stress lines deleted (c) SA-455 stress lines revised (4) SA-285 Modified to Chem. stress lines revised (5) SA-414 Sheet stress lines revised (6) SA-414 Sheet Modified to Chem. stress lines revised

RS-002824
1/17/02
NUECES

Page	*Location*	*Change*
150, 151	Table HLW-300	(7) Under Bars and Forging, SA-36, SA-105, and SA-181 stress lines revised (8) Under Pipe (a) SA-53, SA-106, SA-135, and SA-178 stress lines revised (b) SA-31 stress lines deleted (9) Under Plate (a) SA-515 first stress line deleted (b) SA-515 remaining stress lines revised (c) SA-516 stress lines revised (10) Under Bars, SA-675 stress lines revised
152, 153	Table HLW-301	(1) Group No. column added (2) Under Plate Alloy Steel, SA-240 stress lines revised (3) Under Tube Alloy Steel, SA-213, SA-249, and SA-268 stress lines revised (4) Under Bar Alloy Steel, SA-479 stress lines revised (5) Under Pipe Alloy Steel, SA-312 stress lines revised (6) Under Forgings Alloy Steel, SA-182 stress lines revised
158	Figure HLW-411	Sketch (b) revised
	HLW-415(c)	Added
160	Figure HLW-413	Sketch (d) corrected by Errata
161	Figure HLW-415	Sketch (d) revised
193	A-100(b)	Revised
204	E-100	*Boiler, Vacuum* added
211	Appendix H	ASTM added by Errata
234	Form HLW-6	Corrected by Errata
237	Form HLW-8	Manufacturer's Certification and Proof Test Certificate corrected by Errata

NOTE:
Volume 41 of the Interpretations to Section IV of the ASME Boiler and Pressure Vessel Code follows the last page of the Addenda. The Interpretations are not part of the Code or the Addenda and are included for information only.

RS-002826
1/17/02
NUECES

1995 ASME
BOILER AND PRESSURE VESSEL CODE

A95

SECTIONS

I Rules for Construction of Power Boilers
II Materials
- Part A — Ferrous Material Specifications
- Part B — Nonferrous Material Specifications
- Part C — Specifications for Welding Rods, Electrodes, and Filler Metals
- Part D — Properties

III Subsection NCA — General Requirements for Division 1 and Division 2
III Division 1
- Subsection NB — Class 1 Components
- Subsection NC — Class 2 Components
- Subsection ND — Class 3 Components
- Subsection NE — Class MC Components
- Subsection NF — Supports
- Subsection NG — Core Support Structures
- Subsection NH — Class 1 Components in Elevated Temperature Service
- Appendices

III Division 2 — Code for Concrete Reactor Vessels and Containments
IV Rules for Construction of Heating Boilers
V Nondestructive Examination
VI Recommended Rules for the Care and Operation of Heating Boilers
VII Recommended Guidelines for the Care of Power Boilers
VIII Rules for Construction of Pressure Vessels
- Division 1
- Division 2 — Alternative Rules

IX Welding and Brazing Qualifications
X Fiber-Reinforced Plastic Pressure Vessels
XI Rules for Inservice Inspection of Nuclear Power Plant Components

ADDENDA

Colored-sheet Addenda, which include additions and revisions to individual Sections of the Code, are published annually and will be sent automatically to purchasers of the applicable Sections up to the publication of the 1998 Code. The 1995 Code is available only in the loose-leaf format; accordingly, the Addenda will be issued in the loose-leaf, replacement-page format.

INTERPRETATIONS

ASME issues written replies to inquiries concerning interpretation of technical aspects of the Code. The Interpretations for each individual Section will be published separately and will be included as part of the update service to that Section. They will be issued semiannually (July and December) up to the publication of the 1998 Code. Interpretations of Section III, Divisions 1 and 2, will be included with the update service to Subsection NCA. Interpretations are not part of the Code or the Addenda.

CODE CASES

The Boiler and Pressure Vessel Committee meets regularly to consider proposed additions and revisions to the Code and to formulate Cases to clarify the intent of existing requirements or provide, when the need is urgent, rules for materials or constructions not covered by existing Code rules. Those Cases which have been adopted will appear in the appropriate 1995 Code Cases book: (1) Boilers and Pressure Vessels and (2) Nuclear Components. Supplements will be sent automatically to the purchasers of the Code Cases books up to the publication of the 1998 Code.

RS-002826
1/17/02
NUECES

PERSONNEL

ASME Boiler and Pressure Vessel Committee Subcommittees, Subgroups, and Working Groups

As of July 1, 1995

MAIN COMMITTEE

D. A. Canonico, *Chair*
G. G. Karcher, *Vice Chair*
J. S. Brzuszkiewicz, *Secretary*
R. W. Barnes
F. P. Barton
D. L. Berger
M. D. Bernstein
M. N. Bressler
W. J. Carter
R. J. Cepluch
T. M. Cullen
J. R. Farr
R. E. Feigel
J. G. Feldstein
M. Gold
O. F. Hedden
H. L. Hime
A. J. Justin
W. G. Knecht
D. F. Landers
J. R. MacKay
T. J. Mawson
T. G. McCarty
G. C. Millman
R. A. Moen
C. C. Neely
J. C. Parsell
R. F. Reedy
B. W. Roberts
F. J. Schaaf, Jr.
A. Selz
K. K. Tam

HONORS AND AWARDS COMMITTEE

J. R. MacKay, *Chair*
A. J. Spencer, *Vice Chair*
U. D'Urso, *Secretary*
W. J. Carter
J. G. Feldstein
G. E. Fratcher
M. Gold
F. E. Gregor
E. C. Kistner, Jr.
T. G. McCarty
T. P. Pastor
R. F. Reedy

EXECUTIVE COMMITTEE (MAIN COMMITTEE)

G. G. Karcher, *Chair*
D. A. Canonico, *Vice Chair*
J. S. Brzuszkiewicz, *Secretary*
F. P. Barton
R. J. Cepluch
J. R. Farr
J. G. Feldstein
M. Gold
O. F. Hedden
A. J. Justin
W. G. Knecht
J. R. MacKay
R. F. Reedy
A. J. Spencer

HONORARY MEMBERS (MAIN COMMITTEE)

R. D. Bonner
R. J. Bosnak
P. M. Brister
H. M. Canavan
L. J. Chockie
J. S. Clarke
W. E. Cooper
W. D. Doty
G. E. Fratcher
R. M. Gibson
R. C. Griffin
E. J. Hemzy
E. L. Kemmler
E. C. Kistner, Jr.
E. M. Kloeblen
J. E. Lattan
J. LeCoff
J. L. Menson
F. N. Moschini
C. E. Rawlins
W. E. Somers
L. P. Zick, Jr.

MARINE CONFERENCE GROUP

J. Tiratto, *Chair*
C. F. Banks
L. W. Douthwaite
J. L. Jones
G. F. Wright

CONFERENCE COMMITTEE

J. C. Parsell — Utah *(Chair)*
A. J. Justin — National Board of Boiler and Pressure Vessel Inspectors *(Secretary)*
R. J. Aben, Jr. — Michigan
J. S. Aclaro — Los Angeles, California
J. Anderson — South Dakota
R. Barkdoll — Washington
F. P. Barton — Virginia
S. E. Brown — New Mexico
W. E. Brown — Kansas
R. R. Cate — Louisiana
L. Chase — N.W. Territories, Canada
A. Colvin, Jr. — Washington, D.C.
R. A. Coomes — Kentucky
J. Corcoran — Connecticut
M. H. Diehl, Jr. — Maryland
D. A. Douin — Illinois
D. Eastman — Newfoundland and Labrador, Canada
G. Ebeyer, Sr. — New Orleans, Louisiana
F. Ellis — New Hampshire
E. Everett — Georgia
F. Gardner — Delaware
T. G. Gottsch — Montana
J. W. Greenawalt, Jr. — Oklahoma
H. D. Hanrath — Ontario, Canada
W. J. Holmes — Chicago, Illinois
D. T. Jagger — Ohio
V. V. Kanable — Wisconsin
J. W. Kapherr — North Carolina
M. Kotb — Quebec, Canada
K. T. Lau — Alberta, Canada
J. A. Lemire — California
W. C. Lundine — Oregon
G. F. Mankel — Alaska
I. W. Mault — Manitoba, Canada
H. T. McEwen — Mississippi
A. W. Meiring — Indiana
E. J. Mossa — New Jersey
Y. Nagpaul — Hawaii
J. D. Payton — Pennsylvania
D. K. Peetz — Missouri
R. S. Pucek — Milwaukee, Wisconsin
T. E. Rennie — Arizona
D. E. Ross — New Brunswick, Canada
L. Roussinos — British Columbia, Canada
C. G. Schaber — Florida
M. Shuff — West Virginia
M. E. Skarda — Arkansas
D. A. Starr — Nebraska
R. P. Sullivan — Maine
N. Surtees — Saskatchewan, Canada
D. E. Tanner — Tennessee
R. B. West — Iowa
K. A. White — Nevada
T. F. Wickham — Rhode Island
R. A. Yeo — Nova Scotia, Canada

RS-002827
1/17/02
NUECES

Special Working Group on Review of Requirements From Global Perspectives (Main Committee)

K. Ennis, *Chair*
A. C. Ashton
G. G. Karcher
T. G. McCarty
J. J. Meyer
P. A. Molvie
R. F. Reedy

SUBCOMMITTEE ON POWER BOILERS (SC I)

J. R. MacKay, *Chair*
M. D. Bernstein, *Vice Chair*
P. D. Stumpf, *Secretary*
S. G. Bankar
D. L. Berger
E. Everett
D. N. French
F. R. Gerety
T. E. Hansen
J. S. Hunter
S. R. Irvin, Sr.
W. L. Lowry
T. C. McGough
P. A. Molvie
D. K. Parrish
R. G. Presnak
B. W. Roberts
R. D. Schueler, Jr.
R. V. Wielgoszinski
R. L. Williams
L. W. Yoder

Subgroup on Care of Power Boilers (SC I)

C. J. Berg

Subgroup on Piping (SC I)

D. L. Berger, *Chair*
T. E. Hansen, *Secretary*
M. D. Bernstein
A. J. Breugelmans
W. L. Lowry
T. C. McGough
R. G. Presnak
E. Whittle
L. W. Yoder

Subgroup on Design (SC I)

M. D. Bernstein, *Chair*
R. D. Schueler, Jr., *Vice Chair*
R. V. Wielgoszinski, *Secretary*
M. A. Farrugia
J. D. Fishburn
S. R. Irvin, Sr.
C. F. Jeerings
L. R. Meeder
P. A. Molvie
K. C. Morrison
A. Nassif
D. R. Palmer
N. Surtees

Subgroup on Materials (SC I)

B. W. Roberts, *Chair*
J. S. Hunter, *Secretary*
D. N. French
J. F. Henry
J. T. Parsons
J. M. Tanzosh

Subgroup on General Requirements (SC I)

T. C. McGough, *Chair*
M. D. Bernstein, *Vice Chair*
W. L. Lowry, *Secretary*
D. L. Berger
E. Everett
F. R. Gerety
J. M. Lyons
R. E. McLaughlin
D. K. Parrish
J. T. Pillow
R. F. Slack, Sr.
W. E. Somers
R. L. Williams
L. W. Yoder

Subgroup on Fabrication and Examination (SC I)

L. W. Yoder, *Chair*
D. L. Berger, *Secretary*
R. W. Boyce
D. N. French
J. Hainsworth
T. E. Hansen
J. S. Kandola
J. M. Lyons
R. E. McLaughlin
J. T. Pillow
M. E. Reese
R. D. Schueler, Jr.
R. F. Slack, Sr.
R. V. Wielgoszinski

SUBCOMMITTEE ON MATERIALS (SC II)

M. Gold, *Chair*
R. A. Moen, *Vice Chair*
I. R. Rodriguez, *Secretary*
A. P. Ahrendt
M. N. Bressler
A. Cohen
T. M. Cullen
R. Dirscherl
W. D. Doty
W. D. Edsall
M. H. Gilkey
J. J. Heger
J. F. Henry
B. B. Hood
G. C. Hsu
F. Masuyama
E. Michalopoulos
R. K. Nanstad
E. G. Nisbett
D. W. Rahoi
B. W. Roberts
R. R. Seeley
A. P. Seidler
C. E. Spaeder, Jr.
R. W. Swindeman
B. E. Thurgood
R. T. Webster
E. O. Woolridge
A. W. Zeuthen

Special Working Group on Non-ASTM Material Specifications (SC II)

R. Dirscherl, *Chair*
K. M. Ciciora, *Secretary*
D. C. Agarwal
J. Cameron
W. D. Doty
D. M. Fryer
M. Gold
W. M. Lundy
H. Masahisa
T. F. Miskell
R. A. Moen
F. Osweiller
A. P. Povilonis
B. W. Roberts
R. D. Schueler, Jr.
R. R. Seeley
E. A. Steen
E. O. Woolridge

Subgroup on Ferrous Specifications (SC II)

A. W. Zeuthen, *Chair*
B. M. Dingman
W. D. Edsall
T. Graham
W. N. Holliday
E. A. Jonas
D. C. Krouse
J. F. Longenecker
W. C. Mack
E. G. Nisbett
J. T. Parsons
E. J. Rozic, Jr.
R. R. Seeley
E. O. Woolridge
R. H. Zong

Subgroup on Nonferrous Alloys (SC II)

R. T. Webster, *Chair*
D. C. Agarwal
W. R. Apblett
L. G. Coffee
A. Cohen
R. Dirscherl
M. H. Gilkey
B. B. Hood
G. C. Hsu
A. P. Seidler
E. Shapiro

RS-002828
1/17/02
NUECES

Subgroup on Strength, Ferrous Alloys (SC II)

B. W. Roberts, *Chair*
J. M. Tanzosh, *Secretary*
A. P. Ahrendt
W. R. Apblett
T. M. Cullen
R. J. Diletto
M. Gold
J. J. Heger
C. L. Hoffmann
T. Imoto
F. Masuyama
R. A. Moen
D. W. Rahoi
C. E. Spaeder, Jr.
R. W. Swindeman
B. E. Thurgood

Subgroup on Strength of Weldments (SC II) & (SC IX)

B. E. Thurgood, *Chair*
W. D. Doty
D. W. Rahoi
B. W. Roberts
C. Robino
C. E. Spaeder, Jr.
W. J. Sperko
J. M. Tanzosh

Subgroup on Toughness (SC II)

R. K. Nanstad, *Chair*
J. M. Barsom
D. A. Hansen
A. Selz
R. D. Stout
R. S. Vecchio
S. Yukawa
R. Zawierucha

Subgroup on External Pressure (SC II)

C. E. Spaeder, Jr., *Chair*
D. J. Green
D. S. Griffin
E. Michalopoulos
R. W. Mikitka
D. Nadel
C. H. Sturgeon

SUBCOMMITTEE ON NUCLEAR POWER (SC III)

R. F. Reedy, *Chair*
C. J. Pieper, *Vice Chair*
C. A. Sanna, *Secretary*
J. P. Allen III
Y. Asada
J. R. Barbee
R. W. Barnes
J. N. Baysden
E. B. Branch
M. N. Bressler
F. C. Cherny
G. D. Cooper
W. D. Doty
F. R. Drahos
K. Ennis
B. A. Erler
K.-H. Hsu
R. M. Jessee
R. I. Jetter
J. W. Kapherr
D. F. Landers
W. C. LaRochelle
T. J. Mawson
W. N. McLean
R. A. Moen
D. B. Nickerson
R. F. Perrin
J. D. Stevenson
R. E. Tome
K. R. Wichman

Special Working Group on Editing and Review (SC III)

M. N. Bressler, *Chair*
W. H. Borter, *Secretary*
J. R. Barbee
G. D. Cooper
B. A. Erler
M. W. Smith

Subgroup on General Requirements (SC III & 3C)

J. N. Baysden, *Chair*
R. E. Kelley, *Secretary*
R. C. Arthurs
J. R. Barbee
C. G. Beckham
B. H. Berg
B. W. Burak
K. Ennis
J. W. Kapherr
D. R. Kulla
W. C. LaRochelle
A. S. Laurenson
M. J. Meyer
L. C. Oakes
R. F. Perrin
U. Potapovs
C. A. Sward
G. M. Tolson

Working Group on Quality Assurance and Stamping (SG-GR) (SC III)

M. J. Meyer, *Chair*
R. C. Arthurs
B. H. Berg
R. F. Perrin
G. M. Tolson

Working Group on Duties and Responsibilities (SG-GR) (SC III)

J. R. Barbee, *Chair*
A. Appleton
J. W. Kapherr
M. R. Minick
L. C. Oakes
D. V. Walshe

Subgroup on Materials, Fabrication, and Examination (SC III)

R. M. Jessee, *Chair*
W. H. Borter, *Secretary*
C. W. Allison
B. G. Carlton
F. R. Drahos
G. M. Foster
G. B. Georgiev
J. E. Harris
C. L. Hoffmann
R. W. Jackson
C. C. Kim
G. P. Milley
R. A. Moen
C. J. Pieper
R. R. Seeley
N. M. Simpson
R. C. Soin
W. J. Sperko
K. B. Stuckey

Subgroup on Design (SC III)

R. W. Barnes, *Chair*
R. S. Hill III, *Secretary*
Y. Asada
G. J. Bohm
E. B. Branch
M. N. Bressler
C. W. Bruny
W. G. Brussalis, Jr.
J. R. Cole
G. D. Cooper
R. P. Deubler
N. W. Edwards
H. D. Hanrath
R. W. Haupt
B. Jarman
D. F. Landers
L. A. Loziuk
W. N. McLean
S. E. Moore
D. B. Nickerson
E. C. Rodabaugh
B. L. Silverblatt
G. C. Slagis
J. D. Stevenson
S. W. Tagart, Jr.
J. H. Wawrzeniak
K. R. Wichman
R. Wray

Special Working Group on Dynamic Analysis (SG-D) (SC III)

M. K. Au-Yang
R. D. Blevins
G. J. Bohm
D. L. Caldwell
P.-Y. Chen
A. Hadjian
J. B. Mahoney
A. E. Meligi
F. J. Moody
S. W. Tagart, Jr.
J. Wallach

Special Working Group on Faulted Conditions (SG-D) (SC III)

G. J. Bohm, *Chair*
P. L. Anderson
M. Hartzman
W. S. LaPay
H. Lockert
P. R. Olson
R. F. Perry
J. Wallach

RS-002829
1/17/02
NUECES

Working Group on Vessels (SG-D) (SC III)

G. D. Cooper, *Chair*
C. W. Bruny
T. K. Burr, Sr.
G. A. Deaver
N. W. Edwards
H. D. Hanrath
W. J. Heilker
B. Jarman
T. M. Khan
M. W. Kinnaird
O. Maekawa
K. A. Manoly
A. Merend
G. K. Miller
W. Z. Novak
E. Pelling
P. K. Shah
H. S. Thornton
R. E. Tome

Working Group on Piping (SG-D) (SC III)

G. C. Slagis, *Chair*
T. M. Adams
G. A. Antaki
A. B. Glickstein
R. W. Haupt
R. S. Hill III
R. D. Hookway
R. B. Jenkins
M. Z. Khlafallah
G. T. Kitz
P.-T. Kuo
D. F. Landers
J. C. Minichiello
S. E. Moore
D. B. Nickerson
O. O. Oyamada
R. D. Patel
E. C. Rodabaugh
M. S. Sills
E. A. Wais

Working Group on Pumps (SG-D) (SC III)

D. B. Nickerson, *Chair*
W. A. Barham
H. L. Brammer
P. Burchett
R. B. Camper
R. Corman
R. E. Cornman, Jr.
J. G. Dudiak
A. A. Fraser
M. Higuchi
L. P. Kuah
J. W. Leavitt
R. A. Schussler
D. B. Spencer, Jr.
H. Tafarrodi
G. K. Vaghasia

Working Group on Valves (SG-D) (SC III)

W. N. McLean, *Chair*
E. A. Bake
I. L. Beltz
R. R. Brodin
R. J. Kiessel
W. G. Knecht
R. Koester
J. J. McGavin
S. N. Shields
H. R. Sonderegger
J. C. Tsacoyeanes
R. G. Visalli
J. R. Zahorsky

Working Group on Component Supports (SG-D) (SC III)

R. P. Deubler, *Chair*
U. S. Bandyopadhyay
F. J. Birch
M. N. Bressler
R. D. Ciatto
J. R. Cole
R. M. Dulin, Jr.
J. C. Finneran, Jr.
R. W. Haupt
T. O. Karppinen
T. C. LaCroix
A. S. Laurenson
A. Lee
R. J. Masterson
A. E. Meligi
A. N. Nguyen
H. Noreen, Jr.
G. M. Quinn
J. R. Stinson

Working Group on Core Support Structures (SG-D) (SC III)

J. T. Land, *Chair*
R. H. Hansen
K. B. Larsen
J. F. Mullooly
B. L. Silverblatt

Working Group on FRP Pipe (SG-D) (SC III)

L. A. Loziuk, *Chair*
F. R. Gerety
A. B. Glickstein

Working Group on Administration (SG-D) (SC III)

E. B. Branch, *Chair*
R. W. Barnes, *Vice Chair*
R. S. Hill III, *Secretary*
G. J. Bohm
G. D. Cooper
R. P. Deubler
W. N. McLean
D. B. Nickerson
G. C. Slagis
R. Wray

Subgroup on Pressure Relief (SC III)

F. C. Cherny, *Chair*
R. J. Doelling
S. F. Harrison, Jr.
K. Ijzerman
W. J. Jakubowski
E. M. Petrosky
D. J. Scallan
C. M. Schroepfer
M. W. Smith
A. L. Szeglin
J. R. Zahorsky

Subgroup on Elevated Temperature Construction (SC III)

R. I. Jetter, *Chair*
C. C. Bigelow
C. R. Brinkman
C. L. Hoffmann
K.-H. Hsu
C. C. Schultz, Jr.
B. E. Thurgood

Subgroup on Containment Systems for Spent Fuel and High Level Waste Transport Packagings (SC III)

J. D. Stevenson, *Chair*
C. A. Sanna, *Secretary*
H. H. Chung
K. Goldmann
R. M. Jessee
R. H. Jones
W. H. Lake
R. W. Lambert
H. W. Lee
R. D. McGuire
R. E. Nickell
D. J. Nolan
D. T. Raske
T. Saegusa
R. H. Smith
K. B. Sorenson
W. W. Teper
P. Turula
N. Urabe
C. R. Witt
S. Yukawa

Working Group on General Requirements (SG-NUPACK) (SC III)

K. Goldmann, *Chair*
C. R. Witt

Working Group on Material (SG-NUPACK) (SC III)

S. Yukawa, *Chair*
D. J. Green
H. W. Lee
J. T. Martin
P. McConnell
M. W. Schwartz
K. B. Sorenson
M. P. Walsh

Working Group on Design (SG-NUPACK) (SC III)

J. D. Stevenson, *Chair*
A. G. Eggers
R. Glass
C. A. Miller
R. E. Nickell
W. W. Teper
P. Turula
H. H. Woo

Working Group on Fabrication and Examination (SG-NUPACK) (SC III)

R. H. Smith, *Chair*
R. M. Jessee
R. D. McGuire
D. T. Raske
A. J. Spencer
M. A. Whitney

RS-002830
1/17/02
NUECES

JOINT ACI-ASME COMMITTEE ON CONCRETE COMPONENTS FOR NUCLEAR SERVICE (SC-3C)

B. A. Erler, *Chair*
D. Poulis, *Secretary*
D. G. Adams
J. P. Allen III
J. F. Artuso
R. M. Attar
A. C. Eberhardt
J. Gutierrez
D. J. Haavik
D. C. Jeng
T. E. Johnson
G. R. Murphy
R. G. Oesterle
S. F. Putman
B. B. Scott
R. E. Shewmaker
J. D. Stevenson
A. Y. Wong

Subgroup on Materials, Construction, and Examination (SC-3C)

D. J. Haavik, *Chair*
J. P. Allen III
J. F. Artuso
R. M. Attar
B. A. Erler
J. Gutierrez
D. C. Jeng
G. R. Murphy

Subgroup on Design (SC-3C)

B. B. Scott, *Chair*
D. G. Adams
A. C. Eberhardt
T. E. Johnson
R. G. Oesterle
S. F. Putman
R. E. Shewmaker
J. D. Stevenson
A. Y. Wong

SUBCOMMITTEE ON HEATING BOILERS (SC IV)

F. P. Barton, *Chair*
R. B. Duggan, *Vice Chair*
P. A. Reddington, *Secretary*
G. E. Fratcher
J. W. Greenawalt, Jr.
W. L. Haag, Jr.
W. M. Hiddleston
J. D. Hoh
S. R. Irvin, Sr.
K. M. McTague
P. A. Molvie
R. I. Mullican
E. A. Nordstrom
J. L. Seigle
D. E. Tanner
S. V. Voorhees
R. H. Weigel
R. V. Wielgoszinski
J. I. Woodworth
T. L. Bedeaux, Alternate

Subgroup on Care and Operation of Heating Boilers (SC IV)

R. I. Mullican, *Chair*
J. W. Greenawalt, Jr.
F. M. Lucas
K. M. McTague
P. A. Molvie
R. H. Weigel
T. F. Wickham
T. L. Bedeaux, Alternate

Subgroup on Water Heaters (SC IV)

G. E. Fratcher, *Chair*
W. L. Haag, Jr., *Vice Chair*
J. W. Greenawalt, Jr.
D. M. Hanning
W. M. Hiddleston
F. M. Lucas
K. M. McTague
R. I. Mullican
D. E. Tanner
E. L. West

Subgroup on Cast Iron Boilers (SC IV)

K. M. McTague, *Chair*
R. B. Duggan
R. H. Weigel
T. F. Wickham
J. I. Woodworth
T. L. Bedeaux, Alternate

Subgroup on Welded Boilers (SC IV)

P. A. Molvie, *Chair*
E. A. Nordstrom
J. L. Seigle
R. F. Slack, Sr.
C. R. Starke
R. P. Sullivan
R. V. Wielgoszinski

SUBCOMMITTEE ON NONDESTRUCTIVE EXAMINATION (SC V)

T. G. McCarty, *Chair*
H. C. Graber, *Vice Chair*
U. D'Urso, *Secretary*
A. S. Birks
B. H. Clark, Jr.
N. Y. Faransso
B. E. Foster
O. F. Hedden
G. W. Hembree
F. B. Kovacs
W. C. McGaughey
R. D. McGuire
R. Paillaman
C. N. Sherlock
D. A. Starr
D. A. White

Subgroup on Radiography (SC V)

G. W. Hembree, *Chair*
S. J. Akrin
J. E. Batey
N. Y. Faransso
B. E. Foster
F. B. Kovacs
C. N. Sherlock

Subgroup on Ultrasonics (SC V)

R. Paillaman, *Chair*
W. T. Clayton
O. F. Hedden
P. J. Herbert
J. F. Manning
R. W. McClung
W. C. McGaughey
F. J. Sattler
M. L. Shakinovsky
J. C. Spanner, Sr.

Subgroup on Acoustic Emission (SC V)

D. A. White, *Chair*
B. H. Clark, Jr.
N. O. Cross
P. M. Horrigan
J. F. Manning
J. R. Mitchell
J. C. Spanner, Sr.

Subgroup on General Requirements and Surface Examination (SC V)

H. C. Graber, *Chair*
A. S. Birks
W. G. Blankenship
B. H. Clark, Jr.
R. M. Jessee
L. C. Ludwig
J. R. MacKay
R. D. McGuire
D. A. Starr

SUBCOMMITTEE ON PRESSURE VESSELS (SC VIII)

J. R. Farr, *Chair*
T. P. Pastor, *Vice Chair*
A. J. Roby, *Secretary*
A. P. Ahrendt
V. Bogosian
S. M. Caldwell
W. J. Carter
R. J. Cepluch
S. C. Cyr
R. M. Elliott
R. E. Feigel
J. G. Feldstein
G. E. Fratcher
J. Hainsworth
H. L. Hime
M. J. Houle
W. S. Jacobs
G. G. Karcher
G. B. Komora
K. T. Lau
R. W. Mikitka
U. R. Miller
K. Mokhtarian
C. C. Neely
K. J. Schneider
A. Selz
J. R. Sims, Jr.
A. J. Spencer
E. A. Steen
K. K. Tam
E. L. Thomas, Jr.

RS-002831
1/17/02
NUECES

Special Working Group on Heat Transfer Equipment (SC VIII)

U. R. Miller, *Chair*
R. P. Zoldak, *Secretary*
C. F. Andreone
D. E. Bolt
S. M. Caldwell
T. K. Haldas
W. G. Jandrasits
G. G. Karcher
R. Mahadeen
J. R. McCutchen
F. Osweiller
R. K. Rothenbucher
J. E. Soehrens
A. I. Soler
W. A. Treff
S. Yokell

Special Working Group on High Pressure Vessels (SC VIII)

J. R. Sims, Jr., *Chair*
M. Weinstock, *Secretary*
L. P. Antalffy
J. E. Baxter
R. C. Biel
T. B. Boyd
D. J. Burns
P. N. Chaku
E. L. Danfelt
R. E. Feigel
D. M. Fryer
J. F. Harvey
J. L. Heck, Jr.
A. H. Honza
V. T. Hwang
M. M. James
J. A. Kapp
D. P. Kendall
A. K. Khare
S. C. Mordre
G. J. Mraz
L. K. Ohlsson
E. H. Perez
E. R. Sliwinski
W. L. Stewart
J. F. Sullivan
F. W. Tatar
D. A. Wells

Special Working Group on Toughness (SC VIII)

A. Selz, *Chair*
W. D. Doty
D. A. Hansen
W. S. Jacobs
G. G. Karcher
G. B. Komora
K. Mokhtarian
J. L. Mooney
C. C. Neely
M. D. Rana
J. W. Stokes

Subgroup on General Requirements (SC VIII)

R. M. Elliott, *Chair*
A. P. Ahrendt
V. Bogosian
W. J. Carter
R. J. Cepluch
W. P. Crow
E. Everett
C. R. Good
D. B. Kadakia
J. C. Keenan
A. S. Mann
C. C. Neely
A. S. Olivares
K. J. Schneider
A. J. Spencer

Subgroup on Materials (SC VIII)

J. Hainsworth, *Chair*
D. C. Agarwal
A. P. Ahrendt
R. Dirscherl
W. D. Doty
H. L. Hime
W. M. Lundy
J. D. McLoughlin
E. E. Morgenegg
E. G. Nisbett
J. T. Parsons
D. W. Rahoi
K. K. Tam
B. K. Thakur
W. N. Van Riet
T. L. Warner
D. A. Wells

Subgroup on Design (SC VIII)

K. Mokhtarian, *Chair*
R. E. Knoblock, *Secretary*
M. R. Bauman
N. W. Edwards
J. R. Farr
J. A. Hayward
G. L. Hollinger
W. S. Jacobs
G. G. Karcher
G. B. Komora
R. W. Mikitka
U. R. Miller
T. P. Pastor
M. D. Rana
A. Selz
C. Shah
S. C. Shah
J. W. Stokes
K. K. Tam
E. L. Thomas, Jr.

Subgroup on Fabrication and Inspection (SC VIII)

E. A. Steen, *Chair*
K. Mokhtarian, *Vice Chair*
W. J. Bees
R. W. Boyce
J. R. Buller
S. C. Cyr
R. E. Feigel
H. E. Gordon
M. J. Houle
R. J. Johnson
A. S. Lester III
W. R. Mikesell, Jr.
M. J. Rice
W. P. Webb

Working Group on Layered Vessels (SGFI) (SC VIII)

G. E. Fratcher, *Chair*
G. B. Komora
C. Shah
S. C. Shah
W. N. Van Riet

SUBCOMMITTEE ON WELDING (SC IX)

J. G. Feldstein, *Chair*
W. J. Sperko, *Vice Chair*
J. Labrador, *Secretary*
R. Barkdoll
D. A. Bowers
M. L. Carpenter
W. D. Doty
P. D. Flenner
M. J. Houle
R. A. Johnson
W. M. Lundy
R. D. McGuire
J. J. Meyer
A. H. Miller
B. R. Newmark
P. P. Norris
S. D. Reynolds, Jr.
W. K. Scattergood
L. J. Serre, Jr.
G. W. Spohn III
M. J. Stanko
K. C. Taber
J. M. Tanzosh
R. R. Young

Subgroup on Materials (SC IX)

M. L. Carpenter, *Chair*
L. P. Connor
P. D. Flenner
R. M. Jessee
A. H. Miller
C. E. Sainz
C. E. Spaeder, Jr.
W. J. Sperko
M. J. Stanko
K. C. Taber
R. R. Young

Subgroup on General Requirements (SC IX)

B. R. Newmark, *Chair*
R. Barkdoll
P. C. Filean
R. M. Jessee
C. G. May
A. S. Olivares
C. E. Wainwright
R. A. Weiss
K. R. Willens

RS-002832
1/17/02
NUECES

Subgroup on Procedure Qualification (SC IX)

J. J. Meyer, *Chair*
R. K. Brown, Jr.
H. L. Helmbrecht
R. A. Johnson
A. H. Miller
P. P. Norris
A. S. Olivares
F. C. Ouyang
S. D. Reynolds, Jr.
M. J. Rice
W. K. Scattergood
L. J. Serre, Jr.
D. E. Smith
W. J. Sperko
T. C. Wiesner

Subgroup on Performance Qualification (SC IX)

J. J. Meyer, *Chair*
V. A. Bell
D. A. Bowers
L. P. Connor
P. D. Flenner
G. Herrmann
M. J. Houle
W. M. Lundy
R. D. McGuire
S. R. Nordman
P. P. Norris
W. K. Scattergood
G. W. Spohn III

Subgroup on Brazing (SC IX)

L. J. Serre, Jr., *Chair*
A. S. Artayet
M. L. Carpenter
A. H. Miller
C. Robino
K. C. Taber

SUBCOMMITTEE ON FIBER-REINFORCED PLASTIC PRESSURE VESSELS (SC X)

P. J. Conlisk, *Chair*
D. Eisberg, *Vice Chair*
A. J. Roby, *Secretary*
K. M. Agrawal
F. Brown
J. L. Bustillos
T. W. Cowley
T. J. Fowler
S. V. Hoa
L. E. Hunt
J. C. Murphy
A. L. Newberry
K. C. Owen
J. A. Rolston
P. R. Wilt

SUBCOMMITTEE ON NUCLEAR INSERVICE INSPECTION (SC XI)

O. F. Hedden, *Chair*
T. J. Mawson, *Vice Chair*
S. D. Weinman, *Secretary*
C. W. Allison
W. H. Bamford, Jr.
R. L. Beverly
J. M. Bloom
R. W. Boyce
C. D. Cowfer
D. D. Davis
T. N. Epps III
R. E. Gimple
F. E. Gregor
L. B. Gross
R. H. Hansen
K. Iida
C. A. Ireland
R. D. Kerr
J. J. Lance
D. F. Landers
T. F. Lentz
G. C. Millman
C. R. Osman
G. J. Pitzl
P. C. Riccardella
L. Sage
F. J. Schaaf, Jr.
W. J. Shack
J. E. Staffiera
R. P. Sullivan
R. W. Swayne
R. J. Tamminga
J. C. Tobin
N. Lane, Representative

Special Working Group on Plant Life Extension (SC XI)

F. E. Gregor, *Chair*
D. D. Davis
D. A. Graham
D. A. Jackson
M. P. Lintz
H. W. Massie, Jr.
V. V. Miselis
A. K. Moonka
D. A. Piccione
V. N. Shah
R. J. Tamminga

Special Working Group on Editing and Review (SC XI)

R. W. Swayne, *Chair*
R. L. Beverly
L. B. Gross
J. E. Staffiera
C. J. Wirtz

Working Group on General Requirements (SC XI)

R. J. Tamminga, *Chair*
A. T. Roberts III, *Secretary*
R. G. Edl
J. Goodman
D. A. Graham
L. B. Gross
C. A. Ireland
G. Johnson
R. K. Mattu
R. J. Scott
B. K. Walker
T. M. Zwick

Subgroup on Water-Cooled Systems (SC XI)

T. F. Lentz, *Chair*
K. Christian, *Secretary*
C. W. Allison
A. J. Birkle
W. J. Briggs
J. E. Charnley
D. D. Davis
A. F. Deardorff
R. L. Dyle
L. B. Gross
T. C. Hinkle
C. E. Jensen
S. D. Kulat
J. J. Lance
M. P. Lintz
C. V. Moore
F. J. Schaaf, Jr.
J. E. Staffiera
E. J. Sullivan, Jr.
C. W. Tahnk
R. J. Tamminga
D. E. Tanner
F. Tehranchi
G. Wasilenko

Working Group on Inspection of Systems and Components (SG-WCS) (SC XI)

R. L. Dyle, *Chair*
J. C. Rivers, *Secretary*
G. Belew
T. W. Brombach
R. Fougerousse
D. A. Gallino
M. R. Hum
S. D. Kulat
J. T. Lindberg
M. P. Lintz
C. Pendleton
C. M. Ross
C. W. Tahnk
E. Throckmorton
R. A. West

Special Working Group on Low Temperature Heavy Water Reactors (SG-WCS) (SC XI)

C. D. Cowfer, *Chair*
C. A. Ireland
J. M. Morrison
J. C. Rivers
K. F. Schmidt
N. Vormelker

Working Group on Pressure Testing (SG-WCS) (SC XI)

F. J. Schaaf, Jr., *Chair*
G. P. Alexander
T. R. Bugelholl
R. J. Cimoch
A. C. Gladney
C. E. Jensen
W. N. Keisler
G. E. Rhedrick
E. J. Sullivan, Jr.

Working Group on Implementation of Risk Based Examination (SC XI)

J. J. Lance, *Chair*
F. A. Simonen, *Secretary*
A. F. Deardorff
A. Hiser, Jr.
J. T. Lindberg
I. Mach
A. McNeill III
E. Michalopoulos
J. Muscara
J. H. Phillips
T. V. Vo
R. A. West

RS-002833
1/17/02
NUECES

Working Group on Concrete Containment (SG-WCS) (SC XI)

W. J. Briggs, *Chair*
B. Talmadge, *Secretary*
H. G. Ashar
T. L. Bradley
K. K. N. Chao
H. T. Hill
R. D. Hough
C. N. Krishnaswamy
D. Naus
C. G. Ranganath

Working Group on Metal Containment (SG-WCS) (SC XI)

J. E. Staffiera, *Chair*
R. N. Watson, *Secretary*
W. J. Briggs
K. K. N. Chao
N. W. Edwards
M. J. Ferlisi
R. W. Hammelmann
W. E. Norris
S. C. Petitgout
C. G. Ranganath
G. W. Robin
R. T. Zak

Subgroup on Gas-Cooled Systems (SC XI)

R. H. Hansen, *Chair*
M. Basol
J. F. Cook
M. P. Lintz
P. O'Brien

Subgroup on Liquid-Metal Cooled Systems (SC XI)

C. G. McCargar, *Chair*
W. L. Chase
S. Hattori
W. Kwant
L. R. Monson
W. J. Rowan
J. C. Tobin

Working Group on Liquid-Metal Reactor Covers (SG-LMCS) (SC XI)

W. L. Chase, *Chair*
S. Hattori
R. Hundal
W. Kwant

Subgroup on Evaluation Standards (SC XI)

W. H. Bamford, Jr., *Chair*
M. Kupinski, *Secretary*
J. M. Bloom
R. C. Cipolla
R. M. Gamble
T. J. Griesbach
P. J. Hijeck
K. Iida
Y. Imamura
J. G. Merkle
S. Ranganath
P. C. Riccardella
D. A. Scarth
W. L. Server
P. Shewmon
C. A. Tomes
W. A. Van Der Sluys
K. R. Wichman
K. K. Yoon
S. Yukawa

Working Group on Operating Plant Criteria (SG-ES) (SC XI)

T. J. Griesbach, *Chair*
R. M. Gamble, *Secretary*
W. H. Bamford, Jr.
H. Behnke
A. F. Billy
W. Brady
W. C. Cliff
S. R. Gosselin
E. Hackett
C. J. Hardin
S. A. Henry
P. J. Hijeck
M. Kupinski
S. D. Leshnoff
A. G. Panagos
J. S. Panesar
W. E. Pennell
J. H. Phillips
S. Ranganath
S. T. Rosinski
W. L. Server
V. N. Shah
E. A. Siegel
F. A. Simonen
K. K. Yoon
S. Yukawa

Working Group on Flaw Evaluation (SG-ES) (SC XI)

R. C. Cipolla, *Chair*
J. M. Bloom, *Secretary*
W. H. Bamford, Jr.
M. Basol
N. W. Edwards
E. Friedman
T. J. Griesbach
D. N. Hopkins
K. Iida
Y. Imamura
M. Kupinski
H. S. Mehta
J. G. Merkle
J. S. Panesar
R. K. Qashu
P. P. Raju
S. Ranganath
D. A. Scarth
T. S. Schurman
W. L. Server
F. A. Simonen
K. R. Wichman
G. M. Wilkowski
K. K. Yoon
S. Yukawa
A. Zahoor
V. A. Zilberstein

Working Group on Pipe Flaw Evaluation (SG-ES) (SC XI)

D. A. Scarth, *Chair*
G. M. Wilkowski, *Secretary*
W. H. Bamford, Jr.
J. M. Bloom
R. C. Cipolla
N. G. Cofie
S. K. Daftuar
G. H. De Boo
E. Friedman
D. N. Hopkins
K. Iida
H. S. Mehta
J. G. Merkle
J. S. Panesar
D. F. Quinones
K. K. Yoon
S. Yukawa
A. Zahoor
V. A. Zilberstein

Subgroup on Nondestructive Examination (SC XI)

R. L. Beverly, *Chair*
N. R. Bentley, *Secretary*
D. C. Adamonis
F. L. Becker
F. T. Carr
C. B. Cheezem
W. T. Clayton
J. F. Cook
C. D. Cowfer
F. J. Dodd
T. N. Epps III
D. O. Henry
M. R. Hum
S. N. Liu
R. D. McGuire
M. C. Modes
C. R. Osman
J. C. Spanner, Jr.
J. C. Spanner, Sr.
C. J. Wirtz

Working Group on Procedure Qualification and Volumetric Examination (SG-NDE) (SC XI)

C. D. Cowfer, *Chair*
D. C. Adamonis
F. L. Becker
F. T. Carr
C. B. Cheezem
W. T. Clayton
R. A. Courtney
F. J. Dodd
T. N. Epps III
R. A. Kellerhall
M. C. Modes
M. Saporito
T. T. Taylor

Working Group on Personnel Qualification and Surface Visual and Eddy Current Examination (SG-NDE) (SC XI)

J. F. Cook, *Chair*
C. J. Wirtz, *Secretary*
B. L. Curtis
N. Economos
H. B. Garland
D. O. Henry
H. E. Houserman
J. J. McArdle III
R. D. McGuire
S. A. Redner
M. F. Sherwin
A. L. Smith
D. Spake
J. C. Spanner, Jr.
J. C. Spanner, Sr.

RS-002834
1/17/02
NUECES

Subgroup on Repairs, Replacements, and Modifications (SC XI)

R. E. Gimple, *Chair*
R. S. Lewis, *Secretary*
R. W. Boyce
M. N. Bressler
A. L. Finney
C. E. Hartz
R. A. Hermann
W. C. Holston
C. A. Ireland
R. D. Kerr
D. F. Landers
T. J. Mawson
M. S. McDonald
G. J. Pitzl
R. R. Stevenson
R. P. Sullivan
R. W. Swayne
S. Tobey
R. E. Tome
B. K. Walker
D. E. Waskey
R. A. Yonekawa

Working Group on Welding and Special Repair Processes (SG-RR&M) (SC XI)

D. E. Waskey, *Chair*
R. E. Cantrell, *Secretary*
D. A. Delsignore
A. L. Finney
P. D. Fisher
A. J. Giannuzzi
R. A. Hermann
R. D. Kerr
B. R. Newton
P. P. Norris
J. E. O'Sullivan
S. Tobey
K. R. Willens

Working Group on Design Reconciliation (SG-RR&M) (SC XI)

W. C. Holston, *Chair*
R. E. Tome, *Secretary*
R. W. Boyce
J. R. Brunozzi
J. E. Charnley
E. V. Imbro
D. N. Irvine, Jr.
D. F. Landers
G. J. Pitzl
R. W. Swayne
F. Tehranchi
H. J. Thailer

Working Group on Responsibilities and Program Requirements (SG-RR&M) (SC XI)

R. A. Yonekawa, *Chair*
R. R. Stevenson, *Secretary*
C. E. Hartz
R. T. Huerter
R. L. Kurtz
R. S. Lewis
M. S. McDonald
U. Potapovs
S. M. Swilley
A. J. Walcutt
C. N. Williams

Subgroup on Inservice Inspection of Core Support Structures (SC XI)

J. T. Lindberg, *Chair*
J. F. Mullooly, *Secretary*
H. Behnke
M. M. Behravesh
S. Chandra
C. L. Child
J. T. Land
W.-C. Liu
G. A. Lofthus
A. L. Smith
J. C. Tobin
S. M. Walker

SUBCOMMITTEE ON SAFETY VALVE REQUIREMENTS (SC-SVR)

E. C. Kistner, Jr., *Chair*
M. D. Bernstein, *Vice Chair*
U. D'Urso, *Secretary*
J. F. Ball
W. E. Brown
J. A. Cox
R. J. Doelling
R. G. Friend
H. I. Gregg
S. F. Harrison, Jr.
S. R. Irvin, Sr.
D. B. Kadakia
C. A. Neumann
M. Robinson
C. M. Schroepfer
A. J. Spencer
J. C. Standfast
E. A. Steen
L. L. Thompson
J. A. West
G. T. Zirps
T. J. Ferrigan, Alternate

Subgroup on General Requirements (SC-SVR)

M. D. Bernstein, *Chair*
J. F. Ball
W. E. Brown
C. A. Neumann
J. W. Reynolds
M. Robinson
J. C. Standfast
L. L. Thompson

Subgroup on Testing (SC-SVR)

S. F. Harrison, Jr., *Chair*
J. A. Cox
V. M. DeLuca
W. F. Hart
S. R. Irvin, Sr.
D. M. Papa
D. J. Scallan
C. M. Schroepfer
G. T. Zirps

Subgroup on Design (SC-SVR)

R. G. Friend, *Chair*
J. Cahoon, Jr.
R. J. Doelling
H. I. Gregg
D. B. Kadakia
C. F. Laitner
P. R. Sievert
A. J. Spencer
E. A. Steen
T. R. Tarbay
J. A. West

SUBCOMMITTEE ON DESIGN (SC-D)

W. J. Carter, *Chair*
R. I. Jetter, *Vice Chair*
P. A. Reddington, *Secretary*
R. W. Barnes
J. L. Hechmer
O. F. Hedden
R. W. Mikitka
K. Mokhtarian
W. J. O'Donnell
R. D. Schueler, Jr.
M. P. Schwartz
A. Selz
R. E. Tome

Special Working Group on Bolted Flanged Joints (SC-D)

R. W. Mikitka, *Chair*
G. D. Bibel
G. Kharshafdjian
D. L. Kurle
E. Michalopoulos
J. R. Payne
R. W. Schneider
R. D. Schueler, Jr.
A. Selz

Subgroup on Openings (SC-D)

M. P. Schwartz, *Chair*
R. W. Mikitka, *Secretary*
M. R. Breach
V. T. Hwang
S. C. Lou
R. B. Luney
K. Mokhtarian
K. C. Morrison
D. R. Palmer
M. D. Rana
E. C. Rodabaugh
R. W. Schneider
G. M. Tunnell, Jr.

Subgroup on Design Analysis (SC-D)

J. L. Hechmer, *Chair*
T. P. Pastor, *Secretary*
P. J. Conlisk
A. G. Eggers
G. L. Hollinger
D. P. Jones
A. Kalnins
W. J. Koves
T. H. Liu
O. Maekawa
A. Merend
T. V. Narayanan
E. R. Sliwinski
S. A. Swamy
E. L. Thomas, Jr.

RS-002836
1/17/02
NUECES

Subgroup on Elevated Temperature Design (SC-D)

R. I. Jetter, *Chair*
J. M. Corum, *Secretary*
C. Becht IV
C. R. Brinkman
R. D. Campbell
D. S. Griffin
C. Lawton
S. Majumdar
R. K. Mattu
L. C. Nieh
W. J. O'Donnell
C. C. Schultz, Jr.
L. K. Severud
D. F. Shaw
A. L. Snow
B. E. Thurgood

Subgroup on Fatigue Strength (SC-D)

W. J. O'Donnell, *Chair*
C. R. Brinkman
P. R. Donavin
J. A. Hayward
J. L. Hechmer
L. A. James
D. P. Jones
G. Kharshafdjian
C. Lawton
M. J. Manjoine
A. Merend
H. H. Ziada

SUBCOMMITTEE ON BOILER AND PRESSURE VESSEL ACCREDITATION (SC-BPVA)

A. J. Spencer, *Chair*
A. J. Justin, *Vice Chair*
K. I. Baron, *Secretary*
D. W. Anacki
V. A. Bell
M. B. Doherty
D. A. Douin
P. D. Edwards
R. M. Elliott
C. E. Ford
J. J. Greene
R. C. Howard
S. R. Irvin, Sr.
M. L. Sisk
R. V. Wielgoszinski
V. Bogosian, Alternate
S. C. Cyr, Alternate
J. R. Farr, Alternate
R. C. Friend, Alternate
W. F. Hathaway, Alternate
V. V. Kanable, Alternate
W. C. LaRochelle, Alternate
A. S. Lester III, Alternate
W. M. Lundy, Alternate
B. B. MacDonald, Alternate
K. M. McTague, Alternate
P. C. Scheckermann, Alternate
B. C. Turczynski, Alternate

SUBCOMMITTEE ON NUCLEAR ACCREDITATION (SC-NA)

T. E. Quaka, *Chair*
S. Wunsch, *Secretary*
C. W. Allison
J. R. Barbee
M. N. Bressler
S. DasGupta
G. Deily
F. R. Drahos
R. E. Gimple
J. E. Harris
M. Kotb
W. C. LaRochelle
U. Potapovs
A. J. Spencer
R. R. Stevenson
G. M. Tolson
R. W. Boyce, Alternate
W. H. Chamberlain, Alternate
J. P. Ellenberger, Alternate
R. E. Feigel, Alternate
H. D. Hanrath, Alternate
S. F. Hatch, Alternate
A. J. Justin, Alternate
N. C. Kist, Alternate
L. C. Oakes, Alternate
H. B. Prasse, Alternate
J. M. Salasky, Alternate
D. J. Skoza, Alternate
R. E. Tilton, Staff Representative

RS-002836
1/17/02
NUECES

ARTICLE 1
SCOPE AND SERVICE RESTRICTIONS

HG-100 SCOPE

The requirements of Part HG apply to steam heating boilers, hot water heating boilers, hot water supply boilers, and to appurtenances thereto, and shall be used in conjunction with the specific requirements in Part HF, Boilers of Wrought Materials, and Part HC, Cast Iron Boilers, whichever is applicable. Part HG is not intended to apply to potable water heaters except as provided for in Part HLW.

HG-101 SERVICE RESTRICTIONS

HG-101.1 Service Restrictions. The rules of this Section are restricted to the following services:

(a) steam boilers for operation at pressures not exceeding 15 psi;

(b) hot water heating boilers and hot water supply boilers for operating at pressures not exceeding 160 psi and/or temperatures not exceeding 250°F, at or near the boiler outlet.

HG-101.2 Services in Excess of Those Covered by This Section. For services exceeding the limits specified in HG-101.1, the rules of Section I shall apply.

RS-002837
1/17/02
NUECES

ARTICLE 2
MATERIAL REQUIREMENTS

HG-200 GENERAL MATERIAL REQUIREMENTS

HG-200.1 Materials Subject to Pressure Stress. Material subject to stress due to pressure shall conform to one of the specifications given in Section II and shall be limited to those that are permitted in HF-200 for boilers of wrought materials and HC-200 for cast iron boilers.

HG-200.2 Internal Parts Subject to Deterioration. Materials shall not be used for internal parts which are liable to fail due to deterioration when subjected to saturated steam temperatures at or below the maximum allowable working pressure.

HG-200.3 Materials Not Found in Section II. Material not covered by specifications in Section II shall not be used unless authorization to use the material is granted by the Boiler and Pressure Vessel Committee on the basis of data submitted to the Committee in accordance with Appendix A.

HG-200.4 Materials Use Not Limited by Specification Title. The title or scope paragraph of a material specification in Section II as respects product form or service shall not limit the use of a material, provided the material is suitable for the application and its use is permitted by the rules of this Section.

HG-200.5 Materials Use Not Limited by Method of Production. Materials covered by specifications in Section II are not restricted as to the method of production unless so stated in the Specification, and as long as the product complies with the requirements of the Specification.

HG-200.6 Materials With Thicknesses Exceeding Specification Limits. Materials having thicknesses outside of the limits given in the title or scope clause of a specification in Section II may be used in construction, provided they comply with the other requirements of the Specification and with all thickness requirements of this Code.

HG-200.7 Materials Not Identified by Mill Test Reports. Materials not identified by mill test reports may be used for nonpressure parts such as baffles, external supports, and insulating rings, the failure of which will not endanger the vessel to which they are attached. The allowable stress value shall not exceed 80% of the maximum allowable stress permitted for similar material in Tables HF-300.1 and HF-300.2. Satisfactory performance of a specimen in such service shall not make the material acceptable for use in pressure parts of a vessel.

HG-201 SPECIFIC MATERIAL REQUIREMENTS

Specific material requirements for assemblies constructed of wrought materials are given in Part HF, Article 2 and for assemblies constructed of cast iron in Part HC, Article 2.

RS-002838
1/17/02
NUECES

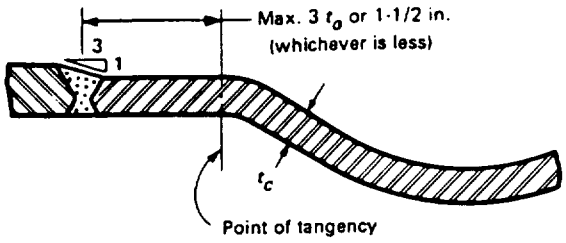

FIG. HG-312.6 CONNECTION BETWEEN PLAIN AND CORRUGATED FURNACE

(d) the full penetration weld joining a plain self-supporting section to a corrugated self-supporting section shall be located as shown in Fig. HG-312.6.

HG-312.8 Semicircular Furnaces or Crown Sheets Subjected to External Pressure. Unstayed furnaces or crown sheets where the top portion is semicircular and the unstayed portion does not exceed 120 deg. in arc shall conform to the following.

(a) The thickness of the semicircular furnace or crown sheet shall be not less than $^5/_{16}$ in.

(b) The design temperature of the semicircular furnace or crown sheet shall be taken as 500°F.

(c) Semicircular portions of the furnace or crown sheet shall be rolled to practically a true circle, with a maximum deviation from the true circle of not more than $^1/_4$ in.

(d) The allowable working pressure of the semicircular furnace or crown sheet shall be not more than 70% of P_a as computed from the procedure outlined in HG-312.1 and HG-312.3 and using the applicable chart, Fig. HG-312.1 or Fig. HG-312.2.

(e) Bar Reinforcement

(1) Bar reinforcement, when required to reduce the effective furnace length L, shall be computed using the formulas in HG-312.5 and HG-312.4.

(2) Bar reinforcement shall be fabricated and installed as shown in Fig. HG-312.7.

(3) Bar reinforcement, after fabrication, shall have a thickness of not less than $^5/_{16}$ in. and not more than $^{13}/_{16}$ in. and in no case thicker than $1^1/_4$ times the wall section of the semicircular portion.

(4) The ratio of height of the bar reinforcement to its thickness H_r/T_r shall be not more than eight nor less than three.

(f) For unstayed furnaces or crown sheets, where the top portion is semicircular and the unstayed portion exceeds 120 deg. in arc, that portion exceeding the 120 deg. arc shall be stayed as a flat plate in accordance with HG-340.

HG-315 THICKNESS OF TUBES

HG-315.1 Ferrous Tubes. The minimum thickness of ferrous tubes subject to internal pressure shall be as follows:

Outside Diameter D, in.	Minimum Wall Thickness T, in.
1 or over but less than $2^1/_2$	0.095
$2^1/_2$ or over but less than $3^1/_4$	0.105
$3^1/_4$ or over but less than 4	0.120
4 or over but less than 5	0.135
5 or over but less than 6	0.150

NOTE: The minimum wall thickness of steel or wrought iron tubes 6 in. outside diameter and larger shall be calculated by the formula:

$$t = 0.0251D$$

where

D = outside diameter of tube, in.

t = minimum wall thickness, in.

For tubes subject to external pressure see 312.2.

HG-315.2 Nonferrous Tubes. The minimum thickness of nonferrous tubes, whether straight, bent, or coiled, shall be as follows.

(a) Installed by Rolling

(1) Where the design pressure is over 30 psi,

$$t = D/30 + 0.03$$

(2) Where the design pressure does not exceed 30 psi,

$$t = D/45 + 0.03$$

where

D = outside diameter of tube, in.

t = minimum wall thickness, in.

(3) In no case shall a tube installed by rolling be thinner than 0.061 in.

(b) Installed by Welding, or Brazing, or With Flared Connections, Assembled With Copper or Copper Alloy Fittings

RS-002839
1/17/02
NUECES

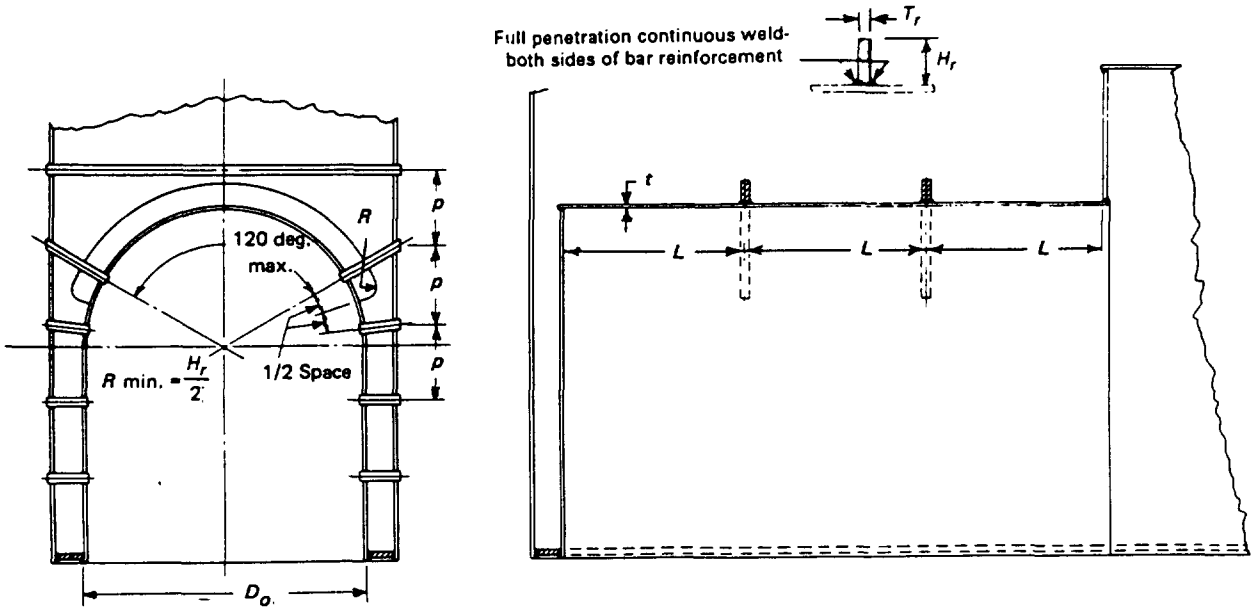

FIG. HG-312.7 ACCEPTABLE TYPE OF SEMICIRCULAR FURNACE REINFORCEMENT

(1) Where the design pressure is over 30 psi:

Material	Spec. No.	Formula
Cu	SB-75, SB-111	$t = D/50 + 0.027$ in.
Red Brass	SB-43, SB-111, SB-395	$t = D/40 + 0.03$ in.
Admiralty	SB-43, SB-395	$t = D/45 + 0.03$ in.
70–30 Cu–Ni	SB-111, SB-395	$t = D/55 + 0.03$ in.
80–20 Cu–Ni	SB-111, SB-395	$t = D/50 + 0.03$ in.
90–10 Cu–Ni	SB-111, SB-395	$t = D/65 + 0.03$ in.
Cu–Si	SB-315 Alloy 655	$t = D/65 + 0.03$ in.

(2) Where the design pressure does not exceed 30 psi:

Material	Spec. No.	Formula
Cu	SB-75, SB-111	$t = D/70 + 0.03$ in.
Red Brass	SB-43, SB-111, SB-395	$t = D/60 + 0.03$ in.
Admiralty	SB-43, SB-395	$t = D/65 + 0.03$ in.
70–30 Cu–Ni	SB-111, SB-395	$t = D/75 + 0.03$ in.
80–20 Cu–Ni	SB-111, SB-395	$t = D/70 + 0.03$ in.
90–10 Cu–Ni	SB-111, SB-395	$t = D/65 + 0.03$ in.
Cu–Si	SB-315 Alloy 655	$t = D/65 + 0.03$ in.

(3) In no case shall the minimum thickness of tubes installed by welding be less than 0.061 in. There is no specified overriding minimum thickness requirement for tubes installed by brazing except that the thickness used must meet the brazing qualification requirements of Section IX, Part QB.

HG-320 OPENINGS IN BOILERS, GENERAL REQUIREMENTS[3,4]

HG-320.1 Shape of Openings.[5] Openings in cylindrical, spherical, or conical portions of boilers or in formed heads shall preferably be circular, elliptical, or obround[6] except as otherwise provided in HG-320.2. When the long dimension of an elliptical or obround opening exceeds twice the short dimension, the reinforcement across the short dimension shall be increased as necessary to provide against excessive distortion due to twisting moment.

[3] The rules governing openings as given in this Code are based on the stress intensification created by the existence of a hole in an otherwise symmetrical section. They are based on experience with vessels designed with a safety factor of five applied to the specified minimum tensile strength of the shell material. External loadings such as those due to thermal expansion or to unsupported weight of connecting piping have not been evaluated. These factors should be given attention in unusual designs or under conditions of cyclic loading.

[4] Typical examples of the application of these rules are given in Appendix D.

[5] The opening made by a pipe or a circular nozzle, the axis of which is not perpendicular to the boiler wall or head, may be considered an elliptical opening for design purposes.

[6] An obround opening is one which is formed by two parallel sides and semicircular ends.

RS-002840
1/17/02
NUECES

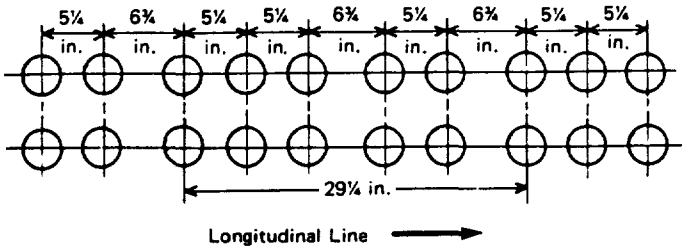

FIG. HG-350.3 EXAMPLE OF TUBE SPACING WITH PITCH OF HOLES VARYING IN EVERY SECOND AND THIRD ROW

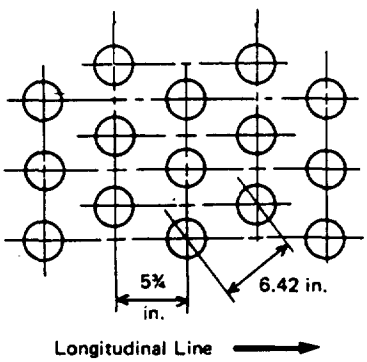

FIG. HG-350.4 EXAMPLE OF TUBE SPACING WITH TUBE HOLES ON DIAGONAL LINES

(b) The ligament efficiency of openings which are unequally spaced along diagonal lines shall be determined as in HG-350.1(c) except that Formula (3) shall be used in place of Formula (2).

HG-360 REQUIREMENTS FOR TUBE HOLES AND TUBE ATTACHMENTS

HG-360.1 Tube Holes and Ends

(a) Tube holes shall be drilled full size from the solid plate, or they may be punched $\frac{1}{2}$ in. smaller in diameter than full size when the plate thickness exceeds $\frac{3}{8}$ in. and $\frac{1}{8}$ in. smaller in diameter than full size when the plate thickness is $\frac{3}{8}$ in. or less, and then drilled, reamed, or finished full size with rotating cutters. Tube holes may be counterbored where the metal is thicker than that required to get a proper bearing by expanding, so as to form narrow seats into which the tube ends can properly expand, provided there is space available to permit a proper amount of flare of the tube end.

(b) The sharp edges of tube holes shall be taken off on both sides of the plate with a file or other tool.

HG-360.2 Requirements for Tube Attachment

(a) Ends of firetubes in contact with primary furnace gases may be expanded, expanded and flared, expanded and beaded, expanded and welded, or welded. Where attached by other than expanding and beading, the tubes shall extend beyond the tubesheet a distance not exceeding $\frac{1}{4}$ in. nor less than the tube thickness or $\frac{1}{8}$ in. whichever is greater. For tubes expanded and welded, or welded, the ends shall comply with HW-713.

(b) All firetube ends not in contact with primary furnace gases attached by other than expanding and beading shall extend beyond the tubesheet not less than the tube thickness or $\frac{1}{8}$ in., whichever is less, nor more than $\frac{3}{8}$ in.

(c) Watertubes may be attached by expanding, expanding and flaring, expanding and beading, expanding and welding, or welding. Where attached by other than expanding and beading, the tubes shall extend beyond the tubesheet a distance not less than $\frac{1}{4}$ in. nor more than $\frac{1}{2}$ in. Watertubes not exceeding 2 in. O.D. with welded tapered ferrules, when not expanded, expanded and flared, expanded and beaded, expanded and welded, or welded, may be attached mechanically. When such method of attachment is used, the tapered ferrule shall completely penetrate the head or drum and be mechanically clamped to the header or drum with bolting of no less than $\frac{3}{8}$ in. diameter, and the tubing shall not be used to support the pressure vessel.

(d) Where firetubes or watertubes are attached by welding, the tube holes may be drilled, flame cut, or

RS-002841
1/17/02
NUECES

punched. The tube holes may be punched full size provided the thickness of the tubesheet does not exceed $^5/_{16}$ in. The diameter of the tube hole in any case shall not be more than $^1/_{32}$ in. greater than the outside diameter of the tube. Where tubes are attached by fillet welding from one side only to a tubesheet exceeding $^5/_{16}$ in. thickness, the tubes shall be expanded before being welded. Tubes may be attached by welding as provided in HW-713.

(e) Watertubes in hot water boilers may be installed into headers with the use of O-ring seals in lieu of expanding, welding, or brazing, provided the following conditions are met.

(1) The watertube shall not exceed 2 in. outside diameter, nor 12 ft in length.

(2) The tube hole diameter shall be not more than $^1/_{32}$ in. larger than the outside diameter of the tube.

(3) The tube hole shall be recessed to accommodate the O-ring.

(4) The cross section of the O-ring shall have a diameter not less than $^1/_8$ in. nor greater than $^1/_4$ in.

(5) The outside diameter of the O-ring shall not be less than the outside diameter of the recessed groove.

(6) The inside diameter of the O-ring shall be at least $^1/_{32}$ in. smaller than the outside diameter of the tube.

(7) The O-ring material shall be ASTM D 2000 M3GE 705 A19 silicon.

(8) The O-ring shall be located or shielded from the combustion chamber in such a manner that the temperature of the O-ring shall not exceed 450°F.

(9) The headers shall be held together by stay rods adequately designed to carry the end loading and prevent the headers from spreading apart. The design stress of the stay rods shall not exceed that permitted in the appropriate stress table in Section IV.

(10) Means shall be provided to prevent the tubes from losing contact with the O-ring seal due to tube movement without loosening the stay rods.

TABLE HG-370
MINIMUM THICKNESS OF MATERIAL FOR THREADED CONNECTIONS TO BOILERS

Size of Pipe Connection, in.	Minimum Thickness of Material Required, in.
Under ¾	¼
¾ to 1, incl.	9/16
1¼ to 2½, incl.	11/16
3 to 3½, incl.	⅝
4 to 5, incl.	⅞
6 to 8, incl.	1
9 to 12, incl.	1¼

(11) If the tube length exceeds 6 ft, the tubes shall be supported at their midlength.

HG-370 EXTERNAL PIPING CONNECTIONS

HG-370.1 Threaded Connections. Pipe connections, if threaded, shall be tapped into material having a minimum thickness as specified in Table HG-370, except that when a curved surface is to be tapped the minimum thickness shall be sufficient to permit at least four full threads to be engaged.

HG-370.2 Flanged Connections

(a) It is recommended that dimensional requirements of bolted flange connections to external piping conform to ANSI B16.5, Steel Pipe Flanges and Flanged Fittings. Such flanges may be used for pressure–temperature ratings in accordance with the Standard.

(b) Steel flanges which do not conform to ANSI B16.5 shall be designed in accordance with the rules in Appendix II of Section VIII, Division 1, for the design pressure and temperature conditions. The outside diameter and bolting shall conform to a standard approved by ANSI.

RS-002842
1/17/02
NUECES

ARTICLE 4
PRESSURE RELIEVING DEVICES

HG-400 PRESSURE RELIEVING VALVE REQUIREMENTS

HG-400.1 Safety Valve Requirements for Steam Boilers

(a) Each steam boiler shall have one or more officially rated safety valves that are identified with the V or HV Symbol of the spring pop type adjusted and sealed to discharge at a pressure not to exceed 15 psi. Seals shall be attached in a manner to prevent the valve from being taken apart without breaking the seal. The safety valves shall be arranged so that they cannot be reset to relieve at a higher pressure than the maximum allowable working pressure of the boiler. Drain holes are not required for valves $\frac{3}{4}$ in. and smaller, when the seating surface of the valve is above the lowest portion of the inside diameter of the discharge piping. Means shall be provided for complete drainage of the discharge piping.

(b) No safety valve for a steam boiler shall be smaller than $\frac{1}{2}$ in. No safety valve shall be larger than $4\frac{1}{2}$ in. The inlet opening shall have an inside diameter equal to, or greater than, the seat diameter.

(c) The minimum relieving capacity of valve or valves shall be governed by the capacity marking on the boiler called for in HG-530.

(d) The minimum valve capacity in pounds per hour shall be the greater of that determined by dividing the maximum Btu output at the boiler nozzle obtained by the firing of any fuel for which the unit is installed by 1000, or shall be determined on the basis of the pounds of steam generated per hour per square foot of boiler heating surface as given in Table HG-400.1. For cast iron boilers constructed to the requirements of Part HC, the minimum valve capacity shall be determined by the maximum output method. In many cases a greater relieving capacity of valves will have to be provided than the minimum specified by these rules. In every case, the requirement of HG-400.1(e) shall be met.

TABLE HG-400.1
MINIMUM POUNDS OF STEAM PER HOUR PER SQUARE FOOT OF HEATING SURFACE

Boiler Heating Surface	Firetube Boilers	Watertube Boilers
Hand fired	5	6
Stoker fired	7	8
Oil, gas, or pulverized fuel fired	8	10
Waterwall heating surface:		
Hand fired	8	8
Stoker fired	10	12
Oil, gas, or pulverized fuel fired	14	16

GENERAL NOTES:
(a) When a boiler is fired only by a gas having a heat value not in excess of 200 Btu/cu ft, the minimum safety valves or safety relief valve relieving capacity may be based on the values given for hand fired boilers above.
(b) The minimum safety valve or safety relief valve relieving capacity for electric boilers shall be $3\frac{1}{2}$ lb/hr/kw input.
(c) For heating surface determination, see HG-403.

(e) The safety valve capacity for each steam boiler shall be such that with the fuel burning equipment installed, and operated at maximum capacity, the pressure cannot rise more than 5 psi above the maximum allowable working pressure.

(f) When operating conditions are changed, or additional boiler heating surface is installed, the valve capacity shall be increased, if necessary, to meet the new conditions and be in accordance with HG-400.1(e). The additional valves required, on account of changed conditions, may be installed on the outlet piping provided there is no intervening valve.

HG-400.2 Safety Relief Valve Requirements for Hot Water Boilers

(a) Each hot water heating or supply boiler shall have at least one officially rated safety relief valve, of the automatic reseating type, identified with the V or HV Symbol, and set to relieve at or below the maximum

RS-002843
1/17/02
NUECES

allowable working pressure of the boiler. Safety relief valves officially rated as to capacity shall have pop action when tested by steam. When more than one safety relief valve is used on either hot water heating or hot water supply boilers, the additional valve or valves shall be officially rated and may have a set pressure within a range not to exceed 6 psi above the maximum allowable working pressure of the boiler up to and including 60 psi, and 5% for those having a maximum allowable working pressure exceeding 60 psi. Safety relief valves shall be spring loaded. Safety relief valves shall be set and sealed so that they cannot be reset without breaking the seal.

(b) No materials liable to fail due to deterioration or vulcanization when subjected to saturated steam temperature corresponding to capacity test pressure shall be used for any part.

(c) No safety relief valve shall be smaller than $\frac{3}{4}$ in. nor larger than $4\frac{1}{2}$ in. standard pipe size except that boilers having a heat input not greater than 15,000 Btu/hr may be equipped with a rated safety relief valve of $\frac{1}{2}$ in. standard pipe size. The inlet opening shall have an inside diameter approximately equal to, or greater than, the seat diameter. In no case shall the minimum opening through any part of the valve be less than $\frac{1}{4}$ in. in diameter or its equivalent area.

(d) The required steam relieving capacity, in pounds per hour, of the pressure relieving device or devices on a boiler shall be the greater of that determined by dividing the maximum output in Btu at the boiler nozzle obtained by the firing of any fuel for which the unit is installed by 1000, or shall be determined on the basis of pounds of steam generated per hour per square foot of boiler heating surface as given in Table HG-400.1. For cast iron boilers constructed to the requirements of Part HC, the minimum valve capacity shall be determined by the maximum output method. In many cases a greater relieving capacity of valves will have to be provided than the minimum specified by these rules. In every case, the requirements of HG-400.2(f) shall be met.

(e) When operating conditions are changed, or additional boiler heating surface is installed, the valve capacity shall be increased, if necessary, to meet the new conditions and shall be in accordance with HG-400.2(f). The additional valves required, on account of changed conditions, may be installed on the outlet piping provided there is no intervening valve.

(f) Safety relief valve capacity for each boiler with a single safety relief valve shall be such that, with the fuel burning equipment installed and operated at maximum capacity, the pressure cannot rise more than 10% above the maximum allowable working pressure. When more than one safety relief valve is used, the overpressure shall be limited to 10% above the set pressure of the highest set valve allowed by HG-400.2(a).

HG-400.3 Safety and Safety Relief Valves for Tanks and Heat Exchangers

(a) Steam to Hot Water Supply. When a hot water supply is heated indirectly by steam in a coil or pipe within the service limitations set forth in HG-101, the pressure of the steam used shall not exceed the safe working pressure of the hot water tank, and a safety relief valve at least 1 in. in diameter, set to relieve at or below the maximum allowable working pressure of the tank, shall be applied on the tank.

(b) High Temperature Water to Water Heat Exchanger.[1] When high temperature water is circulated through the coils or tubes of a heat exchanger to warm water for space heating or hot water supply, within the service limitations set forth in HG-101, the heat exchanger shall be equipped with one or more officially rated safety relief valves that are identified with the V or HV Symbol, set to relieve at or below the maximum allowable working pressure of the heat exchanger, and of sufficient rated capacity to prevent the heat exchanger pressure from rising more than 10% above the maximum allowable working pressure of the vessel.

(c) High Temperature Water to Steam Heat Exchanger.[1] When high temperature water is circulated through the coils or tubes of a heat exchanger to generate low pressure steam, within the service limitations set forth in HG-101, the heat exchanger shall be equipped with one or more officially rated safety valves that are identified with the V or HV Symbol, set to relieve at a pressure not to exceed 15 psi, and of sufficient rated capacity to prevent the heat exchanger pressure from rising more than 5 psi above the maximum allowable working pressure of the vessel. For heat exchangers requiring steam pressures greater than 15 psi, refer to Section I or Section VIII, Division 1.

HG-401 MINIMUM REQUIREMENTS FOR SAFETY AND SAFETY RELIEF VALVES

HG-401.1 Mechanical Requirements

(a) Bottom guided designs are not permitted on hot water valves.

(b) Synthetic disk inserts of O-ring or other types if used shall be compatible with the maximum design temperature established for the valve.

[1] Suggested installation practices for the secondary side of heat exchangers.

RS-002844
1/17/02
NUECES

Data Report may be used to include the serial numbers in uninterrupted sequence of identical boilers completed, inspected, and stamped in a continuous 8 hr period. Form H-2 or H-3 shall be used.

(a) The boiler Manufacturer shall have the responsibility of furnishing a copy of the completed Manufacturer's Data Report at the place of installation to the inspection agency, the purchaser, and the state, municipal, or provincial authority.

(b) The Manufacturer shall either keep a copy of the Manufacturer's Data Report on file for at least 5 years, or the boiler may be registered and the original Data Report filed with the National Board of Boiler and Pressure Vessel Inspectors, 1055 Crupper Avenue, Columbus, Ohio 43229.

HG-520.2 Partial Data Reports

(a) Manufacturer's Partial Data Reports for those parts of a boiler requiring inspection under this Code, which are furnished by other than the shop of the manufacturer responsible for the completed boiler, shall be executed by the parts manufacturer and shall be forwarded in duplicate to the manufacturer of the finished boiler.

(b) Partial Data Reports (Form H-4) shall be completed for all parts that require inspection under this Code which are fabricated by a manufacturer other than the manufacturer of the completed boiler. These Partial Data Reports, together with his own inspection, shall be the final Authorized Inspector's authority to witness the application of the Code Symbol to the completed boiler.

HG-530 STAMPING OF BOILERS

HG-530.1 Stamping Requirements for Boilers Other Than Those Constructed Primarily of Cast Iron (See HG-530.2)

(a) All boilers to which the Code Symbol is to be applied shall be built according to the rules of this Section by a manufacturer who is in possession of a Code Symbol Stamp and a valid Certificate of Authorization. Each boiler shall be stamped with the Code Symbol shown in Fig. HG-530.1 and with the following data:

(1) the boiler manufacturer's name, preceded by the words "Certified by;"

(2) maximum allowable working pressure;

(3) safety or safety relief valve capacity (minimum), lb/hr or MBH, as determined according to HG-400.1(d) and HG-400.2(d);

(4) heating surface, sq ft, as determined according to HG-403 (or kilowatt power input for electric boilers);



FIG. HG-530.1 OFFICIAL SYMBOL FOR STAMP TO DENOTE THE AMERICAN SOCIETY OF MECHANICAL ENGINEERS' STANDARD

(5) manufacturer's serial number;

(6) year built;

(7) maximum water temperature. A95

NOTE: The year built may be incorporated into the serial number as a prefix consisting of the last two digits of the year.

(b) Items (1) through (7) listed in (a) above, with the markings arranged substantially as shown in Fig. HG-530.2 or Fig. HG-530.3, shall be stamped with letters at least $^5/_{16}$ in. high and in some conspicuous place on the boiler proper or on a nameplate at least $^3/_{64}$ in. thick permanently fastened to the boiler proper. The location of the stamping shall be as follows: A95

(1) Horizontal Tubular Flue Type Boilers: on the front head above the central rows of tubes or flues.

(2) Locomotive Firebox, Compact, or Vertical Firetube Type Boilers: over or near the fire door or handhole or washout plug opening on the front end or side.

(3) Watertube Type Boilers: on a head of the top outlet drum. Waterwalls and headers shall carry identifying markings.

(4) Split-Section and Section Firebox Type Wrought Boilers: over or near the fire door or handhole or washout plug opening on the front end or side. Each section shall carry identifying markings.

(5) Scotch Type Boilers: on either side of the shell near the normal water level line adjacent to the front tubesheet.

(c) On any of the above type boilers where there is not sufficient space in the places designated and on other types and new designs of boilers, the nameplate shall be located in a conspicuous place.

(d) The stamping or nameplate on the boiler proper shall not be covered with insulating or other material unless:

(1) the required markings are duplicated and stamped directly on the boiler casing in some conspicuous place using letters and numerals at least $^5/_{16}$ in. high;

(2) an opening with a removable cover is provided in the jacket or other form of casing so that, when

RS-002845
1/17/02
NUECES

FORM OF STAMPING ON COMPLETED BOILERS OR THEIR NAMEPLATES
(Not Applicable for Boilers Constructed Primarily of Cast Iron)

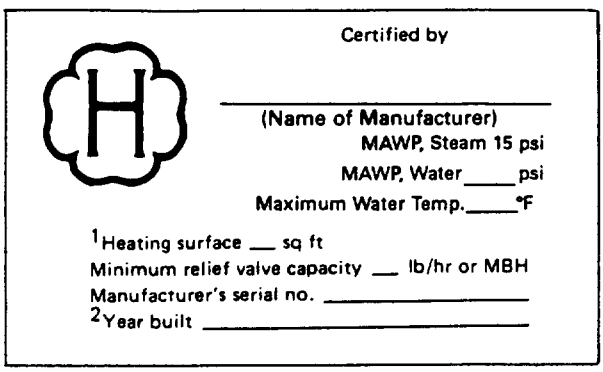

FIG. HG-530.2 STEAM AND WATER BOILERS

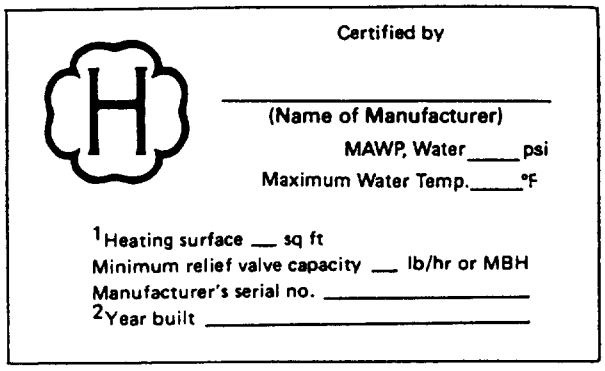

FIG. HG-530.3 BOILERS SUITABLE FOR WATER ONLY

NOTES:
Acceptable abbreviations to any of the stamp wording may be used.
(1) Kilowatt power input for electric boilers.
(2) May be omitted when year built is prefix to serial number (see HG-530.1).

removed, the stamping or nameplate on the boiler proper can be viewed;

(3) the required data are duplicated by stamping or marking with letters at least $\frac{1}{8}$ in. high on a nonferrous nameplate at least 3 in. × 4 in. size and permanently attaching the nameplate to the casing in some conspicuous place by mechanical means or by an adhesive system meeting the requirements of Appendix J.

(e) The Code Symbol may be preapplied to a nameplate. The nameplate may be attached to the boiler after the final fabrication and examination sequence but before the hydrostatic test, provided the procedure for sequence of stamping is described in the manufacturer's accepted quality control system. The Code Symbol and manufacturer's serial number shall be stamped on nameplates but the other data may be stamped, etched, cast, or impressed thereon.

(f) The ASME Code Symbol Stamp(s) shall not be used by an organization to which it was not issued.

HG-530.2 Marking Requirements for Cast Iron Boilers

(a) All boiler parts or sections to which the Code Symbol is to be applied shall be built according to the rules of this Section by a manufacturer[1] who is in possession of a Code Symbol Stamp and a valid Certificate of Authorization. Each boiler section, including end and intermediate cored sections, shall be cast with the Code Symbol shown in Fig. HG-530.1 and with the following data cast in letters or numerals at least $\frac{5}{16}$ in. high:

(1) the boiler or parts manufacturer's[1] name or acceptable abbreviation, preceded by the words "Certified by:" (or "Cert. by" on cast iron boiler sections only where space for marking is limited; the abbreviation "Cert. by" shall not be used on nameplates);

(2) maximum allowable working pressure[2]

(3) pattern number;

(4) casting date;

(5)[3] the shop assembler's[4] name or acceptable abbreviation (if different from manufacturer).

Arrangement of data cast on sections shall be substantially as shown in Fig. HG-530.4 or Fig. HG-530.5.

Other data may be cast on the sections. The marking "ASME" or "ASME standard" shall not be used.

(b) When the boiler size and number of sections have been decided, the completed boiler shall be marked

[1] The foundry which casts the boiler parts or sections and which may shop assemble.

[2] May be stamped.

[3] Optional.

[4] The shop which assembles sections into boilers and which is in possession of a Code Symbol Stamp and valid Certificate of Authorization.

RS-002848
1/17/02
NUECES

HG-533.3 Field Inspection by Authorized Inspector. The field inspection shall be made by an Authorized Inspector (as defined in HG-515.3) and the Inspector shall make such inspections as he believes are needed to enable him to certify that the boiler has been constructed in accordance with the Code. Properly executed Manufacturer's Data Reports, together with the Inspector's own inspection, shall constitute his authority to sign the certificate of field inspection.

HG-533.4 Application of Assembler's Stamp. The Assembler's H Stamp, together with the assembler's name or an acceptable abbreviation, shall be applied in the field on the boiler near the stamping called for in HG-530.2, when the assembly is accepted by the Authorized Inspector.

HG-533.5 Application for H Symbol. Applicants for an H Symbol to be used only in the field assembly of heating boilers shall so state on the application form, and the Certificate of Authorization issued to such applicants shall show that the authorization to use the H Symbol is limited to the field assembly of welded boilers constructed to Section IV (see HG-540).

HG-533.6 Certificate of Field Inspection. The certificate of field inspection on the Data Report shall be executed by the Authorized Inspector. The assembler or assembling organization shall have the responsibility for forwarding and filing of Manufacturer's Data Reports as required by HG-520.1(a) and HG-520.1(b).

HG-540 CODE SYMBOL STAMPS

HG-540.1 Authorization. A Certificate of Authorization to use the Code Symbols H, HLW, and/or HV will be granted by the Society pursuant to the provisions of the following paragraphs. Stamps for applying the Code Symbol shall be obtained from the Society.

HG-540.2 Application for Certificate of Authorization

(a) Any organization desiring a Certificate of Authorization shall apply to the Boiler and Pressure Vessel Committee of the Society, on forms issued by the Society,[5] specifying the Stamp desired and the scope of Code activities to be performed. When an organization intends to build Code items in plants in more than one geographical area, either separate applications for each plant or a single application listing the addresses of all such plants may be submitted. Each application shall identify the Authorized Inspection Agency providing Code inspection at each plant. A separate Certificate of Authorization will be prepared and a separate fee charged by the Society for each plant.

Each applicant must agree that each Certificate of Authorization and each Code Symbol Stamp are at all times the property of the Society, that they will be used according to the rules and regulations of this Section of the Code, and that they will be promptly returned to the Society upon demand, or when the applicant discontinues the Code activities covered by his Certificate, or when the Certificate of Authorization has expired and no new Certificate has been issued. The holder of a Code Symbol Stamp shall not allow any other organization to use it.

(b) Issuance of Authorization. Authorization to use Code Symbol Stamps may be granted or withheld by the Society in its absolute discretion. If authorization is granted, and the proper administrative fee paid, a Certificate of Authorization evidencing permission to use any such Symbol, expiring on the triennial anniversary date thereafter, will be forwarded to the applicant. Each such certificate will identify the Code Symbol to be used, and the type of shop and/or field operations for which authorization is granted (see Appendix K). The Certificate will be signed by the Chairman of the Boiler and Pressure Vessel Committee and the Director of Accreditation.

(c) Six months prior to the date of expiration of any such Certificate, the applicant must apply for a renewal of such authorization and the issuance of a new Certificate. The Society reserves the absolute right to cancel or refuse to renew such authorization, returning, pro rata, fees paid for the unexpired term.

The Certificate of Authorization for the use of the H, HLW, and/or HV Code Symbol Stamp is valid for 3 years; the H (cast iron) Certificate of Authorization for the H (cast iron) Code Symbol Stamp is valid for one year.

HG-540.3 Inspection Agreement. As a condition of obtaining and maintaining a Certificate of Authorization to use the H or HLW Code Symbol Stamps, the Manufacturer (except for cast iron heating boilers) must have in force at all times an inspection contract or agreement with an Authorized Inspection Agency as defined in HG-515.3 to provide inspection services. This inspection agreement is a written agreement between the Manufacturer and the Inspection Agency which specifies the terms and conditions under which the inspection services are to be furnished and which states the mutual responsibilities of the Manufacturer and the Authorized Inspectors. A Certificate Holder shall notify the Society

[5] The application forms and related information and instructions may be obtained by writing to the Secretary, ASME Boiler and Pressure Vessel Committee, 345 East 47th Street, New York, N.Y. 10017.

RS-002847
1/17/02
NUECES

whenever his agreement with an Authorized Inspection Agency is cancelled or changed to another Authorized Inspection Agency. Neither Manufacturers nor Assemblers of pressure relief valves are required to have an inspection agreement with an Authorized Inspection Agency.

A Certificate of Authorization may be granted to a Manufacturer or Assembler of safety valves to use the safety valve Symbol Stamp providing such stamp is applied only to safety valves that have been capacity certified in accordance with the requirements of this Section.

HG-540.4 Quality Control System. Any Manufacturer or Assembler holding or applying for a Certificate of Authorization to use the H, HLW, or HV Stamp shall have, and demonstrate, a quality control system to establish that all Code requirements, including material, design, fabrication, examination (by the Manufacturer), inspection of boilers, vessels, parts (by the Authorized Inspector), pressure testing, and certification will be met. The quality control system shall be in accordance with the requirements of Appendix F, except for Cast Iron Boiler Certificate Holders. It must be in accordance with the requirements of Article 5 of Part HC.

HG-540.5 Evaluation for Authorization and Reauthorization. Before issuance or triennial renewal of a Certificate of Authorization for use of the H or HLW Stamp, the Manufacturer's facilities and organization are subject to a joint review by his Inspection Agency and the legal jurisdiction concerned, except that for H (cast iron) the review shall be yearly by an ASME Designee. In either case the individual shall meet the ASME criteria. A written description or checklist of the quality control system which identifies what documents and what procedures the Manufacturer will use to produce a Code item shall be available for review.

The purpose of the review is to evaluate the applicant's quality control system and its implementation. The applicant shall demonstrate sufficient administrative and fabrication functions of the system to show that he has the knowledge and ability to produce the Code items covered by his quality control system. Fabrication functions may be demonstrated using current work, a mock-up, or a combination of the two.

A written report to the Society shall be made jointly by the jurisdiction and the Inspection Agency employed by the Manufacturer to do his Code inspection. This report is then reviewed by the Subcommittee on Boiler and Pressure Vessel Accreditation, which will either issue a Certificate of Authorization or notify the applicant of deficiencies revealed by the review. In such a case, the applicant will be given an opportunity to explain or correct these deficiencies.

Certificates of Authorization will be endorsed to indicate the scope of activity authorized. Authorization may include field operations if the review team determines that these operations are adequately described in the quality control manual, and this determination is accepted by the Society.

Before issuance or renewal of a Certificate of Authorization for use of the H (cast iron) Stamp to produce cast iron boilers, each Manufacturer (the foundry who casts the boiler parts or sections and who may shop assemble) or Assember is subject to review by an ASME designee. A written description or checklist of the quality control system in accordance with the requirements of Part HC shall be available for review. The ASME designee shall make a written report to the Society, where the Subcommittee on Boiler and Pressure Vessel Accreditation will act on it as described above.

HG-540.6 Authorization of Changes. The Manufacturer may at any time make changes in the quality control system concerning the methods of achieving results, subject to acceptance by the Authorized Inspector. For Manufacturers of multiple duplicate pressure vessels,[6] acceptance of these changes by the jurisdiction (if applicable) and an ASME designee is also required. For Manufacturers and Assemblers of HV stamped safety and safety relief valves, such acceptance shall be by the ASME designee.

For those areas where there is no jurisdiction or where a jurisdiction does not review a Manufacturer's facility, that function shall be performed by an ASME designee. Where the jurisdiction is the Manufacturer's Inspection Agency, the joint review and joint report shall be made by the jurisdiction and another representative designated by the Society.

HG-540.7 Code Construction Before Receipt of Certificate of Authorization. When used to demonstrate his quality control system, a Manufacturer may start fabricating Code items before receipt of a Certificate of Authorization to use a Code Symbol Stamp under the following conditions.

(a) The fabrication is done with the participation of the Authorized Inspector and is subject to his acceptance.

(b) The activity is in conformance with the applicant's quality control system.

[6] See HG-515.4 for additional requirements applicable to multiple, duplicate pressure vessel fabrication.

RS-002848
1/17/02
NUECES

(c) The item is stamped with the appropriate Code Symbol and certified once the applicant receives his Certificate of Authorization from the Society.

HG-540.8 Regulations on Use of Code Symbol Stamps. The Boiler and Pressure Vessel Committee may at any time make such regulations concerning the issuance and use of Code Symbol Stamps as it deems appropriate, and all such regulations shall become binding upon the holders of any valid Certificates of Authorization.

RS-002849
1/17/02
NUECES

ARTICLE 6
INSTRUMENTS, FITTINGS, AND CONTROLS

HG-600 GENERAL

All instruments, fittings, and controls described in this Article shall be installed prior to operation.

HG-601 FOR STEAM HEATING BOILERS

HG-602 STEAM GAGES

(a) Each steam boiler shall have a steam gage or a compound steam gage connected to its steam space or to its water column or to its steam connection. The gage or connection shall contain a siphon or equivalent device which will develop and maintain a water seal that will prevent steam from entering the gage tube. The connection shall be so arranged that the gage cannot be shut off from the boiler except by a cock placed in the pipe at the gage and provided with a tee- or lever-handle arranged to be parallel to the pipe in which it is located when the cock is open. The connections to the boiler shall be not less than NPS ¼, but where steel or wrought iron pipe or tubing is used, they shall be not less than NPS ½. The minimum size of a siphon, if used, shall be ¼ in. I.D. Ferrous and nonferrous tubing having inside diameters at least equal to that of standard pipe sizes listed above may be substituted for pipe.

(b) The scale on the dial of a steam boiler gage shall be graduated to not less than 30 psi nor more than 60 psi. The travel of the pointer from 0 psi to 30 psi pressure shall be at least 3 in.

HG-603 WATER GAGE GLASSES

(a) Each steam boiler shall have one or more water gage glasses attached to the water column or boiler by means of valved fittings not less than NPS ½, with the lower fitting provided with a drain valve of a type having an unrestricted drain opening not less than ¼ in. in diameter to facilitate cleaning. Gage glass replacement shall be possible under pressure. Water glass fittings may be attached directly to a boiler.

Boilers having an internal vertical height of less than 10 in. may be equipped with a water level indicator of the Glass Bull's-Eye type provided the indicator is of sufficient size to show the water at both normal operating and low-water cutoff levels.

(b) The lowest visible part of the water gage glass shall be at least 1 in. above the lowest permissible water level recommended by the boiler Manufacturer. With the boiler operating at this lowest permissible water level, there shall be no danger of overheating any part of the boiler.

Each boiler shall be provided at the time of the manufacture with a permanent marker indicating the lowest permissible water level. The marker shall be stamped, etched, or cast in metal; or it shall be a metallic plate attached by rivets, screws, or welding; or it shall consist of material with documented tests showing its suitability as a permanent marking for the application. This marker shall be visible at all times. Where the boiler is shipped with a jacket, this marker may be located on the jacket.

NOTE: Transparent material other than glass may be used for the water gage provided that the material will remain transparent and has proved suitable for the pressure, temperature, and corrosive conditions expected in service.

(c) In electric boilers of the submerged electrode type, the water gage glass shall be so located to indicate the water levels both at startup and under maximum steam load conditions as established by the manufacturer.

(d) In electric boilers of the resistance element type, the lowest visible part of the water gage shall be located at least 1 in. above the lowest permissible water level specified by the Manufacturer. Each electric boiler of this type shall also be equipped with an automatic low-water cutoff on each boiler pressure vessel so located as to automatically cut off the power supply

RS-002850
1/17/02
NUECES

to the heating elements before the surface of the water falls below the visible part of the glass.

(e) Tubular water glasses on electric boilers having a normal water content not exceeding 100 gal shall be equipped with a protective shield.

HG-604 WATER COLUMN AND WATER LEVEL CONTROL PIPES

(a) The minimum size of ferrous or nonferrous pipes connecting a water column to a steam boiler shall be 1 in. No outlet connections, except for damper regulator, feedwater regulator, steam gages, or apparatus which does not permit the escape of any steam or water except for manually operated blowdowns, shall be attached to a water column or the piping connecting a water column to a boiler (see HG-705 for introduction of feedwater into a boiler). If the water column, gage glass, low-water fuel cutoff, or other water level control device is connected to the boiler by pipe and fittings, no shutoff valves of any type shall be placed in such pipe, and a cross or equivalent fitting to which a drain valve and piping may be attached shall be placed in the water piping connection at every right angle turn to facilitate cleaning. The water column drain pipe and valve shall be not less than NPS $3/4$.

(b) The steam connections to the water column of a horizontal firetube wrought boiler shall be taken from the top of the shell or the upper part of the head, and the water connection shall be taken from a point not above the center line of the shell. For a cast iron boiler, the steam connection to the water column shall be taken from the top of an end section or the top of the steam header, and the water connection shall be made on an end section not less than 6 in. below the bottom connection to the water gage glass.

HG-605 PRESSURE CONTROL

Each automatically fired steam boiler shall be protected from overpressure by two pressure-operated controls.

(a) Each individual automatically fired steam boiler shall have a safety limit control that will cut off the fuel supply to prevent steam pressure from exceeding the 15 psi maximum allowable working pressure of the boiler. Each control shall be constructed to prevent a pressure setting above 15 psi.

(b) Each individual steam boiler or each system of commonly connected steam boilers shall have a control that will cut off the fuel supply when the pressure reaches an operating limit, which shall be less than the maximum allowable pressure.

(c) Shutoff valves of any type shall not be placed in the steam pressure connection between the boiler and the controls described in (a) and (b) above. These controls shall be protected with a syphon or equivalent means of maintaining a water seal that will prevent steam from entering the control. The connections to the boiler shall not be less than NPS $1/4$, but where steel or wrought iron pipe or tubing is used, they shall not be less than NPS $1/2$. The minimum size of a syphon shall be NPS $1/4$ or $3/8$ in. O.D. nonferrous tubing.

HG-606 AUTOMATIC LOW-WATER FUEL CUTOFF AND/OR WATER FEEDING DEVICE

(a) Each automatically fired steam or vapor-system boiler shall have an automatic low-water fuel cutoff so located as to automatically cut off the fuel supply when the surface of the water falls to the lowest visible part of the water gage glass. If a water feeding device is installed, it shall be so constructed that the water inlet valve cannot feed water into the boiler through the float chamber and so located as to supply requisite feedwater.

(b) Such a fuel cutoff or water feeding device may be attached directly to a boiler. A fuel cutoff or water feeding device may also be installed in the tapped openings available for attaching a water glass direct to a boiler, provided the connections are made to the boiler with nonferrous tees or Y's not less than NPS $1/2$ between the boiler and the water glass so that the water glass is attached directly and as close as possible to the boiler; the run of the tee or Y shall take the water glass fittings, and the side outlet or branch of the tee or Y shall take the fuel cutoff or water feeding device. The ends of all nipples shall be reamed to full-size diameter.

(c) Fuel cutoffs and water feeding devices embodying a separate chamber shall have a vertical drain pipe and a blowoff valve not less than NPS $3/4$, located at the lowest point in the water equalizing pipe connections so that the chamber and the equalizing pipe can be flushed and the device tested.

HG-607 MODULAR STEAM HEATING BOILERS

(a) Each module of a modular steam heating boiler shall be equipped with:

R8-002861
1/17/02
NUECES

(1) steam gage, see HG-602
(2) water gage glass, see HG-603
(3) pressure control, see HG-605(a)
(4) low water cutoff, see HG-606

(b) The assembled modular steam boiler shall also be equipped with pressure control, see HG-605(b).

HG-610 FOR HOT WATER HEATING OR HOT WATER SUPPLY BOILERS

HG-611 PRESSURE OR ALTITUDE GAGES

(a) Each hot water heating or hot water supply boiler shall have a pressure or altitude gage connected to it or to its flow connection in such a manner that it cannot be shut off from the boiler except by a cock with tee or lever handle, placed on the pipe near the gage. The handle of the cock shall be parallel to the pipe in which it is located when the cock is open.

(b) The scale on the dial of the pressure or altitude gage shall be graduated approximately to not less than 1½ nor more than three times the pressure at which the safety relief valve is set.

(c) Piping or tubing for pressure- or altitude-gage connections shall be of nonferrous metal when smaller than NPS 1.

A95 HG-612 THERMOMETERS

Each hot water heating or hot water supply boiler shall have a thermometer so located and connected that it shall be easily readable. The thermometer shall be so located that it shall at all times indicate the temperature of the water in the boiler at or near the outlet.

HG-613 TEMPERATURE CONTROL

Each automatically fired hot water heating or hot water supply boiler shall be protected from over-temperature by two temperature-operated controls.

(a) Each individual automatically fired hot water heating or hot water supply boiler shall have a safety limit control that will cut off the fuel supply to prevent water temperature from exceeding the maximum allowable temperature of 250°F at the boiler outlet. This water temperature safety control shall be constructed to prevent a temperature setting above 250°F.

(b) Each individual hot water heating or hot water supply boiler or each system of commonly connected boilers without intervening valves shall have a control that will cut off the fuel supply when the water temperature reaches an operating limit, which shall be less than the maximum allowable temperature.

HG-614 LOW-WATER FUEL CUTOFF

(a) Each automatically fired hot water boiler with heat input greater than 400,000 Btu/hr shall have an automatic low-water fuel cutoff which has been designed for hot water service, and it shall be so located as to automatically cut off the fuel supply when the surface of the water falls to the level established in (b) below (see Fig. HG-703.2).

(b) As there is no normal waterline to be maintained in a hot water boiler, any location of the low-water fuel cutoff above the lowest safe permissible water level established by the boiler manufacturer is satisfactory.

(c) A coil-type boiler or a watertube boiler with heat input greater than 400,000 Btu/hr requiring forced circulation to prevent overheating of the coils or tubes shall have a flow-sensing device installed in lieu of the low-water fuel cutoff required in (a) above to automatically cut off the fuel supply when the circulating flow is interrupted.

HG-615 MODULAR HOT WATER HEATING BOILERS

(a) Each module of a modular hot water heating boiler shall be equipped with:
(1) pressure/altitude gage, see HG-611
(2) thermometer, see HG-612
(3) temperature control, see HG-613(a)

(b) The assembled modular hot water heating boiler shall also be equipped with:
(1) temperature control, see HG-613(b)
(2) low water fuel cutoff, see HG-614

HG-620 FOR ALL BOILERS

HG-621 INSTRUMENTS, FITTINGS, AND CONTROLS MOUNTED INSIDE BOILER JACKETS

Any or all instruments, fittings, and controls required by these rules may be installed inside of boiler jackets provided the water gage on a steam boiler is accessible without the use of tools and provided the water gage and pressure gage on a steam boiler or the thermometer and pressure gage on a water boiler are visible through an opening or openings at all times.

RS-002852
1/17/02
NUECES

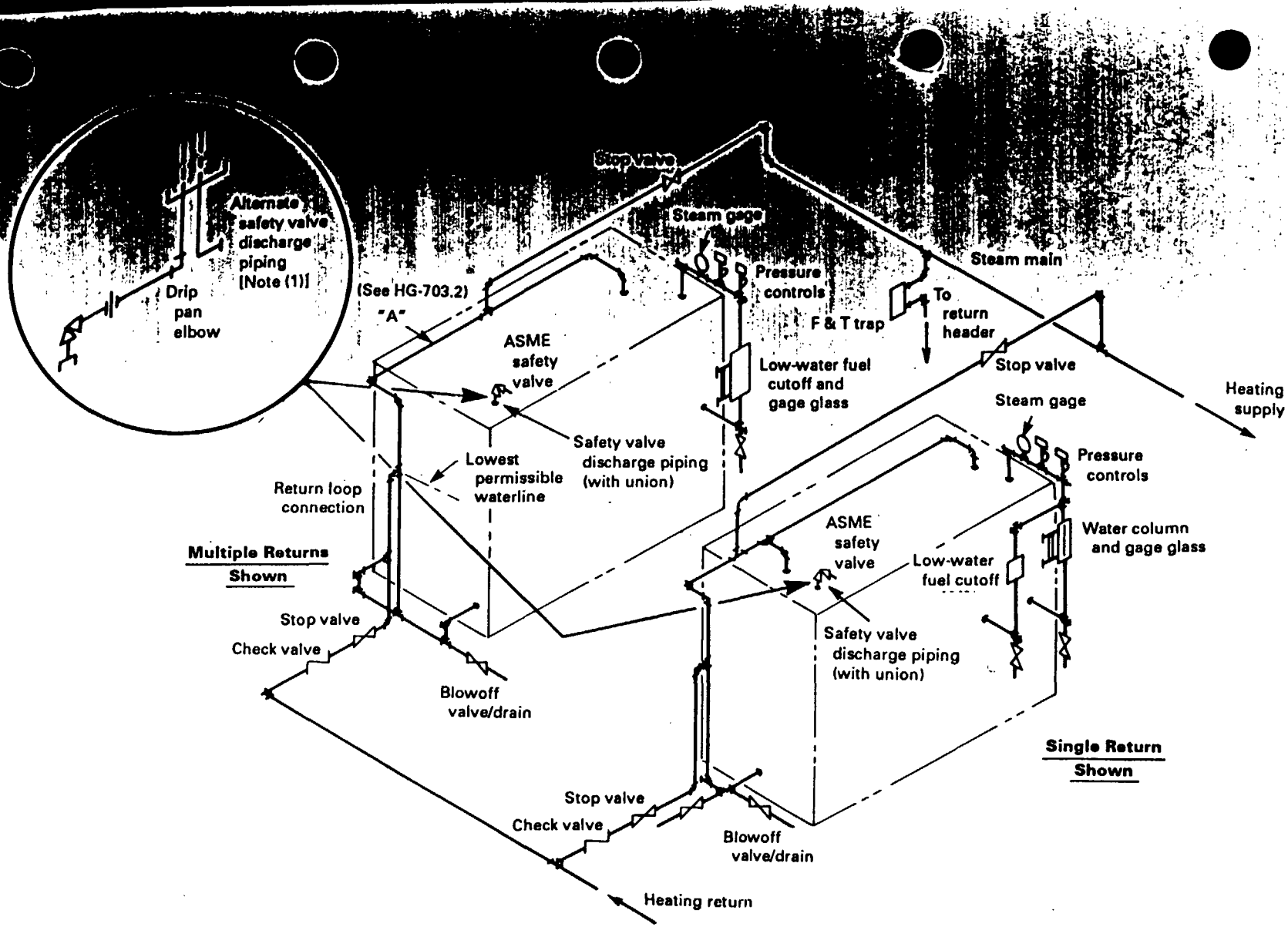

GENERAL NOTE:
Return connections shown for a multiple boiler installation may not always insure that the system will operate properly. In order to maintain proper water levels in multiple boiler installations, it may be necessary to install supplementary controls or suitable devices.

NOTE:
(1) Recommended for 1 in. and larger safety valve discharge.

FIG. HG-703.1(b) STEAM BOILERS IN BATTERY — GRAVITY RETURN —ACCEPTABLE PIPING INSTALLATION

Fig. HG-703.1(b)

RS-002853
1/17/02
NUECES

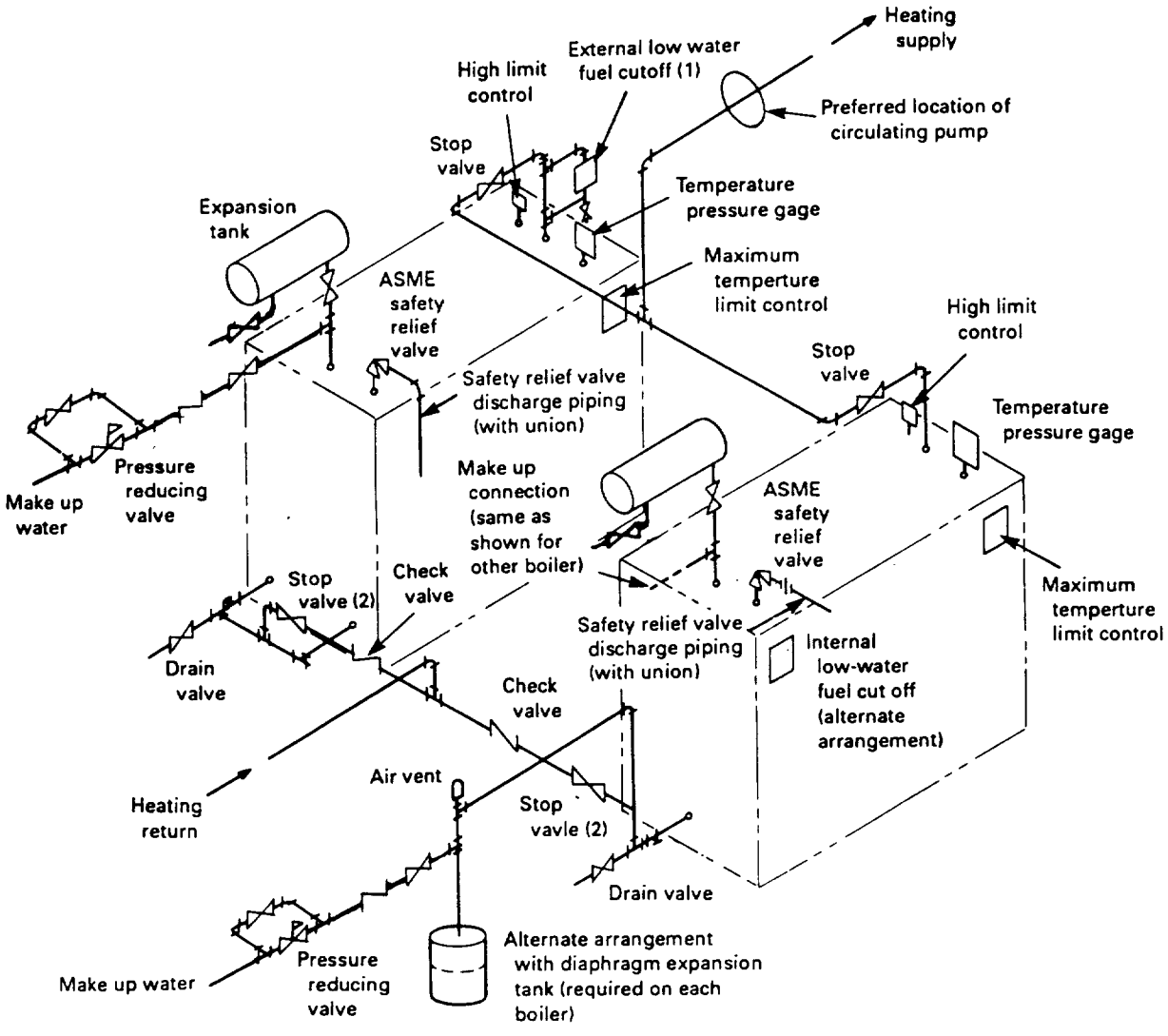

NOTES:
(1) Recommended control. See HG-614. Acceptable shutoff valves or cocks in the connecting piping may be installed for convenience of control testing and/or service.
(2) The common return header stop valves may be located on either side of the check valves.

FIG. HG-703.2 HOT WATER BOILERS IN BATTERY — ACCEPTABLE PIPING INSTALLATION

RS-002864
1/17/02
NUECES

TABLE HG-709.1
EXPANSION TANK CAPACITIES FOR GRAVITY HOT WATER SYSTEMS
Based on two-pipe system with average operating water temperature 170°F, using cast iron column radiation with heat emission rate 150 Btu/hr sq ft equivalent direction radiation

Installed Equivalent Direct Radiation, sq ft [Note (1)]	Tank Capacity, gal
Up to 350	18
Up to 450	21
Up to 650	24
Up to 900	30
Up to 1100	35
Up to 1400	40
Up to 1600	2–30
Up to 1800	2–30
Up to 2000	2–35
Up to 2400	2–40

NOTE:
(1) For systems with more than 2400 sq ft of installed equivalent direct water radiation, the required capacity of the cushion tank shall be increased on the basis of 1 gal tank capacity/33 sq ft of additional equivalent direct radiation.

TABLE HG-709.2
EXPANSION TANK CAPACITIES FOR FORCED HOT WATER SYSTEMS[1]
Based on average operating water temperature 195°F, fill pressure 12 psig, and maximum operating pressure 30 psig

System Volume, gal	Tank Capacities, gal	
	Prepressurized Diaphragm Type	Nonpressurized Type
100	9	15
200	17	30
300	25	45
400	33	60
500	42	75
1000	83	150
2000	165	300

NOTE:
(1) System volume includes volume of water in boiler, radiation, and piping, not including the expansion tank. Expansion tank capacities are based on an acceptance factor of 0.4027 for prepressurized types and 0.222 for nonprepressurized types. A procedure for estimating system volume and determining expansion tank sizes for other design conditions may be found in Chapter 13 of the 1987 Systems and Applications Volume of the ASHRAE Handbook.

HG-709.2 or from the following formula where the necessary information is available:

$$V_t = [(0.00041T - 0.0466)V_s]/[(P_a/P_f) - (P_a/P_o)]$$

where

V_t = minimum volume of tanks, gal
V_s = voltage of system, not including tanks, gal
T = average operating temperature, °F
P_a = atmospheric pressure, psia
P_f = fill pressure, psia
P_o = maximum operating pressure, psia

HG-709.3 Hot Water Supply Systems. If a system is equipped with a check valve or pressure reducing valve in the cold water inlet line, consideration should be given to the installation of an airtight expansion tank or other suitable air cushion. Otherwise, due to the thermal expansion of the water, the safety relief valve may lift periodically. If an expansion tank is provided, it shall be constructed in accordance with Section VIII, Division 1. Except for prepressurized tanks, which should be installed on the cold water side, provisions shall be made for draining the tank without emptying the system. See Fig. HLW-809.1 for typical acceptable installation.

HG-710 STOP VALVES

HG-710.1 For Single Steam Boilers. When a stop valve is used in the supply pipe connection of a single steam boiler, there shall be one used in the return pipe connection.

HG-710.2 For Single Hot Water Heating Boilers

(a) Stop valves shall be located at an accessible point in the supply and return pipe connections as near the boiler nozzle as is convenient and practicable, of a single hot water heating boiler installation to permit draining the boiler without emptying the system.

(b) When the boiler is located above the system and can be drained without draining the system, stop valves may be eliminated.

HG-710.3 For Multiple Boiler Installations. A stop valve shall be used in each supply and return pipe connection of two or more boilers connected to a common system. See Figs. HG-703.1 and HG-703.2.

HG-710.4 Type of Stop Valve(s)

(a) All valves or cocks shall conform with the applicable portions of HF-203 and may be ferrous or nonferrous.

(b) The minimum pressure rating of all valves or cocks shall be at least equal to the pressure stamped upon the boiler, and the temperature rating of such

RS-002855
1/17/02
NUECES

valves or cocks, including all internal components, shall be not less than 250°F.

(c) Valves or cocks shall be flanged, threaded or have ends suitable for welding or brazing.

(d) All valves or cocks with stems or spindles shall have adjustable pressure type packing glands and, in addition, all plug type cocks shall be equipped with a guard or gland. The plug or other operating mechanism shall be distinctly marked in line with the passage to indicate whether it is opened or closed.

(e) All valves or cocks shall have tight closure when under boiler hydrostatic test pressure.

HG-710.5 Identification of Stop Valves by Tags. When stop valves are used, they shall be properly designated substantially as follows by tags of metal or other durable material fastened to them:

Supply Valve – Number ( )

Do Not Close Without Also Closing Return Valve – Number ( )

Return Valve – Number ( )

Do Not Close Without Also Closing Supply Valve – Number ( )

HG-715 BOTTOM BLOWOFF AND DRAIN VALVES

(a) Bottom Blowoff Valve. Each steam boiler shall have a bottom blowoff connection fitted with a valve or cock connected to the lowest water space practicable with a minimum size as shown in Table HG-715. The discharge piping shall be full size to the point of discharge.

(b) Boilers having a capacity of 25 gal or less are exempt from the above requirements, except that they must have a $\frac{3}{4}$ in. NPS minimum drain valve.

(c) Drain Valve. Each steam or hot water boiler shall have one or more drain connections, fitted with valves or cocks connecting to the lowest water containing spaces. The minimum size of the drain piping, valves, and cocks shall be $\frac{3}{4}$ in. The discharge piping shall be full size to the point of discharge. When the blowoff connection is located at the lowest water containing space, a separate drain connection is not required.

(d) Minimum Pressure Rating. The minimum pressure rating of valves and cocks used for blowoff or drain purposes shall be at least equal to the pressure stamped on the boiler but in no case less than 30 psi. The temperature rating of such valves and cocks shall not be less than 250°F.

TABLE HG-715
SIZE OF BOTTOM BLOWOFF PIPING, VALVES, AND COCKS

Minimum Required Safety Valve Capacity, lb of steam/hr [Note (1)]	Blowoff Piping, Valves, and Cocks Size, in. (min.)
Up to 500	$\frac{3}{4}$
501 to 1250	1
1251 to 2500	$1\frac{1}{4}$
2501 to 6000	$1\frac{1}{2}$
6001 and larger	2

NOTE:
(1) To determine the discharge capacity of safety relief valves in terms of Btu, the relieving capacity in lb of steam/hr is multiplied by 1000.

HG-716 MODULAR BOILERS

(a) Individual Modules

(1) The individual modules shall comply with all the requirements of Part HG, except as specified in HG-607, HG-615, and this paragraph. The individual modules shall be limited to a maximum input of 400,000 Btuh (gas), 3 gal/hr (oil), or 115 kW (electricity).

(2) Each module of a steam heating boiler shall be equipped with:

(a) safety valve, see HG-701

(b) blowoff valve, see HG-715(a)

(c) drain valve, see HG-715(c)

(3) Each module of a modular hot water heating boiler shall be equipped with:

(a) safety relief valve, see HG-701

(b) drain valve, see HG-715(c)

(b) Assembled Modular Boilers

(1) The individual modules shall be manifolded together at the job-site without any intervening valves. The header or manifold piping is field piping and is exempt from Article 2, Part HG, HF, HB, or HC.

(2) The assembled modular steam heating boiler shall also be equipped with:

(a) feedwater connection, see HG-705(a)

(b) return pipe connection, see HG-703.2

(3) The assembled modular hot water heating boiler shall also be equipped with:

(a) makeup water connection, see HG-705(b)

(b) provision for thermal expansion, see HG-709

(c) stop valves, see HG-710.2

RS-002866
1/17/02
NUECES

ARTICLE 1
GENERAL

HF-100 SCOPE

The rules in Part HF are applicable to heating boilers that are constructed primarily of wrought materials, and shall be used in conjunction with general requirements of Part HG of this Section.

RS-002867
1/17/02
NUECES

ARTICLE 2
MATERIAL REQUIREMENTS

HF-200 GENERAL MATERIAL REQUIREMENTS

Materials subject to stress due to pressure shall conform to one of the specifications given in Section II and shall be limited to those listed in Tables HF-300.1 and HF-300.2.

HF-201 PLATE

(a) Plate used in the construction of pressure containing parts shall conform to one of the specifications given in Section II for which allowable stress values are given in Tables HF-300.1 and HF-300.2 except as otherwise provided in HF-203 and HF-205.

(b) Stainless Type 304, 304L, 316, or 316L plates of SA-240 for which allowable stress values are given in Table HF-300.1 may be used in the construction of hot water heating boilers provided the following are met.

(1) The water temperature shall not exceed 210°F.

(2) The material shall be fully annealed.

HF-202 RODS, BARS, AND SHAPES

(a) Rods, bars, and shapes may be used in boiler construction for pressure parts such as flange rings, stiffening rings, braces, frames for reinforced openings, stays and staybolts, and similar parts. Rods, bars, and shapes shall conform to one of the specifications in Section II and shall be limited to those listed in Tables HF-300.1 and HF-300.2 except as otherwise provided in HF-203 and HF-205.

(b) Rods, bars, and shapes conforming to Section II that are of structural quality may be used for parts not directly subjected to pressure, and materials not identified by certification may be used for nonpressure parts such as skirts, baffles, and supports, provided it is demonstrated that the material is of weldable quality.

HF-203 PREFABRICATED OR PREFORMED PRESSURE PARTS

Prefabricated or preformed pressure parts for boilers which are subject to allowable working stresses due to internal or external pressure in the boilers and which are furnished by other than the shop of the manufacturer responsible for the completed boilers shall conform to all applicable requirements of the Code as related to a completed boiler, including inspection in the shop of the parts manufacturer and the furnishing of Partial Data Reports except as permitted in HF-203.1, HF-203.2, and HF-203.3.

HF-203.1 Cast, Forged, Rolled, or Die Formed Standard Pressure Parts

(a) Pressure parts such as pipe fittings, valves, flanges, nozzles, welding necks, welding caps, manhole frames and covers, and casings of pumps that are part of a boiler circulating system that are wholly formed by casting, forging, or die forming shall not require inspection, mill test reports or Partial Data Reports; however, they shall be made of materials permitted under Section II or in a Code-accepted standard (such as ANSI) covering the particular type of pressure part. Such parts shall be marked with the name or trademark of the manufacturer and such other markings as are required by the several standards. Such markings shall be considered as the manufacturer's certification that the product complies with the material specifications and standards indicated and is suitable for service at the rating indicated. The intent of the paragraph will have been met if, in lieu of the detailed marking on the part itself, the parts described herein have been marked in any permanent or temporary manner that will serve to identify the part with the manufacturer's written listing of the particular items and such listings are available for examination by the Inspector.

(b) Parts of small size falling within this category for which it is difficult or impossible to obtain identified material or which may be stocked and for which

RS-002868
1/17/02
NUECES

mill test reports or certificates cannot be economically obtained and are not customarily furnished, and which do not appreciably affect the safety of the vessel, may be used for relatively unimportant parts or parts stressed to not more than 50% of the stress value permitted by the Code provided they are suitable for the purpose intended and are accepted by the Inspector [see HF-203.1(a)]. The manufacturer of the completed vessel shall satisfy himself that the part is suitable for the design conditions specified for the completed vessel.

HF-203.2 Cast, Forged, Rolled, or Die Formed Nonstandard Pressure Parts. Pressure parts such as shells, heads, removable cover plates, and pipe coils which are attached to other wrought parts and which are wholly formed by casting, forging, rolling, or die forming may be supplied basically as materials. All such parts shall be made of materials permitted under Section II and the manufacturer of the part shall furnish mill test reports or other acceptable evidence to that effect. Such parts shall be marked with the name or trademark of the manufacturer and with such other markings as will serve to identify the particular parts with accompanying material identification. The manufacturer of the completed boiler shall satisfy himself that the part is suitable for the design conditions specified for the completed boiler.

HF-203.3 Welded Standard Pressure Parts for Use Other Than the Shell of a Boiler[1]

(a) Pressure parts such as pipe fittings, nozzles, welding necks, welding caps, valves, and flanges that are fabricated by one of the welding processes recognized by the Code shall not require inspection, mill test reports, or Partial Data Reports provided:

(1) all such parts are made of materials permitted under Section II or in a Code-accepted standard;

(2) if arc or gas welded, the welding complies with the rules of this Section.

(b) Such parts shall be marked with the name or trademark of the manufacturer and with such other markings as will serve to identify the materials of which the parts are made. Such markings shall be considered as the manufacturer's certification that the product complies with HF-203.3(a)(1). A statement by the parts manufacturer that all welding complies with Code requirements shall be accepted as evidence that the product complies with HF-203.3(a)(2).

[1] Arc and gas welded pipe for use as the shell of a boiler shall be subject to the same requirements as a shell fabricated from plate, including inspection at the point of manufacture and Partial Data Reports.

HF-204 PIPE AND TUBES

Pipe and tubes of seamless or welded construction shall conform to one of the specifications given in Section II for which allowable stress values are given in Tables HF-300.1 and HF-300.2 except as otherwise provided in HF-203 and HF-205 when used in the construction of pressure containing parts.

HF-204.1 Integrally Finned Tubes. Integrally finned tubes may be made from tubes that conform in every respect with one of the specifications given in Section II except that the pressure test is not required for nonferrous tubes. These tubes may be used under the following conditions.

(a) The tubes after finning shall have a temper or condition which conforms to one of those provided in the governing specifications.

(b) The maximum allowable stress value for the finned tube shall be that given in Tables HF-300.1 and HF-300.2 for the tube before finning, except as permitted in (c) below.

(c) The maximum allowable stress value for a temper or condition that has a higher stress value than that of the tube before finning may be used provided that qualifying tensile tests demonstrate that such a temper or condition is obtained. The stress values used shall not exceed those shown in Tables HF-300.1 and HF-300.2 for the temper or condition involved. The qualifying tensile tests shall be made on specimens of finned tube from which the fins have been removed by machining.

(d) The maximum allowable internal or external design pressure of the tube shall be based on either the minimum wall thickness of the finned section or of the unfinned section, whichever is smaller.

(e) In addition to the tests required by the governing specifications (except for pressure tests for nonferrous tubes), each tube after finning shall withstand without evidence of leakage an internal pneumatic test of not less than 250 psi for 5 sec. The test method used shall permit easy visual detection of any leakage, such as immersion of the tube under water or a pressure differential method.[2]

HF-204.2 Stainless Tubes. Tubes of SA-249 and SA-213 for which allowable stress values are given in Table HF-300.1 may be used in the construction of hot water heating boilers provided the following conditions are met.

[2] The pressure differential method is described in *Materials and Research Standards*, Vol. 1, No. 7, July 1961, published by ASTM.

RS-002869
1/17/02
NUECES

(a) The total internal water volume of watertube boilers with Grade 304, 304L, 316, or 316L tubes shall be limited to not over 578 cu in. (2½ gal). The diameter of these tubes shall be limited to 1½ in. O.D.

(b) The total internal water volume of firetube boilers with Grade 304, 304L, 316, or 316L tubes shall be limited to not over 80 gal. The diameter of these tubes shall be limited to a maximum of 4 in. O.D.

(c) All tubes subject to internal pressure shall have a minimum thickness of 0.039 in. Any tubes subject to external pressure shall have a minimum thickness of 0.039 in. for outside diameters up to and including ⅝ in., 0.062 in. for outside diameters over ⅝ in. up to and including 1½ in., and 0.078 in. for outside diameters over 1½ in. up to and including 4 in.

(d) The water temperature shall not exceed 210°F.

(e) The material shall be fully annealed.

(f) Nonpressure part attachments that have essentially no load carrying function, such as extended heating surfaces, shall be joined to pressure parts by any welding process performed in accordance with a Welding Procedure Specification (in compliance with Section IX as far as applicable), except that procedure and performance qualification testing is not required.

(g) Heat input during welding of fins of the tubes shall be kept low to reduce heat effect on the water side surfaces of the tubes.

(h) Type 304, 304L, 316, or 316L tubes, fittings, or headers, joined by welding, shall use the GTAW or GMAW process.

(i) Welding or brazing shall be qualified in accordance with Section IX.

HF-205 MATERIAL NOT FULLY IDENTIFIED

Material that has lost its identity with a permitted specification may be accepted provided that it satisfies the conditions given in either HF-205.1 or HF-205.2.

HF-205.1 Acceptance by Authentic Test Record and Marking. Each piece shall be shown to have chemical requirements and mechanical properties within the permissible range of the permitted specification in Section II by an authentic test record and by marking identifying it with that record. When the permitted specification requires other tests or more restrictive tests than those of the specification covered by the authentic test record, the material shall be subjected to sufficient additional tests to satisfy the Inspector that it complies with the permitted specification.

HF-205.2 Acceptance by Testing

(a) Plate. The chemical check analyses and mechanical tests of plates shall be made as required in the permitted specification with the following modifications. The carbon and manganese contents shall be determined in all check analyses. The Inspector shall decide whether these contents are acceptable when the permitted specification does not specify carbon and manganese limits. When the direction of rolling is not definitely known, two tension specimens shall be taken at right angles to each other from a corner of each plate, and two bend specimens shall be taken from the middle of adjacent sides of each plate. One tension specimen and both bend specimens shall meet the permitted specification requirements.

(b) Tubes and Pipe. Each length of tube or pipe shall be subjected to a chemical check analysis and sufficient mechanical tests to satisfy the Inspector that all the material is identified with a given heat or heat treatment lot and that the material complies with the chemical and mechanical requirements of the permitted specification. Material specified as suitable for welding, cold bending, close coiling, and similar operations shall be given sufficient check tests to satisfy the Inspector that it is suitable for the fabrication procedure to be used.

(c) Rods, Bars, and Shapes. Each length of rods shall be subjected to a chemical check analysis and sufficient mechanical tests to satisfy the Inspector that all the material is identified with a given heat or heat treatment lot, and that the material complies with the chemical and mechanical requirements of the permitted specification. Material specified as suitable for welding, cold bending, and similar operations shall be given check tests to satisfy the Inspector that it is suitable for the fabrication procedure to be used.

HF-205.3 Marking and Report on Tests of Nonidentified Material. When the identity of the material with the permitted specification has been established in accordance with HF-205.1 or HF-205.2, each piece of material (except as alternatively provided in the specification for tubes, pipe, rods, bars, or shapes) shall be marked to the satisfaction of the Inspector by the boiler manufacturer or the testing agency, with a marking giving the permitted specification number and grade or type and a serial S-number identifying the particular lot of material. A suitable report, clearly marked as being a "Report on Tests of Nonidentified Material," shall be furnished, properly filled out and certified by the boiler manufacturer or testing agency, and this report, when accepted by the Inspector, shall constitute authority to use the material.

RS-002860
1/17/02
NUECES

(3) $\frac{2}{3}$ of the specified minimum yield strength at room temperature;

(4) $\frac{2}{3}$ of the yield strength at temperature.

(c) For bolting materials, the basis for setting stresses is the same as for all other materials with the exception that (1) and (2) above are:

(1) $\frac{1}{4}$ of the specified minimum tensile strength at room temperature; and

(2) $\frac{1}{4}$ of the tensile strength at temperature.

The following limitation also applies to bolting materials: at temperatures below the creep range, the stresses for materials whose strength has been enhanced by heat treatment or by strain hardening shall not exceed the lesser of 20% of the specified minimum tensile strength at room temperature or 25% of the specified minimum yield strength at room temperature unless these values are lower than the annealed values, in which case the annealed values shall be used.

RS-002861
1/17/02
NUECES

TABLE HF-300.1
MAXIMUM ALLOWABLE STRESS VALUES FOR FERROUS MATERIALS, ksi
(Multiply by 1000 to Obtain psi)

Spec. No.	Grade	Nominal Composition	P-No.	Spec. Min. Tensile Strength, ksi	Notes	Max. Allow. Stress Value, ksi
Plate Steels						
Carbon Steels						
SA-36	...	C–Mn–Si	1	58.0	(7)(20)	11.6
SA-285	A	C	1	45.0	...	9.0
SA-285	B	C	1	50.0	...	10.0
SA-285	C	C	1	55.0	...	11.0
SA-442	55	C-Mn-Si	1	55.0	...	11.0
SA-442	60	C-Mn-Si	1	60.0	...	12.0
SA-455	...	C-Mn	1	75.0	(8)	15.0
SA-455	...	C-Mn	1	73.0	(9)	14.6
SA-455	...	C-Mn	1	70.0	(10)	14.0
SA-515	55	C-Si	1	55.0	...	11.0
SA-515	60	C-Si	1	60.0	...	12.0
SA-515	65	C-Si	1	65.0	...	13.0
SA-515	70	C-Si	1	70.0	...	14.0
SA-516	55	C-Si	1	55.0	...	11.0
SA-516	60	C-Mn-Si	1	60.0	...	12.0
SA-516	65	C-Mn-Si	1	65.0	...	13.0
SA-516	70	C-Mn-Si	1	70.0	...	14.0
Sheet Steels						
Carbon Steels						
SA-414	A	C	1	45.0	...	9.0
SA-414	B	C	1	50.0	...	10.0
SA-414	C	C	1	55.0	...	11.0
SA-414	D	C-Mn	1	60.0	...	12.0
SA-414	E	C-Mn	1	65.0	...	13.0
SA-414	F	C-Mn	1	70.0	...	14.0
SA-414	G	C-Mn	1	75.0	...	15.0
SA-620	...	C	1	40.0	...	8.0
Pipe and Tubes						
Seamless Carbon Steel						
SA-53	A	C	1	48.0	...	9.6
SA-53	B	C-Mn	1	60.0	...	12.0
SA-106	A	C-Si	1	48.0	...	9.6
SA-106	B	C-Si	1	60.0	...	12.0
SA-106	C	C-Si	1	70.0	...	14.0
SA-192	...	C-Si	1	(47.0)	(1)	9.4
SA-210	A	C-Si	1	60.0	...	12.0

RS-002862
1/17/02
NUECES

TABLE HF-300.1 (CONT'D)
MAXIMUM ALLOWABLE STRESS VALUES FOR FERROUS MATERIALS, ksi
(Multiply by 1000 to Obtain psi)

Spec. No.	Grade	Nominal Composition	P-No.	Spec. Min. Tensile Strength, ksi	Notes	Max. Allow. Stress Value, ksi
Pipe and Tubes (Cont'd)						
Electric Resistance Welded Carbon Steel						
SA-53	A	C	1	48.0	(2)	8.2
SA-53	B	C-Mn	1	60.0	(2)	10.2
SA-135	A	C	1	48.0	(2)	8.2
SA-135	B	C-Mn	1	60.0	(2)	10.2
SA-178	A	C	1	(47.0)	(1)(2)	8.0
SA-178	C	C	1	60.0	(2)	10.2
SA-226	...	C-Si	1	(47.0)	(1)(2)	8.0
Butt Welded						
SA-53	Steel	C	1	45.0	(4)	5.4
Forgings						
Carbon Steels						
SA-105	...	C-Si	1	70.0	...	14.0
SA-181	Class 60	C-Si	1	60.0	...	12.0
SA-181	Class 70	C-Si	1	70.0	...	14.0
SA-266	1	C-Si	1	60.0	...	12.0
SA-266	2	C-Si	1	70.0	...	14.0
SA-266	3	C-Si	1	75.0	...	15.0
Castings						
Carbon Steels						
SA-216	WCA	C-Si	1	60.0	(5)	9.6
SA-216	WCB	C-Si	1	70.0	(5)	11.2
Bolting						
Carbon Steels						
SA-307	B	C	...	55.0	(6)	7.0
SA-193	B5	5Cr-$^1/_2$Mo	...	...	(6)	25.0
SA-193	B7	1Cr-0.2Mo	...	...	(6)	25.0
SA-320	L7, L9,	...	...	...	(6)	25.0
	L10, L43	...	...	...	...	...
SA-325	1	C	...	...	(6)	7.0
SA-354	BC	...	...	...	(6)	25.0
SA-354	BD	...	...	...	(6)	25.0

RS-002863
1/17/02
NUECES

TABLE HF-300.1 (CONT'D)
MAXIMUM ALLOWABLE STRESS VALUES FOR FERROUS MATERIALS, ksi
(Multiply by 1000 to Obtain psi)

Spec. No.	Grade	Nominal Composition	P-No.	Spec. Min. Tensile Strength, ksi	Notes	Max. Allow. Stress Value, ksi
Bars and Stays						
Carbon Steels						
SA-36	...	C-Mn-Si	1	58.0	(7)	11.6
SA-675	45	C	1	45.0	...	9.0
SA-675	50	C	1	50.0	...	10.0
SA-675	55	C	1	55.0	...	11.0
SA-675	60	C	1	60.0	...	12.0
SA-675	65	C	1	65.0	...	13.0
SA-675	70	C	1	70.0	...	14.0
Plate						
Alloy Steel						
SA-240	304	18Cr-8Ni	8	75.0	(16)(17)	15.0
SA-240	304L	18Cr-8Ni	8	70.0	(16)(17)	14.0
SA-240	316	Plate (16Cr-12Ni-2Mo)	8	75.0	(14)(16)(17)	15.0
SA-240	316L	Plate (16Cr-12Ni-2Mo)	8	70.0	(14)(16)(17)	14.0
SA-240	439	18Cr-Ti	7, Gr. No. 2	65.0	(11)(12)(13)(14)	13.0
SA-240	S44400	18Cr-Mo	7, Gr. No. 2	60.0	(11)(14)(19)	12.0
Tube						
Alloy Steel						
SA-213	TP304	Smls. Tb. (18Cr-8Ni)	8	75.0	(15)(16)(17)	15.0
SA-213	TP304L	Smls. Tb. (18Cr-8Ni)	8	70.0	(15)(16)(17)	14.0
SA-213	TP316	Smls. Tb. (16Cr-12Ni-2Mo)	8	75.0	(14)(15)(16)(17)	15.0
SA-213	TP316L	Smls. Tb. (16Cr-12Ni-2Mo)	8	70.0	(14)(15)(16)(17)	14.0
SA-249	TP304	Wld. Tb. (18Cr-8Ni)	8	75.0	(2)(15)(16)(17)	12.8
SA-249	TP304L	Wld. Tb. (18Cr-8Ni)	8	70.0	(2)(15)(16)(17)	11.9
SA-249	316	Wld. Tb. (16Cr-12Ni-2Mo)	8	75.0	(2)(14)(15)(16)(17)	12.8
SA-249	316L	Wld. Tb. (16Cr-12Ni-2Mo)	8	70.0	(2)(14)(15)(16)(17)	11.9
SA-268	S44400	18Cr-2Mo	7, Gr. No. 2	60.0	(11)(14)(19)	12.0
SA-268	TP439	17Cr-Ti	7, Gr. No. 2	60.0	(11)(12)(13)(14)	12.0

RS-002864
1/17/02
NUECES

TABLE HF-300.1 (CONT'D)
MAXIMUM ALLOWABLE STRESS VALUES FOR FERROUS MATERIALS, ksi
(Multiply by 1000 to Obtain psi)

Spec. No.	Grade	Nominal Composition	P-No.	Spec. Min. Tensile Strength, ksi	Notes	Max. Allow. Stress Value, ksi
Pipe						
Alloy Steel						
SA-312	TP304	Smls. Pp. (18Cr-8Ni)	8	75.0	(16)(17)	15.0
SA-312	TP304L	Smls. Pp. (18Cr-8Ni)	8	70.0	(16)(17)	14.0
SA-312	316	Smls. Pp. (16Cr-12Ni-2Mo)	8	75.0	(14)(16)(17)	15.0
SA-312	316L	Smls. Pp. (16Cr-12Ni-2Mo)	8	70.0	(14)(16)(17)	14.0
SA-312	TP304	Wld. Pp. (18Cr-8Ni)	8	75.0	(2)(16)(17)	12.7
SA-312	TP304L	Wld. Pp. (18Cr-8Ni)	8	70.0	(2)(16)(17)	11.9
SA-312	316	Wld. Pp. (16Cr-12Ni-2Mo)	8	75.0	(2)(14)(16)(17)	12.7
SA-312	316L	Wld. Pp. (16Cr-12Ni-2Mo)	8	70.0	(2)(14)(16)(17)	11.9
Bar						
Alloy Steel						
SA-479	S44400	18Cr-2Mo	7, Gr. No. 2	60.0	(11)(14)(19)	12.0
SA-479	439	17Cr-Ti	7, Gr. No. 2	70.0	(11)(12)(13)(14)	14.0
Forgings						
Alloy Steel						
SA-182	F304	Forg. (18Cr-8Ni)	8	75.0	(16)(17)	15.0
SA-182	F304L	Forg. (18Cr-8Ni)	8	70.0	(16)(17)	14.0
SA-182	F316	Forg. (16Cr-12Ni-2Mo)	8	75.0	(14)(16)(17)	15.0
SA-182	F316L	Forg. (16Cr-12Ni-2Mo)	8	70.0	(14)(16)(17)	14.0
Castings						
Alloy Steel						
SA-351	CF8C	18Cr-10Ni-Cb	8	70.0	(5)(17)(18)	11.2
SA-351	CF3M	16Cr-12Ni-2Mo	8	70.0	(5)(14)(17)(18)	11.2

NOTES: See next page.

RS-002885
1/17/02
NUECES

NOTES:

(1) Tensile value in parenthesis is expected minimum.
(2) The stress value includes a joint factor of 0.85.
(3) The stress value includes a joint factor of 0.80.
(4) The stress value includes a joint factor of 0.60.
(5) The stress value includes a casting quality factor of 0.80. Increased casting quality factors as a result of material examination beyond the requirements of the material specifications shall not be permitted.
(6) The stress value is established from a consideration of strength only and will be satisfactory for average service. For bolted joints, where freedom from leakage over a long period of time without retightening is required, lower stress values may be necessary as determined from the relative flexibility of the flange and bolts, and corresponding relaxation properties.
(7) These allowable stress values apply also to structural shapes.
(8) For thicknesses up to $^{3}/_{8}$ in., inclusive.
(9) For thicknesses over $^{3}/_{8}$ in. to 0.580 in., inclusive.
(10) For thicknesses over 0.580 to 0.750 in., inclusive.
(11) The maximum thickness of material covered by this Table is $^{1}/_{2}$ in.
(12) The service temperature shall not exceed 200°F.
(13) Filler metal shall be Type 430 with a nominal titanium content of approximately 1.25%. The 300 series of chromium-nickel-iron filler metals shall not be used in welding vessels conforming to the requirements of Section IV.
(14) The welding processes employed in fabrication shall be limited to the gas tungsten arc welding process and the gas metal arc welding process. Shielding gas for the gas shielded metal arc process shall be argon or helium. Oxygen up to 2% may be added to the argon.
(15) Tubing material shall be fully annealed.
(16) Limitations of HF-204.2 also apply.
(17) The water temperature shall not exceed 210°F.
(18) The minimum thickness for header material is 0.10 in.
(19) Filler metal shall be Type 430 with a nominal molybdenum content of approximately 2%. The 300 series of chromium-nickel-iron filler metals shall not be used in welding vessels conforming to the requirements of Section IV.
(20) See Appendix 4 for Canadian Standards Association structural steels specification for plates and bars not exceeding $^{1}/_{4}$ in. for use at the same maximum allowable stress value as SA-36.

RS-002866
1/17/02
NUECES

TABLE HF-300.2
MAXIMUM ALLOWABLE STRESS VALUES FOR NONFERROUS MATERIALS, ksi
(Multiply by 1000 to Obtain psi)

Spec. No.	Copper or Copper Alloy No.	Form	Condition	P-No.	Spec. Min. Tensile Stress, ksi	Spec. Min. Yield Stress, ksi	Notes	Max. Allow. Stress Value, ksi
Copper								
SB-12	Copper	Rods	Annealed	31	30.0	10.0	(2)	6.0
SB-42	Copper	Pipe	Annealed	31	30.0	9.0	(2)(3)	5.8
SB-42	Copper	Pipe	Drawn — ⅛ in. to 2 in. NPS, incl.	31	45.0	40.0	(1)(2)(3)	9.0
SB-42	Copper	Pipe	Drawn — 2½ in. to 12 in. NPS incl.	31	36.0	30.0	(1)(2)(3)	7.2
SB-75	Copper	Smls. Tubes	Annealed	31	30.0	9.0	(2)	5.8
SB-75	Copper	Smls. Tubes	Light Drawn	31	36.0	30.0	(1)(2)	7.2
SB-75	Copper	Smls. Tubes	Hard Drawn	31	45.0	40.0	(1)(2)	9.0
SB-111	Copper	Smls. Condenser Tubes	Annealed	31	30.0	9.0	(2)	5.8
SB-152	Copper	Plate, Sheet, Strip, & Bar	Annealed	31	30.0	10.0	(2)	6.0
SB-283	C37700	Forging Brass	As Forged	. . .	. . .	. . .	(9)(10)	5.8
SB-395	Copper	Smls. Tubes	Annealed	31	30.0	9.0	(2)	5.8
SB-395	Copper	Smls. Tubes	Light Drawn	31	36.0	30.0	(1)(2)	7.2
Copper-Silicon								
SB-96	665	Plate & Sheet	Annealed	. . .	50.0	18.0	(6)	10.0
SB-98	655	Rods	Soft	. . .	52.0	15.0	(6)	8.0
SB-98	655	Rods	Quarter Hard	. . .	55.0	24.0	(6)	11.0
SB-98	C65100	Rods	060	. . .	40.0	12.0	(6)	6.4
SB-98	C65100	Rods	H02	. . .	55.0	20.0	(6)	11.0
SB-315	655	Pipe & Tube	Annealed	. . .	50.0	15.0	(6)	10.0
Red Brass								
SB-43	230	Pipe	Annealed	32	40.0	12.0	. . .	8.0
SB-111	230	Smls. Condenser Tubes	Annealed	32	40.0	12.0	. . .	8.0
SB-395	230	Smls. Condenser Tubes	Annealed	32	40.0	12.0	. . .	8.0

RS-002867
1/17/02
NUECES

TABLE HF-300.2 (CONT'D)
MAXIMUM ALLOWABLE STRESS VALUES FOR NONFERROUS MATERIALS, ksi
(Multiply by 1000 to Obtain psi)

Spec. No.	Copper or Copper Alloy No.	Form	Condition	P-No.	Spec. Min. Tensile Stress, ksi	Spec. Min. Yield Stress, ksi	Notes	Max. Allow. Stress Value, ksi
Admiralty								
SB-43	443, 444, 445	Smls. Condenser Tubes	Annealed	32	45.0	15.0	. . .	9.0
SB-395	443,444, 445	Smls. Condenser Tubes	Annealed	32	45.0	15.0	. . .	9.0
SB-171	443,444, 445	Tube Plates	Annealed	32	45.0	15.0	. . .	9.0
Naval Brass								
SB-171	464	Tube Plates	Annealed	32	50.0	20.0	. . .	10.0
Copper–Nickel								
SB-111	706	Smls. Condenser Tubes	Annealed	34	40.0	15.0	. . .	8.0
SB-111	710	Smls. Condenser Tubes	Annealed	34	45.0	16.0	. . .	9.0
SB-111	715	Smls. Condenser Tubes	Annealed	34	52.0	18.0	. . .	10.4
SB-171	706	Tube Plates	Annealed — 2½ in. & under	34	40.0	15.0	. . .	8.0
SB-171	715	Tube Plates	Annealed — 2½ in. & under	34	50.0	20.0	. . .	10.0
SB-395	706	Smls. Condenser Tubes	Annealed	34	40.0	15.0	. . .	8.0
SB-395	710	Smls. Condenser Tubes	Annealed	34	45.0	16.0	. . .	9.0
SB-395	715	Smls. Condenser Tubes	Annealed	34	52.0	18.0	. . .	10.4
SB-466	706	Pipe & Tube	Annealed	34	38.0	13.0	. . .	8.0
SB-466	710	Pipe & Tube	Annealed	34	45.0	16.6	. . .	9.0
SB-466	715	Pipe & Tube	Annealed	34	50.0	18.0	. . .	10.4
Nickel–Copper								
SB-164	400	Bar	Hot Finished	42	75.0	30.0	(8)	15.0
SB-164	400	Rounds	Hot Finished	42	80.0	. . .	(8)	16.0
SB-164	400	4 in. to 12 in. diam.	Stress Relieved	42	80.0	40.0	(8)	16.0

RS-002868
1/17/02
NUECES

TABLE HF-300.2 (CONT'D)
MAXIMUM ALLOWABLE STRESS VALUES FOR NONFERROUS MATERIALS, ksi
(Multiply by 1000 to Obtain psi)

Spec. No.	Copper or Copper Alloy No.	Form	Condition	P-No.	Spec. Min. Tensile Stress, ksi	Spec. Min. Yield Stress, ksi	Notes	Max. Allow. Stress Value, ksi
Nickel-Copper (Cont'd)								
SB-165	400	5 in. O.D. max.	Annealed	42	70.0	28.0	(8)	14.0
SB-165	400	Over 5 in. O.D.	Annealed	42	70.0	25.0	(8)	14.0
SB-165	400	All Tubes Sizes	Stress Relieved	42	85.0	55.0	(8)	17.0
Integrally Finned Tubes								
SB-359	. . .	. . .	. . .	. . .	. . .	. . .	(7)	. . .
Castings								
SB-61	922	Steam Metal Bronze Casting	. . .	. . .	34.0	16.0	(4)(5)	5.4
SB-62	836	85-5-5-5 Composition Brass	. . .	. . .	30.0	14.0	(4)(5)	4.8
SB-584	844	81-3-7-9 Composition Brass	. . .	. . .	29.0	13.0	(4)(5)	4.6

NOTES:
(1) When nonferrous materials conforming to specifications given in Section II are used in welded or brazed construction, the maximum allowable working stresses shall not exceed the values given herein for the material in the annealed condition.
(2) When material is to be welded, the phosphorous deoxided types should be specified.
(3) Minimum tensile strength not given in specification.
(4) The stress value includes a casting quality factor of 0.80. Increased casting quality factors as a result of material examination beyond the requirement of the material specification shall not be permitted. This is not intended to apply to valves and fittings made to recognized standards.
(5) In the absence of evidence that the casting is of high quality throughout, values not in excess of 80% of those given in the Table shall be used. This is not intended to apply to valves and fittings made to recognized standards.
(6) Copper-silicon alloys are not always suitable when exposed to certain median and high temperatures, particularly steam above 212°F. Therefore, this material is limited to the construction of hot water boilers to be operated at a temperature not to exceed 200°F.
(7) Use in accordance with HF-204 and HF-204.1.
(8) To be used for HLW connections only.
(9) For use in HG-307.2(b) Eq. (2), the maximum allowable stress at room temperature (100°F, max.) shall be 10.0 (through 1½ in. thickness) and 9.2 (over 1½ in. thickness).
(10) No welding or brazing permitted.

RS-002869
1/17/02
NUECES

TABLE HF-301.1
MINIMUM ALLOWABLE THICKNESS OF FERROUS SHELL PLATES

Diameter or Width of Shell, Tubesheet, or Head, in.	Minimum Ferrous Material Thickness Allowable Under Rules, in.	
	Tubesheet or Head With Rolled Tubes	Shell Plate
42 or under	5/16	1/4 [1]
Over 42 to 60	3/8	5/16
Over 60 to 78	7/16	3/8
Over 78	1/2	7/16

NOTE:
(1) Shell plate 3/16 in. thickness is permissible for cylindrical shells 24 in. in diameter or less, and for a maximum allowable working pressure not over 30 psi.

TABLE HF-301.2
MINIMUM ALLOWABLE THICKNESS OF NONFERROUS SHELL PLATES

Diameter or Width of Shell, Tubesheet, or Head, in. [Note (1)]	Minimum Nonferrous Material Thickness Allowable Under Rules, in.			
	Tubesheet or Head		Shell Plate	
	Copper Admiralty & Red Brass	Copper–Nickel Alloy	Copper Admiralty & Red Brass	Copper–Nickel Alloy
24 or under	3/16 [2]	5/32 [2]	1/8	3/32
Over 24 to 36	1/4 [2]	3/16 [2]	3/16	1/8
Over 36 to 42	5/16	1/4 [2]	1/4	3/16
Over 42 to 60	3/8	3/8	5/16	5/16
Over 60 to 78	7/16	7/16	3/8	3/8
Over 78	1/2	1/2	7/16	7/16

NOTES:
(1) For the purpose of applying Tables HF-301.1 and HF-301.2 to a noncylindrical boiler, the equivalent shell diameter shall be taken as the width of the unsupported portion of any plate, measured before stays are installed.
(2) See HF-301.2(c).

RS-002870
1/17/02
NUECES

PART HF — SUBPART HW
REQUIREMENTS FOR BOILERS FABRICATED BY WELDING

Article 4	**General Requirements**	
HW-400	Scope	91
HW-401	Responsibility of Manufacturer or Contractor	91
Article 5	**Material Requirements**	
HW-500	Permissible Materials	92
HW-501	Materials of Different Specifications	92
HW-502	Materials for Small Parts	92
Article 6	**Welding Processes and Qualifications**	
HW-600	Welding Processes	93
HW-610	Welding Qualifications	93
HW-611	No Production Work Without Qualifications	93
HW-612	Interchange of Qualifying Tests Among Manufacturers Prohibited	93
HW-613	Maintenance of Records of Qualifications and Identifying Marks	93
Article 7	**Design of Weldments**	
HW-700	Design of Welded Joints	94
HW-701	General Requirements	94
HW-702	Joint Efficiencies	95
HW-703	Minimum Thickness of Welded Parts	95
HW-710	Welded Stays	95
HW-711	Heads or Tubesheets Attached by Welding	97
HW-712	Furnace Attachments	98
HW-713	Tubes Attached by Welding	98
HW-715	Head-to-Shell Attachments	98
HW-720	Openings in Welds	99
HW-730	Welded Connections	99
HW-731	Minimum Requirements for Attachment Welds	100
HW-740	Resistance Welding in Carbon Steel for Other Than Butt Welded Joints	103
HW-745	Resistance Welding of Hydraulically Formed Panels	105
Article 8	**Fabrication Requirements**	
HW-800	Forming Plates	109
HW-801	Base Metal Preparation	109

RS-002871
1/17/02
NUECES

HW-810	Assembly	109
HW-812	Alignment Tolerance	109
HW-813	Distortion	110
HW-820	Specific Welding Requirements	110
HW-830	Repair of Weld Defects	111
HW-840	Posthydrotest Welding of Nonpressure Parts to Pressure Parts	111

Article 9 **Inspection**

HW-900	Inspection During Fabrication	112
HW-910	Check of Welding Procedure Qualifications	112
HW-911	Check of Welder and Welding Operator Performance Qualifications	112

Figures

HW-701.1	Butt Welding of Plates of Unequal Thickness	94
HW-701.3	Some Forms of Attachments of Pressure Parts to Flat Plates to Form a Corner Joint (Tee Joint)	96
HW-710.4(a)	Some Acceptable Types of Diagonal Stays for Installation by Welding	97
HW-710.4(b)	Unacceptable Types of Diagonal Stays for Installation by Welding	97
HW-715.1	Heads Attached to Shells	99
HW-731	Some Acceptable Types of Welded Nozzles and Other Connections to Shells, Drums, and Headers	101
HW-740	Three-Ply Joint Assemblies	104
HW-745	Two-Ply Joint Assemblies	107

RS-002872
1/17/02
NUECES

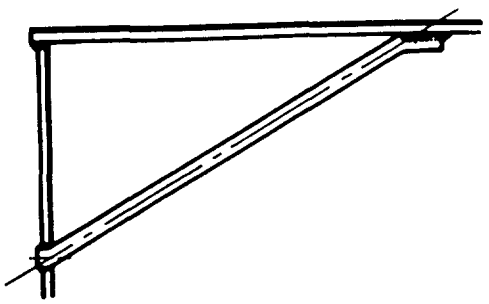

GENERAL NOTE: A round bar or a round bar with a forged palm

FIG. HW-710.4(a) SOME ACCEPTABLE TYPES OF DIAGONAL STAYS FOR INSTALLATION BY WELDING

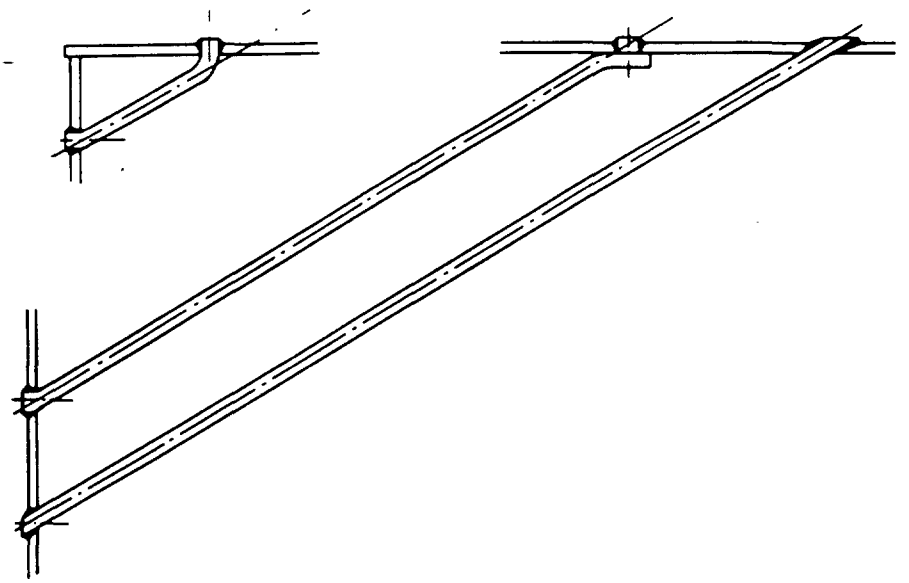

FIG. HW-710.4(b) UNACCEPTABLE TYPES OF DIAGONAL STAYS FOR INSTALLATION BY WELDING

which the stay is attached within the outer boundaries of the attaching welds (also projected if necessary).

(c) Diagonal stays shall, for boilers designed for not more than 30 psi pressure, comply with the requirements of HW-710.1, HW-710.2, and HW-710.3 and shall, for boilers designed for pressures in excess of 30 psi, comply with the requirements of HW-710.5.

HW-710.5 For Pressures in Excess of 30 psi. The stays shall be inserted into holes countersunk in the sheet except as provided in HW-710.4, and shall be attached by full penetration welds.

HW-711 HEADS OR TUBESHEETS ATTACHED BY WELDING

HW-711.1 Flanged Heads or Tubesheets. Boilers may be constructed by attaching an outwardly or inwardly flanged head or tubesheet to the shell by fillet welding provided:

(a) the head or tubesheet is supported by tubes, or braces, or both;

(b) the joint attaching an outwardly flanged head or tubesheet is wholly within the shell and forms no part thereof;

RS-002873
1/17/02
NUECES

(c) inwardly flanged heads or tubesheets are full fillet welded inside and outside;

(d) the throats of the full fillet welds are not less than 0.7 times the thickness of the head or tubesheet;

(e) on inwardly flanged heads or tubesheets, the minimum length of the straight flange shall conform with the requirements of HW-701.2;

(f) the shell at the weld is not in contact with primary furnace gases;

(g) these constructions shall not be used on the rear head of a horizontal-return tubular boiler, and inwardly flanged heads or tubesheets shall not be used on a boiler with an extended shell.

HW-711.2 Unflanged Heads or Tubesheets. Boilers may be constructed by attaching unflanged heads or tubesheets to the shell by welding, provided:

(a) the head or tubesheet is supported by tubes or braces, or both, as required by HG-340, or its thickness is calculated using the appropriate formula from HG-307;

(b) the welding for boilers designed for not more than 30 psi meets the minimum requirements for HW-701.3(a);

(c) the weld for boilers designed for pressure in excess of 30 psi is a full penetration weld applied from either or both sides as shown in Fig. HW-701.3, sketch (d) or (e), or a double full fillet weld as shown in Fig. HW-701.3, sketch (f);

(d) the shell or wrapper sheet, where exposed to primary furnace gases and not water cooled, shall not extend beyond the outside face of the head or tubesheet for a distance greater than the thickness of the head or tubesheet;

(e) this construction shall not be used on the rear head of a horizontal-return tubular boiler.

HW-712 FURNACE ATTACHMENTS

HW-712.1 For Pressures Not More Than 30 psi. A furnace or crown sheet in a boiler designed to these rules for pressures not more than 30 psi may be attached to a head or tubesheet with a full fillet weld, provided:

(a) the furnace shall not extend beyond the outside face of the head or tubesheet for a distance greater than the thickness of the head or tubesheet, unless protected by refractory material; the furnace shall be trimmed to remove any excess material before welding;

(b) the throat of the full fillet weld is not less than 0.7 times the thickness of the head or tubesheet;

(c) the joint attaching a cylindrical furnace to a head or tubesheet is wholly outside the cylindrical portion of the furnace.

HW-712.2 For Pressures in Excess of 30 psi. A furnace or crown sheet in a hot water boiler designed to these rules for pressures in excess of 30 psi shall be attached to a head or tubesheet, as shown in Fig. HW-701.3, by a full penetration weld, with the furnace or crown sheet extending at least through the full thickness of the head or tubesheet, but when exposed to primary gases, furnace or crown sheet projections shall not extend beyond the face of the plate by more than $\frac{3}{8}$ in., unless protected by refractory material.

HW-713 TUBES ATTACHED BY WELDING

(a) The edge of the plate at the tubesheet hole may be beveled or recessed. The depth of any bevel or recess shall not be less than the tube thickness or $\frac{1}{8}$ in., whichever is greater, nor more than one-third of the tubesheet thickness. Where the plate is beveled or recessed, the projection of the tubes beyond the tube sheet shall not exceed a distance equal to the tube thickness, but shall extend at least through the tubesheet.

(b) Where no bevel or recess is employed, tubes shall extend beyond the tubesheet not less than the tube thickness or $\frac{1}{8}$ in., whichever is less, nor more than $\frac{1}{4}$ in., for firetubes, nor more than $\frac{1}{2}$ in., for watertubes. This extension does not apply to Fig. HW-731, sketches (a) and (b). For welded attachments see HW-731.

(c) The minimum size of the weld for firetubes used as stays shall be that calculated in accordance with HW-710.1 for a solid circular stay having the same cross-sectional area as the firetube.

HW-715 HEAD-TO-SHELL ATTACHMENTS

Ellipsoidal, torispherical, hemispherical, and other types of formed heads, concave or convex to the pressure shall have the following requirements as to skirt length.

(a)(1) An ellipsoidal or torispherical head which is attached to a shell by a butt joint need not be provided with a skirt when the nominal head thickness does not exceed $1\frac{1}{4}$ times the nominal shell thickness. When the nominal head thickness exceeds $1\frac{1}{4}$ times the nominal shell thickness, a skirt shall be provided having a length not less than three times the nominal head thickness or $1\frac{1}{2}$ in., whichever is smaller. When a skirt is used it shall meet the requirements for shell thickness in HG-301.

(2) Flanged heads concave to pressure may be attached to shells using a butt weld with one plate offset as shown in Fig. HW-715.1 provided the welded joint is not in contact with primary furnace gases. The

RS-002874
1/17/02
NUECES

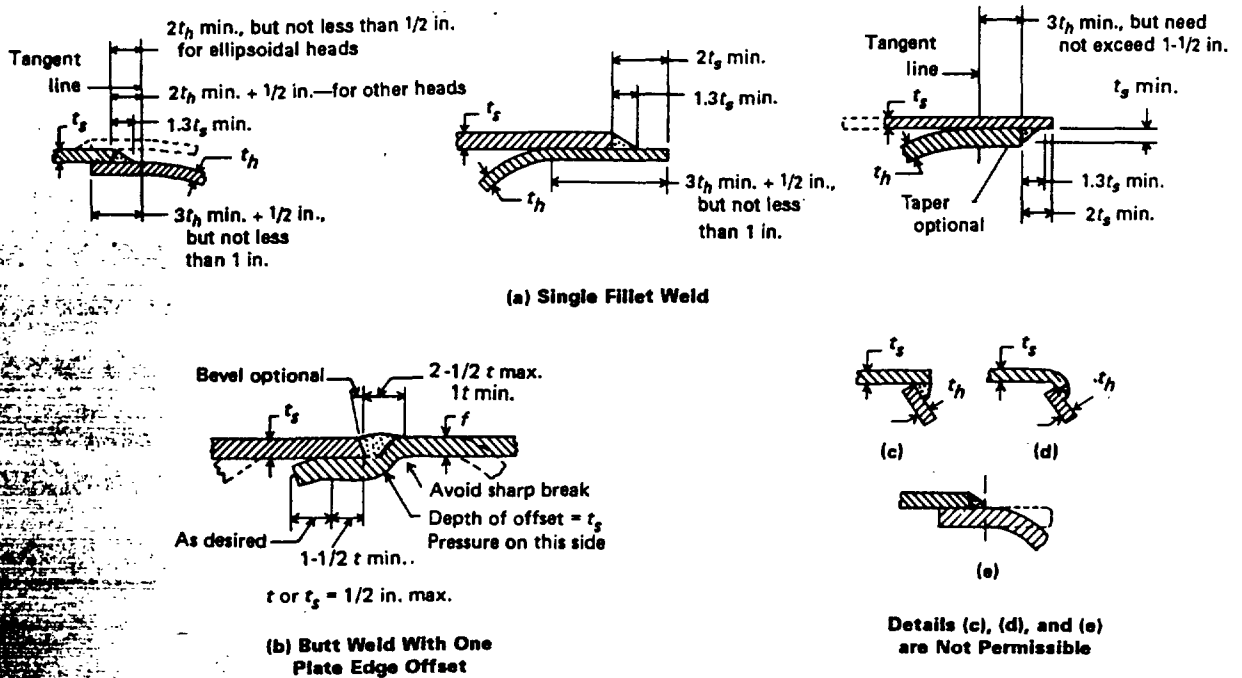

FIG. HW-715.1 HEADS ATTACHED TO SHELLS A95

offset shall be smooth and symmetrical and shall not be machined or otherwise reduced in thickness. There shall be a uniform force fit with the mating section at the root of the weld.

(b) Ellipsoidal or torispherical heads, concave or convex to the pressure, shall have a skirt length not less than that shown in Fig. HW-715.1 provided the welded joint is not in contact with primary furnace gases. Heads that are fitted inside or over a shell shall have a driving fit before welding.

(c) Formed heads of full hemispherical shape, concave to pressure, need not have an integral skirt, but where a skirt is provided for butt welded attachment, the thickness of the skirt shall be at least that required for a seamless cylindrical shell of the same diameter.

(d) Flanged ellipsoidal or torispherical heads convex to pressure may be attached to the shell with a full fillet weld with throat no less than 0.7 times the head thickness. The shell at the weld shall not be in contact with primary furnace gases.

HW-720 OPENINGS IN WELDS

Any type of opening that meets the requirements for reinforcement given in HG-321 may be located in a butt welded joint.

HW-730 WELDED CONNECTIONS

HW-730.1 Strength of Attachment Welds. Nozzles, other connections, and their reinforcement may be attached to a boiler by arc or gas welding. Sufficient welding shall be provided on either side of the line through the center of the opening parallel to the longitudinal axis of the shell to develop the strength of the shell as prescribed in HG-327 through shear or tension in the weld, whichever is applicable. The strength of groove welds shall be based on the area subjected to shear or to tension. The strength of fillet welds shall be based on the area subjected to shear, computed on the minimum leg dimension. The inside periphery of fillet weld shall be used in computing its length.

HW-730.2 Stress Values for Weld Metal. The allowable stress values for groove and fillet welds and for shear in nozzle necks in percentages of stress values for the vessel material are as follows:

Nozzle-wall shear	70%
Groove-weld tension	74%
Groove-weld shear	60%
Fillet-weld shear	49%

NOTE: These values are obtained by combining the following factors: 87½% for combined end and side loading, 80% for shear strength, and the applicable joint efficiency factors.

RS-002875
1/17/02
NUECES

HW-730.3 Telltale Holes in Reinforcement Plates and Saddles. Separate reinforcement plates and saddles used to reinforce the material around openings and that are attached to the outside of a boiler shall be provided with at least one telltale hole [maximum size: 1/4 in. pipe tap] that may be tapped for a preliminary compressed-air and soapsuds test for tightness of welds that seal off the inside of the boiler. These telltale holes may be left open when the boiler is in service. If the holes are plugged, the plugging material used shall not be capable of sustaining pressure between the plate and the boiler wall.

HW-730.4 Stud Welds. Arc stud welding and resistance stud welding, as defined in E-101, where the boiler pressure exerts a tensile load on the studs, may be used only for the attachments of bolted unstayed flat heads, cover plates and blind flanges, handholes and manholes, with the further limitations as follows.

(a) Studs attached by stud welding shall not be in direct contact with products of combustion or flue gases.

(b) Where the pressure exerts a tensile load on the studs, a full face gasket must be used on flat heads, cover plates and blind flanges attached by stud welding.

(c) The minimum size stud used shall be not less than 1/4 in. nominal diameter, and the maximum size shall not exceed 7/8 in. nominal diameter.

(d) The type of stud shall be limited to round externally threaded studs.

(e) Base metal shall be of ferrous material specification as permitted by this Section, and the base metal must be thick enough to prevent burn through. See HW-500(b) for stud material.

(f) The maximum spacing of studs shall not exceed 12 times the nominal diameter of the stud.

(g) The maximum allowable stress for the stud shall be 7800 psi based on the smallest cross-sectional area (i.e., the root of the thread).

HW-731 MINIMUM REQUIREMENTS FOR ATTACHMENT WELDS

HW-731.1 General. The location and minimum size of attachment welds for nozzles and other connections shall conform to the requirements in this paragraph.

(a) Notation. The symbols used in this paragraph and in Fig. HW-731 are defined as follows:

t = nominal thickness of boiler shell or head, in.

t_n = nominal thickness of nozzle wall, in.

t_w = dimension of partial penetration attachment welds (fillet, single-bevel, or single-J), measured as shown in Fig. HW-731, in.

t_c = not less than the smaller of 1/4 in. or 0.7 $t_{min.}$ (inside corner welds may be further limited by a lesser length of projection of nozzle wall beyond the inside face of the boiler wall)

t_{min} = the smaller of 3/4 in. or the thickness of the thinner of the parts joined by a fillet, single-bevel, or single-J weld, in.

t_1, t_2 = not less than the smaller of 1/4 in. or 0.7 t_{min} and $t_1 + t_2$ not less than $1\frac{1}{4}\ t_{min}$

HW-731.2 Necks Abutting the Boiler Shell

(a) Nozzles abutting the boiler shell shall be attached by a full penetration groove weld. Backing strips shall be used with welds deposited from only one side when the shell thickness is over 3/8 in. or when complete joint penetration cannot be verified by visual inspection [for example, see Fig. HW-731, sketch (y)].

(b) Nozzles or tubes recessed into thick boiler shells or headers may be welded from only one side by cutting a welding groove in the boiler shell to a depth of not less than t_n on the longitudinal axis of the opening. It is recommended that a recess at least 1/16 in. deep be provided at the bottom of the groove in which to center the nozzle. The dimension t_w of the attachment weld shall be not less than t_n or less than 1/4 in. [for example, see Fig. HW-731, sketches (y) and (z)].

HW-731.3 Inserted Nozzles Without Added Reinforcement Elements

(a) Nozzles inserted into or through a hole cut in the boiler shell and without additional reinforcement elements shall be attached by a full penetration groove weld or by two partial penetration welds, one on each face of the boiler shell. Permissible types of welds are shown in Fig. HW-731, sketches (c) through (h).

(b) Backing strips shall be used with full penetration welds deposited from one side only when the shell thickness is over 3/8 in. or when complete joint penetration cannot be verified by visual inspection. The two partial penetration welds may be any desired combination of fillet, single-bevel, and single-J welds. The dimension t_w of each weld shall be not less than the smaller of 1/4 in. or 0.7 t_{min} and their sum shall be not less than $1\frac{1}{4}\ t_{min}$ (see Fig. HW-731).

HW-731.4 Inserted Nozzles With Added Reinforcement. Inserted type nozzles having added reinforcement in the form of one or more separate reinforcement plates shall be attached by welds at the nozzle neck periphery and at the outer edge of each reinforcement plate. The weld at the outer edge of each reinforcement plate shall be a fillet weld with a minimum throat

RS-002876
1/17/02
NUECES

INTRODUCTION

The following is a brief introduction to Part HLW. It is general in nature, and should not be considered as a substitute for actual review of appropriate articles of the document. However, this will give the user a better understanding of the purpose, requirements, and intent of Part HLW.

Part HLW applies to water heaters in commercial or industrial sizes providing corrosion resistance for supplying potable hot water for commercial purposes at pressures not exceeding 160 psig and temperatures not exceeding 210°F.

Part HLW does not apply to residential size water heaters which are excluded by provisions of HLW-101 and hot water heating boilers.

Differences in applicable criteria for water heaters versus hot water heating boilers are as follows.

(a) In a water heater, the temperature of the water is limited to a maximum of 210°F.

(b) A water heater is provided with a corrosion resistant lining or constructed with corrosion resistant materials.

(c) A water heater is intended to supply potable hot water with 100% makeup from a potable water supply system. Therefore, certain controls and indicating instruments, such as a water level indicator, low and high water cut-offs, and pressure and altitude gages, are not necessary on a water heater. Vessels built under the rules of Part HLW may be used for storage of potable water.

The following is a brief outline of the contents of each Article of Part HLW.

Article 1 — General

The scope of Part HLW is given, and definitions of the various water heaters are stated.

Article 2 — Materials

The material requirements for the linings permitted are specified as well as the lining thickness requirements. The material requirements specified for the lining materials were, in general, taken from existing standards by abstracting those requirements which were considered to be those essential for the applications covered by these rules.

Article 3 — Design

The design criteria for water heaters is given in Article 3. The pressure is specified as a maximum allowable working pressure of 160 psi with a minimum of 100 psi. The maximum water temperature permitted is 210°F.

The maximum allowable working pressure of the water heater shall be established in accordance with the proof test provision of HLW-500. As an alternative, stress values in Table HLW-300 may be used in calculations employing the available formulas when applicable to the geometry of the lined water heater or parts.

Article 4 — Weldments

The provisions for weldment joint design are similar to those given elsewhere in this Section and in Section VIII, Division 1. In addition, some acceptable joint designs are provided which have been commonly used in the construction of water heaters and have provided satisfactory service performance.

Article 5 — Tests

Proof test procedure is delineated for establishing the maximum allowable working pressure of a water heater or parts, and this test is required to be witnessed and accepted by the Authorized Inspector. The Manufacturer's Master Data Proof Test Report for Lined Water Heaters shall be certified by the designated responsible engineering head of the Manufacturer and the forms shall be kept on file by the Manufacturer as a matter of record.

RS-002877
1/17/02
NUECES

Article 6 — Inspection and Stamping

Inspection and stamping requirements for water heaters are given. An "HLW" Code Symbol Stamp is provided for water heaters made in accordance with Part HLW of Section IV.

Article 7 — Controls

Each water heater is required to have an operating control and a separate high-limit temperature-actuated control which shuts off the fuel supply in case of operating control failure. Water heaters should be equipped with suitable primary safety controls, safety limit switches, burners, or electric elements as appropriate and as required by a nationally recognized standard. Examples of these nationally recognized standards are listed.

Article 8 — Installation

Some acceptable piping installations are shown. Provisions for the installation of safety relief valves and other valves are given.

RS-002878
1/17/02
NUECES

ARTICLE 1
GENERAL

HLW-100 SCOPE

(a) The rules in Part HLW are applicable to water heaters providing corrosion resistance for supplying potable hot water for commercial purposes at pressures not exceeding 160 psi and temperatures not in excess of 210°F. Part HLW is not intended to apply to hot water heating boilers.

A93 (b) Limits for lined water heaters are limited to those listed in HLW-200.

(c) The materials used in the construction of unlined corrosion resistant water heaters are limited to those listed in Table HLW-301.

(d) Tanks built under the rules of Part HLW may be used for storage of potable water. Article 7 need not be applied.

(e) Water heaters and tanks built under the rules of Part HLW may be provided with cathodic protection.

(f) Water heaters used for deionized water fabricated of stainless steel listed in Table HLW-301 may be constructed to Part HLW provided:

(1) all welding meets the requirements of Section IX

(2) the maximum thickness shall be ½ in.

HLW-101 SERVICE RESTRICTION AND EXCEPTION

The rules of Part HLW are restricted to potable water heaters and water storage tanks for operation at pressures not exceeding 160 psi and water temperatures not in excess of 210°F. Based on the Committee's consideration, water heaters are exempted when none of the following limitations is exceeded:

(a) heat input of 200,000 Btu/hr;

(b) water temperature of 210°F;

(c) nominal water-containing capacity of 120 gal, except that they shall be equipped with safety devices in accordance with the requirements of HLW-800.

HLW-102 PERMISSIBLE STAMPING

Any water heater or storage tank that meets all of the requirements of Part HLW, including those for inspection, may be stamped with the Code HLW Symbol even though exempted from such stamping.

RS-002879
1/17/02
NUECES

ARTICLE 2
MATERIAL REQUIREMENTS

HLW-200 LINING

(a) Glass Lined. Glass lining shall be of an analysis intended for use in hot water service and the minimum average thickness shall be 0.005 in. The walls, ends, and other parts that are of steel and are glass lined shall be of a quality that is suitable for glass lining by the manufacturer's glass lining process. Glass lining may be applied to parts before assembly. The surfaces of the water heater vessel that are exposed to hot water shall have a coating with a minimum number of discontinuities, and the discontinuities shall average not more than $\frac{1}{8}$ sq in./sq ft of internal surface excluding edges and fittings. Thinning at corners may not extend over $\frac{1}{4}$ in. from the edge.

(b) Galvanized. The galvanized coating shall be based upon at least 1 oz of zinc/sq ft of surface based upon mathematical calculations corresponding to a coating thickness of 0.0017 in. The weight of the zinc coating shall be determined by weighing the water heater before galvanizing and again after the coatingis applied.

The zinc used for coating shall conform to ASTM B 6, Specification for Zinc (Slab Zinc) and shall be at least equal to the grade designated as "Prime Western." The aluminum content of the bath during actual galvanizing operations shall not exceed 0.01%. The galvanizer shall not damage the material by overpickling or by the use of excessively high temperature in pickling or galvanizing.

(c) Cement Lined. For cement-lined water heaters, the cement shall be applied to provide a minimum thickness of $\frac{3}{16}$ in. The lining shall be properly cured, adhere firmly to, and completely cover the interior of the vessel. The joints at the top of the water heater shall be sealed to prevent corrosion in back of the lining. The water absorption of the lining material shall not be more than 17% of the dry weight of the test specimen. The calcium oxide content shall not exceed 35%. The silicon content shall not be less than 25%.

(d) Copper-Lined. The material used for lining may be any copper of weldable or brazeable quality with a minimum thickness of 0.005 in. Lining attachments to steel backing by welding or brazing shall be in accordance with Section IX.

(e) Fluorocarbon Polymer-Lined. Fluorocarbon polymer linings shall be of an analysis intended for use in potable hot water service, and the minimum thickness shall be 0.003 in. The lining shall be cured at a temperature and for a length of time suitable to assure continuity of lining and elimination of solvents. The water absorption rate of the cured lining shall be less than 2% by the method specified in ASTM D 570 shown in Appendix I. Surfaces to be fluorocarbon polymer-lined must be cleaned to remove all scale, oxidation, oil, etc., prior to application of the lining. Interior surfaces may be coated with electroless nickel prior to lining. Flue tubes may be covered with a minimum thickness of 0.006 in. of sheet copper prior to the application of the fluorocarbon polymer lining.

(f) Amine or Polyamine Epoxy-Lined

(1) Amine or polyamine epoxy linings shall be of an analysis intended for use in potable hot water service, and the minimum thickness shall be 0.003 in. The lining shall be cured at a temperature and for a length of time suitable to assure continuity of lining and elimination of solvents. The water absorption rate of the cured lining shall be less than 2% by the method specified in ASTM D 570 shown in Appendix I. Surfaces to be epoxy lined must be cleaned to remove all scale, oxidation, oil, etc., prior to application of the lining.

(2) The use of amine or polyamine epoxy linings shall be limited to electric water heaters with immersion type elements, storage tanks, and those surfaces of fired water heaters that are not directly heated by the products of combustion.

(g) Thermally Sprayed Metallic Linings. The material used for linings shall be any copper or copper alloy of sprayable quality. Prior to coating, the interior surfaces of the vessel or vessel parts shall be cleaned by grit blasting. The minimum lining thickness shall be 0.005 in. The process shall be controlled to ensure that the temperature of the surface being coated does not exceed 650°F. A95

HLW-201 PRIMARY PRESSURE PARTS MATERIAL

(a) The materials used for shells, heads, flues, headers, or tubes shall be limited to those listed in Tables

RS-002880
1/17/02
NUECES

HLW-300, HLW-301, and HF-300.2. For plate material, a certificate of compliance or a material test report is required to verify that the chemical and mechanical properties are within the permissible range listed in Section II. Material in all other product forms shall be accepted as complying with its Section II specification when marked as required by (c) below. Material test reports shall be furnished by the mill of origin, except that any material that has lost its identification with a Section II specification, or that is ordered in small quantities, may be accepted, provided that it satisfies the provisions of HLW-202.

(b) If a welded assembly is furnished as a part to the Manufacturer of the completed water heater vessel, a Manufacturer's Partial Data Report Form HLW-7 shall be provided by the parts Manufacturer. The parts Manufacturer shall comply with all applicable requirements of Part HLW, including inspection by an Authorized Inspector.

(c) The material in (a) above shall have the identification marking required by the appropriate Section II specification. During subsequent steps in fabrication, a painted color identification or some other method acceptable to the Authorized Inspector shall be used for identification. The method used shall remain distinguishable, or be reapplied until the part(s) are affixed in their proper location on the water heater vessel, and until the material is part of a uniquely identifiable subassembly.

HLW-202 ACCEPTANCE OF UNIDENTIFIED OR SMALL QUANTITIES OF MATERIAL

If the identification of materials required by HLW-201(a) is unavailable, each piece of plate material, or each length of other material, shall be shown to meet the chemical requirements and mechanical properties ofthe Section II specification designated for the part for which the material is to be used. The material shall be subjected to all required tests of the Section II specification. The manufacturer of the completed vessel shall verify that the material complies with the designated specification.

Testing shall be as in HLW-202.1 and HLW-202.2.

HLW-202.1 Plate. The chemical check analysis and physical tests shall be made as required in the designated specification, with the following modification: when the direction of rolling is not definitely known, two tension specimens shall be taken at right angles to each other from a corner of each plate, and two bend specimens shall be taken from the middle of adjacent sides of each plate. One tension specimen and both bend specimens shall meet the specification requirements.

HLW-202.2 Tubes, Pipe, Rods, Bars, and Shapes. Each length of tube, pipe, rod, bar, or shape shall be subjected to a chemical check analysis and physical tests to show that all the material is identified with a given heat or heat treatment lot, and that the material complies with the chemical and physical requirements of the designated specification.

HLW-202.3 Marking and Test Report. When the identity of material with a designated specification has been established in accordance with HLW-202.1 or HLW-202.2, each piece of material (except as alternatively provided in the material specification for tubes, pipes, rods, bars, or shapes) shall be marked or identified by the manufacturer or the testing agency by any method acceptable to the Authorized Inspector, giving the designated specification number and grade or type, and a serial S-number identifying the particular lot of material. A suitable test report shall be furnished, properly filled out and certified by the manufacturer or testing agency. This report when accepted by the Authorized Inspector shall constitute authority to use the material.

HLW-203 MISCELLANEOUS PRESSURE PARTS MATERIAL

(a) Parts such as flanges, welding caps, welding necks, manhole frames, or manhole covers that are formed by casting, forging, rolling, or die forming, shall be constructed from materials permitted under Part HLW, or by an appropriate ANSI or manufacturer's standard to which the parts are made. Such parts shall be marked with the name or trademark of the manufacturer. Such markings shall be considered as the manufacturer's certification that the product complies with the material specification and is suitable for service at the rating indicated. A certificate of compliance or a material test report is not required.

(b) Carbon steel or cast iron pressure parts of small size, such as nozzles, handhole frames, or handhole covers for which it is difficult or impossible to obtain identified material, or that may be stocked and for which material test reports or certificates cannot be readily obtained, may be constructed from Section II materials other than those listed in Tables HLW-300, HLW-301, and HF-300.2, provided they are suitable for the application. The manufacturer who certifies

RS-002881
1/17/02
NUECES

the completed vessel shall satisfy himself that such parts are suitable for the welding, fabrication, service, and test conditions of its design. The use of such parts shall be subject to the acceptance of the Authorized Inspector.

HLW-204 FLANGES AND PIPE FITTINGS

The following standards covering flanges and pipe fittings are acceptable for use under Part HLW in accordance with the requirements of HLW-203. Pressure–temperature ratings shall be per the appropriate standard:

(a) ANSI B16.5, Flanges and Flanged Fittings

(b) ANSI B16.9, Factory-Made Wrought Steel Buttwelding Fittings

(c) ANSI B16.11, Forged Steel Fittings, Socket-Welding and Threaded

(d) ANSI B16.15, Cast Bronze Threaded Fittings

(e) ANSI B16.24, Bronze Pipe Flanges and Flanged Fittings

(f) ANSI B16.28, Wrought Steel Buttwelding Short Radius Elbows and Returns

(g) ANSI B16.42, Ductile Iron Pipe Flanges and Flanged Fittings

RS-002882
1/17/02
NUECES

ARTICLE 3
DESIGN

HLW-300 DESIGN

(a) Water heaters are limited to a maximum allowable working pressure of 160 psi and the maximum water temperature shall be 210°F. The maximum allowable working pressure for water heaters shall be not less than 100 psi.

(b) Water heaters may be fired with oil, gas, or electricity. Water heaters shall be designed using the rules in this Part.

(c) The temperature used in design shall not be less than the mean metal temperature (through the thickness) expected under operating conditions for the part considered. If necessary, the metal temperature shall be determined by computation using accepted heat transfer procedures or by measurements from equipment in service under equivalent operating conditions. Pressure parts subject to direct radiation and/or the products of combustion shall be designed to prevent flame impingement.

(d) Tables HLW-300 and HLW-301 give the maximum allowable stress values in tension for materials conforming to the tensile strengths listed therein when the design is based on the formulas given in this Article.

(e) The maximum allowable stress value in bending shall be $1\frac{1}{2}$ times that permitted in tension and the maximum allowable stress value in compression shall be two times that permitted in tension.

(f) The maximum allowable working pressure of the water heater shall be established in accordance with the proof test provision of HLW-500. As an alternative, stress values in Tables HLW-300 and HLW-301 may be used in calculations employing the available formulas when applicable to the geometry of the water heater or parts.

HLW-301 MINIMUM THICKNESSES

The minimum thickness of sheet or plate material used for heads or shells in any lined or unlined water heater vessel shall not be less than $\frac{1}{8}$ in.

HLW-302 SHELLS UNDER INTERNAL PRESSURE

When the provisions of HLW-501 to HLW-504 are not used, the thickness and the maximum allowable working pressure of cylindrical shells, pipe, and headers shall be determined in accordance with the following formulas:

$$t = \frac{PR}{SE - 0.6P}$$

$$P = \frac{SEt}{R + 0.6t}$$

where

P = maximum allowable working pressure, psi (but not less than 100 psi)
S = maximum allowable stress value from Tables HLW-300, HLW-301, HF-300.1, and HF-300.2, psi
t = required wall thickness, exclusive of liner, in.
R = inside radius of cylinder, in.
E = efficiency of longitudinal joint or ligament between tube holes, whichever is less. For welded joints, use the efficiency specified in HLW-402. For seamless shells, use $E = 1$.

HLW-303 BASIS FOR ESTABLISHING STRESS VALUES IN TABLES HLW-300 AND HLW-301

In the determination of allowable stress values for pressure parts, the Committee is guided by successful experience in service, insofar as evidence of satisfactory performance is available. Such evidence is considered equivalent to test data where operating conditions are known with reasonable certainty. In the evaluation of new materials, it is necessary to be guided to a certain

RS-002883
1/17/02
NUECES

TABLE HLW-300
MAXIMUM ALLOWABLE STRESS VALUES IN TENSION FOR LINED MATERIALS, ksi

Spec. No.	Grade	Nominal Composition	P-No.	Spec. Min. Tensile Strength, ksi	Notes	Max. Allowable Design Stress, ksi
SA-285 Plate	A	Plate, Carb. Stl.	1	45	. . .	11.2
	B	Plate, Carb. Stl.	1	50	. . .	12.5
	C	Plate, Carb. Stl.	1	55	. . .	13.7
SA-442	55	Plate, Carb. Stl. (C-Si)	1	55	. . .	13.7
SA-442	60	Plate, Carb. Stl. (C-Si)	1	60	. . .	15.0
SA-455	I & II	Plate, Carb. Stl. (C-Mn)	1	75	(5)	18.7
SA-455	I & II	Plate, Carb. Stl. (C-Mn)	1	73	(6)	18.2
SA-455	I & II	Plate, Carb. Stl. (C-Mn)	1	70	(7)	17.5
SA-285 Modified to Chem.					(3)	
AISI C-1012		0.10C to 0.15C	1	45	. . .	11.2
AISI C-1015		0.13C to 0.18C	1	50	. . .	12.5
AISI C-1023		0.20C to 0.25C	1	55	. . .	13.7
SA-414 Sheet	A	C	1	45	. . .	11.2
	B	C	1	50	. . .	12.5
	C	C	1	55	. . .	13.7
	D	C-Mn	1	60	. . .	15.0
	E	C-Mn	1	65	. . .	16.2
	F	C-Mn	1	70	. . .	17.5
	G	C-Mn	1	75	. . .	18.7
SA-414 Sheet Modified to Chem.					(3)	
AISI C-1012		0.10C to 0.15C	1	45	. . .	11.2
AISI C-1015		0.13C to 0.18C	1	50	. . .	12.5
AISI C-1023		0.20C to 0.25C	1	55	. . .	13.7
SA-36	. . .	C-Mn-Si	1	58	(1)	11.6
SA-105	1	Forging Carb. Stl. (C-Mn-Si)	1	60	. . .	15.0
SA-181	1	Forging Carb. Stl. (C-Si)	1	60	. . .	15.0
SA-53	A	Smls Carb. Stl. (C)	1	48	. . .	12.0
SA-53	B	Smls Carb. Stl. (C-Mn)	1	60	. . .	15.0
SA-106	A	Smls Carb. Stl. (C)	1	48	. . .	12.0
SA-106	B	Smls Carb. Stl. (C-Mn)	1	60	. . .	15.0
SA-106	C	Smls Carb. Stl. (C-Mn)	1	70	. . .	17.5
SA-53	A	ERW Carb. Stl. (C)	1	48	(2)	10.2
SA-53	B	ERW Carb. Stl. (C-Mn)	1	60	(2)	12.7
SA-135	A	ERW Carb. Stl. (C)	1	48	(2)	10.2
SA-135	B	ERW Carb. Stl. (C-Mn)	1	60	(2)	12.7
SA-178	A	ERW Carb. Stl. (C)	1	47	(2)(4)	10.0
SA-178	C	ERW Carb. Stl. (C)	1	60	(2)	12.7
SA-31	A	Bars & Stays, Carb. Stl.	1	45	. . .	9.0
SA-31	B	Bars & Stays, Carb. Stl.	1	58	. . .	11.6
SA-515	55	C-Si	1	55	. . .	13.7
	60	C-Si	1	60	. . .	15.0
	65	C-Si	1	65	. . .	16.2
	70	C-Si	1	70	. . .	17.5

RS-002884
1/17/02
NUECES

TABLE HLW-300 (CONT'D)
MAXIMUM ALLOWABLE STRESS VALUES IN TENSION FOR LINED MATERIALS, ksi

Spec. No.	Grade	Nominal Composition	P-No.	Spec. Min. Tensile Strength, ksi	Notes	Max. Allowable Design Stress, ksi
SA-516	55	C-Si	1	55	. . .	13.7
	60	C-Si	1	60	. . .	15.0
	65	C-Si	1	65	. . .	16.2
	70	C-Si	1	70	. . .	17.5
SA-675	45	Bars Carb. Stl. (C)	1	45	. . .	11.2
	50	Bars Carb. Stl. (C)	1	50	. . .	12.5
	55	Bars Carb. Stl. (C)	1	55	. . .	13.8
	60	Bars Carb. Stl. (C)	1	60	. . .	15.0
	65	Bars Carb. Stl. (C)	1	65	. . .	16.3
	70	Bars Carb. Stl. (C)	1	70	. . .	17.5

GENERAL NOTE:
Nonferrous material, if utilized for connections, etc., shall be in accordance with Table HF-300.2.

NOTES:
(1) These allowable stress values apply also to structural shapes.
(2) The stress value includes a joint factor of 0.85.
(3) For use only as shell plates, heads, tubesheets, or other surfaces to be glass lined.
(4) Tensile value in parentheses is expected minimum.
(5) For thickness up to 3/8 in., incl.
(6) For thickness over 3/8 in. to 0.580 in., incl.
(7) For thickness over 0.580 in. to 0.750 in., incl.

RS-002885
1/17/02
NUECES

TABLE HLW-301
MAXIMUM ALLOWABLE STRESS VALUES FOR MATERIALS IN TENSION FOR UNLINED WATER HEATERS, ksi

Spec. No.	Grade	Nominal Composition	P-No.	Spec. Min., Tensile Strength, ksi	Notes	Max. Allowable Design Stress, ksi (See HLW-303) Standard	Alternative
Plate							
Alloy Steel							
SA-240	304	Plate (18Cr–8Ni)	8	75	(2)(3)(6)	15.7	17.8(7)
	304L	Plate (18Cr–8Ni)	8	70	(2)(3)(6)	13.4	15.7(7)
	316	Plate (16Cr–12Ni–2Mo)	8	75	(2)(3)(6)	16.2	18.8(7)
	316L	Plate (16Cr–12Ni–2Mo)	8	70	(2)(3)(6)	13.3	15.7(7)
	439	18Cr–Ti	7, Gr. No. 2	65	(1)(3)(4)(5)	16.2	. . .
	S44400	18Cr–Mo	7, Gr. No. 2	60	(1)(2)(4)(5)	14.3	. . .
Tube							
Alloy Steel							
SA-213	304	Smls. Tb. (18Cr–8Ni)	8	75	(2)(3)(6)	15.7	17.8(7)
	304L	Smls. Tb. (18Cr–8Ni)	8	70	(2)(3)(6)	13.4	15.7(7)
	316	Smls. Tb. (16Cr–12Ni–2Mo)	8	75	(2)(3)(6)	16.2	18.8(7)
	316L	Smls. Tb. (16Cr–12Ni–2Mo)	8	70	(2)(3)(6)	13.3	15.7(7)
SA-249	304	Wld. Tb. (18Cr–8Ni)	8	75	(2)(3)(6)(8)	13.3	15.1(7)
	304L	Wld. Tb. (18Cr–8Ni)	8	70	(2)(3)(6)(8)	11.4	13.3(7)
	316	Wld. Tb. (16Cr–12Ni–2Mo)	8	75	(2)(3)(6)(8)	13.8	16.0(7)
	316L	Wld. Tb. (16Cr–12Ni–2Mo)	8	70	(2)(3)(6)(8)	12.0	13.3(7)
SA-268	XM-8	18Cr–Ti	7, Gr. No. 2	60	(1)(3)(4)(5)	15.0	. . .
	S44400	Smls. (18Cr–Mo)	7, Gr. No. 2	60	(1)(2)(4)(5)	14.3	. . .
	S44400	Wld. (18Cr–Mo)	7, Gr. No. 2	60	(1)(2)(4)(5)(6)	12.2	. . .
Bar							
Alloy Steel							
SA-479	304	Bar (18Cr–8Ni)	8	75	(2)(3)(6)	15.7	17.8(7)
	304L	Bar (18Cr–8Ni)	8	70	(2)(3)(6)	13.4	15.7(7)
	316	Bar (16Cr–12Ni–2Mo)	8	85	(2)(3)(6)	16.2	18.8(7)
	316L	Bar (16Cr–12Ni–2Mo)	8	70	(2)(3)(6)	14.1	15.7(7)
	XM-8	18Cr–Ti	7, Gr. No. 2	70	(1)(3)(4)(5)	16.6	. . .
	S44400	18Cr–Mo	7, Gr. No. 2	60	(1)(2)(4)(5)	14.3	. . .
Pipe							
Alloy Steel							
SA-312	304	Smls. Pp. (18Cr–8Ni)	8	75	(2)(3)(6)	15.7	17.8(7)
	304	Wld. Pp. (18Cr–8Ni)	8	75	(2)(3)(6)(8)	13.3	15.1(7)
	304L	Smls. Pp. (18Cr–8Ni)	8	70	(2)(3)(6)	13.4	15.7(7)
	304L	Wld. Pp. (18Cr–8Ni)	8	70	(2)(3)(6)(8)	11.4	13.3(7)
	316	Smls. Pp. (16Cr–12Ni–2Mo)	8	75	(2)(3)(6)	16.2	18.8(7)
	316	Wld. Pp. (16Cr–12Ni–2Mo)	8	75	(2)(3)(6)(8)	13.8	16.0(7)
	316L	Smls. Pp. (16Cr–12Ni–2Mo)	8	70	(2)(3)(6)	14.1	15.7(7)
	316L	Wld. Pp. (16Cr–12Ni–2Mo)	8	70	(2)(3)(6)(8)	12.0	13.3(7)

RS-002886
1/17/02
NUECES

TABLE HLW-301 (CONT'D)
MAXIMUM ALLOWABLE STRESS VALUES FOR MATERIALS IN TENSION FOR UNLINED WATER HEATERS, ksi

Spec. No.	Grade	Nominal Composition	P-No.	Spec. Min., Tensile Strength, ksi	Notes	Max. Allowable Design Stress, ksi (See HLW-303) Standard	Alternative
Forgings							
Alloy Steel							
SA-182	F304	Forg. (18Cr–8Ni)	8	75	(2)(3)(6)	15.7	17.8(7)
	F304L	Forg. (18Cr–8Ni)	8	70	(2)(3)(6)	13.4	15.4(7)
	316	Forg. (16Cr–12Ni–2Mo)	8	75	(2)(3)(6)	16.2	17.5(7)
	316L	Forg. (16Cr–12Ni–2Mo)	8	70	(2)(3)(6)	14.1	15.7(7)

NOTES:
(1) The maximum is $\frac{3}{8}$ in.
(2) The maximum thickness is $\frac{1}{2}$ in.
(3) The service temperature shall not exceed 210°F.
(4) Filler metal shall be Type 430 with a nominal molybdenum content of approximately 2%. The 300 series of chromium–nickel–iron filler metals shall not be used in welding vessels conforming to the requirements of Section IV.
(5) The welding processes employed in fabrication shall be limited to the gas tungsten arc welding process and the gas metal arc welding process. Shielding gas for the gas shielded metal arc process shall be argon or helium. Oxygen up to 2% may be added to the argon.
(6) Water heaters using this material are to be operated only on deionized water having a minimum specific resistivity of 1.0 MΩ/cm.
(7) Due to the relatively low yield strength of the austenitic stainless steel materials, these higher stress values were established at temperatures at which the short time tensile properties govern to permit the use of these alloys where slightly greater deformation is acceptable. These higher stress values exceed two-thirds but do not exceed 90% of the yield strength at temperature. Use of these stress values may result in dimensional changes due to permanent strain. These stress values are not recommended for flanges of gasketed joints or other applications where slight amounts of distortion can cause leakage or malfunction.
(8) The stress value includes a joint factor of 0.85.

RS-002887
1/17/02
NUECES

extent by the comparison of test information with similar data on successful applications of similar materials.

At any temperature below the creep range, the allowable stresses are established at no higher than the lowest of the following:

(1) ¼ of the specified minimum tensile strength at room temperature;

(2) ¼ of the tensile strength at temperature;

(3) ⅔ of the specified minimum yield strength at room temperature;

(4) ⅔ of the yield strength at temperature.

In Table HLW-301 for austenitic stainless steel materials, two sets of allowable stress values are provided. The higher values should be used only where slightly greater deformation is not in itself objectionable. The higher alternative allowable stresses are identified by a note. These stresses exceed two-thirds for austenitic stainless steel materials but do not exceed 90% of the minimum yield at temperature. These higher stresses are not recommended for the design of flanges and other strain sensitive applications.

HLW-305 BLANK UNSTAYED DISHED HEADS, PRESSURE ON CONCAVE SIDE

HLW-305.1 General. When the provisions of HLW-501 to HLW-504 are not used, the required thickness at the thinnest point after forming of ellipsoidal and torispherical heads under pressure on the concave side (plus heads) shall be computed by the appropriate formulas in this paragraph.

(a) Notations. The notations used in this paragraph are defined as follows:

t = required wall thickness, exclusive of liner, in.

P = maximum allowable working pressure, psi (but not less than 100 psi)

D = inside diameter of the head skirt; or inside length of the major axis of an ellipsoidal head; or inside diameter of a cone head at the point under consideration, measured perpendicular to the longitudinal axis, in.

S = maximum allowable stress value from Tables HLW-300, HF-300.1, and HF-300.2, psi

L = inside spherical or crown radius, in.

E = lowest efficiency of any joint in the head; use the efficiency specified in HLW-402. For seamless heads, use $E = 1$.

HLW-305.2 Ellipsoidal Heads. When the provisions of HLW-501 to HLW-504 are not used, the required thickness and the maximum allowable working pressure of a dished head of semiellipsoidal form, in which half the minor axis (inside depth of the head minus the skirt) equals one-fourth of the inside diameter of the head skirt, shall be calculated by the following formulas:

$$t = \frac{PD}{2SE - 0.2P}$$

$$P = \frac{2SEt}{D + 0.2t}$$

HLW-305.3 Torispherical Heads. When the provisions of HLW-501 to HLW-504 are not used, the required thickness and the maximum allowable working pressure of a torispherical head shall be calculated by the following formulas:

$$t = \frac{0.885PL}{SE - 0.1P}$$

$$P = \frac{SEt}{0.885L + 0.1t}$$

HLW-305.4 Inside Crown Radius of Unstayed Heads. The inside crown radius to which an unstayed formed head is dished shall be not greater than the outside diameter of the skirt of the head. The inside knuckle radius of a torispherical head shall be not less than 6% of the outside diameter of the skirt of the head but in no case less than three times the head thickness.

HLW-305.5 Hemispherical Heads. Because of the complexity of joint design, hemispherical heads are not permitted.

HLW-306 BLANK UNSTAYED DISHED HEADS, PRESSURE ON CONVEX SIDE

HLW-306.1 When the provisions of HLW-501 to HLW-504 are not used, unstayed dished heads with the pressure on the convex side shall have a maximum allowable working pressure equal to 60% of that for heads of the same dimension with the pressure on the concave side.

RS-002888
1/17/02
NUECES

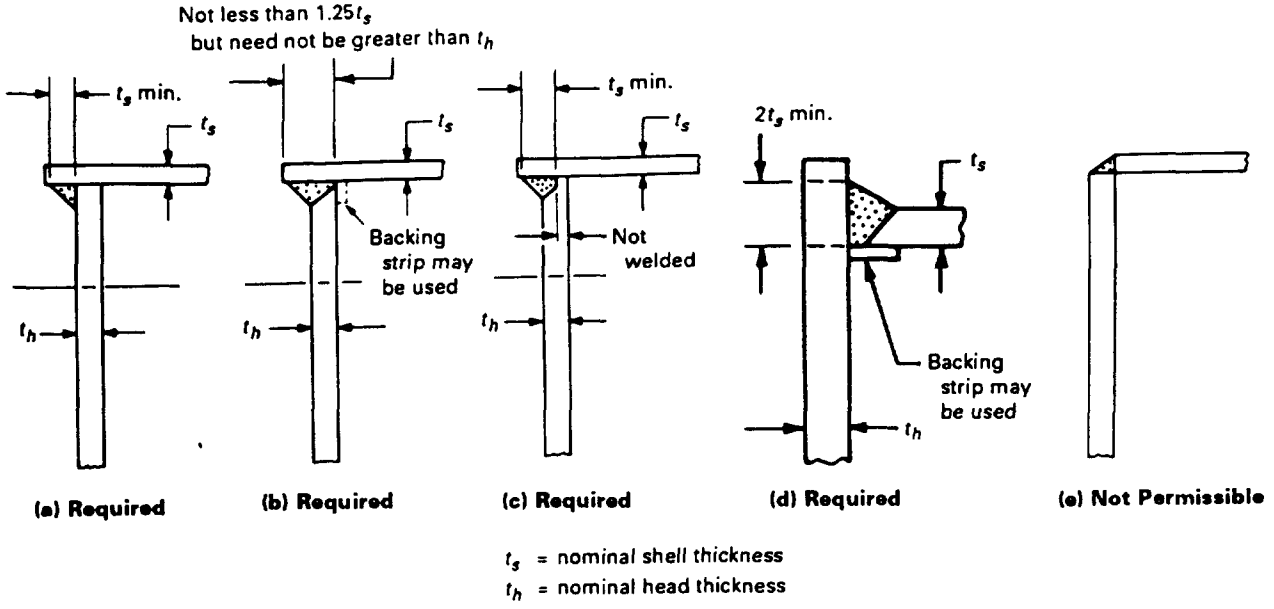

FIG. HLW-401.2 TYPICAL CORNER JOINTS

which use metal backing strips which remain in place are excluded.

(b) E = 80% for full penetration single-welded butt joints with backing strips other than those included in (a) above.

HLW-402.1 Joint Efficiencies for External Pressure Design. Joint efficiency E factors are not required to be used when the part is designed for external pressure only.

HLW-411 HEADS OR TUBESHEETS ATTACHED BY WELDING

Typical water heater welded joints are shown in Fig. HLW-411.

HLW-411.1 Flanged heads or tubesheets of water heaters attached by butt welding shall be in accordance with Fig. HLW-415, sketch (d) or (e).

HLW-411.2 Flanged heads or tubesheets of water heaters may be constructed by attaching an outwardly or inwardly flanged head or tubesheet to the shell by fillet welding, provided:

(a) inwardly flanged head or tubesheets are full fillet welded [see Fig. HLW-415, sketch (a)];

(b) the joint attaching an outwardly flanged head or tubesheet shall be in accordance with Fig. HLW-415, sketch (b) or (c).

HLW-413 TUBES ATTACHED BY WELDING

(a) The edge of the plate at the tubesheet hole may be beveled or recessed to a depth at least equal to the thickness of the tubes. Where the plate is beveled or recessed, the projection of the tubes beyond the tube sheet shall not exceed a distance equal to the tube thickness. The depth of any bevel or recess shall not be less than the tube thickness or $\frac{1}{8}$ in., whichever is greater, nor more than one-third of the tubesheet thickness.

(b) Where no bevel or recess is employed, tubes shall extend beyond the tubesheet not less than 1.5 times the tube thickness, nor more than 3 times the tube thickness, or $\frac{1}{4}$ in., whichever is greater [see Fig. HLW-413, sketch (d)].

(c) When openings are flanged for tubes as shown in Fig. HLW-413, sketch (a), (b), or (e), flanges shall extend parallel to the tube for a minimum distance equal to the tube thickness.

RS-002889
1/17/02
NUECES

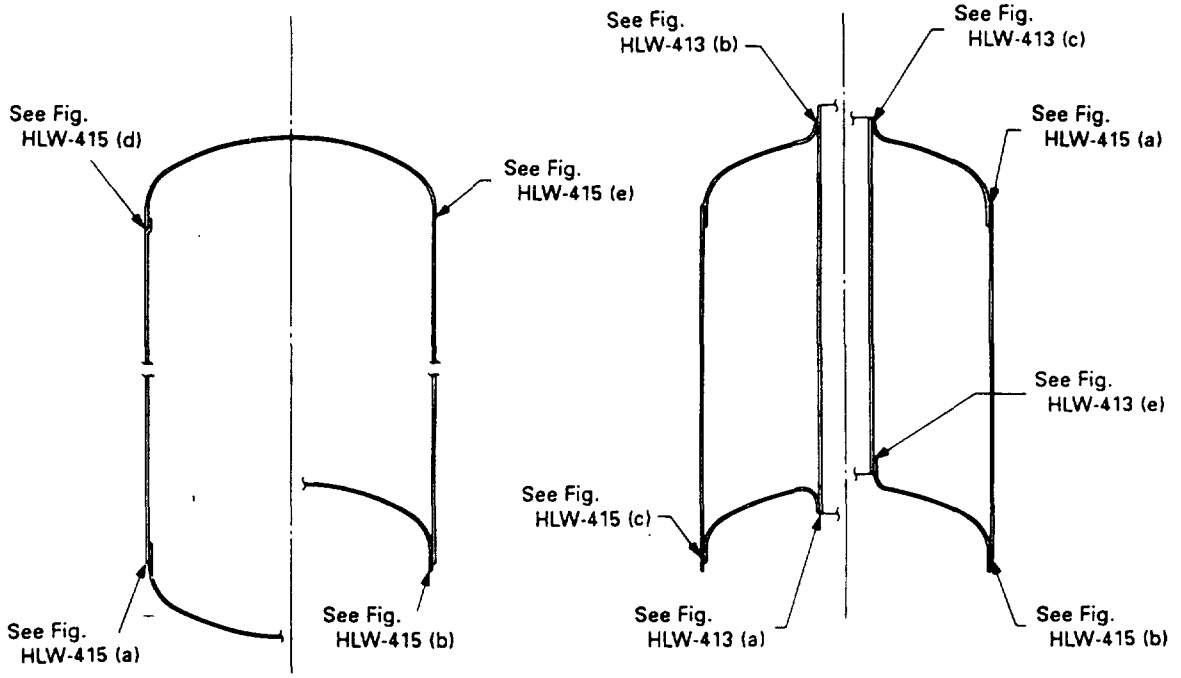

(a) Unstayed, Flanged and Dished Heads

(b) Flanged and Dished Heads With Flue Tube

FIG. HLW-411 TYPICAL WATER HEATER WELDED JOINTS

(d) Where exposed to gases of greater than 850°F, head flanges shall conform to the limitations of Fig. HLW-413.

(e) When the temperature of the gases is normally 850°F or less, the length of flange or tube may extend beyond the limits of Fig. HLW-413.

HLW-415 HEAD-TO-SHELL ATTACHMENTS

Ellipsoidal, torispherical, and other types of formed heads, concave or convex to the pressure shall have the following requirements as to skirt length.

(a) An ellipsoidal or torispherical head which is attached to a shell by a butt joint as shown in Fig. HLW-415, sketch (e), need not be provided with a skirt when the nominal head thickness does not exceed 1¼ times the nominal shell thickness. When the nominal head thickness exceeds 1¼ times the nominal shell thickness, a skirt shall be provided having a length not less than 3 times the nominal head thickness or 1½ in., whichever is smaller. When a skirt is used, it shall meet the requirements for shell thickness in HLW-301.

(b) Ellipsoidal or torispherical heads, concave or convex to pressure, that are to be fitted inside or over a shell (lap joint) shall have a skirt of at least 3 times the nominal head thickness, but in no case less than 1 in.

HLW-420 OPENINGS IN WELDS

Any type of opening that meets the requirements for reinforcement given in HG-321 may be located in a butt welded joint.

HLW-430 WELDED CONNECTIONS

HLW-430.1 Strength of Attachment Welds. Nozzles, other connections, and their reinforcement may be attached to a water heater by arc or gas welding. Sufficient welding shall be provided on either side of the line through the center of the opening parallel to the longitudinal axis of the shell to develop the strength of the shell as prescribed in HG-327 through shear or tension in the weld, whichever is applicable. The

RS-002890
1/17/02
NUECES

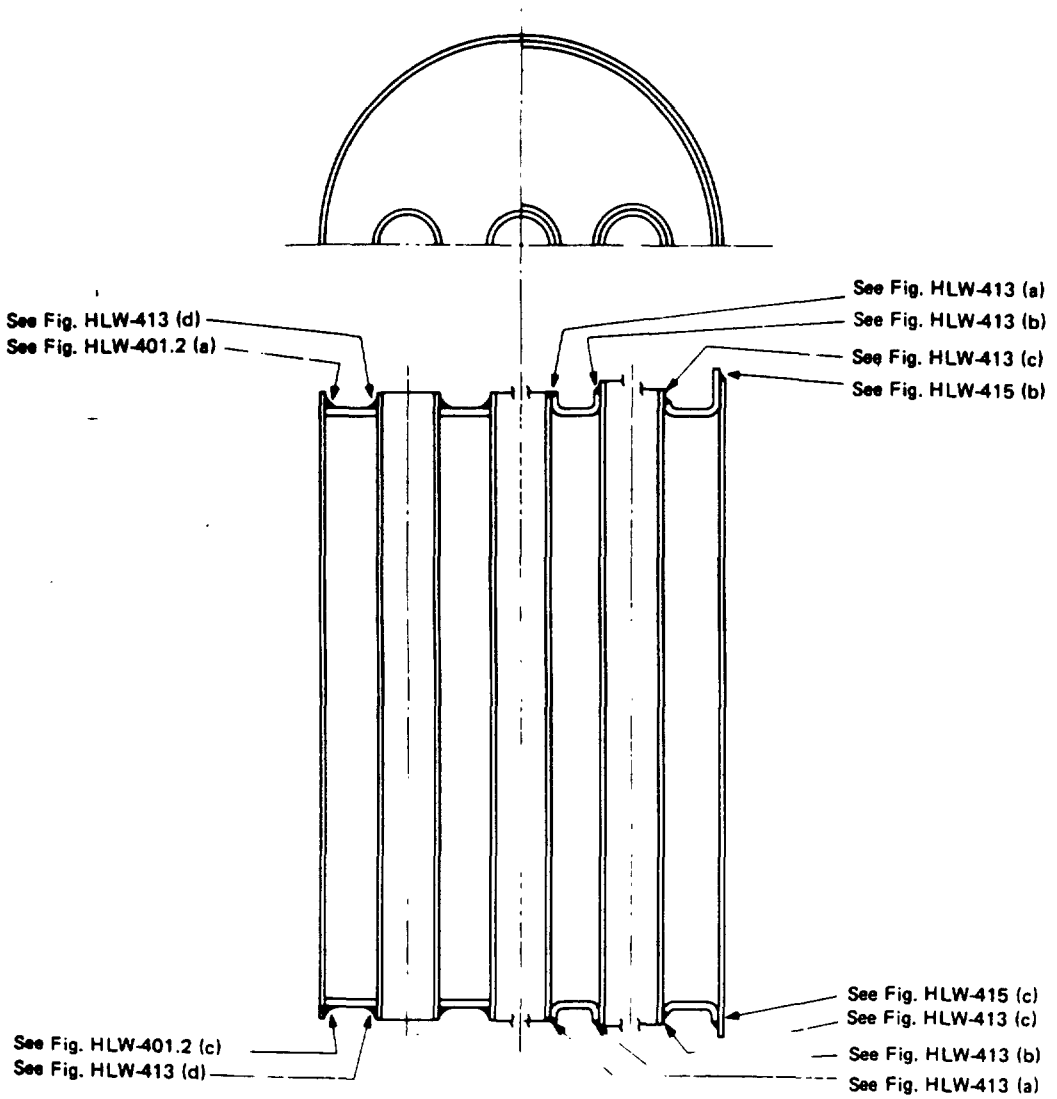

(c) Unflanged and flanged flat heads with multiple heads

FIG. HLW-411 TYPICAL WATER HEATER WELDED JOINTS (CONT'D)

RS-002891
1/17/02
NUECES

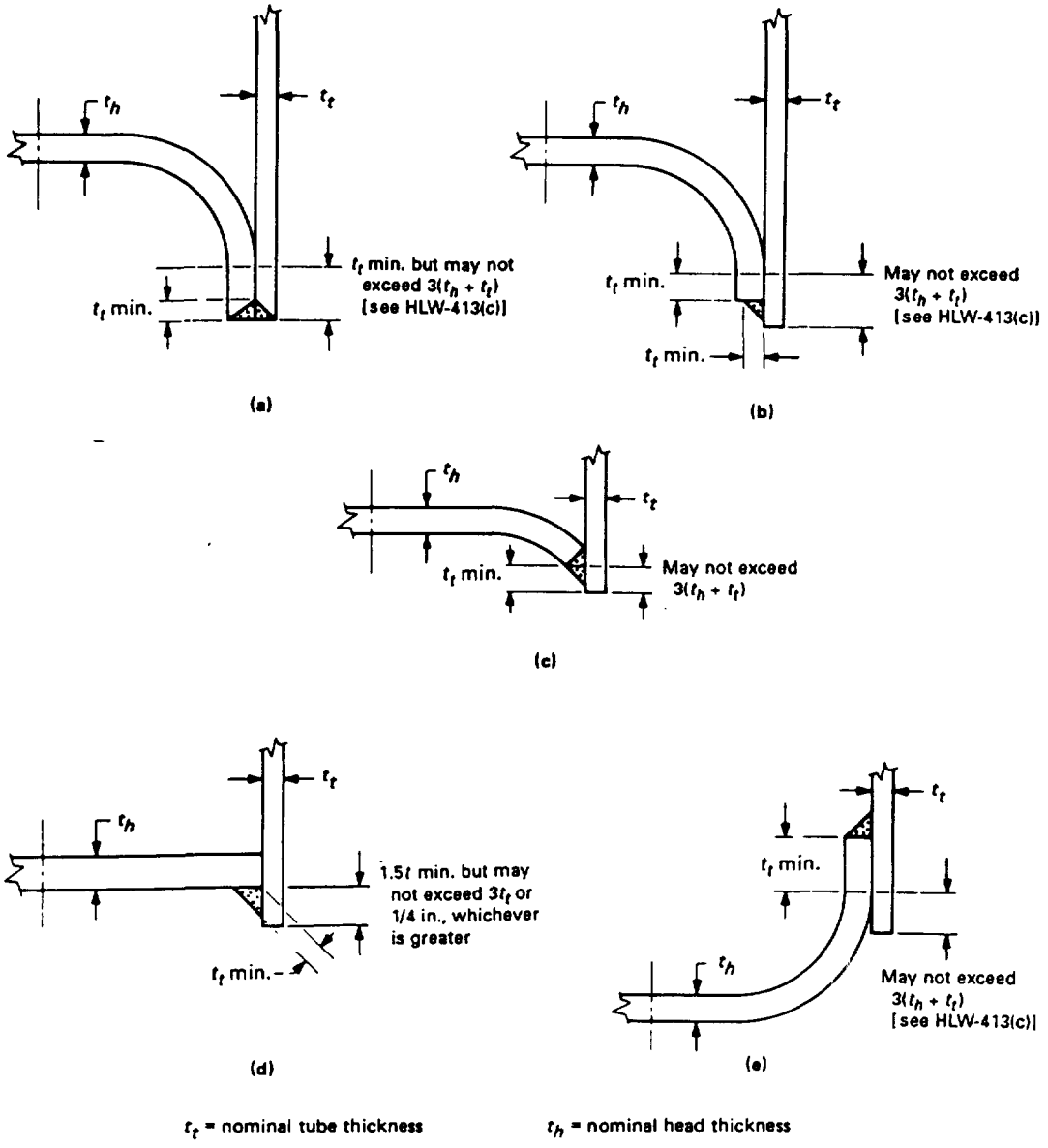

t_t = nominal tube thickness t_h = nominal head thickness

FIG. HLW-413 TUBES ATTACHED BY WELDING

RS-002892
1/17/02
NUECES

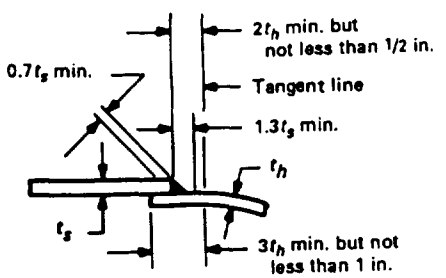

(a)

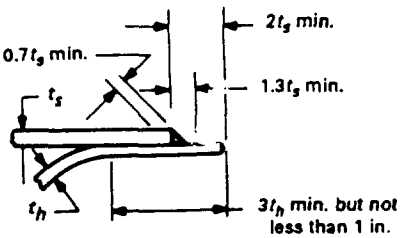

(b)

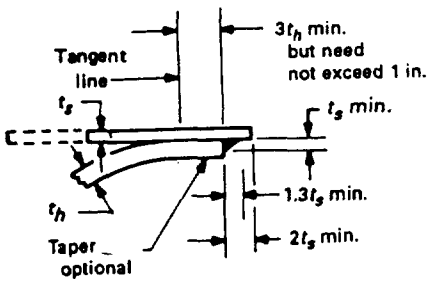

(c)

(a), (b), and (c) Single Fillet Lap Weld

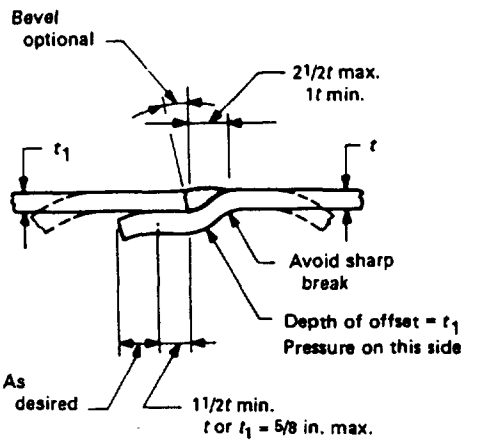

(d) Butt Weld With One Plate Edge Offset

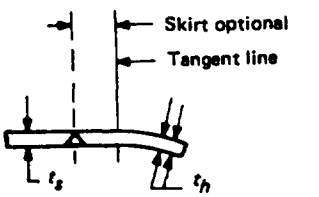

When t_h is equal to or less than $1.25t_s$

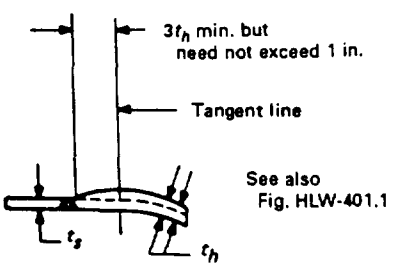

When t_h exceeds $1.25t_s$

(e) Butt Weld

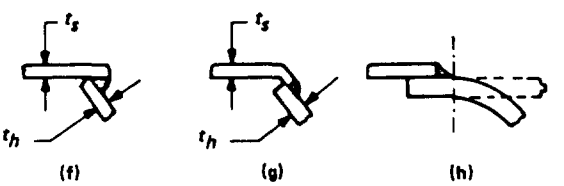

(f) (g) (h)

Details (f), (g), and (h) are not permissible.

t_s = Nominal shell thickness
t_h = Nominal head thickness

FIG. HLW-415 HEADS ATTACHED TO SHELLS

RS-002893
1/17/02
NUECES

strength of groove welds shall be based on the area subjected to shear or to tension. The strength of fillet welds shall be based on the area subjected to shear, computed on the minimum leg dimension. The inside periphery of a fillet weld shall be used in computing its length.

HLW-430.2 Stress Values for Weld Metal. The allowable stress values for groove and fillet welds and for shear in nozzle necks in percentages of stress values for the vessel material are as follows:

Nozzle wall	70%
Groove welded tension	74%
Groove weld shear	60%
Fillet weld shear	49%

NOTE: These values are obtained by combining the following factors: 87½% for combined end and side loading, 80% for shear strength, and the applicable joint efficiency factors.

HLW-431 MINIMUM REQUIREMENTS FOR ATTACHMENT WELDS

HLW-431.1 General. The location and minimum size of attachment welds for nozzles and other connections shall conform to the requirements in this paragraph.

(a) Notations. The notations used in this paragraph and in Fig. HLW-431.1 are defined as follows:

t = nominal thickness of shell or head, in.

t_n = nominal thickness of nozzle wall, in.

t_e = thickness of reinforcement element, in.

t_w = dimension of partial-penetration attachment welds (fillet, single-bevel, or single-J), measured as shown in Fig. HLW-431.1, in.

t_c = the smaller of ¼ in. or 0.7 t_n (inside corner welds may be further limited by a lesser length of projection of the nozzle wall beyond the inside face of the water heater wall)

$t_{min.}$ = the smaller of ¾ in. or the thickness of either of the parts joined by a fillet, single-bevel, or single-J weld, in.

t_1, t_2 = not less than ⅓ $t_{min.}$ or ¼ in. and $t_1 + t_2$ not less than 1¼ $t_{min.}$

HLW-431.2 Inserted Nozzles Without Added Reinforcement Elements

(a) Nozzles inserted into or through a hole cut in the shell and without additional reinforcement elements shall be attached by a full-penetration groove weld or by two partial penetration welds, one on each face of the shell. Permissible types of welds are shown in Fig. HLW-431.1, sketches (a) through (h).

(b) Backing strips shall be used with full penetration welds deposited from one side only when the shell thickness is over ⅜ in. or when complete joint penetration cannot be verified by visual inspection. The two partial penetration welds may be any desired combination of fillet, single-bevel, and single-J welds. The dimension t_w of each weld shall be not less than ¼ in. or $0.7t$ and their sum shall be not less than 1¼ t_{min} (see Fig. HLW-431.1).

HLW-431.3 Inserted Nozzles With Added Reinforcement. Inserted-type nozzles having added reinforcement in the form of one or more separate reinforcement plates shall be attached by welds at the nozzle neck periphery and at the outer edge of each reinforcement plate. The weld at the outer edge of each reinforcement plate shall be a fillet weld with a minimum throat dimension of ½ t_{min}.

HLW-431.4 Nozzles With Integral Reinforcement. Nozzles and other connections having integral reinforcement in the form of extended necks or saddle-type pads shall be attached by a full-penetration weld or by means of a fillet weld along the outer edge and a fillet, single-bevel, or single-J weld along the inner edge. The throat dimension of the outer weld shall be not less than ½ t_{min}. The dimension t_w of the inner weld shall be not less than 0.7 t_{min} [see Fig. HLW-431.1, sketch (h)].

HLW-431.5 Fittings With Internal Threads and Studded Pads. The attachment of internally threaded fittings and studded pads shall meet the following requirements.

(a) Except as provided for in (b) below, internally threaded fittings shall be attached by a full-penetration groove weld or by two fillet or partial penetration welds, one on each face of the water heater wall. The minimum weld dimensions shall be as shown in Fig. HLW-431.5, sketches (u), (v), (w), and (x).

(b) Internally threaded fittings or equivalent bolting pads not exceeding NPS 4 may be attached by a fillet weld deposited from the outside only, having the minimum dimensions shown in Fig. HLW-431.5, sketches (a) through (l). Fittings or studded pads which are not subject to a bending load and which will be plugged, such as those for thermostats, anode rods, drain valves, cleanouts, and heating elements, may be attached to water heater vessels having a thickness not greater than ⅜ in. by a fillet weld deposited from the outside only having the minimum dimensions shown in Fig. HLW-431.5, sketch (y). The maximum size opening in the water heater vessel shall be 5⅜ in. in

RS-002894
1/17/02
NUECES

APPENDIX A
APPROVAL OF NEW MATERIALS UNDER THE ASME BOILER AND PRESSURE VESSEL CODE

A-100 CODE POLICY

(a) It is the policy of the ASME Boiler and Pressure Vessel Committee to adopt for inclusion in Section II, Parts A and B, only such specifications as have been adopted by the American Society for Testing and Materials, and in Section II, Part C, only such specifications as have been adopted by the American Welding Society.

(b) It is expected that requests for Code approval will normally be for materials for which there is an ASTM or AWS specification. For other materials, a request shall be made to ASTM or AWS to develop a specification that can be presented to the Code Committee.

(c) It is the policy of the ASME Boiler and Pressure Vessel Committee to consider requests to adopt new materials only from boiler, pressure vessel, or nuclear power plant component Manufacturers or end users. Further, such requests should be for materials for which there is a reasonable expectation of use in a boiler, pressure vessel, or nuclear power plant component constructed to the rules of one of the Sections of this Code.

A-101 APPLICATION

(a) The inquirer shall identify to the Committee the Section or Sections and Divisions of the Code in which the new material is to be incorporated, the temperature range of application, whether cyclic service is to be considered, and whether external pressure service is to be considered. The inquirer shall identify all product forms, size ranges, and specifications for which incorporation is desired.

(b) The inquirer shall state whether or not the material is covered by patents, whether or not it is licensed, and if licensed, any limitations on its manufacture.

A-102 MECHANICAL PROPERTIES

(a) Together with the specification for the material, the inquirer shall furnish the Committee with adequate data on which to base design values for inclusion in the applicable tables. The data shall include values of ultimate tensile strength, yield strength, reduction of area, and elongation, at 100°F (or 50°C) intervals, from room temperature to 100°F (or 50°C) above the maximum intended use temperature, unless the maximum intended use temperature does not exceed 100°F. If adoption is desired at temperatures at which time-dependent behavior may be expected to control design values, data on these time-independent properties shall be provided to a temperature 100°F (50°C) above the temperature at which time-dependent behavior becomes significant. Any heat treatment that is required to produce the tensile properties should be fully described.

(b) If coverage is desired at temperatures at which time-dependent behavior may be expected, creep rate and creep rupture strength data of base metal and appropriate weld metals and weldments shall also be provided, at 100°F (or 50°C) intervals to 100°F (or 50°C) above the maximum intended use temperature.

(c) If adoption at temperatures below room temperature is requested, and if it is desired to take design advantage of increased strength at lower temperatures, data on the time-independent properties shall be provided at 100°F (or 50°C) intervals to and including the lowest intended use temperature.

(d) Notch toughness data shall be provided for materials for which Code toughness rules would be expected

RS-002895
1/17/02
NUECES

to apply. The data shall include test results for the intended lowest service metal temperature and for the range of material thicknesses desired. For welded construction, the notch toughness data shall include the results of Code toughness tests for weld metal and heat-affected zone for weldments made by the intended welding processes.

(e) If the material is to be used in components that operate under external pressure, stress–strain curves (tension or compression) shall be furnished, at 100°F (or 50°C) intervals over the range of design temperatures desired. External pressure charts are based on the early portion (up to 1% strain) of the stress–strain curve. The stress–strain curve (not load versus extension) shall be determined using a Class B-2 or better accuracy extensometer as defined in ASTM E 83. Numerical data, when available, should be submitted. The data should include the original cross-sectional area of the test specimen and stress–strain curves with units marked on them.

(f) If the material is to be used in cyclic service and the construction Code in which adoption is desired requires explicit consideration of cyclic behavior, fatigue data shall also be furnished over the range of design temperatures desired.

(g) In general, for all mechanical properties, data shall be provided from at least three heats of material meeting all of the requirements of a specification for at least one product form for which adoption is desired, for each test at each test temperature. When adoption for both cast and wrought product forms is desired, data from at least three heats each of a wrought and of a cast product form shall be submitted. It is desired that the data represent all product forms for which adoption is desired. For product forms for which the properties may be size dependent, data from products of different sizes, including the largest size for which adoption is desired, shall be provided.

(h) Test methods employed shall be those referenced in or by the material specifications, or shall be appropriate ASTM test methods or recommended practices for the properties tested.

(i) Information describing service experience in the temperature range contemplated will be useful to the Committee.

A-103 OTHER PROPERTIES

The inquirer shall furnish to the Committee adequate data necessary to establish values for coefficient of thermal expansion, thermal conductivity and diffusivity, Young's modulus, shear modulus, and Poisson's ratio, when the construction Code in which adoption is desired requires explicit consideration of these properties. Data shall be provided over the range of temperatures for which the material is to be used.

A-104 WELDABILITY

The inquirer shall furnish complete data on the weldability of material intended for welding, including data on procedure qualification tests made in accordance with the requirements of Section IX. Welding tests shall be made over the full range of thickness in which the material is to be used. Pertinent information, such as postweld heat treatment required, susceptibility to air hardening, effect of welding procedure and heat-affected zone and weld metal notch toughness, and the amount of experience in welding the material shall be given.

A-105 PHYSICAL CHANGES

For new materials, it is important to know the structural stability characteristics and the degree of retention of properties with exposure at temperature. The influence of fabrication practices, such as forming, welding, and thermal treatment, on the mechanical properties, ductility, and microstructure of the material are important, particularly where degradation in properties may occur. Where particular temperature ranges of exposure or heat treatment, cooling rates, combinations of mechanical working and thermal treatments, fabrication practices, exposure to particular environments, etc., cause significant changes in the mechanical properties, microstructure, resistance to brittle fracture, etc., it is of prime importance to call attention to those conditions that should be avoided in service or in manufacture of parts or vessels from the material.

A-106 REQUESTS FOR ADDITIONAL DATA

The Committee may request additional data, including data on properties or material behavior not explicitly treated in the construction Code in which adoption is desired.

A-107 CODE CASE

The Code Committee will consider the issuance of a Code Case, to be effective for a period of 3 years,

RS-002896
1/17/02
NUECES

$A_3 = \text{leg}^2$

$= 0.337 \times 0.337 = \underline{0.114}$ sq in.

A_T = total reinforcement = 1.214 sq in.

$A_T > A$ (opening is reinforced)

(g) Load to Be Carried by the Welds (See HG-327.2)

$W = [(d_{on} \times t_r) - (2d_{in} - d_{on})(t - t_r)]\ S(\text{shell})$

$= [(4.50 \times 0.264) - (2.0 \times 3.826 - 4.50)$

$\times (0.437 - 0.264)]\ 11{,}000$

$= 7035$ lb

(h) Unit Stresses (See HW-730.2)

Shear in fillet weld $= 0.49 \times 11{,}000$

$= 5390$ psi $= S_s$

Tension in groove weld $= 0.74 \times 11{,}000$

$= 8140$ psi $= S_t$

Shear in nozzle wall $= 0.70 \times 11{,}000$

$= 7700$ psi $= S_n$

(i) Strength of Connection Elements (See HW-730.1)

(1) Fillet Weld in Shear

$\frac{\pi}{2} \times d_{on} \times \text{weld leg} \times S_s = 1.57 \times 4.5 \times 0.337 \times 5390$

$= 12{,}833$ lb

(2) Groove Weld in Tension

$\frac{\pi}{2} \times d_{on} \times t \times S_t = 1.57 \times 4.5 \times 0.437 \times 8140$

$= 25{,}100$ lb

(3) Nozzle Wall Shear

$\frac{\pi}{2} \times \text{mean nozzle diam.} \times t_n \times S_n$

$= 1.571 \times 4.163 \times 0.337 \times 7700$

$= 16{,}971$ lb

Possible paths of failure are:

(a) through (1) and (2) above with a strength of 37,933 lb;

(b) through (3) above with a strength of 29,804 lb.

Both paths are stronger than the required strength of 7035 lb.

RS-002897
1/17/02
NUECES

A95

APPENDIX E
TERMINOLOGY

E-100 TERMS RELATING TO DESIGN

Action, Popping, or Pop — The action of a safety or safety relief valve when it opens under steam pressure. The disk of the valve is designed so that the force of the steam lifting the disk is increased when the disk is lifted slightly off its seat. The increase in force accelerates the rising action of the disk to the wide open position at or near the opening pressure.

Blowdown — The difference between the opening and closing pressures of a safety or relief valve.

Boiler, Automatically Fired — A boiler equipped with a means of introducing heat or of causing fuel, whether solid, liquid, gaseous, or electric, to be introduced into the boiler or boiler furnace, the means being so regulated by the rate of flow, the generating pressure, or temperature of the boiler fluid or of a vessel or space being heated as to maintain a determined, desired condition within a designated tolerance.

Boiler, Electric, Resistance Heating Element Type — Electric boilers of the resistance heating element type are either:

(a) of a design where the electric resistance element is directly attached to the external surface of the pressure vessel; or

(b) an immersed type where the electric resistance element is inserted through an opening in the pressure vessel so that the element is in direct contact with the water.

Boiler, Horizontal-Return Tubular — A firetube boiler consisting of a cylindrical shell, with tubes inside the shell attached to both end closures. The products of combustion pass under the bottom half of the shell and return through the tubes.

Boiler, Hot Water Heating — A boiler designed to heat water for circulation through an external space heating system.

Boiler, Hot Water Supply — A boiler used to heat water for purposes other than space heating.

Boiler, Modular — A steam or hot water heating assembly consisting of a grouping of individual boilers called modules, intended to be installed as a unit. Modules may be under one jacket or may be individually jacketed.

Boiler, Steam Heating — A boiler designed to convert water into steam which is supplied to an external space heating system.

Bottom Blowoff Valve — A valve or cock located in the bottom blowoff connection of a boiler which, when opened, permits free passage of scale and sediment during the blowoff operation.

Column, Fluid Relief — That piping, connected to the top of a hot water heating boiler, which is provided for the thermal expansion of the water. It will connect to either an open or a closed expansion tank.

Drain Valve — A valve or cock located in a boiler connection which, when opened, will drain the lowest water space practicable.

Electric Boiler, Submerged Electrode Type — A submerged electrode type electric boiler incorporates a design wherein two or more metallic electrodes are directly suspended in the boiler water. When a source of electric power is connected to the electrodes, current will flow between the electrodes and through the water, thus raising the temperature of the water to produce steam.

Feedwater — Water introduced into a boiler during operation. Includes makeup and return condensate or return water.

Flue — Passage through which gases pass from the combustion chamber or furnace to the venting system.

Furnace — That part of a boiler in which combustion of fuel takes place or in which primary furnace gases are conveyed.

Gases, Primary Furnace — Gases in a zone where the anticipated temperature of the gas exceeds 850°F.

Joints, Swing — Threaded, flanged, welded, or brazed pipe and fittings so arranged that the piping system which they comprise, when connected to a boiler, can

RS-002898
1/17/02
NUECES

APPENDIX H
LIST OF ABBREVIATIONS AND ADDRESSES

ANSI	American National Standards Institute 11 West 42nd Street, 13th Floor, New York, NY 10036
ASHRAE	American Society of Heating, Refrigerating and Air Conditioning Engineers 1791 Tullie Circle NE, Atlanta, GA 30329
UL	Underwriters' Laboratories, Inc. 333 Pfingston Road, Northbrook, IL 60062
CGA	Canadian Gas Association 55 Scarsdale Road, Don Mills, Ontario, Canada M3B 2R3
NEC	National Electric Code NFPA 70 National Fire Protection Association International Batterymarch Park, Quincy, MA 02269
AGA	American Gas Association 1515 Wilson Blvd., Arlington, VA 22209 American Gas Association Laboratories 8501 East Pleasant Valley Road, Cleveland, OH 44131

RS-002899
1/17/02
NUECES

APPENDIX I
SPECIFICATION FOR TEST METHOD FOR WATER ABSORPTION OF PLASTICS

SD-570

(Identical to ASTM Specification D 570-81(Reapproved 1988))

1. Scope

1.1 This test method covers the determination of the relative rate of absorption of water by plastics when immersed. The test method is intended to apply to the testing of all types of plastics, including cast, hot-molded, and cold-molded resinous products, and both homogeneous and laminated plastics in rod and tube form and in sheets 0.13 mm (0.005 in.) or greater in thickness.

1.2 The values stated in SI units are to be regarded as the standard. The values stated in parentheses are for information purposes only.

1.3 This standard may involve hazardous materials, operations, and equipment. This standard does not purport to address all of the safety problems associated with its use. It is the responsibility of the user of this standard to establish appropriate safety and health practices and determine the applicability of regulatory limitations prior to use.

2. Referenced Document

2.1 *ASTM Standard:*

D 647 Design of Molds for Test Specimens of Plastic Molding Materials

3. Significance and Use

3.1 The test method for rate of water absorption has two chief functions: first, as a guide to the proportion of water absorbed by a material and consequently, in those cases where the relationships between moisture and electrical or mechanical properties, dimensions, or appearance have been determined, as a guide to the effects of exposure to water or humid conditions on such properties; and second, as a control test on the uniformity of a product. This second function is particularly applicable to sheet, rod, and tube arms when the test is made on the finished product.

3.2 Comparison of water absorption values of various plastics can be made on the basis of values obtained in accordance with 7.1 and 7.4.

3.3 The moisture content of a plastic is very intimately related to such properties as electrical insulation resistance, dielectric losses, mechanical strength, appearance, and dimensions. The effect upon these properties of change in moisture content due to water absorption depends largely on the type of exposure (by immersion in water or by exposure to high humidity), shape of the part, and inherent properties of the plastic. With nonhomogeneous materials, such as laminated forms, the rate of water absorption may be widely different through each edge and surface. Even for otherwise homogeneous materials, it may be slightly greater through cut edges than through molded surfaces. Consequently, attempts to correlate water absorption with the surface area must generally be limited to closely related materials and to similarly shaped specimens: For materials of widely varying density, relation between water-absorption values on a volume as well as a weight basis may need to be considered.

RS-002900
1/17/02
NUECES

FORM HLW-6 MANUFACTURERS' DATA REPORT FOR WATER HEATERS OR STORAGE TANKS
As Required by the Provisions of the ASME Code Rules

1. Manufactured and certified by ① (name and address of manufacturer)

2. Manufactured for ② (name and address of purchaser)

3. Location of installation ③ (name and address)

4. Identification: ⑤ (mfr's. serial no.) (CRN) (drawing no.) (Nat'l. Bd. no.) ⑥ (year built)

5. The chemical and physical properties of all parts meet the requirements of material specifications of the ASME BOILER AND PRESSURE VESSEL CODE. The design, construction, and workmanship conform to Part HLW, Section IV ⑦ (year) ⑧ (addenda (date)) ⑨ (Code Case no.)

6. Shell: ⑩ (no.) ⑪ (mat'l. spec., gr.) ⑫ (thickness (in.)) ⑮ (lining) ⑭ (dia. (in.)) (length (ft. & in.) (overall))

7. Joints: ⑫ (long. (seamless, welded)) ⑬ (eff. (compared to seamless)) ⑫ (girth (seamless, welded)) (no. of shell courses)

8. Heads: ⑰

Location	Mat'l. Spec., Gr., Thickness	Crown Radius	Knuckle Radius	Elliptical Ratio	Hemispherical Radius	Flat Dia.	Side Pressure (concave, convex)
	⑪						

9. Tubesheet: ⑪ (mat'l. spec., gr.) Tubes (no.) (size (in.)) (length (ft. & in.) (overall)) ⑪ (mat'l. spec., gr.) (thickness (in.)) (rolled or welded)

10. Nozzles, inspection and safety valve openings: ㉕

Purpose (inlet, outlet, drain, etc.)	No.	Dia. or Size	Type	How Attached	Mat'l	Nom Thickness	Reinforcement Mat'l	Location
Handhole up to 3" x 4"			NA		NA		NA	
					⑪			

11. MAWP ㉞ (psi) MAX input ㉗ (Btu/hr. or kW) Max temp. ㉙ (°F) Hydro test ㉙ (psi)

12. Manufacturers' Partial Data Reports properly identified and signed by Commissioned Inspectors have been furnished for the following items of this report: ㉚ ㉛ (name of part, item no., mfr's name, identifion stamps)

13. Remarks:

This form (E00105) may be obtained from the Order Dept., ASME, 22 Law Drive, Box 2300, Fairfield, N.J. 07007-2300.

RS-002901
1/17/02
NUECES

FORM HLW-6 (Back)

CERTIFICATE OF SHOP COMPLIANCE

We certify that the statements made in this data report are correct and that all details of design, material, construction, and workmanship of this water heater or storage tank conform to Section IV of the ASME BOILER AND PRESSURE VESSEL CODE.

"HLW" Certificate of Authorization no. _____ expires _____, 19____.

Date _____ Name _____ Signed _____
(manufacturer that constructed and certified water heater or storage tank) (by representative)

CERTIFICATE OF SHOP INSPECTION

Constructed by _____ at _____.

I, the undersigned, holding a valid commission issued by the National Board of Boiler and Pressure Vessel Inspectors and/or the state or province of _____ and employed by _____ have inspected parts referred to as data items _____ and have examined Manufacturers' Partial Data Reports for items _____ and state that, to the best of my knowledge and belief, the manufacturer has constructed this water heater or storage tank in accordance with Section IV of the ASME BOILER AND PRESSURE VESSEL CODE.

By signing this certificate, neither the inspector nor his employer makes any warranty, expressed or implied, concerning the water heater or storage tank described in this Manufacturers' Data Report. Furthermore, neither the inspector nor his employer shall be liable in any manner for personal injury or property damage or a loss of any kind arising from or connected with this inspection.

Date _____ Signed _____ Commissions _____
(Authorized Inspector) (Nat'l Bd (incl endorsements) state, prov and no.)

RS-002902
1/17/02
NUECES

FORM HLW-8 MANUFACTURERS' MASTER DATA PROOF TEST REPORT FOR WATER HEATERS OR STORAGE TANKS

As Required by the Provisions of the ASME Code Rules, Section IV

1. Manufactured and certified by _____ (1) _____ (name and address)

2. Vessel type or model no. (HLW-500): _____ (4) _____

3. Vessel proof test data:

Vessel Parts	Description or Part No	Mat'l Spec., Gr Thickness According to Drawing	Specified Yield Strength, psi	Min Tensile, psi
(a)		(11) (42)		
(b)				
(c)				
(d)				
(e)				

4. Type of coating: _____ (lime wash or other brittle coating)

5. Test data to determine yielding:

Part Designation Yielding	Yielding Pressure by Flaking of Coating or by Strain Lines	Location of Yielding Whether Bending or Tension (indicate on sketch)
(70)	(71)	(72)

6. Yield strength of test specimens [HLW-502.1(c)]: (a) _____ (72) _____ psi (b) _____ psi (c) _____ psi Average _____ psi

7. Maximum allowable working pressure of vessel: _____ (66) _____ psi [determined by formulas in HLW-502.1(d)]

8. Examination data: (67)

(a) Test engineer _____

(b) Witness of test _____

(c) Date(s) of proof test _____

MANUFACTURER'S CERTIFICATION

We certify that the above data is correct and that the proof test procedure conforms with HLW-500 of Section IV of the ASME BOILER AND PRESSURE VESSEL CODE.

ASME Certificate of Authorization no _____ (31) _____ to use the "HLW" symbol expires _____, 19____.

Date _____ (32) _____ Certified to be true record _____ (authorized representative)* _____ (manufacturer)

*Note: Signature of manufacturer's designated responsible engineering representative is required

(33) PROOF TEST CERTIFICATE

I, the undersigned, holding a valid commission issued by the National Board of Boiler and Pressure Vessel Inspectors and/or the state or province of _____ (34) _____ and employed by _____ have witnessed the proof test and the procedures conforming to HLW-500 of Section IV of the ASME BOILER AND PRESSURE VESSEL CODE.

By signing this certificate neither the inspector nor his employer makes any warranty, expressed or implied, concerning the water heater or storage tank described in this manufacturers' proof test report. Furthermore, neither the inspector nor his employer shall be liable in any manner for any personal injury or property damage or a loss of any kind arising from or connected with the witnessing of this proof test.

Date _____ Signed _____ (Authorized Inspector) Commissions _____ (37) _____ (Nat'l Bd., state, province, and no.)

This form (E00107) may be obtained from the Order Dept., ASME, 22 Law Drive, Box 2300, Fairfield, N.J. 07007-2300.

RS-002903
1/17/02
NUECES

1995 Addenda

Date of Issue: December 31, 1995

ASME BOILER AND PRESSURE VESSEL CODE

An Internationally Recognized Code

SECTION IV
Heating Boilers

1995 Edition

Addenda to the 1995 Edition of the Code are issued in the form of replacement pages. Revisions, additions, or deletions are incorporated directly into the affected pages. It is advisable, however, that these title sheets and all replaced pages be retained for reference.

SUMMARY OF CHANGES

This is the first Addenda to be published to the 1995 Edition of Section IV.

Replace or insert the pages listed. Changes given below are identified on the pages by a margin note, **A95**, placed next to the affected area. The pages not listed are the reverse sides of the listed pages and contain no changes.

Page	*Location*	*Change*
iii	List of Sections	Updated to include new Subsection NH under Section III
v–vii	Foreword	(1) New fourth paragraph added (2) Eleventh and nineteenth paragraphs revised
xi–xx	Personnel	Revised in its entirety
3	Part HG Contents	Revised
7	HG-300.1	Last line corrected by Errata
15	Fig. HG-312.1	Title revised
16	Fig. HG-312.2	Title revised
22	Fig. HG-320	Baseline callouts on both diagrams revised
30	Table HG-340	(1) Under Plate Thickness, in., for $^{13}/_{32}$, second entry revised (2) Under Plate Thickness, in., for $^{11}/_{16}$, eighth entry revised
44	HG-402.8(a)	Revised
48	HG-510	Second paragraph revised
51	HG-530.1(a)(7)	Added

Copyright © 1995
THE AMERICAN SOCIETY OF MECHANICAL ENGINEERS
All Rights Reserved

RS-002904
1/17/02
NUECES

Page	Location	Change
51	HG-530.1(b)	First line revised
52	Fig. HG-530.2	Revised
	Fig. HG-530.3	Revised
53, 54	Fig. HG-530.4	Revised
	Fig. HG-530.5	Revised
	HG-530.2(b)(4)	Added
	HG-530.2(d)	(1) Subsubparagraphs (4) and (5) redesignated as (5) and (6), respectively (2) New subparagraph (4) added
	Fig. HG-530.6	Revised
	Fig. HG-530.7	Revised
60	HG-612	Revised
63, 67	HG-703.2(d)	Revised
	HG-709.1	Title and paragraph revised
	HG-709.2	Title and paragraph revised
	HG-709.3	(1) Title and designator deleted, and paragraph incorporated under revised HG-709.2 (2) Nomenclature for P_a, P_f, and P_o revised
	HG-709.4	(1) Redesignated as HG-709.3 (2) Title and paragraph revised
78	HF-301.1(c)	Subparagraph 1, 2 and 3 corrected by Errata
99	Fig. HW-715.1	Callout at top right-hand corner of sketch (b) revised
101	Fig. HW-731	Sketches (e-1) and (k) revised
126	HC-206	Last entry of textabular material revised
145	HLW-100(b)	Revised in its entirety
146	HLW-200(g)	Added
179	HLW-820	Revised
183	Appendices Contents	Updated to reflect A95
187	Table 2-100	(1) Under American National Standards, entry for B16.24 updated (2) Entry under ASME Performance Test Code revised
204	Appendix E	Title corrected by Errata
205	E-100	Definition for *Pressure, Maximum Allowable Working* revised
216	Appenix K	(1) Under Item ②, for H Code Symbol Stamp, third line revised (2) HV Code Symbol Stamp revised in its entirety
219	Guide to Manufacturer's Data Report Forms Contents	Appendix L added to title

RS-002906
1/17/02
NUECES

Page	Location	Change
222	Note No. 26	(1) X entered under Form H-3 and H-4 (2) Instruction revised
223–237		All right-hand page running heads revised to read Appendix L
224	Note No. 74	Added
226	Form H-2 (Back)	(1) Line 17 revised (2) Line 18 redesignated as 19 (3) New Line 18 added
228	Form H-3 (Back)	(1) Under Line 10, first two column heads revised (2) Under Line 10a, first two columns revised
230	Form H-4 (Back)	(1) Under Line 10, first two column heads revised (2) Under Line 10a, first two columns revised

NOTE:
Volume 37 of the Interpretations to Section IV of the ASME Boiler and Pressure Vessel Code follows the last page of this Addenda. The interpretations are not part of the Code or the Addenda and are included for information only.

RS-002906
1/17/02
NUECES

1995 ASME
BOILER AND PRESSURE VESSEL CODE

SECTIONS

I Rules for Construction of Power Boilers
II Materials
- Part A — Ferrous Material Specifications
- Part B — Nonferrous Material Specifications
- Part C — Specifications for Welding Rods, Electrodes, and Filler Metals
- Part D — Properties

III Subsection NCA — General Requirements for Division 1 and Division 2
III Division 1
- Subsection NB — Class 1 Components
- Subsection NC — Class 2 Components
- Subsection ND — Class 3 Components
- Subsection NE — Class MC Components
- Subsection NF — Supports
- Subsection NG — Core Support Structures
- Appendices

III Division 2 — Code for Concrete Reactor Vessels and Containments
IV Rules for Construction of Heating Boilers
V Nondestructive Examination
VI Recommended Rules for the Care and Operation of Heating Boilers
VII Recommended Guidelines for the Care of Power Boilers
VIII Rules for Construction of Pressure Vessels
- Division 1
- Division 2 — Alternative Rules

IX Welding and Brazing Qualifications
X Fiber-Reinforced Plastic Pressure Vessels
XI Rules for Inservice Inspection of Nuclear Power Plant Components

ADDENDA

Colored-sheet Addenda, which include additions and revisions to individual Sections of the Code, are published annually and will be sent automatically to purchasers of the applicable Sections up to the publication of the 1998 Code. The 1995 Code is available only in the loose-leaf format; accordingly, the Addenda will be issued in the loose-leaf, replacement-page format.

INTERPRETATIONS

ASME issues written replies to inquiries concerning interpretation of technical aspects of the Code. The Interpretations for each individual Section will be published separately and will be included as part of the update service to that Section. They will be issued semiannually (July and December) up to the publication of the 1998 Code. Interpretations of Section III, Divisions 1 and 2, will be included with the update service to Subsection NCA. Interpretations are not part of the Code or the Addenda.

CODE CASES

The Boiler and Pressure Vessel Committee meets regularly to consider proposed additions and revisions to the Code and to formulate Cases to clarify the intent of existing requirements or provide, when the need is urgent, rules for materials or constructions not covered by existing Code rules. Those Cases which have been adopted will appear in the appropriate 1995 Code Cases book: (1) Boilers and Pressure Vessels and (2) Nuclear Components. Supplements will be sent automatically to the purchasers of the Code Cases books up to the publication of the 1998 Code.

RS-002907
1/17/02
NUECES

FOREWORD

The American Society of Mechanical Engineers set up a committee in 1911 for the purpose of formulating standard rules for the construction of steam boilers and other pressure vessels. This committee is now called the Boiler and Pressure Vessel Committee.

The Committee's function is to establish rules of safety governing the design, fabrication, and inspection during construction of boilers and pressure vessels, and to interpret these rules when questions arise regarding their intent. In formulating the rules, the Committee considers the needs of users, manufacturers, and inspectors of pressure vessels. The objective of the rules is to afford reasonably certain protection of life and property and to provide a margin for deterioration in service so as to give a reasonably long, safe period of usefulness. Advancements in design and material and the evidence of experience have been recognized.

This Code contains mandatory requirements, specific prohibitions, and nonmandatory guidance for construction[1] activities. The Code does not address all aspects of these activities and those aspects which are not specifically addressed should not be considered prohibited. The Code is not a handbook and cannot replace education, experience, and the use of engineering judgment. The phrase *engineering judgment* refers to technical judgments made by knowledgeable designers experienced in the application of the Code. Engineering judgments must be consistent with Code philosophy and such judgments must never be used to overrule mandatory requirements or specific prohibitions of the Code.

The Code does not fully address tolerances. When dimensions, sizes, or other parameters are not specified with tolerances, the values of these parameters are considered nominal and allowable tolerances or local variances may be considered acceptable when based on engineering judgment and standard practices as determined by the designer.

[1] *Construction*, as used in this Foreword, is an all-inclusive term comprising materials, design, fabrication, examination, inspection, testing, certification, and pressure relief.

The Boiler and Pressure Vessel Committee deals with the care and inspection of boilers and pressure vessels in service only to the extent of providing suggested rules of good practice as an aid to owners and their inspectors.

The rules established by the Committee are not to be interpreted as approving, recommending, or endorsing any proprietary or specific design or as limiting in any way the manufacturer's freedom to choose any method of design or any form of construction that conforms to the Code rules.

The Boiler and Pressure Vessel Committee meets regularly to consider revisions of the rules, new rules as dictated by technological development, Code Cases, and requests for interpretations. Only the Boiler and Pressure Vessel Committee has the authority to provide official interpretations of this Code. Requests for revisions, new rules, Code Cases, or interpretations shall be addressed to the Secretary in writing and shall give full particulars in order to receive consideration and action (see Mandatory Appendix covering preparation of technical inquiries). Proposed revisions to the Code resulting from inquiries will be presented to the Main Committee for appropriate action. The action of the Main Committee becomes effective only after confirmation by letter ballot of the Committee and approval by ASME.

Proposed revisions to the Code approved by the Committee are submitted to the American National Standards Institute and published in *Mechanical Engineering* to invite comments from all interested persons. After the allotted time for public review and final approval by ASME, revisions are published annually in Addenda to the Code.

Code Cases may be used in the construction of components to be stamped with the ASME Code symbol beginning with the date of their approval by ASME.

After Code revisions are approved by ASME, they may be used beginning with the date of issuance shown on the Addenda. Revisions, except for revisions to material specifications in Section II, Parts A and B, become mandatory 6 months after such date of issuance, except for boilers or pressure vessels contracted for

RS-002908
1/17/02
NUECES

prior to the end of the 6 month period. Revisions to material specifications are originated by the American Society for Testing and Materials (ASTM), and are usually adopted by ASME. However, those revisions may or may not have any effect on the suitability of material, produced to earlier editions of specifications, for use in ASME construction. ASME material specifications approved for use in each construction Code are listed in the Appendices of Section II, Parts A and B. These Appendices list, for each specification, the latest ASTM edition adopted by ASME, and earlier and later editions considered by ASME to be identical for ASME construction.

Manufacturers and users of components are cautioned against making use of revisions and Cases that are less restrictive than former requirements without having assurance that they have been accepted by the proper authorities in the jurisdiction where the component is to be installed.

Each state and municipality in the United States and each province in Canada that adopts or accepts one or more Sections of the Boiler and Pressure Vessel Code is invited to appoint a representative to act on the Conference Committee to the Boiler and Pressure Vessel Committee. Since the members of the Conference Committee are in active contact with the administration and enforcement of the rules, the requirements for inspection in this Code correspond with those in effect in their respective jurisdictions. The required qualifications for an Authorized Inspector under these rules may be obtained from the administrative authority of any state, municipality, or province which has adopted these rules.

The Boiler and Pressure Vessel Committee in the formulation of its rules and in the establishment of maximum design and operating pressures considers materials, construction, methods of fabrication, inspection, and safety devices. Permission may be granted to regulatory bodies and organizations publishing safety standards to use a complete Section of the Code by reference. If usage of a Section, such as Section IX, involves exceptions, omissions, or changes in provisions, the intent of the Code might not be attained.

Where a state or other regulatory body, in the printing of any Section of the Boiler and Pressure Vessel Code, makes additions or omissions, it is recommended that such changes be clearly indicated.

The National Board of Boiler and Pressure Vessel Inspectors is composed of chief inspectors of states and municipalities in the United States and of provinces in Canada that have adopted the Boiler and Pressure Vessel Code. This Board, since its organization in 1919, has functioned to uniformly administer and enforce the rules of the Boiler and Pressure Vessel Code. The cooperation of that organization with the Boiler and Pressure Vessel Committee has been extremely helpful.

The Code Committee does not rule on whether a component shall or shall not be constructed to the provisions of the Code. The Scope of each Section has been established to identify the components and parameters considered by the Committee in formulating the Code rules. Laws or regulations issued by municipality, state, provincial, federal, or other enforcement or regulatory bodies having jurisdiction at the location of an installation establish the mandatory applicability of the Code rules, in whole or in part, within their jurisdiction. Those laws or regulations may require the use of this Code for vessels or components not considered to be within its Scope or may establish additions or deletions in that Scope. Accordingly, inquiries regarding such laws or regulations are to be directed to the issuing enforcement or regulatory body.

Questions or issues regarding compliance of a specific component with the Code rules are to be directed to the ASME Certificate Holder (Manufacturer). Inquiries concerning the interpretation of the Code are to be directed to the ASME Boiler and Pressure Vessel Committee. ASME is to be notified should questions arise concerning improper use of an ASME Code symbol.

The specifications for base materials given in Section II, Parts A and B are identical with or similar to those of the American Society for Testing and Materials. When reference is made in an ASME material specification to an ASTM specification for which a companion ASME specification exists, the reference shall be interpreted as applying to the ASME material specification. Specifications for welding materials given in Section II, Part C are identical with or similar to those of the American Welding Society. Not all materials included in the material specifications in Section II have been adopted for Code use. Usage is limited to those materials and grades adopted by at least one of the other Sections of the Code for application under rules of that Section. All materials allowed by these various Sections and used for construction within the scope of their rules shall be furnished in accordance with material specifications contained in Section II or referenced in Appendices A of Section II, Parts A and B except where otherwise provided in Code Cases or in the applicable Section of the Code. Materials covered by these specifications are acceptable for use in items covered by the Code Sections only to the degree indicated in the applicable Section. Materials for Code use should preferably be ordered, produced, and documented on this basis; Appendix A to Section II, Part A and Appendix A to Section II, Part B list editions of ASME and year dates

RS-002909
1/17/02
NUECES

of ASTM specifications that meet ASME requirements and which may be used in Code construction. Material produced to an ASME or ASTM specification with requirements different from the requirements of the corresponding specifications listed in Appendix A of Part A or Part B may also be used in accordance with the above, provided the material manufacturer or vessel manufacturer certifies with evidence acceptable to the Authorized Inspector that the corresponding requirements of specifications listed in Appendix A of Part A or Part B have been met. Material produced to an ASME or ASTM material specification is not limited as to country of origin.

When required by context in this Section, the singular shall be interpreted as the plural, and vice-versa; and the feminine, masculine, or neuter gender shall be treated as such other gender as appropriate.

Publication of the SI (Metric) Edition of the ASME Boiler and Pressure Vessel Code was discontinued with the 1986 Edition. Effective October 1, 1986, the SI Edition was withdrawn as an ASME Boiler and Pressure Vessel Code document.

RS-002910
1/17/02
NUECES

PERSONNEL

ASME Boiler and Pressure Vessel Committee Subcommittees, Subgroups, and Working Groups

As of December 31, 1994

MAIN COMMITTEE

D. A. Canonico, *Chair*
G. G. Karcher, *Vice Chair*
J. S. Brzuszkiewicz, *Secretary*
F. P. Barton
D. L. Berger
M. D. Bernstein
M. N. Bressler
W. J. Carter
R. J. Cepluch
T. M. Cullen
J. R. Farr
R. E. Feigel
J. G. Feldstein
M. Gold
O. F. Hedden
H. L. Hime
A. J. Justin
W. G. Knecht
D. F. Landers
J. R. MacKay
T. J. Mawson
T. G. McCarty
G. C. Millman
R. A. Moen
C. C. Neely
J. C. Parsell
R. F. Reedy
B. W. Roberts
F. J. Schaaf, Jr.
A. Selz
K. K. Tam

HONORS AND AWARDS COMMITTEE

J. R. Farr, *Chair*
W. G. Knecht, *Vice Chair*
U. D'Urso, *Secretary*
W. J. Carter
J. G. Feldstein
G. E. Fratcher
M. Gold
F. E. Gregor
E. C. Kistner, Jr.
J. R. MacKay
T. G. McCarty
T. P. Pastor
R. F. Reedy
A. J. Spencer

EXECUTIVE COMMITTEE (MAIN COMMITTEE)

G. G. Karcher, *Chair*
D. A. Canonico, *Vice Chair*
J. S. Brzuszkiewicz, *Secretary*
R. J. Cepluch
J. R. Farr
H. L. Hime
A. J. Justin
W. G. Knecht
J. R. MacKay
T. J. Mawson
G. C. Millman
R. F. Reedy
A. J. Spencer

HONORARY MEMBERS (MAIN COMMITTEE)

R. D. Bonner
R. J. Bosnak
P. M. Brister
H. M. Canavan
L. J. Chockie
J. S. Clarke
W. E. Cooper
W. D. Doty
G. E. Fratcher
R. M. Gibson
R. C. Griffin
E. J. Hemzy
E. L. Kemmler
E. C. Kistner, Jr.
E. M. Kloeblen
J. E. Lattan
J. LeCoff
J. L. Menson
F. N. Moschini
C. E. Rawlins
W. E. Somers
D. B. Wesstrom
L. P. Zick, Jr.

MARINE CONFERENCE GROUP

J. Tiratto, *Chair*
C. F. Banks
L. W. Douthwaite
J. L. Jones
G. F. Wright

CONFERENCE COMMITTEE

J. C. Parsell — Utah *(Chair)*
R. D. Reetz — North Dakota *(Vice Chair)*
A. J. Justin — National Board of Boiler and Pressure Vessel Inspectors *(Secretary)*
R. J. Aben, Jr. — Michigan
J. S. Aclaro — Los Angeles, California
J. Anderson — South Dakota
R. Barkdoll — Washington
F. P. Barton — Virginia
S. E. Brown — New Mexico
W. E. Brown — Kansas
R. R. Cate — Louisiana
L. Chase — N.W. Territories, Canada
A. Colvin, Jr. — Washington, D.C.
R. A. Coomes — Kentucky
J. Corcoran — Connecticut
M. H. Diehl, Jr. — Maryland
D. A. Douin — Illinois
E. D. Eastman — Newfoundland and Labrador, Canada
G. Ebeyer, Sr. — New Orleans, Louisiana
F. Ellis — New Hampshire
E. Everett — Georgia
F. Gardner — Delaware
T. G. Gottsch — Montana
J. W. Greenawalt, Jr. — Oklahoma
H. D. Hanrath — Ontario, Canada
W. J. Holmes — Chicago, Illinois
D. T. Jagger — Ohio
V. V. Kanable — Wisconsin
J. W. Kapherr — North Carolina
M. Kotb — Quebec, Canada
K. T. Lau — Alberta, Canada
J. A. Lemire — California
W. C. Lundine — Oregon
G. F. Mankel — Alaska
I. W. Mault — Manitoba, Canada
H. T. McEwen — Mississippi
A. W. Meiring — Indiana
E. J. Mossa — New Jersey
Y. Nagpaul — Hawaii
J. D. Payton — Pennsylvania
D. K. Peetz — Missouri
R. S. Pucek — Milwaukee, Wisconsin
T. E. Rennie — Arizona
D. E. Ross — New Brunswick, Canada
C. G. Schaber — Florida
M. Shuff — West Virginia
M. E. Skarda — Arkansas
D. A. Starr — Nebraska
R. P. Sullivan — Maine
N. Surtees — Saskatchewan, Canada
D. E. Tanner — Tennessee
R. B. West — Iowa
K. A. White — Nevada
T. F. Wickham — Rhode Island
R. A. Yeo — Nova Scotia, Canada

RS-002911
1/17/02
NUECES

Special Working Group on Review of Requirements From Global Perspectives (Main Committee)

K. Ennis, *Chair*
A. C. Ashton
G. G. Karcher
T. G. McCarty
J. J. Meyer
P. A. Molvie
R. T. Reedy

SUBCOMMITTEE ON POWER BOILERS (SC I)

J. R. MacKay, *Chair*
M. D. Bernstein, *Vice Chair*
J. Gonzalez, *Secretary*
S. G. Bankar
D. L. Berger
A. R. Faulkner
D. N. French
F. R. Gerety
T. E. Hansen
J. S. Hunter
S. R. Irvin, Sr.
W. L. Lowry
T. C. McGough
P. A. Molvie
D. K. Parrish
R. G. Presnak
R. D. Schueler, Jr.
R. V. Wielgoszinski
R. L. Williams
R. A. Yeo
L. W. Yoder

Subgroup on Care of Power Boilers (SC I)

C. J. Berg
D. O. Downey
W. H. Hall
N. Surtees
R. A. Yeo
J. R. Zahorsky

Subgroup on Piping (SC I)

D. L. Berger, *Chair*
T. E. Hansen, *Secretary*
M. D. Bernstein
A. J. Breugelmans
A. R. Faulkner
W. L. Lowry
T. C. McGough
R. G. Presnak
E. Whittle
L. W. Yoder

Subgroup on Design (SC I)

M. D. Bernstein, *Chair*
R. D. Schueler, Jr., *Vice Chair*
R. V. Wielgoszinski, *Secretary*
M. A. Farrugia
J. D. Fishburn
S. R. Irvin, Sr.
C. F. Jeerings
L. R. Meeder
P. A. Molvie
K. C. Morrison
A. Nassif
D. R. Palmer
N. Surtees

Subgroup on Materials (SC I)

J. S. Hunter, *Secretary*
A. R. Faulkner
D. N. French
J. F. Henry
J. T. Parsons
B. W. Roberts
J. M. Tanzosh

Subgroup on General Requirements (SC I)

T. C. McGough, *Chair*
M. D. Bernstein, *Vice Chair*
W. L. Lowry, *Secretary*
D. L. Berger
F. R. Gerety
J. M. Lyons
R. E. McLaughlin
D. K. Parrish
J. T. Pillow
R. F. Slack, Sr.
W. E. Somers
R. L. Williams
R. A. Yeo
L. W. Yoder

Subgroup on Fabrication and Examination (SC I)

L. W. Yoder, *Chair*
D. L. Berger, *Secretary*
R. W. Boyce
D. N. French
J. Hainsworth
T. E. Hansen
J. S. Kandola
R. E. McLaughlin
J. T. Pillow
M. E. Reese
R. D. Schueler, Jr.
R. F. Slack, Sr.
R. V. Wielgoszinski

SUBCOMMITTEE ON MATERIALS (SC II)

M. Gold, *Chair*
R. A. Moen, *Vice Chair*
I. R. Rodriguez, *Secretary*
A. P. Ahrendt
M. N. Bressler
A. Cohen
T. M. Cullen
R. Dirscherl
W. D. Doty
W. D. Edsall
A. R. Faulkner
M. H. Gilkey
J. J. Heger
J. F. Henry
B. B. Hood
G. C. Hsu
F. Masuyama
E. Michalopoulos
R. K. Nanstad
E. G. Nisbett
D. W. Rahoi
B. W. Roberts
R. R. Seeley
A. P. Seidler
C. E. Spaeder, Jr.
R. W. Swindeman
B. E. Thurgood
R. T. Webster
E. O. Woolridge
A. W. Zeuthen

Special Working Group on Non-ASTM Material Specifications (SC II)

R. Dirscherl, *Chair*
D. C. Agarwal
J. Cameron
W. D. Doty
M. Gold
H. Masahisa
T. F. Miskell
R. A. Moen
A. P. Povilonis
B. W. Roberts
R. D. Schueler, Jr.
R. R. Seeley
E. A. Steen
E. O. Woolridge

Subgroup on Ferrous Specifications (SC II)

A. W. Zeuthen, *Chair*
B. M. Dingman
W. D. Edsall
T. Graham
W. N. Holliday
E. A. Jonas
D. C. Krouse
J. F. Longenecker
W. C. Mack
E. G. Nisbett
J. T. Parsons
E. J. Rozic, Jr.
R. R. Seeley
E. O. Woolridge
R. H. Zong

Subgroup on Nonferrous Alloys (SC II)

R. T. Webster, *Chair*
J. W. Tackett, *Secretary*
D. C. Agarwal
W. R. Apblett
L. G. Coffee
A. Cohen
R. Dirscherl
M. H. Gilkey
B. B. Hood
G. C. Hsu
A. P. Seidler
E. Shapiro

RS-002912
1/17/02
NUECES

Subgroup on Strength, Ferrous Alloys (SC II)

B. W. Roberts, *Chair*
J. M. Tanzosh, *Secretary*
A. P. Ahrendt
W. R. Apblett
T. M. Cullen
R. J. Diletto
M. Gold
J. J. Heger
C. L. Hoffmann
T. Imoto
F. Masuyama
R. A. Moen
D. W. Rahoi
C. E. Spaeder, Jr.
R. W. Swindeman
B. E. Thurgood

Subgroup on Strength of Weldments (SC II) & (SC IX)

B. E. Thurgood, *Chair*
W. D. Doty
D. W. Rahoi
B. W. Roberts
C. Robino
C. E. Spaeder, Jr.
W. J. Sperko
J. M. Tanzosh

Subgroup on Toughness (SC II)

R. K. Nanstad, *Chair*
J. M. Barsom
D. A. Hansen
W. Hanzalek
A. Selz
R. D. Stout
R. S. Vecchio
S. Yukawa

Subgroup on External Pressure (SC II)

C. E. Spaeder, Jr., *Chair*
D. J. Green
D. S. Griffin
E. Michalopoulos
R. W. Mikitka
C. H. Sturgeon

SUBCOMMITTEE ON NUCLEAR POWER (SC III)

R. F. Reedy, *Chair*
C. J. Pieper, *Vice Chair*
C. A. Sanna, *Secretary*
J. P. Allen III
Y. Asada
J. R. Barbee
R. W. Barnes
J. N. Baysden
E. B. Branch
M. N. Bressler
F. C. Cherny
G. D. Cooper
W. D. Doty
F. R. Drahos
K. Ennis
B. A. Erler
E. F. Gerwin
K.-H. Hsu
R. M. Jessee
R. I. Jetter
J. W. Kapherr
W. G. Knecht
D. F. Landers
W. C. LaRochelle
T. J. Mawson
W. N. McLean
R. A. Moen
D. B. Nickerson
R. F. Perrin
R. E. Tome
K. R. Wichman

Special Working Group on Editing and Review (SC III)

M. N. Bressler, *Chair*
W. H. Borter, *Secretary*
J. R. Barbee
G. D. Cooper
B. A. Erler
M. W. Smith

Subgroup on General Requirements (SC III & 3C)

J. N. Baysden, *Chair*
R. E. Kelley, *Secretary*
R. C. Arthurs
J. R. Barbee
C. G. Beckham
B. H. Berg
B. W. Burak
K. Ennis
J. W. Kapherr
D. R. Kulla
W. C. LaRochelle
A. S. Laurenson
M. J. Meyer
L. C. Oakes
R. F. Perrin
U. Potapovs
C. A. Sward
G. M. Tolson

Working Group on Quality Assurance and Stamping (SG-GR) (SC III)

M. J. Meyer, *Chair*
R. C. Arthurs
B. H. Berg
R. F. Perrin
G. M. Tolson

Working Group on Duties and Responsibilities (SG-GR) (SC III)

J. R. Barbee, *Chair*
A. Appleton
J. W. Kapherr
M. R. Minick
L. C. Oakes
D. V. Walshe

Subgroup on Materials, Fabrication, and Examination (SC III)

R. M. Jessee, *Chair*
W. H. Borter, *Secretary*
C. W. Allison
B. G. Carlton
F. R. Drahos
G. M. Foster
G. B. Georgiev
J. E. Harris
C. L. Hoffmann
R. W. Jackson
C. C. Kim
W. G. Knecht
G. P. Milley
R. A. Moen
D. A. Olsson
C. J. Pieper
R. R. Seeley
N. M. Simpson
R. C. Soin
W. J. Sperko
K. B. Stuckey

Subgroup on Design (SC III)

R. W. Barnes, *Chair*
R. S. Hill III, *Secretary*
Y. Asada
G. J. Bohm
E. B. Branch
M. N. Bressler
C. W. Bruny
W. G. Brussalis, Jr.
J. R. Cole
G. D. Cooper
R. P. Deubler
N. W. Edwards
H. D. Hanrath
R. W. Haupt
B. Jarman
D. F. Landers
L. A. Loziuk
W. N. McLean
S. E. Moore
D. B. Nickerson
E. C. Rodabaugh
B. L. Silverblatt
G. C. Slagis
J. D. Stevenson
S. W. Tagart, Jr.
J. H. Wawrzeniak
K. R. Wichman
R. Wray

Special Working Group on Dynamic Analysis (SG-D) (SC III)

M. K. Au-Yang
R. D. Blevins
G. J. Bohm
D. L. Caldwell
P.-Y. Chen
A. Hadjian
J. B. Mahoney
A. E. Meligi
F. J. Moody
S. W. Tagart, Jr.
J. Wallach

Special Working Group on Faulted Conditions (SG-D) (SC III)

G. J. Bohm, *Chair*
P. L. Anderson
M. Hartzman
W. S. LaPay
H. Lockert
P. R. Olson
R. F. Perry
J. Wallach

RS-002813
1/17/02
NUECES

Working Group on Vessels (SG-D) (SC III)

G. D. Cooper, *Chair*
C. W. Bruny
T. K. Burr, Sr.
G. A. Deaver
N. W. Edwards
W. J. Heilker
F. P. Hill, Jr.
T. M. Khan
M. W. Kinnaird
O. Maekawa
K. A. Manoly
A. Merend
W. Z. Novak
P. K. Shah
H. S. Thornton
R. E. Tome

Working Group on Piping (SG-D) (SC III)

G. C. Slagis, *Chair*
T. M. Adams
G. A. Antaki
L. H. Geraets
A. B. Glickstein
R. W. Haupt
R. S. Hill III
R. D. Hookway
R. B. Jenkins
M. Z. Khlafallah
G. T. Kitz
P.-T. Kuo
D. F. Landers
J. C. Minichiello
S. E. Moore
D. B. Nickerson
O. Oyamada
R. D. Patel
E. C. Rodabaugh
M. S. Sills
E. A. Wais

Working Group on Pumps (SG-D) (SC III)

D. B. Nickerson, *Chair*
W. A. Barham
C. S. Boster
H. L. Brammer
P. Burchett
R. B. Camper
R. Corman
R. E. Cornman, Jr.
J. G. Dudiak
M. Higuchi
L. P. Kuah
J. W. Leavitt
R. A. Schussler
D. B. Spencer, Jr.
H. Tafarrodi
G. K. Vaghasia
J. H. Wawrzeniak

Working Group on Valves (SG-D) (SC III)

W. N. McLean, *Chair*
E. A. Bake
I. L. Beltz
R. R. Brodin
R. J. Kiessel
W. G. Knecht
R. Koester
J. J. McGavin
S. N. Shields
H. R. Sonderegger
J. C. Tsacoyeanes
R. G. Visalli
J. R. Zahorsky

Working Group on Component Supports (SG-D) (SC III)

R. P. Deubler, *Chair*
U. S. Bandyopadhyay
F. J. Birch
M. N. Bressler
R. D. Ciatto
J. R. Cole
R. M. Dulin, Jr.
J. C. Finneran, Jr.
L. H. Geraets
R. W. Haupt
T. O. Karppinen
T. C. LaCroix
A. S. Laurenson
A. Lee
R. J. Masterson
A. E. Meligi
A. N. Nguyen
H. Noreen, Jr.
G. M. Quinn
J. R. Stinson

Working Group on Core Support Structures (SG-D) (SC III)

J. T. Land, *Chair*
R. H. Hansen
K. B. Larsen
J. F. Mullooly
B. L. Silverblatt

Working Group on FRP Pipe (SG-D) (SC III)

L. A. Loziuk, *Chair*
F. R. Gerety
A. B. Glickstein

Working Group on Administration (SG-D) (SC III)

E. B. Branch, *Chair*
R. W. Barnes
R. S. Hill III
G. J. Bohm
G. D. Cooper
R. P. Deubler
W. N. McLean
D. B. Nickerson
R. Wray

Subgroup on Pressure Relief (SC III)

F. C. Cherny, *Chair*
R. J. Doelling
S. F. Harrison, Jr.
K. Ijzerman
W. M. Jakubowski
E. M. Petrosky
D. J. Scallan
C. M. Schroepfer
M. W. Smith
A. L. Szeglin
J. R. Zahorsky

Subgroup on Elevated Temperature Construction (SC III)

R. I. Jetter, *Chair*
C. C. Bigelow
C. R. Brinkman
C. L. Hoffmann
K.-H. Hsu
C. C. Schultz, Jr.
B. E. Thurgood

Subgroup on Containment Systems for Spent Fuel and High Level Waste Transport Packagings (SC III)

E. F. Gerwin, *Chair*
C. A. Sanna, *Secretary*
H. H. Chung
K. Goldmann
R. M. Jessee
R. H. Jones
W. H. Lake
R. W. Lambert
H. W. Lee
R. D. McGuire
R. E. Nickell
D. J. Nolan
D. T. Raske
T. Saegusa
H. Smith
K. B. Sorenson
J. D. Stevenson
W. W. Teper
P. Turula
N. Urabe
C. R. Witt
S. Yukawa

Working Group on General Requirements (SG-NUPACK) (SC III)

K. Goldmann, *Chair*
C. R. Witt

Working Group on Material (SG-NUPACK) (SC III)

S. Yukawa, *Chair*
D. J. Green
H. W. Lee
J. T. Martin
P. McConnell
M. W. Schwartz
K. B. Sorenson
M. P. Walsh

Working Group on Design (SG-NUPACK) (SC III)

J. D. Stevenson, *Chair*
A. G. Eggers
R. Glass
C. A. Miller
R. E. Nickell
W. W. Teper
P. Turula
H. H. Woo

Working Group on Fabrication and Examination (SG-NUPACK) (SC III)

R. H. Smith, *Chair*
R. M. Jessee
R. D. McGuire
D. T. Raske
A. J. Spencer
M. A. Whitney

RS-002814
1/17/02
NUECES

JOINT ACI-ASME COMMITTEE ON CONCRETE COMPONENTS FOR NUCLEAR SERVICE (SC-3C)

B. A. Erler, *Chair*
D. Poulis, *Secretary*
D. G. Adams
J. P. Allen III
J. F. Artuso
R. M. Attar
A. C. Eberhardt
J. Gutierrez
D. J. Haavik
D. C. Jeng
T. E. Johnson
G. R. Murphy
R. G. Oesterle
M. B. Parks
S. F. Putman
B. B. Scott
R. E. Shewmaker
J. D. Stevenson
R. N. White
A. Y. C. Wong

Subgroup on Materials, Construction, and Examination (SC-3C)

D. J. Haavik, *Chair*
J. P. Allen III
J. F. Artuso
R. M. Attar
B. A. Erler
J. Gutierrez
D. C. Jeng
G. R. Murphy

Subgroup on Design (SC-3C)

B. B. Scott, *Chair*
D. G. Adams
A. C. Eberhardt
T. E. Johnson
R. G. Oesterle
M. B. Parks
S. F. Putman
R. E. Shewmaker
J. D. Stevenson
A. Y. C. Wong

SUBCOMMITTEE ON HEATING BOILERS (SC IV)

F. P. Barton, *Chair*
R. B. Duggan, *Vice Chair*
P. A. Reddington, *Secretary*
G. E. Fratcher
J. W. Greenawalt, Jr.
W. L. Haag, Jr.
W. M. Hiddleston
J. D. Hoh
S. R. Irvin, Sr.
K. M. McTague
P. A. Molvie
R. I. Mullican
E. A. Nordstrom
J. L. Seigle
D. E. Tanner
S. V. Voorhees
R. H. Weigel
R. V. Wielgoszinski
J. I. Woodworth
T. L. Bedeaux, Alternate

Subgroup on Care and Operation of Heating Boilers (SC IV)

R. I. Mullican, *Chair*
J. W. Greenawalt, Jr.
S. R. Irvin, Sr.
F. M. Lucas
K. M. McTague
P. A. Molvie
D. E. Tanner
R. H. Weigel
T. F. Wickham
T. L. Bedeaux, Alternate

Subgroup on Water Heaters (SC IV)

G. E. Fratcher, *Chair*
W. L. Haag, Jr., *Vice Chair*
J. W. Greenawalt, Jr.
D. M. Hanning
W. M. Hiddleston
S. R. Irvin, Sr.
F. M. Lucas
K. M. McTague
R. I. Mullican
D. E. Tanner
E. Wenczl
E. L. West

Subgroup on Cast Iron Boilers (SC IV)

K. M. McTague, *Chair*
R. B. Duggan
R. H. Weigel
J. I. Woodworth
T. L. Bedeaux, Alternate

Subgroup on Welded Boilers (SC IV)

P. A. Molvie, *Chair*
E. A. Nordstrom
J. L. Seigle
R. F. Slack, Sr.
C. R. Starke
R. P. Sullivan
R. V. Wielgoszinski

SUBCOMMITTEE ON NONDESTRUCTIVE EXAMINATION (SC V)

T. G. McCarty, *Chair*
H. C. Graber, *Vice Chair*
U. D'Urso, *Secretary*
A. S. Birks
B. H. Clark, Jr.
B. E. Foster
O. F. Hedden
G. W. Hembree
F. B. Kovacs
W. C. McGaughey
R. D. McGuire
R. Paillaman
C. N. Sherlock
D. A. Starr
J. P. Sunukjian
D. A. White

Subgroup on Radiography (SC V)

G. W. Hembree, *Chair*
J. E. Batey
N. Y. Faransso
B. E. Foster
F. B. Kovacs
C. N. Sherlock

Subgroup on Ultrasonics (SC V)

R. Paillaman, *Chair*
W. T. Clayton
O. F. Hedden
P. J. Herbert
J. F. Manning
R. W. McClung
W. C. McGaughey
F. J. Sattler
M. L. Shakinovsky
J. C. Spanner, Sr.

Subgroup on Acoustic Emission (SC V)

D. A. White, *Chair*
B. H. Clark, Jr.
N. O. Cross
P. M. Horrigan
J. F. Manning
J. R. Mitchell
J. C. Spanner, Sr.

Subgroup on General Requirements and Surface Examination (SC V)

H. C. Graber, *Chair*
A. S. Birks
W. G. Blankenship
B. H. Clark, Jr.
R. M. Jessee
L. C. Ludwig
J. R. MacKay
R. D. McGuire
J. P. Sunukjian

SUBCOMMITTEE ON PRESSURE VESSELS (SC VIII)

J. R. Farr, *Chair*
T. P. Pastor, *Vice Chair*
A. J. Roby, *Secretary*
A. P. Ahrendt
V. Bogosian
S. M. Caldwell
W. J. Carter
R. J. Cepluch
S. C. Cyr
R. M. Elliott
R. E. Feigel
J. G. Feldstein
G. E. Fratcher
J. Hainsworth
H. L. Hime
M. J. Houle
W. S. Jacobs
G. G. Karcher
G. B. Komora
K. T. Lau
R. W. Mikitka
U. R. Miller
K. Mokhtarian
C. C. Neely
K. J. Schneider
A. Selz
J. R. Sims, Jr.
A. M. Smolen
A. J. Spencer
E. A. Steen
K. K. Tam
E. L. Thomas, Jr.

RS-002916
1/17/02
NUECES

Special Working Group on Heat Transfer Equipment (SC VIII)

U. R. Miller, *Chair*
C. F. Andreone
D. E. Bolt
S. M. Caldwell
T. K. Haldas
W. G. Jandrasits
G. G. Karcher
R. Mahadeen
J. R. McCutchen
F. Osweiller
R. K. Rothenbucher
J. E. Soehrens
A. I. Soler
W. A. Treff
S. Yokell
R. P. Zoldak

Special Working Group on High Pressure Vessels (SC VIII)

J. R. Sims, Jr., *Chair*
M. Weinstock, *Secretary*
L. P. Antalffy
J. E. Baxter
R. C. Biel
T. B. Boyd
D. J. Burns
P. N. Chaku
E. L. Danfelt
R. E. Feigel
D. M. Fryer
J. F. Harvey
J. L. Heck, Jr.
A. H. Honza
V. T. Hwang
M. M. James
D. P. Kendall
A. K. Khare
S. C. Mordre
G. J. Mraz
L. K. Ohlsson
E. H. Perez
E. R. Sliwinski
A. M. Smolen
W. L. Stewart
J. F. Sullivan
F. W. Tatar
D. A. Wells

Special Working Group on Toughness (SC VIII)

A. Selz, *Chair*
W. D. Doty
D. A. Hansen
W. S. Jacobs
G. G. Karcher
G. B. Komora
J. L. Mooney
C. C. Neely
M. D. Rana
J. W. Stokes

Subgroup on General Requirements (SC VIII)

R. M. Elliott, *Chair*
R. E. Tillberg, *Secretary*
A. P. Ahrendt
V. Bogosian
W. J. Carter
R. J. Cepluch
W. P. Crow
E. Everett
C. R. Good
D. B. Kadakia
J. C. Keenan
A. S. Mann
C. C. Neely
A. S. Olivares
K. J. Schneider
A. M. Smolen
A. J. Spencer

Subgroup on Materials (SC VIII)

J. Hainsworth, *Chair*
D. C. Agarwal
A. P. Ahrendt
R. Dirscherl
W. D. Doty
H. L. Hime
J. D. McLoughlin
E. E. Morgenegg
J. T. Parsons
D. W. Rahoi
K. K. Tam
B. K. Thakur
W. N. Van Riet
T. L. Warner
D. A. Wells

Subgroup on Design (SC VIII)

K. Mokhtarian, *Chair*
R. E. Knoblock, *Secretary*
M. R. Bauman
N. W. Edwards
J. R. Farr
J. A. Hayward
G. L. Hollinger
W. S. Jacobs
G. G. Karcher
G. B. Komora
R. W. Mikitka
U. R. Miller
T. P. Pastor
M. D. Rana
A. Selz
C. Shah
S. C. Shah
J. W. Stokes
K. K. Tam
E. L. Thomas, Jr.

Subgroup on Fabrication and Inspection (SC VIII)

E. A. Steen, *Chair*
K. Mokhtarian, *Vice Chair*
W. J. Bees
R. W. Boyce
J. R. Buller
S. C. Cyr
R. E. Feigel
H. E. Gordon
M. J. Houle
A. S. Lester III
W. R. Mikesell, Jr.
M. J. Rice
W. P. Webb

Working Group on Layered Vessels (SGFI) (SC VIII)

G. E. Fratcher, *Chair*
G. B. Komora
C. Shah
S. C. Shah
W. N. Van Riet

SUBCOMMITTEE ON WELDING (SC IX)

J. G. Feldstein, *Chair*
J. Labrador, *Secretary*
R. Barkdoll
D. A. Bowers
M. L. Carpenter
W. D. Doty
P. D. Flenner
M. J. Houle
R. A. Johnson
W. Lundy
R. D. McGuire
J. J. Meyer
A. H. Miller
B. R. Newmark
P. P. Norris
S. D. Reynolds, Jr.
W. K. Scattergood
L. J. Serre, Jr.
W. J. Sperko
G. W. Spohn III
M. J. Stanko
K. C. Taber
J. M. Tanzosh
R. R. Young

Subgroup on Materials (SC IX)

M. L. Carpenter, *Chair*
L. P. Connor
P. D. Flenner
R. M. Jessee
A. H. Miller
C. E. Sainz
C. E. Spaeder, Jr.
W. J. Sperko
M. J. Stanko
K. C. Taber
R. R. Young

Subgroup on General Requirements (SC IX)

B. R. Newmark, *Chair*
R. Barkdoll
P. C. Filean
R. M. Jessee
C. G. May
A. S. Olivares
C. E. Wainwright
R. A. Weiss
K. R. Willens

RS-002916
1/17/02
NUECES

Subgroup on Procedure Qualification (SC IX)

J. J. Meyer, *Chair*
R. K. Brown, Jr.
H. L. Helmbrecht
R. A. Johnson
A. H. Miller
P. P. Norris
A. S. Olivares
F. C. Ouyang
S. D. Reynolds, Jr.
M. J. Rice
W. K. Scattergood
L. J. Serre, Jr.
D. E. Smith
W. J. Sperko
T. C. Wiesner

Subgroup on Performance Qualification (SC IX)

J. J. Meyer, *Chair*
V. A. Bell
D. A. Bowers
L. P. Connor
P. D. Flenner
G. Herrmann
M. J. Houle
W. Lundy
R. D. McGuire
S. R. Nordman
P. P. Norris
W. K. Scattergood
G. W. Spohn III

Subgroup on Brazing (SC IX)

L. J. Serre, Jr., *Chair*
A. Artayet
M. L. Carpenter
A. H. Miller
C. Robino
K. C. Taber

SUBCOMMITTEE ON FIBER-REINFORCED PLASTIC PRESSURE VESSELS (SC X)

P. J. Conlisk, *Chair*
D. Eisberg, *Vice Chair*
A. J. Roby, *Secretary*
K. M. Agrawal
H. D. Barton
D. M. Bertelsman
F. Brown
J. L. Bustillos
T. W. Cowley
T. J. Fowler
S. V. Hoa
L. E. Hunt
J. C. Murphy
A. L. Newberry
K. C. Owen
J. A. Rolston

SUBCOMMITTEE ON NUCLEAR INSERVICE INSPECTION (SC XI)

O. F. Hedden, *Chair*
T. J. Mawson, *Vice Chair*
S. D. Weinman, *Secretary*
C. W. Allison
W. H. Bamford, Jr.
R. L. Beverly
J. M. Bloom
R. W. Boyce
C. D. Cowfer
D. D. Davis
T. N. Epps III
R. E. Gimple
F. Gregor
L. B. Gross
R. H. Hansen
K. Ida
R. D. Kerr
J. J. Lance
D. F. Landers
T. F. Lentz
E. Michalopoulos
G. C. Millman
C. R. Osman
G. J. Pitzl
P. C. Riccardella
L. Sage
F. J. Schaaf, Jr.
W. J. Shack
J. E. Staffiera
R. P. Sullivan
R. W. Swayne
R. J. Tamminga
J. C. Tobin
D. Poulis, Representative

Special Working Group on Plant Life Extension (SC XI)

F. Gregor, *Chair*
D. A. Graham
D. A. Jackson
M. P. Lintz
H. W. Massie, Jr.
J. T. McCumber
V. V. Miselis
A. K. Moonka
V. N. Shah
R. J. Tamminga

Special Working Group on Editing and Review (SC XI)

R. W. Swayne, *Chair*
R. L. Beverly
A. L. Bradshaw
L. B. Gross
V. H. Hight
M. P. Lintz
J. E. Staffiera
C. J. Wirtz

Working Group on General Requirements (SC XI)

R. J. Tamminga, *Chair*
A. T. Roberts III, *Secretary*
R. G. Edl
J. Goodman
D. A. Graham
L. B. Gross
C. A. Ireland
G. Johnson
R. K. Mattu
B. K. Walker
T. M. Zwick

Subgroup on Water-Cooled Systems (SC XI)

T. F. Lentz, *Chair*
K. Christian, *Secretary*
C. W. Allison
A. J. Birkle
W. J. Briggs
J. E. Charnley
D. D. Davis
A. F. Deardorff
R. L. Dyle
L. B. Gross
C. E. Jensen
S. D. Kulat
M. P. Lintz
C. V. Moore
F. J. Schaaf, Jr.
J. E. Staffiera
E. J. Sullivan, Jr.
C. Tahnk
R. J. Tamminga
F. Tehranchi
G. Wasilenko

Working Group on Inspection of Systems and Components (SG-WCS) (SC XI)

R. L. Dyle, *Chair*
J. C. Rivers, *Secretary*
G. L. Belew
T. W. Brombach
R. Fougerousse
D. A. Gallino
M. R. Hum
S. D. Kulat
J. T. Lindberg
M. P. Lintz
C. Pendleton
C. M. Ross
C. W. Tahnk
E. Throckmorton
R. A. West

Special Working Group on Low Temperature Heavy Water Reactors (SG-WCS) (SC XI)

C. D. Cowfer, *Chair*
C. A. Ireland
J. Morrison
J. C. Rivers
K. F. Schmidt
P. Vormelker
S. H. Zaidi

Working Group on Pressure Testing (SG-WCS) (SC XI)

F. J. Schaaf, Jr., *Chair*
G. P. Alexander
T. R. Bugelholl
R. J. Cimoch
A. C. Gladney
C. E. Jensen
W. N. Keisler
G. E. Rhedrick
E. J. Sullivan

Working Group on Implementation of Risk Based Examination (SC XI)

J. J. Lance, *Chair*
F. A. Simonen, *Secretary*
A. F. Deardorff
A. Hiser, Jr.
A. McNeill III
E. Michalopoulos
J. Muscara
J. H. Phillips
T. V. Vo
R. A. West

RS-002917
1/17/02
NUECES

Working Group on Concrete Containment (SG-WCS) (SC XI)

W. J. Briggs, *Chair*
B. Talmadge, *Secretary*
H. G. Ashar
T. L. Bradley
K. K. N. Chao
H. T. Hill
R. D. Hough
C. N. Krishnaswamy
D. Naus
C. G. Ranganath

Working Group on Metal Containment (SG-WCS) (SC XI)

J. E. Staffiera, *Chair*
R. N. Watson, *Secretary*
W. J. Briggs
K. K. N. Chao
N. W. Edwards
M. J. Ferlisi
R. W. Hammelmann
W. E. Norris
C. G. Ranganath
G. W. Robin

Subgroup on Gas-Cooled Systems (SC XI)

R. H. Hansen, *Chair*
M. Basol
J. F. Cook
M. P. Lintz
P. O'Brien

Subgroup on Liquid-Metal Cooled Systems (SC XI)

C. G. McCarger, *Chair*
W. L. Chase
S. Hattori
W. Kwant
L. R. Monson
W. J. Rowan
G. Seed
J. C. Tobin

Working Group on Liquid-Metal Reactor Covers (SG-LMCS) (SC XI)

W. L. Chase, *Chair*
S. Hattori
R. Hundal
W. Kwant
G. Seed

Subgroup on Evaluation Standards (SC XI)

W. H. Bamford, Jr., *Chair*
M. Kupinski, *Secretary*
J. M. Bloom
R. C. Cipolla
R. M. Gamble
T. J. Griesbach
P. J. Hijeck
K. Iida
Y Imamura
J. G. Merkle
S. Ranganath
P. C. Riccardella
D. A. Scarth
W. L. Server
P. Shewmon
C. A. Tomes
W. A. Van Der Sluys
K. R. Wichman
K. K. Yoon
S. Yukawa

Working Group on Operating Plant Criteria (SG-ES) (SC XI)

T. J. Griesbach, *Chair*
R. M. Gamble, *Secretary*
W. H. Bamford, Jr.
H. Behnke
A. F. Billy
W. C. Cliff
S. R. Gosselin
C. J. Hardin
S A. Henry
P. J. Hijeck
M. Kupinski
S. D. Leshnoff
A. G. Panagos
J. S. Panesar
W. E. Pennell
J. H. Phillips
S. Ranganath
S. T. Rosinski
W. L. Server
V. N. Shah
E. A. Siegel
F. A. Simonen
K. K. Yoon
S. Yukawa

Working Group on Flaw Evaluation (SG-ES) (SC XI)

R. C. Cipolla, *Chair*
J. M. Bloom, *Secretary*
W. H. Bamford, Jr.
M. Basol
N. W. Edwards
E. Friedman
T. J. Griesbach
D. N. Hopkins
K. Iida
Y. Imamura
M. Kupinski
H. S. Mehta
J. G. Merkle
J. S. Panesar
R. K. Qashu
P. P. Raju
S. Ranganath
D. A. Scarth
W. L. Server
F. A. Simonen
K. R. Wichman
G. M. Wilkowski
K. K. Yoon
S. Yukawa
A. Zahoor
V. A. Zilberstein

Working Group on Pipe Flaw Evaluation (SG-ES) (SC XI)

D. A. Scarth, *Chair*
G. M. Wilkowski, *Secretary*
W. H. Bamford, Jr.
J. M. Bloom
R. C. Cipolla
N. G. Cofie
S. K. Daftuar
G. H. De Boo
E. Friedman
D. N. Hopkins
K. Iida
H. S. Mehta
J. G. Merkle
J. S. Panesar
D. F. Quinones
K. K. Yoon
S. Yukawa
A. Zahoor
V. A. Zilberstein

Subgroup on Nondestructive Examination (SC XI)

R. L. Beverly, *Chair*
N. R. Bentley, *Secretary*
D. C. Adamonis
F. L. Becker
F. T. Carr
W. T. Clayton
J. F. Cook
C. D. Cowfer
F. J. Dodd
T. N. Epps III
D. O. Henry
M. R. Hum
S.-N. Liu
R. D. McGuire
M. C. Modes
C. R. Osman
J. C. Spanner, Jr.
J. C. Spanner, Sr.
C. J. Wirtz

Working Group on Procedure Qualification and Volumetric Examination (SG-NDE) (SC XI)

C. D. Cowfer, *Chair*
D. C. Adamonis
F. L. Becker
F. T. Carr
C. B. Cheezem
W. T. Clayton
R. A. Courtney
F. J. Dodd
T. N. Epps III
R. A. Kellerhall
M. C. Modes
M. Saporito
T. T. Taylor

Working Group on Personnel Qualification and Surface Visual and Eddy Current Examination (SG-NDE) (SC XI)

J. F. Cook, *Chair*
V. H. Hight, *Secretary*
B. L. Curtis
N. Economos
H. B. Garland
D. O. Henry
H. E. Houserman
J. J. McArdle III
R. D. McGuire
S. A. Redner
M. F. Sherwin
A. L. Smith
D. Spake
J. C. Spanner, Jr.
J. C. Spanner, Sr.
C. J. Wirtz

RS-002918
1/17/02
NUECES

Subgroup on Repairs, Replacements, and Modifications (SC XI)

R. E. Gimple, *Chair*
R. S. Lewis, *Secretary*
R. W. Boyce
M. N. Bressler
A. L. Finney
C. E. Hartz
R. A. Hermann
W. C. Holston
C. A. Ireland
R. D. Kerr
D. F. Landers
T. J. Mawson
M. S. McDonald
G. J. Pitzl
R. R. Stevenson
R. P. Sullivan
R. W. Swayne
S. Tobey
R. E. Tome
B. K. Walker
R. A. Yonekawa

Working Group on Welding and Special Repair Processes (SG-RR&M) (SC XI)

D. E. Waskey, *Chair*
R. E. Cantrell, *Secretary*
D. A. Delsignore
J. G. Feldstein
A. L. Finney
P. D. Fisher
A. J. Giannuzzi
R. A. Hermann
R. D. Kerr
B. R. Newton
P. P. Norris
J. E. O'Sullivan
S. Tobey
K. R. Willens

Working Group on Design Reconciliation (SG-RR&M) (SC XI)

W. C. Holston, *Chair*
R. E. Tome, *Secretary*
R. W. Boyce
J. Brunozzi
J. E. Chamley
E. V. Imbro
D. N. Irvine, Jr.
D. F. Landers
G. J. Pitzl
R. W. Swayne
F. Tehranchi
H. J. Thailer

Working Group on Responsibilities and Program Requirements (SG-RR&M) (SC XI)

R. A. Yonekawa, *Chair*
R. R. Stevenson, *Secretary*
C. E. Hartz
R. T. Huerter
R. L. Kurtz
R. S. Lewis
M. S. McDonald
U. Potapovs
A. J. Walcutt
C. N. Williams

Subgroup on Inservice Inspection of Core Support Structures (SC XI)

J. T. Lindberg, *Chair*
J. F. Mullooly, *Secretary*
H. Behnke
M. M. Behravesh
S. Chandra
C. L. Child
J. T. Land
W.-C. Liu
G. A. Lofthus
A. L. Smith
J. C. Tobin
S. M. Walker

SUBCOMMITTEE ON SAFETY VALVE REQUIREMENTS (SC-SVR)

E. C. Kistner, Jr., *Chair*
M. D. Bernstein, *Vice Chair*
U. D'Urso, *Secretary*
J. F. Ball
G. C. Batz
W. E. Brown
J. A. Cox
R. J. Doelling
R. G. Friend
H. I. Gregg
S. F. Harrison, Jr.
S. R. Irvin, Sr.
D. B. Kadakia
C. A. Neumann
M. Robinson
A. J. Spencer
J. C. Standfast
E. A. Steen
L. L. Thompson
J. A. West
G. T. Zirps
T. J. Ferrigan, Alternate

Subgroup on General Requirements (SC-SVR)

M. D. Bernstein, *Chair*
J. F. Ball
W. E. Brown
C. A. Neumann
J. W. Reynolds
M. Robinson
J. C. Standfast
L. L. Thompson

Subgroup on Testing (SC-SVR)

S. F. Harrison, Jr., *Chair*
J. A. Cox
V. M. DeLuca
W. F. Hart
S. R. Irvin, Sr.
D. M. Papa
D. J. Scallan
C. M. Schroepfer
G. T. Zirps

Subgroup on Design (SC-SVR)

R. G. Friend, *Chair*
G. C. Batz
J. Cahoon, Jr.
R. J. Doelling
H. I. Gregg
D. B. Kadakia
P. R. Sievert
A. J. Spencer
E. A. Steen
T. R. Tarbay
J. A. West

SUBCOMMITTEE ON DESIGN (SC-D)

W. J. Carter, *Chair*
R. I. Jetter, *Vice Chair*
P. A. Reddington, *Secretary*
R. W. Barnes
J. L. Hechmer
O. F. Hedden
R. W. Mikitka
K. Mokhtarian
R. J. O'Donnell
W. J. O'Donnell
R. D. Schueler, Jr.
M. P. Schwartz
A. Selz
R. E. Tome

Special Working Group on Bolted Flanged Joints (SC-D)

R. W. Mikikta, *Chair*
G. D. Bibel
G. Kharshafdjian
D. L. Kurle
E. Michalopoulos
J. R. Payne
R. W. Schneider
R. D. Schueler, Jr.
A. Selz

Subgroup on Openings (SC-D)

M. P. Schwartz, *Chair*
R. W. Mikitka, *Secretary*
M. R. Breach
V. T. Hwang
S. C. Lou
R. B. Luney
K. Mokhtarian
K. C. Morrison
D. R. Palmer
M. D. Rana
E. C. Rodabaugh
R. W. Schneider
G. M. Tunnell, Jr.

Subgroup on Design Analysis (SC-D)

J. L. Hechmer, *Chair*
T. P. Pastor, *Secretary*
P. J. Conlisk
A. G. Eggers
G. L. Hollinger
D. P. Jones
A. Kalnins
W. J. Koves
T.-H. Liu
O. Maekawa
A. Merend
T. V. Narayanan
E. R. Sliwinski
S. A. Swamy
E. L. Thomas, Jr.

RS-002919
1/17/02
NUECES

Subgroup on Elevated Temperature Design (SC-D)

R. I. Jetter, *Chair*
J. M. Corum, *Secretary*
C. Becht IV
C. R. Brinkman
R. D. Campbell
D. S. Griffin
C. Lawton
S. Majumdar
R. K. Mattu
L. C. S. Nieh
W. J. O'Donnell
C. C. Schultz, Jr.
L. K. Severud
D. F. Shaw
A. L. Snow
B. E. Thurgood

Subgroup on Fatigue Strength (SC-D)

W. J. O'Donnell, *Chair*
C. R. Brinkman
P. R. Donavin
J. A. Hayward
J. L. Hechmer
L. A. James
D. P. Jones
G. Kharshafdjian
C. Lawton
M. J. Manjoine
A. Merend
H. H. Ziada

SUBCOMMITTEE ON BOILER AND PRESSURE VESSEL ACCREDITATION (SC-BPVA)

A. J. Spencer, *Chair*
A. J. Justin, *Vice Chair*
J. P. Millman, *Secretary*
D. W. Anacki
V. A. Bell
M. B. Doherty
D. A. Douin
P. D. Edwards
R. M. Elliott
C. E. Ford
J. J. Greene
R. C. Howard
S. R. Irvin, Sr.
M. L. Sisk
V. Bogosian, Alternate
S. C. Cyr, Alternate
D. F. Everett, Alternate
J. R. Farr, Alternate
W. D. Greenlaw, Alternate
W. F. Hathaway, Alternate
V. V. Kanable, Alternate
W. C. LaRochelle, Alternate
A. S. Lester III, Alternate
K. M. McTague, Alternate
P. G. Scheckermann, Alternate
B. C. Turczynski, Alternate

SUBCOMMITTEE ON NUCLEAR ACCREDITATION (SC-NA)

W. G. Knecht, *Chair*
T. E. Quaka, *Vice Chair*
S. Wunsch, *Secretary*
C. W. Allison
J. R. Barbee
M. N. Bressler
S. DasGupta
G. Deily
R. E. Feigel
R. E. Gimple
J. E. Harris
M. Kotb
U. Potapovs
A. J. Spencer
R. R. Stevenson
G. M. Tolson
R. W. Boyce, Alternate
W. H. Chamberlain, Alternate
F. R. Drahos, Alternate
J. P. Ellenberger, Alternate
H. D. Hanrath, Alternate
S. F. Hatch, Alternate
A. J. Justin, Alternate
N. C. Kist, Alternate
W. C. LaRochelle, Alternate
L. C. Oakes, Alternate
H. B. Prasse, Alternate
J. M. Salasky, Alternate
D. J. Skoza, Alternate
R. E. Tilton, *Staff Representative*

RS-002920
1/17/02
NUECES

Article 7	**Installation Requirements**	
HG-700	Installation Requirements, All Boilers	62
HG-701	Mounting Safety and Safety Relief Valves	62
HG-703	Piping	62
HG-705	Feedwater and Makeup Water Connections	63
HG-707	Oil Heaters	63
HG-709	Provisions for Thermal Expansion in Hot Water Systems	63
HG-710	Stop Valves	67
HG-715	Bottom Blowoff and Drain Valves	68
HG-716	Modular Boilers	68
HG-720	Setting	69
HG-725	Methods of Support	69

Figures

HG-307	Some Acceptable Types of Unstayed Flat Heads and Covers	11
HG-309	Spherically Dished Steel Plate Covers With Bolting Flanges	13
HG-312.1	Chart for Determining Wall Thickness of Horizontal Cylindrical Furnaces When Constructed of Carbon Steel	15
HG-312.2	Chart for Determining Wall Thickness of Horizontal Cylindrical Furnaces When Constructed of Carbon Steel	16
HG-312.3	Acceptable Type of Ring Reinforced Furnace	17
HG-312.6	Connection Between Plain and Corrugated Furnace	19
HG-312.7	Acceptable Type of Semicircular Furnace Reinforcement	20
HG-320	Chart Showing Limits of Sizes of Openings With Inherent Compensation in Cylindrical Shells	22
HG-321	Chart for Determining Values of F	23
HG-326	Some Representative Configurations Describing the t_e Reinforcement Dimension	25
HG-340.1	Pitch of Staybolts Adjacent to Upper Corners of Fireboxes	29
HG-340.2	Acceptable Proportions for Ends of Through-stays	29
HG-340.3	Examples of Acceptable Corner Welds for Pressures Not Over 30 psi	29
HG-343	Details of Installation of Diagonal Stays	32
HG-345.1(a)	Sketch Showing Application of HG-345.1 to the Staying of Boilers	33
HG-345.1(b)	Sketch Showing Application of HG-345.1 to the Staying of Boilers	34
HG-345.2	Method of Determining Net Area of Irregular Segment of a Head	36
HG-350.1	Example of Tube Spacing With Pitch of Holes Equal in Every Row	36
HG-350.2	Example of Tube Spacing With Pitch of Holes Unequal in Every Second Row	36
HG-350.3	Example of Tube Spacing With Pitch of Holes Varying in Every Second and Third Row	37
HG-350.4	Example of Tube Spacing With Tube Holes on Diagonal Lines	37
HG-402	Official Symbol for Stamp to Denote The American Society of Mechanical Engineers' Standard	42
HG-530.1	Official Symbol for Stamp to Denote The American Society of Mechanical Engineers' Standard	51
HG-530.2	Form of Stamping on Completed Boilers or Their Nameplates for Steam and Water Boilers	52
HG-530.3	Form of Stamping on Completed Boilers or Their Nameplates for Boilers Suitable for Water Only	52

RS-002921
1/17/02
NUECES

HG-530.4	Form of Data Cast on Cast Iron Boiler Sections for Steam and Water Boilers	53
HG-530.5	Form of Data Cast on Cast Iron Boiler Sections for Boilers Suitable for Water Only	53
HG-530.6	Form of Stamping on Completed Cast Iron Boilers or Their Nameplates for Steam and Water Boilers	54
HG-530.7	Form of Stamping on Completed Cast Iron Boilers or Their Nameplates for Boilers Suitable for Water Only	54
HG-703.1(a)	Steam Boilers in Battery—Pumped Return—Acceptable Piping Installation	64
HG-703.1(b)	Steam Boilers in Battery—Gravity Return—Acceptable Piping Installation	65
HG-703.2	Hot Water Boilers in Battery—Acceptable Piping Installation	66
HG-725(a)	Spacing and Weld Details for Supporting Lugs in Pairs on Horizontal-Return Tubular Boiler	70
HG-725(b)	Welded Bracket Connection for Horizontal-Return Tubular Boiler	70

Tables

HG-321	Values of Spherical Radius Factor K_1	23
HG-340	Allowable Pitch of Stays, in.	30
HG-370	Minimum Thickness of Material for Threaded Connections to Boilers	38
HG-400.1	Minimum Pounds of Steam per Hour per Square Foot of Heating Surface	39
HG-709.1	Expansion Tank Capacities for Gravity Hot Water Systems	67
HG-709.2	Expansion Tank Capacities for Forced Hot Water Systems	67
HG-715	Size of Bottom Blowoff Piping, Valves, and Cocks	68

RS-002922
1/17/02
NUECES

ARTICLE 3
DESIGN

HG-300 DESIGN PRESSURE

(a) The design pressure is the pressure used in the formulas of this Article, in conjunction with the allowable stress values, design rules, and dimensions specified for determining the minimum required thicknesses for the parts of a boiler. The design pressure for a heating boiler shall be at least 30 psi.

(b) The term maximum allowable working pressure refers to gage pressure, or the pressure in excess of the atmospheric pressure in the boiler. The maximum allowable working pressure, as stamped on the boiler per HG-530, must be less than or equal to the design pressure for any of its parts.

(c) No boiler shall be operated at a pressure higher than the maximum allowable working pressure except when the safety valves or relief valves are discharging, at which time the maximum allowable working pressure shall not be exceeded by more than the amount specified in HG-400.1 and HG-400.2.

HG-300.1 Vacuum Boilers. Rules for factory sealed boilers to be operated only under vacuum conditions are given in Appendix 4.

HG-301 SHELLS UNDER INTERNAL PRESSURE

HG-301.1 General. The required thickness and the design pressure of cylindrical shells, pipe, and headers shall be determined in accordance with the following formulas:

$$t = \frac{PR}{SE - 0.6P}$$

$$P = \frac{SEt}{R + 0.6t}$$

where

P = design pressure, psi (but not less than 30 psi)
S = maximum allowable stress value from Tables HF-300.1 and HF-300.2, psi
t = required wall thickness, in.
R = inside radius of cylinder, in.
E = efficiency of longitudinal joint or of ligament between tube holes, whichever is the lesser. For welded joints, use the efficiency specified in HW-702. For seamless shells, use $E = 1$.

HG-301.2 Pipes Used as Tubes. Pipes used as tubes shall be designed in accordance with HG-315.

HG-305 FORMED HEADS, PRESSURE ON CONCAVE SIDE

HG-305.1 General. The required thickness at the thinnest point after forming[1] of ellipsoidal, torispherical, and hemispherical heads under pressure on the concave side (plus heads) shall be computed by the appropriate formulas in this paragraph.

(a) Notation. The symbols used in this paragraph are defined as follows:

t = required wall thickness after forming, in.
P = design pressure, psi (but not less than 30 psi)
D = inside diameter of the head skirt; or inside length of the major axis of an ellipsoidal head; or inside diameter of a cone head at the point under consideration, measured perpendicular to the longitudinal axis, in.
S = maximum allowable stress value as given in Tables HF-300.1 and HF-300.2, psi

[1] In order to insure that a finished head is not less than the minimum thickness required, it is customary to use a thicker plate to take care of possible thinning during the process of forming. The neck of an opening in a head with an integrally flanged opening will thin out due to the fluing operation. This is permissible provided the neck thickness is not less than the minimum thickness specified in HG-301 or the thickness required for a cylindrical shell having a diameter equal to the maximum diameter of the opening. (See HG-323.)

RS-002923
1/17/02
NUECES

L = inside spherical or crown radius, in.

E = lowest efficiency of any joint in the head. For welded joints, use the efficiency specified in HW-702. For seamless heads, use $E = 1$, except for hemispherical heads furnished without a skirt, in which case use the efficiency of the head-to-shell joint.

HG-305.2 Ellipsoidal Heads. The required thickness and the design pressure of a dished head of semiellipsoidal form, in which half the minor axis (inside depth of the head minus the skirt) equals one-fourth of the inside diameter of the head skirt, shall be calculated by the following formulas:

$$t = \frac{PD}{2SE - 0.2P}$$

or

$$P = \frac{2SEt}{D + 0.2t}$$

HG-305.3 Torispherical Heads. The required thickness and the design pressure of a torispherical head shall be calculated by the following formulas (see HG-305.6):

$$t = \frac{0.885PL}{SE - 0.1P}$$

or

$$P = \frac{SEt}{0.885L + 0.1t}$$

HG-305.4 Hemispherical Heads. The required thickness and the design pressure of a hemispherical head in which P does not exceed $0.665SE$ shall be calculated by the following formulas:

$$t = \frac{PL}{2SE - 0.2P}$$

or

$$P = \frac{2SEt}{L + 0.2t}$$

HG-305.5 Formed Heads With Stays. A formed head of a lesser thickness than that required by the rules of this paragraph may be used provided it is stayed as a flat surface according to the rules of HG-340 for stayed flat plates, no allowance being made in such staying for the holding power due to the curvature of the head unless all the following conditions are met:

(a) the head is at least two-thirds as thick as required by the rules of this paragraph for an unstayed head;

(b) the head is at least $\frac{7}{8}$ in. thick;

(c) the stays are through-stays attached to the head by outside and inside nuts;

(d) the design pressure on the head is taken as that calculated for an unstayed formed head plus the pressure calculated for the stays by the formula for stayed surfaces in HG-340 using a value of $C = 1.63$.

HG-305.6 Inside Crown Radius of Unstayed Heads. The inside crown radius to which an unstayed formed head is dished shall be not greater than the outside diameter of the skirt of the head. The inside knuckle radius of a torispherical head shall be not less than 6% of the outside diameter of the skirt of the head but in no case less than three times the head thickness.

HG-305.7 Heads Built Up of Several Shapes. A head for a cylindrical shell may be built up of several head shapes, the thicknesses of which satisfy the requirements of the appropriate formulas above, provided that adjoining shapes are so formed that they have a common tangent transverse to the joint.

HG-305.8 Length of Skirts. The required length of skirt on heads concave and convex to pressure shall comply with HW-715.

HG-305.9 Permissible Diameter of Flat Spots on Formed Heads. If a torispherical, ellipsoidal, or hemispherical head is formed with a flattened spot or surface, the diameter of the flat spot shall not exceed that permitted for flat heads as given by the formula in HG-307, using $C = 0.20$.

HG-306 FORMED HEADS, PRESSURE ON CONVEX SIDE

HG-306.1 Unstayed dished heads with the pressure on the convex side shall have a design pressure equal to 60% of that for heads of the same dimensions having the pressure on the concave side (see HG-503).

RS-002924
1/17/02
NUECES

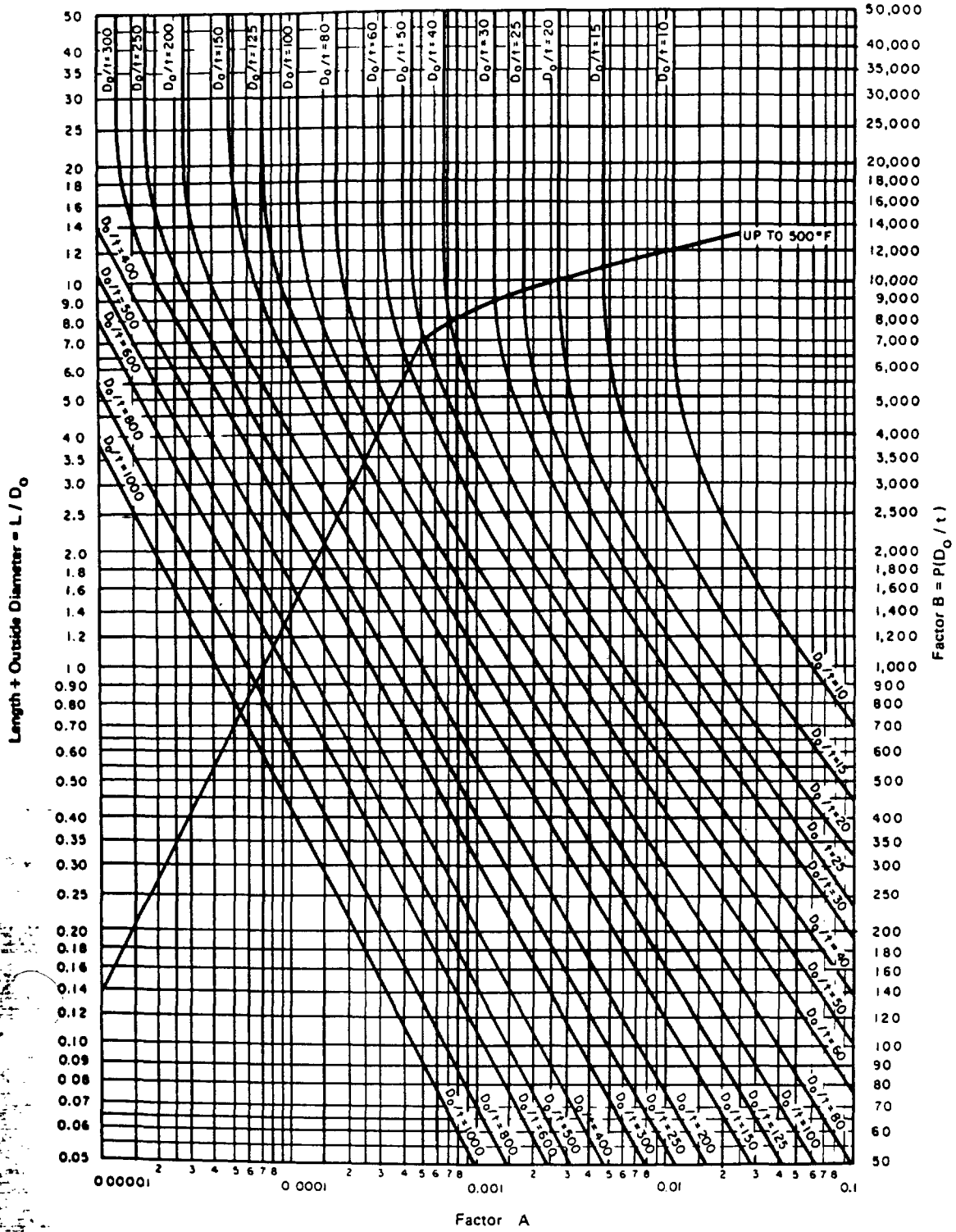

FIG. HG-312.1 CHART FOR DETERMINING WALL THICKNESS OF HORIZONTAL CYLINDRICAL FURNACES WHEN CONSTRUCTED OF CARBON STEEL
Specified Yield Strength 24,000 psi to, But Not Including 30,000 psi

RS-002928
1/17/02
NUECES

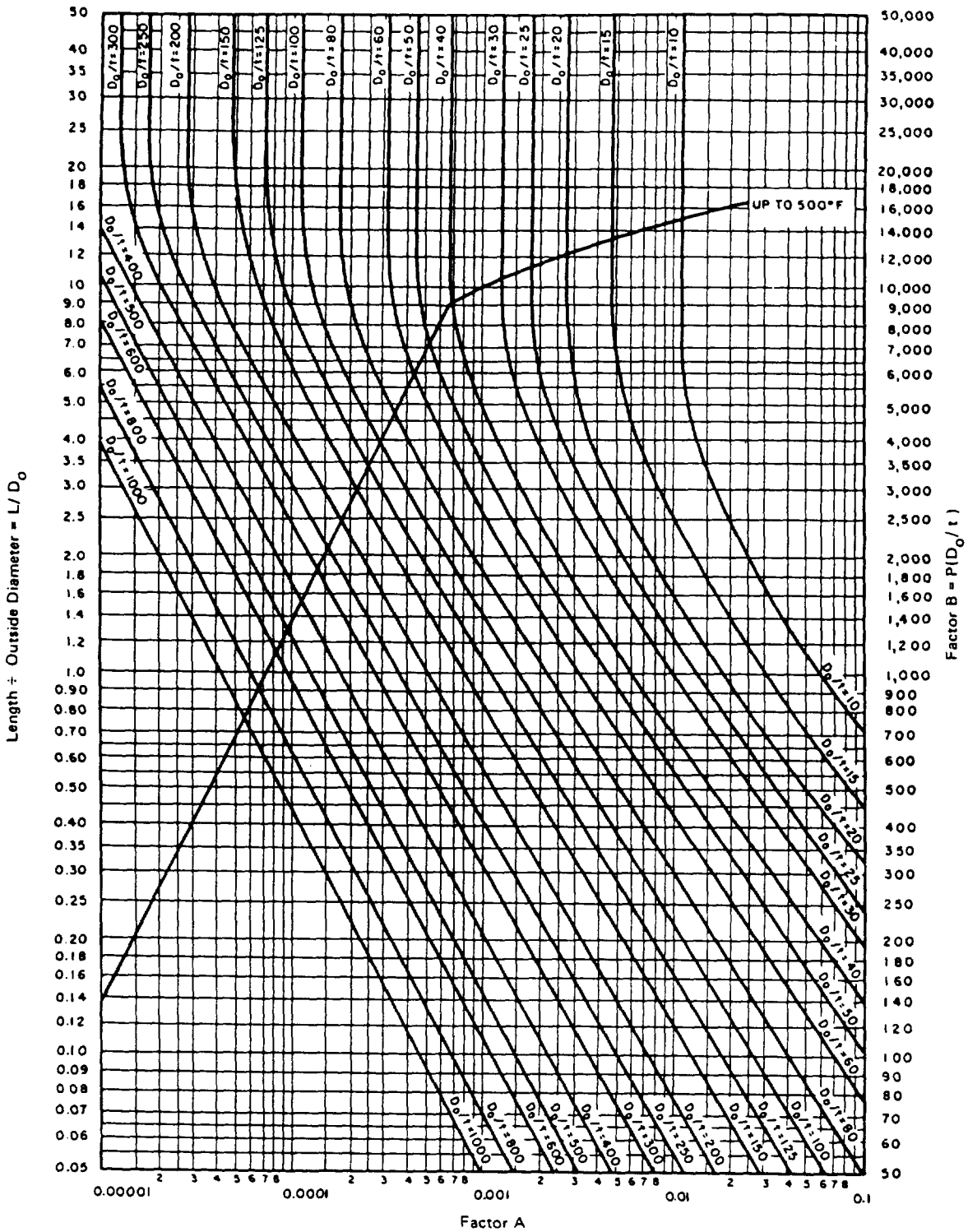

FIG. HG-312.2 CHART FOR DETERMINING WALL THICKNESS OF HORIZONTAL CYLINDRICAL FURNACES WHEN CONSTRUCTED OF CARBON STEEL
Specified Yield Strength 30,000 psi to 38,000 psi

RS-002926
1/17/02
NUECES

HG-320.2 Size of Openings. While openings in cylindrical and spherical shells are not limited as to size provided they are adequately reinforced, the rules given herein for reinforcement are intended to apply to openings not exceeding the following dimensions:

(a) for boilers 60 in. in diameter and less: one-half the boiler diameter but not over 20 in.;

(b) for boilers over 60 in. in diameter: one-third the boiler diameter, but not over 40 in.;

(c) larger openings should be given special attention and may be provided with reinforcement in any suitable manner that complies with the intent of the Code rules. It is recommended that the reinforcement provided be distributed close to the opening. (A provision of about two-thirds of the required reinforcement within a distance of one-fourth of the nozzle diameter on each side of the finished opening is suggested.) Special consideration should be given to the fabrication details used and the inspection employed on critical openings; reinforcement often may be advantageously obtained by use of a thicker shell plate for a boiler course or inserted locally around the openings; welds may be ground to concave contour and the inside corners of the opening rounded to a generous radius to reduce stress concentrations. Appropriate proof testing may be advisable in extreme cases of large openings approaching full boiler diameter, openings of unusual shape, etc.

HG-320.3 Strength and Design of Finished Openings

(a) All references to dimensions in this and succeeding paragraphs apply to the finished construction after adjustment has been made for any material added as corrosion or other allowance. For design purposes, no metal added as corrosion or other allowance may be considered as reinforcement. Reinforcement shall be provided to satisfy the requirements of HG-321 for all openings except as otherwise provided in (b), (c), and (d) below.

(b) Openings in a definite pattern, such as tube holes, may be designed in accordance with the rules for ligaments in HG-350 provided the diameter of the largest hole in the group does not exceed that permitted by the chart in Fig. HG-320.

The symbols given in Fig. HG-320 are defined as follows:

P = design pressure, psi
d = maximum allowable diameter of opening, in.
D = outer diameter of the shell, in.
t = nominal thickness of the shell, in.
S = maximum allowable stress value, psi, taken from Table HF-300
$K = PD/2St$

(c) No calculations need be made to determine the availability of reinforcement for single openings in boilers not subject to rapid fluctuations in pressure or temperature and in which the outside diameter of the opening does not exceed one-fourth of the inside diameter of the boiler, provided the hole cut in the wall of the shell or head does not exceed the following sizes:

(1) 2 in. pipe size for welded connections in boiler walls over $\frac{3}{8}$ in. thick and for all threaded, studded, or expanded connections;

(2) 3 in. pipe size for welded connections in boiler walls $\frac{3}{8}$ in. thick and under.

(d) No calculations need be made to demonstrate compliance with HG-321 for single openings not covered in HG-320.3(c) when the diameter of the opening in the shell or header does not exceed that permitted in Fig. HG-320.

HG-321 REINFORCEMENT REQUIRED FOR OPENINGS IN SHELLS AND FORMED HEADS

HG-321.1 General. The rules in this subparagraph apply to all openings other than openings in a definite pattern covered by HG-320.3(b), openings covered by HG-320.3(c) and HG-320.3(d), flanged-in openings in formed heads covered by HG-323, and openings in flat heads covered by HG-325.

(a) Reinforcement shall be provided in such amount and distribution that the requirements for area of reinforcement are satisfied for all planes through the center of the opening and normal to the boiler surface. For a circular opening in a cylindrical shell, the plane containing the axis of the shell is the plane of greatest loading due to pressure.

HG-321.2 Design for Internal Pressure. The total cross-sectional area of reinforcement A required in any given plane for a boiler under internal pressure shall be not less than

$$A = dt_rF$$

where

d = the diameter in the given plane of the finished opening, in.
F = a correction factor which compensates for the variation in pressure stresses on different planes with respect to the axis of a vessel. A value of 1.00 shall be used for all configurations except

RS-002927
1/17/02
NUECES

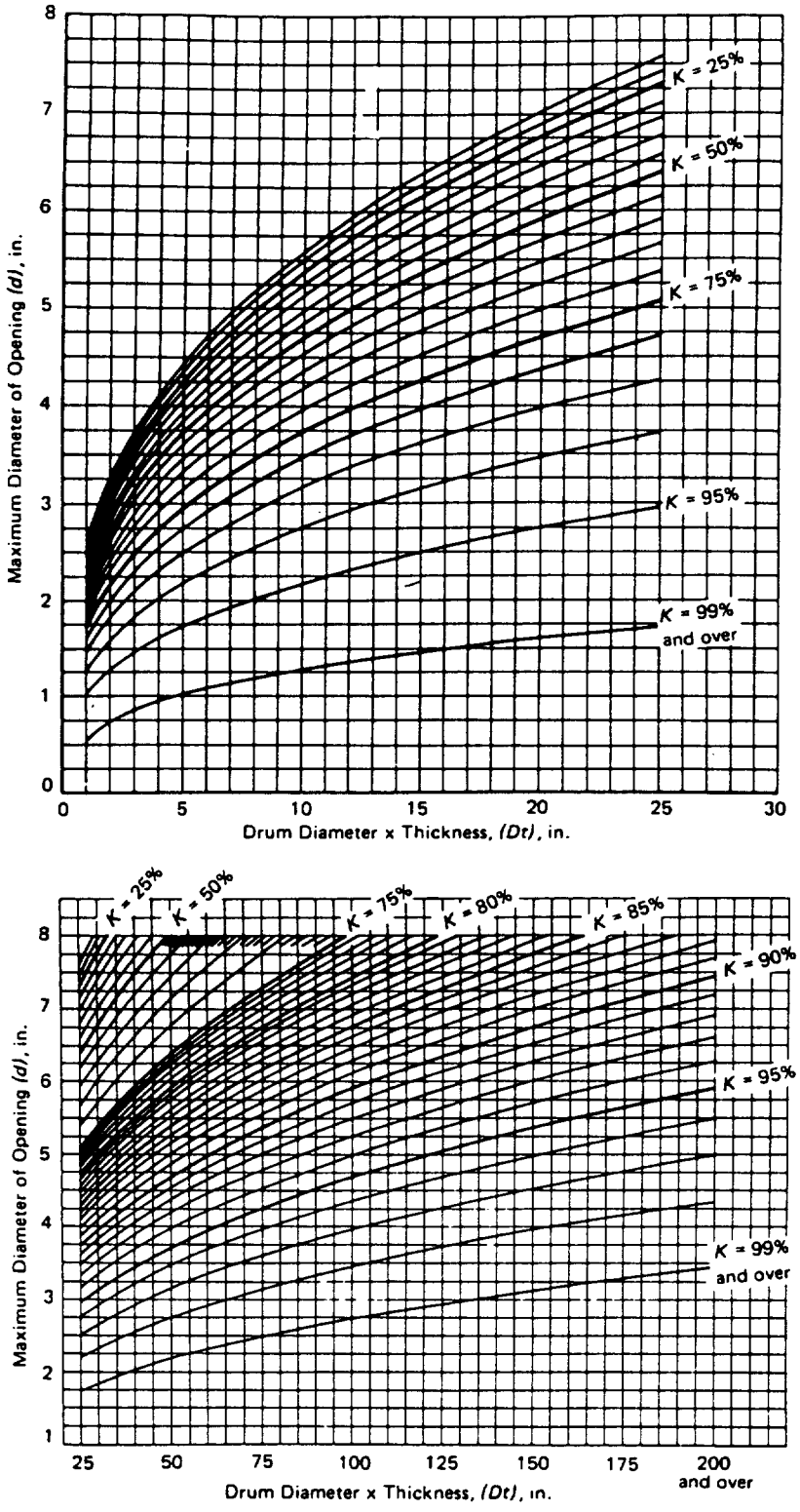

FIG. HG-320 CHART SHOWING LIMITS OF SIZES OF OPENINGS WITH INHERENT COMPENSATION IN CYLINDRICAL SHELLS
Maximum Permissible Diameter of Opening Is 8 in.

RS-002928
1/17/02
NUECES

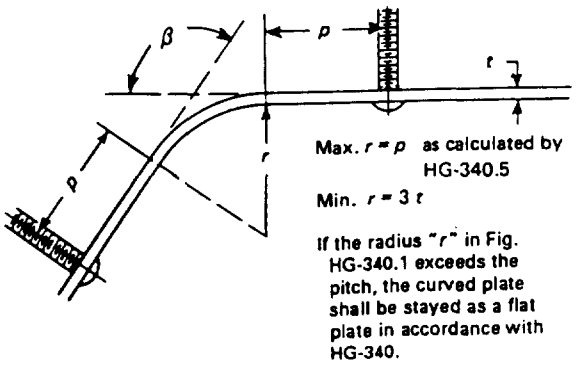

FIG. HG-340.1 PITCH OF STAYBOLTS ADJACENT TO UPPER CORNERS OF FIREBOXES

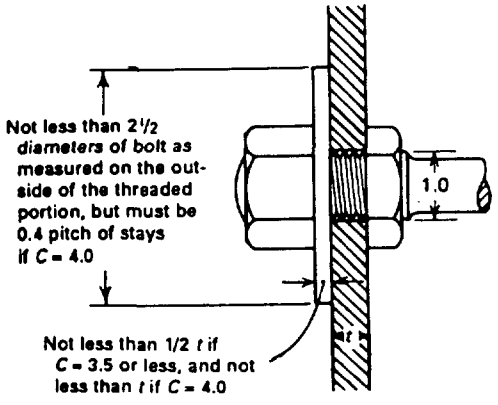

FIG. HG-340.2 ACCEPTABLE PROPORTIONS FOR ENDS OF THROUGH-STAYS

shown in Fig. HG-340.3 shall have a row of stays not more than one pitch from the weld.

(b) In the construction of heating boilers to be designed for water pressures above 30 psi, corner joints shall comply with the requirements of HW-701.3.

(c) When the edge of a flat stayed plate is flanged, the distance from the center of the outermost stays to the inside of the supporting flange shall not be greater than the pitch of the stays plus the inside radius of the flange.

HG-340.6 Allowable Pitch of Stays. The allowable pitch, in inches, for stays as given in Table HG-340 may be used in place of the pitch calculated under HG-340.1 when the allowable stress of the steel is 11,000 psi or greater.

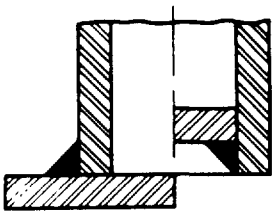

FIG. HG-340.3 EXAMPLES OF ACCEPTABLE CORNER WELDS FOR PRESSURES NOT OVER 30 psi

HG-341 STAYBOLTS

HG-341.1 Threaded Staybolts. The ends of staybolts extending through the plate shall extend beyond the plate not less than two threads when installed, after which they shall be riveted over or upset by an equivalent process without excessive scoring of the plate, or they may be fitted with threaded nuts through which the staybolt shall extend. The outside ends of solid staybolts 8 in. or less in length, if of uniform diameter throughout their length, shall be drilled with telltale holes at least $^3/_{16}$ in. in diameter to a depth extending at least $^1/_2$ in. beyond the inside of the plate. If such staybolts are reduced in section below their diameter at the root of the thread, the telltale holes shall extend at least $^1/_2$ in. beyond the point where the reduction in section commences. Hollow staybolts may be used in place of solid staybolts with drilled ends. Solid staybolts over 8 in. long need not be drilled. Staybolts used in waterlegs of watertube boilers shall be hollow or drilled at both ends, in accordance with the requirements above stated, irrespective of their length. All threaded staybolts not normal to the stayed surface shall have not less than three engaging threads of which at least one shall be a full thread; but if the thickness of the material in the boiler is not sufficient to give one full engaging thread, the plates shall be sufficiently reinforced on the inside by a steel plate welded thereto. Telltale holes are not required in staybolts attached by welding.

HG-341.2 Staybolts Upset for Threading. The ends of steel stays upset for threading shall be fully annealed after upsetting.

HG-341.3 Staybolts Fitted With Nuts. The ends of staybolts fitted with nuts shall not be exposed to direct radiant heat from fire.

HG-341.4 Welded-In Staybolts. Requirements for welded-in staybolts are given in HW-710.

RS-002929
1/17/02
NUECES

TABLE HG-340
ALLOWABLE PITCH OF STAYS, in.[1]
(Limited by HG-340.3)

Design Pressure, psi	Plate Thickness, in.															
	1/4	9/32	5/16	11/32	3/8	13/32	7/16	15/32	1/2	17/32	9/16	19/32	5/8	21/32	11/16	3/4
30	7 7/8	8 13/16	9 13/16	10 13/16	11 13/16	12 3/4	13 3/4	15	16	17	18	19	20	21	22	24
40	6 13/16	7 5/8	8 1/2	9 3/8	10 3/16	1 11/16	11 15/16	13	13 7/8	14 3/4	15 11/16	16 7/16	17 5/16	18 3/16	19 1/16	20 13/16
50	6 1/16	6 7/8	7 5/8	8 3/8	9 1/8	9 7/8	10 5/8	11 5/8	12 3/8	13 3/16	13 15/16	14 3/4	15 1/2	16 1/4	17 1/16	18 5/8
60	5 5/16	6 1/4	6 15/16	7 5/8	8 5/16	9	9 3/4	10 5/8	11 5/16	11 15/16	12 3/4	13 7/16	14 1/8	14 7/8	15 5/16	17
70	5 1/8	5 13/16	6 7/16	7 1/16	7 11/16	8 3/8	9	9 13/16	10 1/2	11 1/8	11 13/16	12 7/16	13 1/8	13 3/4	14 3/8	15 11/16
75	4 15/16	5 9/16	6 1/4	6 13/16	7 7/16	8 1/16	8 11/16	9 1/2	10 1/8	10 3/4	11 3/8	12	12 5/8	13 5/16	13 15/16	15 3/16
80	4 13/16	5 3/8	6	6 5/8	7 3/16	7 13/16	8 7/16	9 3/16	9 13/16	10 7/16	11	11 5/8	12 1/4	12 7/8	13 1/2	14 11/16
90	4 9/16	5 1/8	5 11/16	6 1/4	6 13/16	7 3/8	7 15/16	8 11/16	9 1/4	9 13/16	10 3/8	11	11 9/16	12 1/8	12 11/16	13 7/8
100	4 5/16	4 13/16	5 3/8	5 15/16	6 7/16	7	7 1/2	8 3/16	8 3/4	9 5/16	9 7/8	10 3/8	10 15/16	11 1/2	12 1/16	13 1/8
110	. . .	4 5/8	5 1/8	5 5/8	6 1/8	6 11/16	7 3/16	7 13/16	8 3/8	8 7/8	9 3/8	9 15/16	10 7/16	11	11 1/2	12 9/16
120	. . .	4 7/16	4 7/8	5 3/8	5 7/8	6 3/8	6 7/8	7 1/2	8	8 1/2	9	9 1/2	10	10 1/2	11	12
125	. . .	4 5/16	4 13/16	5 5/16	5 3/4	6 1/4	6 3/4	7 3/8	7 13/16	8 5/16	8 7/8	9 5/16	9 13/16	10 5/16	10 3/4	11 3/4
130	. . .	. . .	. . .	5 3/16	5 5/8	6 1/8	6 5/8	7 3/16	7 11/16	8 3/16	8 5/8	9 1/8	9 5/8	10 1/8	10 7/16	11 1/2
140	. . .	. . .	. . .	5	5 7/16	5 7/8	6 3/8	6 13/16	7 3/8	7 7/8	8 5/16	8 13/16	9 1/4	9 3/4	10 3/16	11 1/8
150	. . .	. . .	. . .	4 13/16	5 1/4	5 11/16	6 1/8	6 11/16	7 1/8	7 5/8	8 1/16	8 1/2	8 15/16	9 3/8	9 13/16	10 3/4
160	. . .	. . .	. . .	4 11/16	5 1/8	5 1/2	5 15/16	6 1/2	6 15/16	7 3/8	7 13/16	8 1/4	8 11/16	9 1/16	9 1/2	10 7/16

NOTE:
(1) The pitches in Table HG-340 are calculated from the formula $p = \sqrt{t^2 \times SC/P}$. In calculating these pitches, $C = 2.7$ for plate thicknesses not over 7/16 in. and $C = 2.8$ for plate thicknesses exceeding 7/16 in.; $S = 11{,}000$ psi.

RS-002830
1/17/02
NUECES

For 45 deg. seat,

$$W = (51.45\ \pi DLP \times 0.707K)\ 0.90$$

For flat seat,

$$W = (51.45\ \pi DLPK)\ 0.90$$

For nozzle,

$$W = (51.45\ APK)\ 0.90$$

where

W = weight of steam/hr, lb
D = seat diameter, in.
L = lift, in.
P = absolute pressure, psi (accumulated)
K_D = coefficient of discharge for a single test
K = average coefficient of discharge
A = nozzle-throat area, sq in.

NOTE: The maximum and minimum coefficient determined by the tests of a valve design shall not vary more than ±5% from the average. If one or more tests are outside the acceptable limits, one valve of the Manufacturer's choice shall be replaced with another valve of the same size and pressure setting or by a modification of the original valve. Following this test a new average coefficient shall be calculated, excluding the replaced valve test. If one or more tests are now outside the acceptable limits, as determined by the new average coefficient, a valve of the Manufacturer's choice must be replaced by two valves of the same size and pressure as the rejected valve. A new average coefficient, including the replacement valves, shall be calculated. If any valve, excluding the two replaced valves, now falls outside the acceptable limits, the tests shall be considered unsatisfactory.

(b) Slope Method. If a Manufacturer wishes to apply the Code Symbol to a design of pressure relief valves, four valves of each combination of pipe and orifice size shall be tested. These four valves shall be set at pressures that cover the approximate range of pressures for which the valve will be used, or that cover the range available at the certified test facility that shall conduct the tests. The capacities shall be based on these four tests as follows.

(1) The slope (dW/dP) of the actual measured relieving capacity versus the flow pressure for each test point shall be calculated and averaged:

Slope = dW/dP = measured capacity/absolute flow pressure (psia)

All values derived from the testing must fall within plus or minus 5% of the average value:

Minimum slope = average slope × 0.95

Maximum slope = average slope × 1.05

If the slope values derived from the test do not fall between the minimum and maximum slope values, the authorized observer shall require that additional valves be tested at the rate of two for each value beyond the maximum and minimum values with a limit of four additional valves.

(2) The relieving capacity to be stamped on the valve shall not exceed 90% of the average slope times the absolute flow pressure:

$$W \leq \text{average slope } [(\text{stamped set pressure} \times 1.10) + 14.7]\ 0.90$$

(c) Three-Valve Method. If a Manufacturer wishes to apply the Code Symbol to steam safety valves or safety relief valves of one or more sizes of a design set at one pressure, he shall submit three valves of each size of each design set at one pressure for testing and the stamped capacity of each size shall not exceed 90% of the average capacity of the three valves tested.

NOTE: The discharge capacity as determined by the test of each valve tested shall not vary by more than ±5% of the average capacity of the three valves tested. If one of the three valve tests falls outside of the limits, it may be replaced by two valves and a new average calculated based on all four valves, excluding the replaced valve.

HG-402.4 Pressures at Which Capacity Tests Shall Be Conducted. Safety valves for steam boilers shall be tested for capacity at 5 psi over the set pressure for which the valve is set to operate. Capacity certification tests of safety relief valves for hot water heating and hot water supply boilers shall be conducted at 110% of the pressure for which the valve is set to operate.

HG-402.5 Opening Tests of Pressure–Temperature Relief Valves. For the purpose of determining the set (opening) pressure, the test medium shall be room temperature water. The actual set pressure is defined as the pressure at the valve inlet when the flow rate through the valve is 40 cc/min. Capacity tests shall be conducted with steam (see HG-402.7) at a pressure 10% above the actual water set pressure. For production capacity check tests, the rated capacity shall be based on the actual water set pressure.

HG-402.6 Capacity Tests of Pressure–Temperature Relief Valves. For the purpose of determining the capacity of pressure–temperature relief valves, dummy elements of the same size and shape as the regularly applied thermal element shall be substituted and the

RS-002931
1/17/02
NUECES

relieving capacity shall be based on the pressure element only. Valves selected to meet the requirements of production testing, HG-401.3, shall have their temperature elements deactivated by the Manufacturer prior to or at the time of capacity testing.

HG-402.7 Fluid Medium for Capacity Tests. The tests shall be made with dry saturated steam. For test purposes the limits of 98% minimum quality and 20°F maximum superheat shall apply. Correction from within these limits may be made to the dry saturated condition. The relieving capacity shall be measured by condensing the steam or with a calibrated steam flowmeter.

(a) To determine the discharge capacity of safety relief valves in terms of Btu, the relieving capacity in pounds for steam per hour W is multiplied by 1000.

HG-402.8 Where and by Whom Capacity Tests Shall Be Conducted

(a) Tests shall be conducted at a place where the testing facilities, methods, procedures, and person supervising the tests (Authorized Observer) meet the applicable requirements of ASME/ANSI PTC 25.3. The tests shall be made under the supervision of and certified by an Authorized Observer. The testing facilities, methods, procedures, and qualifications of the Authorized Observer shall be subject to the acceptance of ASME on recommendation of an ASME Designee. Acceptance of the testing facility is subject to review within each 5 year period.

(b) Capacity test data reports for each valve model, type, and size, signed by the Manufacturer and the Authorized Observer witnessing the tests, shall be submitted to the ASME Designee for review and acceptance.[2]

NOTE: When changes are made in the design, capacity certification tests shall be repeated.

HG-402.9 Test Record Data Sheet. A data sheet for each valve shall be filled out and signed by the authorized observer witnessing the test. Such data sheet will be the manufacturer's authority to build and stamp valves of corresponding design and construction. When changes are made in the design of a safety or safety relief valve in such a manner as to affect the flow path, lift, or performance characteristics of the valve, new tests in accordance with this Section shall be performed.

NOTE: See HG-512 for safety and safety relief valve accumulation test requirements. See HG-701 for safety and safety relief valve installation requirements.

HG-403 HEATING SURFACE

The heating surface shall be computed as follows.

(a) Heating surface, as part of a circulating system in contact on one side with water or wet steam being heated and on the other side with gas or refractory being cooled, shall be measured on the side receiving heat.

(b) Boiler heating surface and other equivalent surface outside the furnace shall be measured circumferentially plus any extended surface.

(c) Waterwall heating surface and other equivalent surface within the furnace shall be measured as the projected tube area (diameter × length) plus any extended surface on the furnace side. In computing the heating surface for this purpose, only the tubes, fireboxes, shells, tubesheets, and the projected area of headers need be considered, except that for vertical firetube steam boilers, only that portion of the tube surface up to the middle of the gage glass is to be computed.

HG-405 THERMAL ELEMENTS FOR PRESSURE–TEMPERATURE RELIEF VALVES

The thermal elements for pressure–temperature relief valves shall be so designed and constructed that they will not fail in any manner which could obstruct flow passages or reduce capacities of the valves when the elements are subjected to steam temperatures.

NOTE: Since the temperature elements are designed for temperatures up to only 250°F, they will fail when subjected to steam pressures with corresponding saturation temperatures in excess of 250°F.

[2] Valve capacities are published in "Pressure Relief Device Certifications." This publication may be obtained from The National Board of Boiler and Pressure Vessel Inspectors, 1055 Crupper Avenue, Columbus, Ohio, 43229.

RS-002932
1/17/02
NUECES

devices or any movement of the fixed base points or of the pressure part as a whole.

(c) Two curves of displacement against test pressure shall be plotted for each reference point as the test progresses, one showing the displacement under pressure, and one showing the permanent displacement when the pressure is removed. The application of pressure shall be stopped when it is evident that the curve through the points representing displacement under pressure has deviated from a straight line.

(d) The pressure coincident with the proportional limit of the material shall be determined by noting the pressure at which the curve representing displacement under pressure deviates from a straight line. The pressure at the proportional limit may be checked from the curve of permanent displacement by locating the point where the permanent displacement begins to increase regularly with further increases in pressure. Permanent deformation at the beginning of the curve that results from the equalization of stresses and irregularities in the material may be disregarded.

The design pressure P, psi, at test temperature for parts tested under this paragraph shall be computed by one of the following formulas.

(1) If the average yield strength is determined by HG-501.6,

$$P = 0.5H\frac{Y_s}{Y_a}$$

(2) In order to eliminate the necessity of cutting tensile specimens and determining the actual yield strength of the material under test, one of the following formulas may be used to determine the design pressure:

(a) for carbon steel, meeting an acceptable Code specification, with a specified minimum tensile strength of not over 70,000 psi,

$$P = 0.5H\left(\frac{S}{S + 5000}\right) \quad (2a)$$

(b) for any acceptable material listed in Section IV,

$$P = 0.4H \quad (2b)$$

where

H = hydrostatic test pressure coincident with the proportional limit of the weakest element of the component part tested, psi

Y_s = specified minimum yield strength, psi

Y_a = actual average yield strength from test specimens, psi

S = specified minimum tensile strength, psi

(e) When Formula (2a) or (2b) is used, the material in the pressure part shall have had no appreciable cold working or other treatment that would tend to raise the yield strength above the normal.

HG-502.3 Bursting Tests

(a) This procedure may be used for pressure parts under internal pressure when constructed of any material permitted to be used under the rules of Section IV. The design pressure of any component part proof tested by this method shall be established by a hydrostatic test to failure by rupture of a full-size sample of such pressure part. As an alternative, the hydrostatic test may be stopped when the test pressure reaches a value that will, by the formula in (b) below, justify the design pressure.

(b) The design pressure P, psi, for parts tested under this paragraph shall be computed by the following formula:

$$P = \frac{B}{5} \times \frac{S}{S_a \text{ or } S_m}$$

where

B = bursting test pressure, psi

S = specified minimum tensile strength, psi

S_a = average actual tensile strength of test specimens, psi

S_m = maximum tensile strength of range of specification, psi

HG-502.4 Brittle Coating Test Procedure

(a) Subject to the limitations of HG-501.1(a), this procedure may be used only for boiler and boiler parts under internal pressure, constructed of materials having a definitely determinable yield point. The component parts that require proof testing shall be coated with a lime wash or other brittle coating in accordance with HG-501.5. Pressure shall be applied in accordance with HG-501.4. The parts being proof tested shall be examined between pressure increments for signs of yielding as evidenced by flaking of the brittle coating, or by the appearance of strain lines. The application of pressure shall be stopped at the first sign of yielding, or if desired, at some lower pressure.

(b) The design pressure P, psi, for parts tested under this paragraph shall be computed by one of the following formulas:

(1) if the average yield strength is determined in accordance with HG-501.6,

RS-002933
1/17/02
NUECES

$$P = 0.5H\frac{Y_s}{Y_a}$$

(2) to eliminate the necessity of cutting tensile specimens and determining the actual yield strength of the material under test, one of the following formulas may be used to determine the design pressure:

(a) for carbon steel meeting an acceptable Code specification, with a specified minimum tensile strength of not over 70,000 psi,

$$P = 0.5H\left(\frac{S}{S + 5000}\right) \quad (2a)$$

(b) for any acceptable material listed in Section IV,

$$P = 0.4H \quad (2b)$$

where

H = hydrostatic test pressure at which the test was stopped, psi

Y_s = specified minimum yield strength, psi

Y_a = actual average yield strength from test specimens, psi

S = specified minimum tensile strength, psi

(c) When Formula (2a) or (2b) is used, the material in the pressure part shall have had no appreciable cold working or other treatment that would tend to raise the yield strength above the normal.

HG-503 TESTS OF PARTS SUBJECT TO COLLAPSE

Parts of the boiler normally subject to collapse for which specified rules are not provided in this Section shall withstand without excessive deformation a hydrostatic test of not less than three times the desired design pressure.

HG-504 TESTS OF DUPLICATE PARTS

When the design pressure of a pressure part has been established by a proof test, duplicate parts of the same materials, design, and construction need not be proof tested but shall be given the standard hydrostatic test at 1½ times the maximum allowable working pressure. The dimensions and minimum thickness of the structure to be tested should not vary materially from those actually used. A geometrically similar part may be qualified by a series of tests covering the complete size range of the pressure part.

HG-505 TEST GAGES

(a) An indicating gage shall be connected directly to the pressure part. If the indicating gage is not readily visible to the operator controlling the pressure applied, an additional indicating gage shall be provided where it will be visible to the operator throughout the duration of the test. For large pressure parts, it is recommended that a recording gage be used in addition to indicating gages.

(b) Dial indicating pressure gages used in testing shall be graduated over a range of about double the intended maximum test pressure, but in no case shall the range be less than 1½ nor more than 4 times that pressure. Digital reading pressure gages having a wider range of pressure may be used provided the readings give the same or greater degree of accuracy as obtained with dial pressure gages.

(c) All gages used in proof testing shall be calibrated against a standard deadweight tester or a calibrated master gage before the proof test is begun. Gages shall be recalibrated at any time that there is reason to believe they are in error.

HG-506 INSPECTION OF PROOF TESTS

Tests to establish the design pressure of pressure parts shall be witnessed and accepted by an Authorized Inspector.

HG-510 HYDROSTATIC TESTS

Cast iron boilers shall be tested in accordance with HC-410. All other boilers shall be subjected to a hydrostatic test pressure which falls between the following limits.

(a) The lower limit shall be the greater of 60 psi or 1½ times the maximum allowable working pressure to be stamped on the boiler.

(b) The upper limit shall be the greater of 60 psi or 1½ times the design pressure.

An inspection for leakage shall be made of all joints and connections at the lower limit. In making hydrostatic pressure tests, the pressure shall be under such control that the test pressure established shall not be exceeded by more than 10 psi.

RS-002934
1/17/02
NUECES

Data Report may be used to include the serial numbers in uninterrupted sequence of identical boilers completed, inspected, and stamped in a continuous 8 hr period. Form H-2 or H-3 shall be used.

(a) The boiler Manufacturer shall have the responsibility of furnishing a copy of the completed Manufacturer's Data Report at the place of installation to the inspection agency, the purchaser, and the state, municipal, or provincial authority.

(b) The Manufacturer shall either keep a copy of the Manufacturer's Data Report on file for at least 5 years, or the boiler may be registered and the original Data Report filed with the National Board of Boiler and Pressure Vessel Inspectors, 1055 Crupper Avenue, Columbus, Ohio 43229.

HG-520.2 Partial Data Reports

(a) Manufacturer's Partial Data Reports for those parts of a boiler requiring inspection under this Code, which are furnished by other than the shop of the manufacturer responsible for the completed boiler, shall be executed by the parts manufacturer and shall be forwarded in duplicate to the manufacturer of the finished boiler.

(b) Partial Data Reports (Form H-4) shall be completed for all parts that require inspection under this Code which are fabricated by a manufacturer other than the manufacturer of the completed boiler. These Partial Data Reports, together with his own inspection, shall be the final Authorized Inspector's authority to witness the application of the Code Symbol to the completed boiler.

HG-530 STAMPING OF BOILERS

HG-530.1 Stamping Requirements for Boilers Other Than Those Constructed Primarily of Cast Iron (See HG-530.2)

(a) All boilers to which the Code Symbol is to be applied shall be built according to the rules of this Section by a manufacturer who is in possession of a Code Symbol Stamp and a valid Certificate of Authorization. Each boiler shall be stamped with the Code Symbol shown in Fig. HG-530.1 and with the following data:

(1) the boiler manufacturer's name, preceded by the words "Certified by;"

(2) maximum allowable working pressure;

(3) safety or safety relief valve capacity (minimum), lb/hr or MBH, as determined according to HG-400.1(d) and HG-400.2(d);

(4) heating surface, sq ft, as determined according to HG-403 (or kilowatt power input for electric boilers);



FIG. HG-530.1 OFFICIAL SYMBOL FOR STAMP TO DENOTE THE AMERICAN SOCIETY OF MECHANICAL ENGINEERS' STANDARD

(5) manufacturer's serial number;

(6) year built.

NOTE: The year built may be incorporated into the serial number as a prefix consisting of the last two digits of the year.

(b) Items (1) through (6) listed in (a) above, with the markings arranged substantially as shown in Fig. HG-530.2 or Fig. HG-530.3, shall be stamped with letters at least $^{5}/_{16}$ in. high and in some conspicuous place on the boiler proper or on a nameplate at least $^{3}/_{64}$ in. thick permanently fastened to the boiler proper. The location of the stamping shall be as follows:

(1) Horizontal Tubular Flue Type Boilers: on the front head above the central rows of tubes or flues.

(2) Locomotive Firebox, Compact, or Vertical Firetube Type Boilers: over or near the fire door or handhole or washout plug opening on the front end or side.

(3) Watertube Type Boilers: on a head of the top outlet drum. Waterwalls and headers shall carry identifying markings.

(4) Split-Section and Section Firebox Type Wrought Boilers: over or near the fire door or handhole or washout plug opening on the front end or side. Each section shall carry identifying markings.

(5) Scotch Type Boilers: on either side of the shell near the normal water level line adjacent to the front tubesheet.

(c) On any of the above type boilers where there is not sufficient space in the places designated and on other types and new designs of boilers, the nameplate shall be located in a conspicuous place.

(d) The stamping or nameplate on the boiler proper shall not be covered with insulating or other material unless:

(1) the required markings are duplicated and stamped directly on the boiler casing in some conspicuous place using letters and numerals at least $^{5}/_{16}$ in. high;

(2) an opening with a removable cover is provided in the jacket or other form of casing so that, when

RS-002935
1/17/02
NUECES

FORM OF STAMPING ON COMPLETED BOILERS OR THEIR NAMEPLATES
(Not Applicable for Boilers Constructed Primarily of Cast Iron)

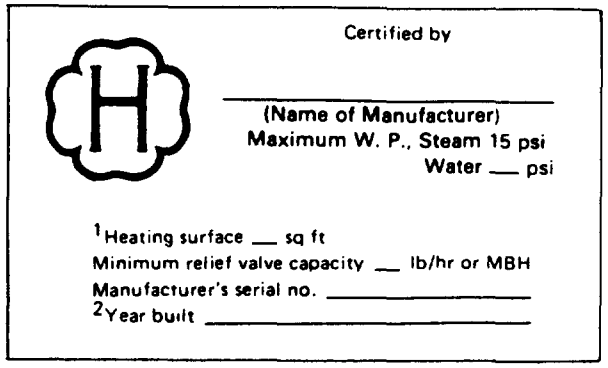

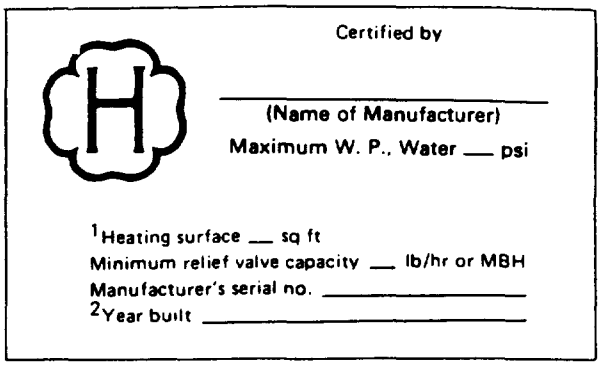

NOTES:
Acceptable abbreviations to any of the stamp wording may be used.
(1) Kilowatt power input for electric boilers.
(2) May be omitted when year built is prefix to serial number (see HG-530.1).

FIG. HG-530.2 STEAM AND WATER BOILERS

FIG. HG-530.3 BOILERS SUITABLE FOR WATER ONLY

removed, the stamping or nameplate on the boiler proper can be viewed;

(3) the required data are duplicated by stamping or marking with letters at least $\frac{1}{8}$ in. high on a nonferrous nameplate at least 3 in. × 4 in. size and permanently attaching the nameplate to the casing in some conspicuous place by mechanical means or by an adhesive system meeting the requirements of Appendix J.

(e) The Code Symbol may be preapplied to a nameplate. The nameplate may be attached to the boiler after the final fabrication and examination sequence but before the hydrostatic test, provided the procedure for sequence of stamping is described in the manufacturer's accepted quality control system. The Code Symbol and manufacturer's serial number shall be stamped on nameplates but the other data may be stamped, etched, cast, or impressed thereon.

(f) The ASME Code Symbol Stamp(s) shall not be used by an organization to which it was not issued.

HG-530.2 Marking Requirements for Cast Iron Boilers

(a) All boiler parts or sections to which the Code Symbol is to be applied shall be built according to the rules of this Section by a manufacturer[1] who is in possession of a Code Symbol Stamp and a valid Certificate of Authorization. Each boiler section, including end and intermediate cored sections, shall be cast with the Code Symbol shown in Fig. HG-530.1 and with the following data cast in letters or numerals at least $\frac{5}{16}$ in. high:

(1) the boiler or parts manufacturer's[1] name or acceptable abbreviation, preceded by the words "Certified by:" (or "Cert. by" on cast iron boiler sections only where space for marking is limited; the abbreviation "Cert. by" shall not be used on nameplates);

(2) maximum allowable working pressure[2]

(3) pattern number;

(4) casting date;

(5)[3] the shop assembler's[4] name or acceptable abbreviation (if different from manufacturer).

Arrangement of data cast on sections shall be substantially as shown in Fig. HG-530.4 or Fig. HG-530.5.

Other data may be cast on the sections. The marking "ASME" or "ASME standard" shall not be used.

(b) When the boiler size and number of sections have been decided, the completed boiler shall be marked

[1] The foundry which casts the boiler parts or sections and which may shop assemble.

[2] May be stamped.

[3] Optional.

[4] The shop which assembles sections into boilers and which is in possession of a Code Symbol Stamp and valid Certificate of Authorization.

RS-002936
1/17/02
NUECES

FORM OF DATA CAST ON CAST IRON BOILER SECTIONS

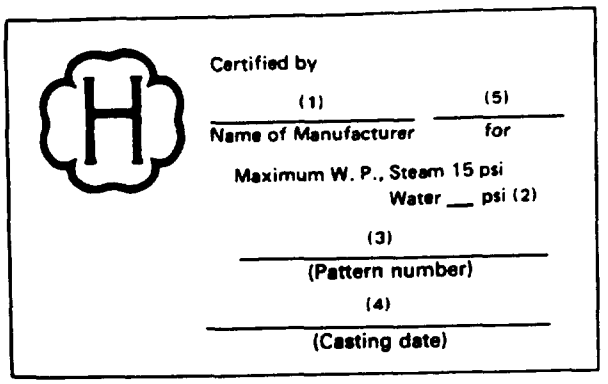

FIG. HG-530.4 STEAM AND WATER BOILERS

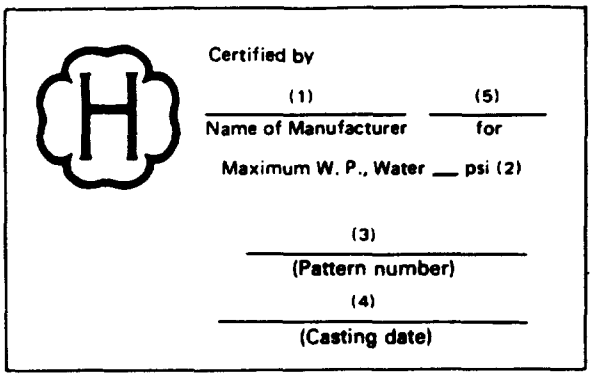

FIG. HG-530.5 BOILERS SUITABLE FOR WATER ONLY

NOTE: (1) through (5) refer to HG-530.2(a)(1)–(a)(5); (5) is optional.

with the Code Symbol shown in Fig. HG-530.1 and with the following data:

(1) the shop assembler's name preceded by the words "Certified by;"

(2) maximum allowable working pressure;

(3) safety or safety relief valve capacity (minimum), lb/hr or MBH, as determined according to HG-400.1(e) and HG-400.2(d).

(c) The markings for the completed boiler shall be arranged substantially as shown in Fig. HG-530.6 or Fig. HG-530.7.

(d) The provisions of (b) above shall be met utilizing one of the following methods:

(1) stamping the required markings on a nonferrous nameplate at least 3 in. × 4 in. in size and $^{3}/_{64}$ in. thick using letters and numerals at least $^{1}/_{8}$ in. high and permanently attaching the nameplate to the boiler proper in some conspicuous place. The nameplate shall not be covered with insulating or other material except that when a jacket or other form of casing is applied to a boiler, an opening with a removable cover shall be provided for viewing the required stamping.

(2) stamping the required markings directly into the boiler casing in some conspicuous place using letters and numerals at least $^{5}/_{16}$ in. high;

(3) stamping or marking the required data on a nonferrous or nonmetallic nameplate at least 3 in. × 4 in. in size using letters and numerals at least $^{1}/_{8}$ in. high and permanently attaching the nameplate to the casing in some conspicuous place by mechanical means or by an adhesive system. The nameplate and the adhesive system shall meet the requirements of Appendix 3.

Other data may be stamped on the casing or the nameplate provided the required markings are distinct and separate from the other data. The marking "ASME" or "ASME standard" shall not be used.

(4) the Code Symbol may be preapplied to a nameplate.

(5) the ASME Code Symbol Stamp(s) shall not be used by an organization to which it was not issued.

HG-531 STAMPING OF PARTS AND ACCESSORIES

(a) Parts of boilers for which Partial Data Reports are required by HG-520.2 shall be marked with the following:

(1) the official Code Symbol shown in Fig. HG-530.1 above the word "Part;"

(2) the part manufacturer's name;

(3) the part manufacturer's serial number.

RS-002937
1/17/02
NUECES

FORM OF STAMPING ON COMPLETED CAST IRON BOILERS OR THEIR NAMEPLATES

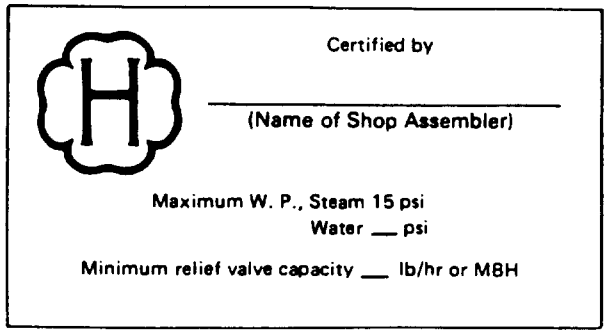

FIG. HG-530.6 STEAM AND WATER BOILERS

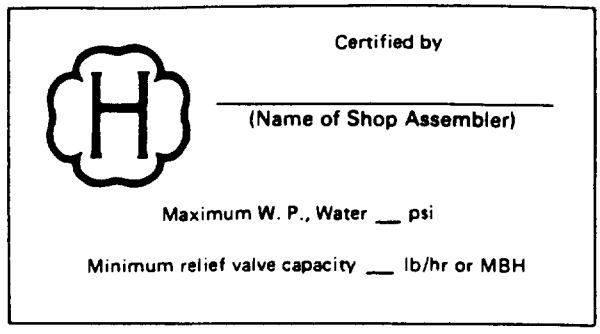

FIG. HG-530.7 BOILERS SUITABLE FOR WATER ONLY

(b) No part or accessory of a boiler may be marked with the Code Symbol shown in Fig. HG-530.1 unless so specified in the Code. The markings "ASME" or "ASME standard" shall not be used.

HG-532 STAMPING OF FIELD ASSEMBLED WROUGHT BOILERS

HG-532.1 Responsibility of Manufacturer of Boiler Unit. When a boiler manufactured of wrought material is furnished by one manufacturer and is not assembled and subjected to hydrostatic test prior to shipment, the manufacturer of the boiler unit shall compile a Manufacturer's Data Report Form H-2 or H-3 recording all items of the complete boiler unit.

HG-532.2 Execution of Manufacturer's Data Report. The Manufacturer's Data Report shall be properly executed by the manufacturer and the Authorized Inspector, who shall sign the certificate of shop inspection certifying that each enumerated item which has been inspected at the shop conforms to the requirements of the ASME Code. The manufacturer in signing each Data Report shall state under his signature the expiration date on the Certificate of Authorization to use the Symbol.

HG-532.3 Application of Stamping and Signing Data Sheets. Proper stamping as required by HG-530.2 shall be applied at the shop and the data sheets shall be signed by the same or different Inspectors who shall indicate the portions of the inspections made at the shop and in the field.

HG-533 INSPECTION AND STAMPING OF FIELD ASSEMBLED BOILER PRESSURE PARTS

HG-533.1 Authorized Assemblers and Welders. The assembly of any parts or subassemblies of the unit that requires welding shall be made by one possessing a heating boiler stamp. The welding of any parts or subassemblies during field assembly shall be done by persons who meet the requirements of HW-610.

HG-533.2 Execution of Data Report Sheet. When the assembly is made by anyone other than the manufacturer of the boiler unit, the Data Report sheet properly executed in accordance with HG-532 shall be forwarded to the assembler who shall be responsible for the proper handling of the Data Report and who shall fill in such items as are not filled in at the shop, and sign the Data Sheet as the "assembler" or "assembling organization" instead of "manufacturer." He shall also append, above his signature, the statement: "We certify that the field assembly of all parts conform with the requirements of the ASME Boiler and Pressure Vessel Code."

RS-002938
1/17/02
NUECES

to the heating elements before the surface of the water falls below the visible part of the glass.

(e) Tubular water glasses on electric boilers having a normal water content not exceeding 100 gal shall be equipped with a protective shield.

HG-604 WATER COLUMN AND WATER LEVEL CONTROL PIPES

(a) The minimum size of ferrous or nonferrous pipes connecting a water column to a steam boiler shall be 1 in. No outlet connections, except for damper regulator, feedwater regulator, steam gages, or apparatus which does not permit the escape of any steam or water except for manually operated blowdowns, shall be attached to a water column or the piping connecting a water column to a boiler (see HG-705 for introduction of feedwater into a boiler). If the water column, gage glass, low-water fuel cutoff, or other water level control device is connected to the boiler by pipe and fittings, no shutoff valves of any type shall be placed in such pipe, and a cross or equivalent fitting to which a drain valve and piping may be attached shall be placed in the water piping connection at every right angle turn to facilitate cleaning. The water column drain pipe and valve shall be not less than NPS $\frac{3}{4}$.

(b) The steam connections to the water column of a horizontal firetube wrought boiler shall be taken from the top of the shell or the upper part of the head, and the water connection shall be taken from a point not above the center line of the shell. For a cast iron boiler, the steam connection to the water column shall be taken from the top of an end section or the top of the steam header, and the water connection shall be made on an end section not less than 6 in. below the bottom connection to the water gage glass.

HG-605 PRESSURE CONTROL

Each automatically fired steam boiler shall be protected from overpressure by two pressure-operated controls.

(a) Each individual automatically fired steam boiler shall have a safety limit control that will cut off the fuel supply to prevent steam pressure from exceeding the 15 psi maximum allowable working pressure of the boiler. Each control shall be constructed to prevent a pressure setting above 15 psi.

(b) Each individual steam boiler or each system of commonly connected steam boilers shall have a control that will cut off the fuel supply when the pressure reaches an operating limit, which shall be less than the maximum allowable pressure.

(c) Shutoff valves of any type shall not be placed in the steam pressure connection between the boiler and the controls described in (a) and (b) above. These controls shall be protected with a syphon or equivalent means of maintaining a water seal that will prevent steam from entering the control. The connections to the boiler shall not be less than NPS $\frac{1}{4}$, but where steel or wrought iron pipe or tubing is used, they shall not be less than NPS $\frac{1}{2}$. The minimum size of a syphon shall be NPS $\frac{1}{4}$ or $\frac{3}{8}$ in. O.D. nonferrous tubing.

HG-606 AUTOMATIC LOW-WATER FUEL CUTOFF AND/OR WATER FEEDING DEVICE

(a) Each automatically fired steam or vapor-system boiler shall have an automatic low-water fuel cutoff so located as to automatically cut off the fuel supply when the surface of the water falls to the lowest visible part of the water gage glass. If a water feeding device is installed, it shall be so constructed that the water inlet valve cannot feed water into the boiler through the float chamber and so located as to supply requisite feedwater.

(b) Such a fuel cutoff or water feeding device may be attached directly to a boiler. A fuel cutoff or water feeding device may also be installed in the tapped openings available for attaching a water glass direct to a boiler, provided the connections are made to the boiler with nonferrous tees or Y's not less than NPS $\frac{1}{2}$ between the boiler and the water glass so that the water glass is attached directly and as close as possible to the boiler; the run of the tee or Y shall take the water glass fittings, and the side outlet or branch of the tee or Y shall take the fuel cutoff or water feeding device. The ends of all nipples shall be reamed to full-size diameter.

(c) Fuel cutoffs and water feeding devices embodying a separate chamber shall have a vertical drain pipe and a blowoff valve not less than NPS $\frac{3}{4}$, located at the lowest point in the water equalizing pipe connections so that the chamber and the equalizing pipe can be flushed and the device tested.

HG-607 MODULAR STEAM HEATING BOILERS

(a) Each module of a modular steam heating boiler shall be equipped with:

RS-002939
1/17/02
NUECES

(1) steam gage, see HG-602
(2) water gage glass, see HG-603
(3) pressure control, see HG-605(a)
(4) low water cutoff, see HG-606

(b) The assembled modular steam boiler shall also be equipped with pressure control, see HG-605(b).

HG-610 FOR HOT WATER HEATING OR HOT WATER SUPPLY BOILERS

HG-611 PRESSURE OR ALTITUDE GAGES

(a) Each hot water heating or hot water supply boiler shall have a pressure or altitude gage connected to it or to its flow connection in such a manner that it cannot be shut off from the boiler except by a cock with tee or lever handle, placed on the pipe near the gage. The handle of the cock shall be parallel to the pipe in which it is located when the cock is open.

(b) The scale on the dial of the pressure or altitude gage shall be graduated approximately to not less than 1½ nor more than three times the pressure at which the safety relief valve is set.

(c) Piping or tubing for pressure- or altitude-gage connections shall be of nonferrous metal when smaller than NPS 1.

HG-612 THERMOMETERS

Each hot water heating or hot water supply boiler shall have a thermometer so located and connected that it shall be easily readable when observing the water pressure or altitude. The thermometer shall be so located that it shall at all times indicate the temperature in degrees Fahrenheit of the water in the boiler at or near the outlet.

HG-613 TEMPERATURE CONTROL

Each automatically fired hot water heating or hot water supply boiler shall be protected from over-temperature by two temperature-operated controls.

(a) Each individual automatically fired hot water heating or hot water supply boiler shall have a safety limit control that will cut off the fuel supply to prevent water temperature from exceeding the maximum allowable temperature of 250°F at the boiler outlet. This water temperature safety control shall be constructed to prevent a temperature setting above 250°F.

(b) Each individual hot water heating or hot water supply boiler or each system of commonly connected boilers without intervening valves shall have a control that will cut off the fuel supply when the water temperature reaches an operating limit, which shall be less than the maximum allowable temperature.

HG-614 LOW-WATER FUEL CUTOFF

(a) Each automatically fired hot water boiler with heat input greater than 400,000 Btu/hr shall have an automatic low-water fuel cutoff which has been designed for hot water service, and it shall be so located as to automatically cut off the fuel supply when the surface of the water falls to the level established in (b) below (see Fig. HG-703.2).

(b) As there is no normal waterline to be maintained in a hot water boiler, any location of the low-water fuel cutoff above the lowest safe permissible water level established by the boiler manufacturer is satisfactory.

(c) A coil-type boiler or a watertube boiler with heat input greater than 400,000 Btu/hr requiring forced circulation to prevent overheating of the coils or tubes shall have a flow-sensing device installed in lieu of the low-water fuel cutoff required in (a) above to automatically cut off the fuel supply when the circulating flow is interrupted.

HG-615 MODULAR HOT WATER HEATING BOILERS

(a) Each module of a modular hot water heating boiler shall be equipped with:
(1) pressure/altitude gage, see HG-611
(2) thermometer, see HG-612
(3) temperature control, see HG-613(a)

(b) The assembled modular hot water heating boiler shall also be equipped with:
(1) temperature control, see HG-613(b)
(2) low water fuel cutoff, see HG-614

HG-620 FOR ALL BOILERS

HG-621 INSTRUMENTS, FITTINGS, AND CONTROLS MOUNTED INSIDE BOILER JACKETS

Any or all instruments, fittings, and controls required by these rules may be installed inside of boiler jackets provided the water gage on a steam boiler is accessible without the use of tools and provided the water gage and pressure gage on a steam boiler or the thermometer and pressure gage on a water boiler are visible through an opening or openings at all times.

RS-002940
1/17/02
NUECES

to boilers by providing substantial anchorage at suitable points and by providing swing joints when boilers are installed in batteries, so there will be no undue strain transmitted to the boilers. See Figs. HG-703.1(a), HG-703.1(b), and HG-703.2 for typical schematic arrangements of piping incorporating strain absorbing joints for steam and hot water heating boilers.

HG-703.2 Return Pipe Connections

(a) The return pipe connections of each boiler supplying a gravity return steam heating system shall be so arranged as to form a loop substantially as shown in Fig. HG-703.1 so that the water in each boiler cannot be forced out below the safe water level.

(b) For hand-fired boilers with a normal grate line, the recommended pipe sizes detailed as "A" in Fig. HG-703.1 are NPS 1½ for 4 sq ft or less firebox area at the normal grate line, NPS 2½ for areas more than 4 sq ft up to 14.9 sq ft, and NPS 4 for 15 sq ft or more.

(c) For automatically fired boilers which do not have a normal grate line, the recommended pipe sizes detailed as "A" in Fig. HG-703.1 are NPS 1½ for boilers with minimum safety valve relieving capacity 250 lb/hr or less, NPS 2½ for boilers with minimum safety valve relieving capacity from 251 lb/hr to 2000 lb/hr, inclusive, and NPS 4 for boilers with more than 2000 lb/hr minimum safety valve relieving capacity.

(d) Provision shall be made for cleaning the interior of the return piping at or close to the boiler.

HG-705 FEEDWATER AND MAKEUP WATER CONNECTIONS

(a) Steam Boilers. Feedwater or water treatment shall be introduced into a boiler through the return piping system. Alternatively, feedwater or water treatment may be introduced through an independent connection. The water flow from the independent connection shall not discharge directly against parts of the boiler exposed to direct radiant heat from the fire. Feedwater or water treatment shall not be introduced through openings or connections provided for inspection or cleaning, safety valve, water column, water gage glass, or pressure gage. The feedwater pipe shall be provided with a check valve near the boiler and a stop valve or cock between the check valve and the boiler or between the check valve and the return pipe system.

(b) Hot Water Boilers. Makeup water may be introduced into a boiler through the piping system or through an independent connection. The water flow from the independent connection shall not discharge directly against parts of the boiler exposed to direct radiant heat from the fire. Makeup water shall not be introduced through openings or connections provided exclusively for inspection or cleaning, safety relief valve, pressure gage, or temperature gage. The makeup water pipe shall be provided with a check valve near the boiler and a stop valve or cock between the check valve and the boiler or between the check valve and the piping system.

HG-707 OIL HEATERS

(a) A heater for oil or other liquid harmful to boiler operation shall not be installed directly in the steam or water space within a boiler.

(b) Where an external type heater for such service is used, means shall be provided to prevent the introduction into the boiler of oil or other liquid harmful to boiler operation.

HG-709 PROVISIONS FOR THERMAL EXPANSION IN HOT WATER SYSTEMS

All hot water heating systems incorporating hot water tanks or fluid relief columns shall be so installed as to prevent freezing under normal operating conditions.

HG-709.1 Systems With Open Expansion Tank. If the system is equipped with an open expansion tank, an indoor overflow from the upper portion of the expansion tank shall be provided in addition to an open vent, the indoor overflow to be carried within the building to a suitable plumbing fixture or the basement.

HG-709.2 Closed Type Systems. If the system is of the closed type, an airtight tank or other suitable air cushion shall be installed that will be consistent with the volume and capacity of the system, and it shall be suitably designed for a hydrostatic test pressure of 2½ times the allowable working pressure of the system. Expansion tanks for systems designed to operate above 30 psi shall be constructed in accordance with Section VIII, Division 1. Provisions shall be made for draining the tank without emptying the system, except for prepressurized tanks.

HG-709.3 Minimum Capacity of Closed Type Tank. The minimum capacity of the closed type expansion tank may be determined from Tables HG-709.1 and HG-709.2 or from the following formula where the necessary information is available:

RS-002841
1/17/02
NUECES

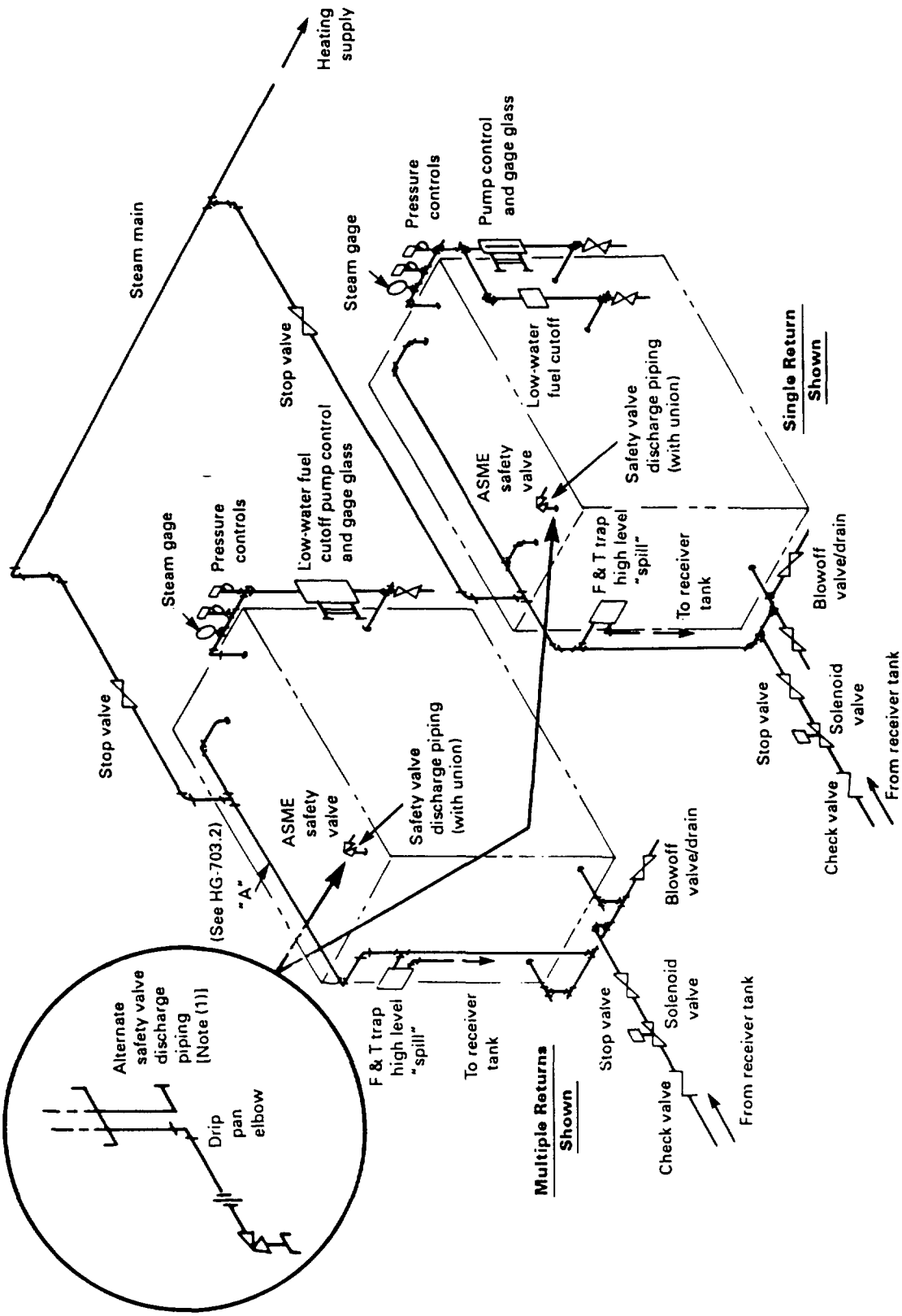

GENERAL NOTE:
Return connections shown for a multiple boiler installation may not always insure that the system will operate properly. In order to maintain proper water levels in multiple boiler installations, it may be necessary to install supplementary controls or suitable devices.

NOTE:
(1) Recommended for 1 in. and larger safety valve discharge.

FIG. HG-703.1(a) STEAM BOILERS IN BATTERY — PUMPED RETURN — ACCEPTABLE PIPING INSTALLATION

RS-002942
1/17/02
NUECES

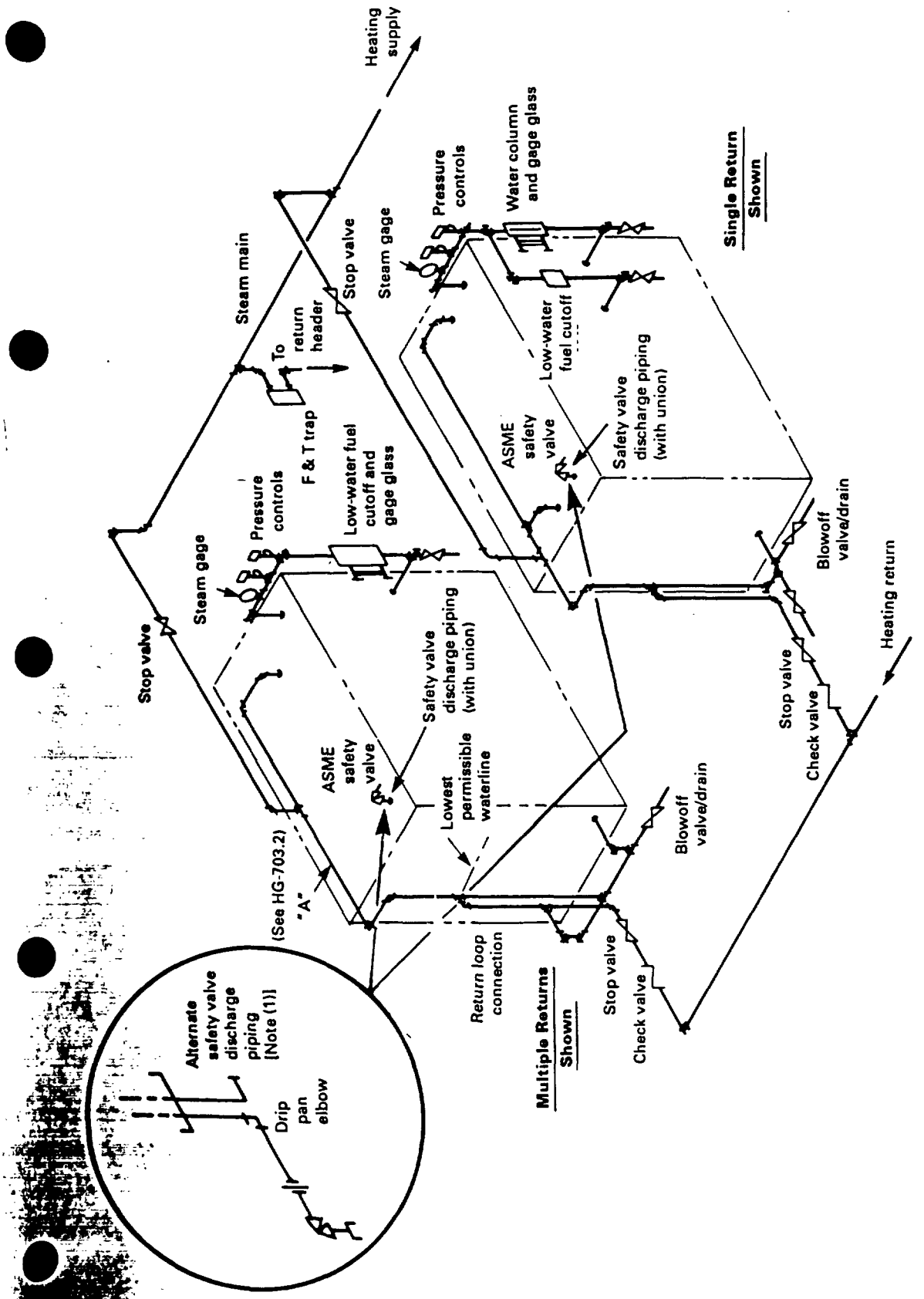

GENERAL NOTE:
Return connections shown for a multiple boiler installation may not always insure that the system will operate properly. In order to maintain proper water levels in multiple boiler installations, it may be necessary to install supplementary controls or suitable devices.

NOTE:
(1) Recommended for 1 in. and larger safety valve discharge.

FIG. HG-703.1(b) STEAM BOILERS IN BATTERY — GRAVITY RETURN —ACCEPTABLE PIPING INSTALLATION

RS-002943
1/17/02
NUECES

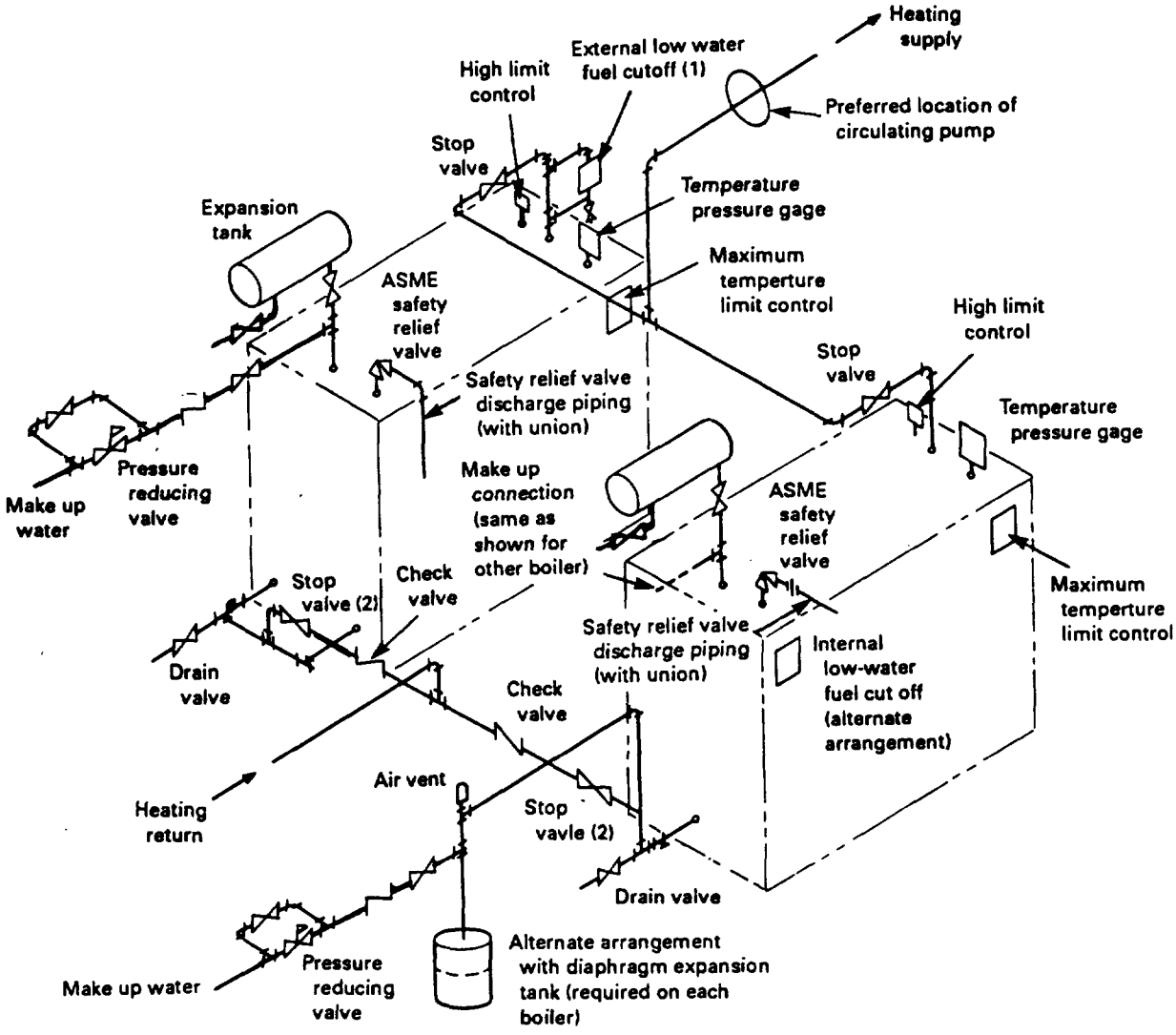

NOTES:

(1) Recommended control. See HG-614. Acceptable shutoff valves or cocks in the connecting piping may be installed for convenience of control testing and/or service.

(2) The common return header stop valves may be located on either side of the check valves.

FIG. HG-703.2 HOT WATER BOILERS IN BATTERY — ACCEPTABLE PIPING INSTALLATION

RS-002944
1/17/02
NUECES

TABLE HG-709.1
EXPANSION TANK CAPACITIES FOR GRAVITY HOT WATER SYSTEMS
Based on two-pipe system with average operating water temperature 170°F, using cast iron column radiation with heat emission rate 150 Btu/hr sq ft equivalent direction radiation

Installed Equivalent Direct Radiation, sq ft [Note (1)]	Tank Capacity, gal
Up to 350	18
Up to 450	21
Up to 650	24
Up to 900	30
Up to 1100	35
Up to 1400	40
Up to 1600	2–30
Up to 1800	2–30
Up to 2000	2–35
Up to 2400	2–40

NOTE:
(1) For systems with more than 2400 sq ft of installed equivalent direct water radiation, the required capacity of the cushion tank shall be increased on the basis of 1 gal tank capacity/33 sq ft of additional equivalent direct radiation.

TABLE HG-709.2
EXPANSION TANK CAPACITIES FOR FORCED HOT WATER SYSTEMS[1]
Based on average operating water temperature 195°F, fill pressure 12 psig, and maximum operating pressure 30 psig

System Volume, gal	Tank Capacities, gal	
	Prepressurized Diaphragm Type	Nonprepressurized Type
100	9	15
200	17	30
300	25	45
400	33	60
500	42	75
1000	83	150
2000	165	300

NOTE:
(1) System volume includes volume of water in boiler, radiation, and piping, not including the expansion tank. Expansion tank capacities are based on an acceptance factor of 0.4027 for prepressurized types and 0.222 for nonprepressurized types. A procedure for estimating system volume and determining expansion tank sizes for other design conditions may be found in Chapter 13 of the 1987 Systems and Applications Volume of the ASHRAE Handbook.

$$V_t = [(0.00041T - 0.0466)V_s]/[(P_a/P_f) - (P_a/P_o)]$$

where
V_t = minimum volume of tanks, gal
V_s = volume of system, not including tanks, gal
T = average operating temperature, °F
P_a = atmospheric pressure, psi
P_f = fill pressure, psi
P_o = maximum operating pressure, psi

HG-709.4 Provisions for Thermal Expansion in Hot Water Supply Systems. If a system is equipped with a check valve or pressure reducing valve in the cold water inlet line, consideration should be given to the installation of an airtight expansion tank or other suitable air cushion. Otherwise, due to the thermal expansion of the water, the safety relief valve may lift periodically. If an expansion tank is provided, it shall be constructed in accordance with Section VIII, Division 1, for a maximum allowable working pressure equal to or greater than the water heater. Except for prepressurized tanks, provisions shall be made for draining the tank without emptying the system. See Fig. HLW-703.2 for a typical acceptable installation.

HG-710 STOP VALVES

HG-710.1 For Single Steam Boilers. When a stop valve is used in the supply pipe connection of a single steam boiler, there shall be one used in the return pipe connection.

HG-710.2 For Single Hot Water Heating Boilers

(a) Stop valves shall be located at an accessible point in the supply and return pipe connections as near the boiler nozzle as is convenient and practicable, of a single hot water heating boiler installation to permit draining the boiler without emptying the system.

(b) When the boiler is located above the system and can be drained without draining the system, stop valves may be eliminated.

HG-710.3 For Multiple Boiler Installations. A stop valve shall be used in each supply and return pipe connection of two or more boilers connected to a common system. See Figs. HG-703.1 and HG-703.2.

HG-710.4 Type of Stop Valve(s)

(a) All valves or cocks shall conform with the applicable portions of HF-203 and may be ferrous or nonferrous.

(b) The minimum pressure rating of all valves or cocks shall be at least equal to the pressure stamped upon the boiler, and the temperature rating of such

RS-002945
1/17/02
NUECES

valves or cocks, including all internal components, shall be not less than 250°F.

(c) Valves or cocks shall be flanged, threaded or have ends suitable for welding or brazing.

(d) All valves or cocks with stems or spindles shall have adjustable pressure type packing glands and, in addition, all plug type cocks shall be equipped with a guard or gland. The plug or other operating mechanism shall be distinctly marked in line with the passage to indicate whether it is opened or closed.

(e) All valves or cocks shall have tight closure when under boiler hydrostatic test pressure.

HG-710.5 Identification of Stop Valves by Tags. When stop valves are used, they shall be properly designated substantially as follows by tags of metal or other durable material fastened to them:

Supply Valve – Number ( )

Do Not Close Without Also Closing Return Valve – Number ( )

Return Valve – Number ( )

Do Not Close Without Also Closing Supply Valve – Number ( )

HG-715 BOTTOM BLOWOFF AND DRAIN VALVES

(a) Bottom Blowoff Valve. Each steam boiler shall have a bottom blowoff connection fitted with a valve or cock connected to the lowest water space practicable with a minimum size as shown in Table HG-715. The discharge piping shall be full size to the point of discharge.

(b) Boilers having a capacity of 25 gal or less are exempt from the above requirements, except that they must have a $\frac{3}{4}$ in. NPS minimum drain valve.

(c) Drain Valve. Each steam or hot water boiler shall have one or more drain connections, fitted with valves or cocks connecting to the lowest water containing spaces. The minimum size of the drain piping, valves, and cocks shall be $\frac{3}{4}$ in. The discharge piping shall be full size to the point of discharge. When the blowoff connection is located at the lowest water containing space, a separate drain connection is not required.

(d) Minimum Pressure Rating. The minimum pressure rating of valves and cocks used for blowoff or drain purposes shall be at least equal to the pressure stamped on the boiler but in no case less than 30 psi.

TABLE HG-715
SIZE OF BOTTOM BLOWOFF PIPING, VALVES, AND COCKS

Minimum Required Safety Valve Capacity, lb of steam/hr [Note (1)]	Blowoff Piping, Valves, and Cocks Size, in. (min.)
Up to 500	$\frac{3}{4}$
501 to 1250	1
1251 to 2500	$1\frac{1}{4}$
2501 to 6000	$1\frac{1}{2}$
6001 and larger	2

NOTE:
(1) To determine the discharge capacity of safety relief valves in terms of Btu, the relieving capacity in lb of steam/hr is multiplied by 1000.

The temperature rating of such valves and cocks shall not be less than 250°F.

HG-716 MODULAR BOILERS

(a) Individual Modules

(1) The individual modules shall comply with all the requirements of Part HG, except as specified in HG-607, HG-615, and this paragraph. The individual modules shall be limited to a maximum input of 400,000 Btuh (gas), 3 gal/hr (oil), or 115 kW (electricity).

(2) Each module of a steam heating boiler shall be equipped with:

(a) safety valve, see HG-701

(b) blowoff valve, see HG-715(a)

(c) drain valve, see HG-715(c)

(3) Each module of a modular hot water heating boiler shall be equipped with:

(a) safety relief valve, see HG-701

(b) drain valve, see HG-715(c)

(b) Assembled Modular Boilers

(1) The individual modules shall be manifolded together at the job-site without any intervening valves. The header or manifold piping is field piping and is exempt from Article 2, Part HG, HF, HB, or HC.

(2) The assembled modular steam heating boiler shall also be equipped with:

(a) feedwater connection, see HG-705(a)

(b) return pipe connection, see HG-703.2

(3) The assembled modular hot water heating boiler shall also be equipped with:

(a) makeup water connection, see HG-705(b)

(b) provision for thermal expansion, see HG-709

(c) stop valves, see HG-710.2

RS-002946
1/17/02
NUECES

HF-206 RECERTIFICATION OF MATERIAL PRODUCED TO A SPECIFICATION NOT PERMITTED BY THIS SECTION

A particular production lot of material may be recertified to a permitted specification by the boiler or part manufacturer under the following conditions.

(a) The specification to which the material was produced, processed, and purchased must be available for comparison to the permitted specification.

(b) A test report from the material manufacturer must be available.

(c) The material must have marking, acceptable to the Inspector, for identification to the test report.

(d) The test report must show that all chemical and mechanical properties of the lot comply with the requirements of the permitted specification.

(e) When conformance of the lot to the permitted specification has been established, it may be accepted and marked, as required by the permitted specification, by the boiler or part manufacturer.

HF-210 MAINTAINING MATERIAL IDENTIFICATION

(a) Material for pressure parts shall carry identification markings as required by the applicable material specification. If the original identification markings are cut out or the material is divided into two or more parts, the marking shall either be accurately transferred prior to cutting or a coded method of identification shall be used to assure identification of each piece of material during subsequent fabrication.

(b) Materials may be identified by any method suitable to the Inspector, provided the method used does not result in sharp discontinuities and identifies the material until the boiler is completed.

RS-002847
1/17/02
NUECES

ARTICLE 3
DESIGN STRESSES AND MINIMUM THICKNESSES

HF-300 MAXIMUM ALLOWABLE STRESS VALUES

Tables HF-300.1 and HF-300.2 give the maximum allowable stress values indicated for ferrous and nonferrous materials, respectively, conforming to the specifications listed therein.

HF-301 MINIMUM THICKNESSES[1]

HF-301.1 Ferrous Plates

(a) Except as permitted in (c) below and for cylindrical shells in Table HF-301.1, the minimum thickness of any ferrous plate, or pipe used in lieu of plate, under any pressure shall be $\frac{1}{4}$ in.

(b) The minimum thicknesses of ferrous shell and other ferrous plates, heads, and tubesheets for various shell diameters of boilers shall be as shown in Table HF-301.1. All sheets, except those having tubes installed by rolling, or those calculated as cylindrical parts under external pressure (HG-312.1 to HG-312.6), may be classified as shell plates.

(c) Plate thickness less than that permitted by HF-301.1(a) and HF-301.1(b) may be used when all of the following requirements are met.

(1) The operating service shall be limited to closed forced hot water heating systems at a maximum pressure of 30 psi.

(2) The internal water volume shall be limited to not over 231 cu in.

(3) All pressure parts shall be limited to a maximum diameter of 10 in.

(4) The boiler shall be limited to a maximum thermal input of 400,000 Btu/hr.

(5) No plate shall be less than $\frac{3}{32}$ in. (actual thickness), but if less than $\frac{3}{16}$ in. (actual thickness), the plate shall not be exposed to the primary products of combustion.

HF-301.2 Nonferrous Plates

(a) The minimum thickness of any nonferrous plate under pressure shall be $\frac{1}{8}$ in. for copper, admiralty, and red brass, and $\frac{3}{32}$ in. for copper–nickel.

(b) The minimum thicknesses of nonferrous shells and other copper or copper-alloy plates, heads, and tubesheets for various shell diameters of boilers shall be as shown in Table HF-301.2. All sheets, except those having tubes installed by rolling, may be classified as shell plates.

(c) The minimum thickness of any nonferrous tubesheet with tubes installed by rolling shall be $\frac{5}{16}$ in.

HF-302 BASIS FOR ESTABLISHING STRESS VALUES IN TABLES HF-300.1 AND HF-300.2

(a) In the determination of allowable stress values for pressure parts, the Committee is guided by successful experience in service, insofar as evidence of satisfactory performance is available. Such evidence is considered equivalent to test data where operating conditions are known with reasonable certainty. In the evaluation of new materials, it is necessary to be guided to a certain extent by the comparison of test information with similar data on successful applications of similar materials.

(b) At any temperature below the creep range, the allowable stresses are established at no higher than the lowest of the following:

(1) $\frac{1}{5}$ of the specified minimum tensile strength at room temperature;

(2) $\frac{1}{5}$ of the tensile strength at temperature;

[1] These minimum thicknesses for pressure shall not be less than required by design formulas in Part HG, Article 3, nor less than those thicknesses established by proof testing in Part HG, Article 5.

RS-002948
1/17/02
NUECES

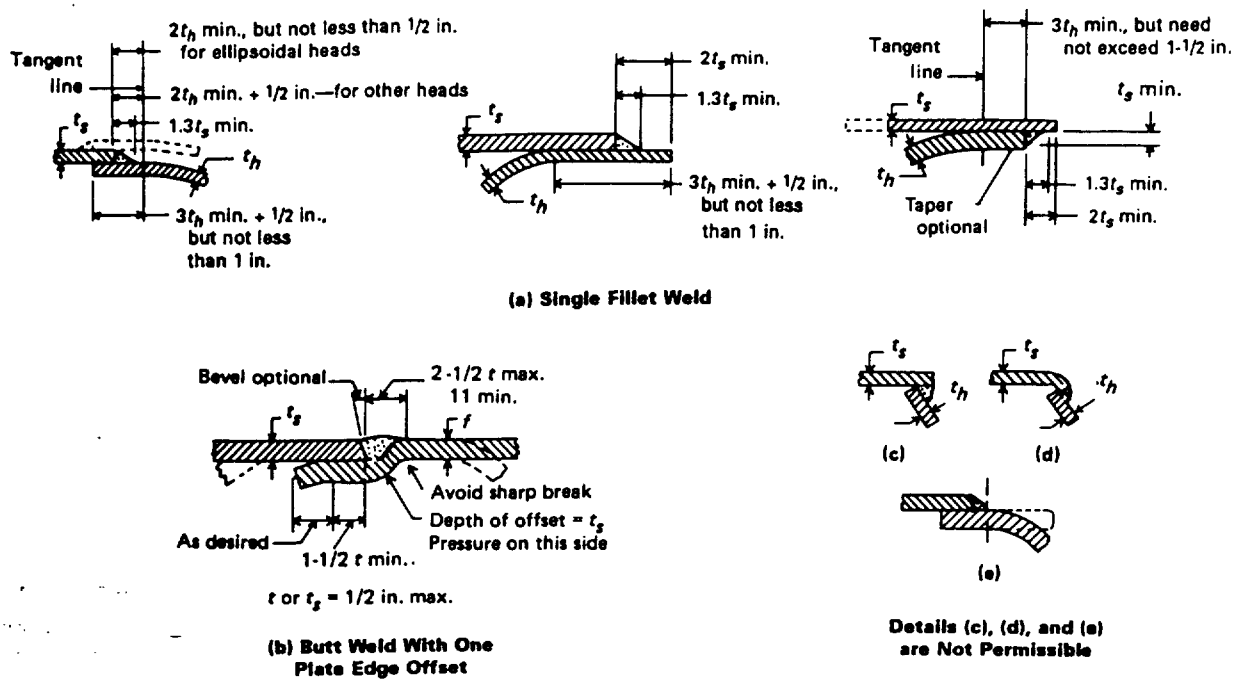

FIG. HW-715.1 HEADS ATTACHED TO SHELLS

offset shall be smooth and symmetrical and shall not be machined or otherwise reduced in thickness. There shall be a uniform force fit with the mating section at the root of the weld.

(b) Ellipsoidal or torispherical heads, concave or convex to the pressure, shall have a skirt length not less than that shown in Fig. HW-715.1 provided the welded joint is not in contact with primary furnace gases.[1] Heads that are fitted inside or over a shell shall have a driving fit before welding.

(c) Formed heads of full hemispherical shape, concave to pressure, need not have an integral skirt, but where a skirt is provided for butt welded attachment, the thickness of the skirt shall be at least that required for a seamless cylindrical shell of the same diameter.

(d) Flanged ellipsoidal or torispherical heads convex to pressure may be attached to the shell with a full fillet weld with throat no less than 0.7 times the head thickness. The shell at the weld shall not be in contact with primary furnace gases.

HW-720 OPENINGS IN WELDS

Any type of opening that meets the requirements for reinforcement given in HG-321 may be located in a butt welded joint.

HW-730 WELDED CONNECTIONS

HW-730.1 Strength of Attachment Welds. Nozzles, other connections, and their reinforcement may be attached to a boiler by arc or gas welding. Sufficient welding shall be provided on either side of the line through the center of the opening parallel to the longitudinal axis of the shell to develop the strength of the shell as prescribed in HG-327 through shear or tension in the weld, whichever is applicable. The strength of groove welds shall be based on the area subjected to shear or to tension. The strength of fillet welds shall be based on the area subjected to shear, computed on the minimum leg dimension. The inside periphery of fillet weld shall be used in computing its length.

HW-730.2 Stress Values for Weld Metal. The allowable stress values for groove and fillet welds and for shear in nozzle necks in percentages of stress values for the vessel material are as follows:

Nozzle-wall shear	70%
Groove-weld tension	74%
Groove-weld shear	60%
Fillet-weld shear	49%

NOTE: These values are obtained by combining the following factors: 87½% for combined end and side loading, 80% for shear strength, and the applicable joint efficiency factors.

RS-002949
1/17/02
NUECES

HW-730.3 Telltale Holes in Reinforcement Plates and Saddles. Separate reinforcement plates and saddles used to reinforce the material around openings and that are attached to the outside of a boiler shall be provided with at least one telltale hole [maximum size: ¼ in. pipe tap] that may be tapped for a preliminary compressed-air and soapsuds test for tightness of welds that seal off the inside of the boiler. These telltale holes may be left open when the boiler is in service. If the holes are plugged, the plugging material used shall not be capable of sustaining pressure between the plate and the boiler wall.

HW-730.4 Stud Welds. Arc stud welding and resistance stud welding, as defined in E-101, where the boiler pressure exerts a tensile load on the studs, may be used only for the attachments of bolted unstayed flat heads, cover plates and blind flanges, handholes and manholes, with the further limitations as follows.

(a) Studs attached by stud welding shall not be in direct contact with products of combustion or flue gases.

(b) Where the pressure exerts a tensile load on the studs, a full face gasket must be used on flat heads, cover plates and blind flanges attached by stud welding.

(c) The minimum size stud used shall be not less than ¼ in. nominal diameter, and the maximum size shall not exceed ⅞ in. nominal diameter.

(d) The type of stud shall be limited to round externally threaded studs.

(e) Base metal shall be of ferrous material specification as permitted by this Section, and the base metal must be thick enough to prevent burn through. See HW-500(b) for stud material.

(f) The maximum spacing of studs shall not exceed 12 times the nominal diameter of the stud.

(g) The maximum allowable stress for the stud shall be 7800 psi based on the smallest cross-sectional area (i.e., the root of the thread).

HW-731 MINIMUM REQUIREMENTS FOR ATTACHMENT WELDS

HW-731.1 General. The location and minimum size of attachment welds for nozzles and other connections shall conform to the requirements in this paragraph.

(a) Notation. The symbols used in this paragraph and in Fig. HW-731 are defined as follows:

t = nominal thickness of boiler shell or head, in.

t_n = nominal thickness of nozzle wall, in.

t_w = dimension of partial penetration attachment welds (fillet, single-bevel, or single-J), measured as shown in Fig. HW-731, in.

t_c = not less than the smaller of ¼ in. or 0.7 $t_{min.}$ (inside corner welds may be further limited by a lesser length of projection of nozzle wall beyond the inside face of the boiler wall)

t_{min} = the smaller of ¾ in. or the thickness of the thinner of the parts joined by a fillet, single-bevel, or single-J weld, in.

t_1, t_2 = not less than the smaller of ¼ in. or 0.7 t_{min} and $t_1 + t_2$ not less than 1¼ t_{min}

HW-731.2 Necks Abutting the Boiler Shell

(a) Nozzles abutting the boiler shell shall be attached by a full penetration groove weld. Backing strips shall be used with welds deposited from only one side when the shell thickness is over ⅜ in. or when complete joint penetration cannot be verified by visual inspection [for example, see Fig. HW-731, sketch (y)].

(b) Nozzles or tubes recessed into thick boiler shells or headers may be welded from only one side by cutting a welding groove in the boiler shell to a depth of not less than t_n on the longitudinal axis of the opening. It is recommended that a recess at least 1/16 in. deep be provided at the bottom of the groove in which to center the nozzle. The dimension t_w of the attachment weld shall be not less than t_n or less than ¼ in. [for example, see Fig. HW-731, sketches (y) and (z)].

HW-731.3 Inserted Nozzles Without Added Reinforcement Elements

(a) Nozzles inserted into or through a hole cut in the boiler shell and without additional reinforcement elements shall be attached by a full penetration groove weld or by two partial penetration welds, one on each face of the boiler shell. Permissible types of welds are shown in Fig. HW-731, sketches (c) through (h).

(b) Backing strips shall be used with full penetration welds deposited from one side only when the shell thickness is over ⅜ in. or when complete joint penetration cannot be verified by visual inspection. The two partial penetration welds may be any desired combination of fillet, single-bevel, and single-J welds. The dimension t_w of each weld shall be not less than the smaller of ¼ in. or 0.7 t_{min} and their sum shall be not less than 1¼ t_{min} (see Fig. HW-731).

HW-731.4 Inserted Nozzles With Added Reinforcement. Inserted type nozzles having added reinforcement in the form of one or more separate reinforcement plates shall be attached by welds at the nozzle neck periphery and at the outer edge of each reinforcement plate. The weld at the outer edge of each reinforcement plate shall be a fillet weld with a minimum throat

RS-002950
1/17/02
NUECES

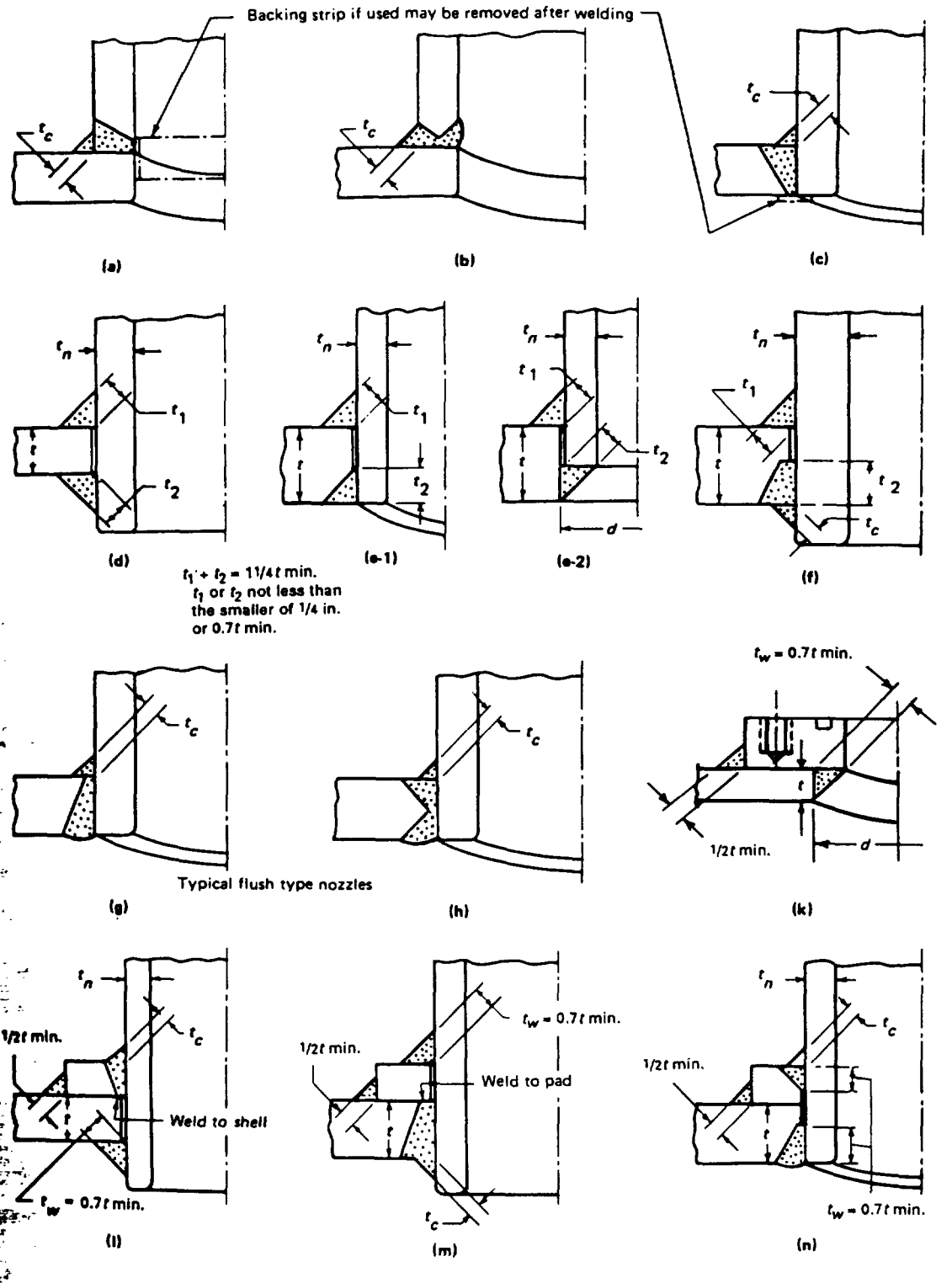

FIG. HW-731 SOME ACCEPTABLE TYPES OF WELDED NOZZLES AND OTHER CONNECTIONS TO SHELLS, DRUMS, AND HEADERS

RS-002961
1/17/02
NUECES

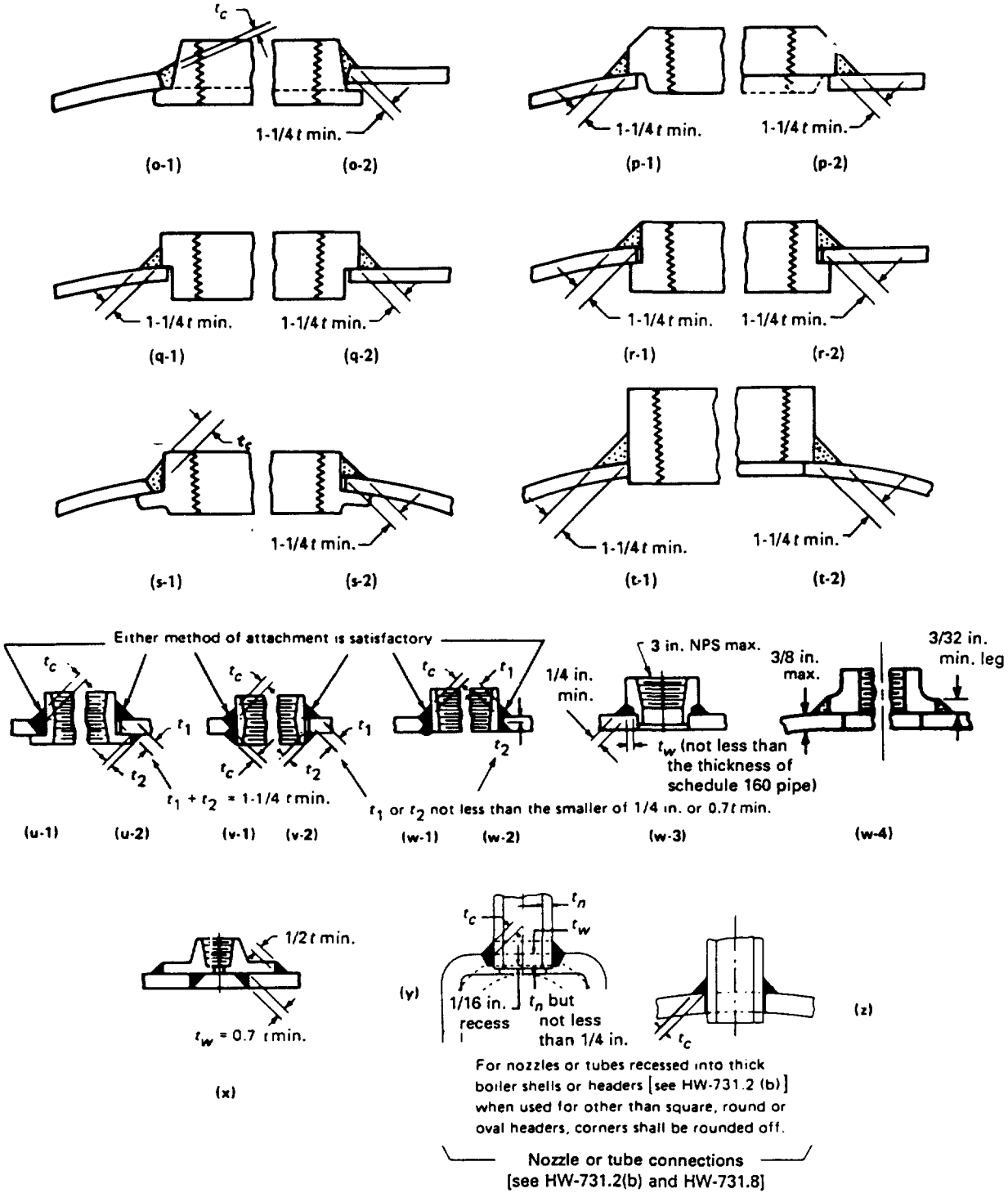

FIG. HW-731 SOME ACCEPTABLE TYPES OF WELDED NOZZLES AND OTHER CONNECTIONS TO SHELLS, DRUMS, AND HEADERS (CONT'D)

RS-002962
1/17/02
NUECES

ARTICLE 1
GENERAL

HC-100 SCOPE

The rules in Part HC are applicable to heating boilers that are constructed primarily of cast iron, and shall be used in conjunction with general requirements of Part HG of this Section.

RS-002953
1/17/02
NUECES

ARTICLE 2
MATERIAL REQUIREMENTS

HC-200 GENERAL MATERIAL REQUIREMENTS

All materials used for heating boilers that are constructed primarily of cast iron shall meet the requirements of this Article for gray iron castings.

HC-201 MANUFACTURE

The melting procedure shall be optional with the Manufacturer.

HC-202 CHEMICAL COMPOSITION

Drillings taken from test ingots, broken test specimens, or from castings, shall conform to the following as to chemical composition.

(a) The manganese shall be controlled as required to meet Mn $\geq$ (1.7 $\times$ S) + 0.2, where Mn is percent manganese and S is percent sulfur.

(b) The phosphorous content shall not exceed 1.00%.

HC-203 TENSILE STRENGTH CLASSIFICATION

Castings shall be known and listed by classes according to the minimum requirements as to tensile strengths of test bars, specified as follows:

Class No.	Tensile Strength Min., psi
20	20,000
25	25,000
30	30,000
35	35,000
40	40,000

HC-204 TENSION TEST

The tension test shall be considered the primary test for qualification under this Article. The results of the tension or transverse tests shall determine compliance for the various classes given in HC-203. (See HC-212, Retests.)

HC-205 TEST BARS

Test bars shall be cast separately from the castings (see HC-207). The sizes of cast test bars shall be as determined in HC-206. Tension specimens shall be machined from those castings to the dimensions shown in Fig. HC-205.1. Tension test specimens "cast to size" shall not be used. The test bar castings shown in Fig. HC-206.1 may be used for optional transverse tests, when that test is specified.

HC-206 SELECTION OF TEST BAR SIZE

The dimensions of the test bars as shown in Fig. HC-206.1 shall be determined by the thickness of the controlling section of the casting as follows (the body or shell of the casting shall be the controlling section):

Thickness of Controlling Section of Casting, in.	Test Bar
0.5 and under	A
0.51 to 1.00	B
1.00 and over	C

RS-002954
1/17/02
NUECES

ARTICLE 1
GENERAL

HLW-100 SCOPE

(a) The rules in Part HLW are applicable to water heaters providing corrosion resistance for supplying potable hot water for commercial purposes at pressures not exceeding 160 psi and temperatures not in excess of 210°F. Part HLW is not intended to apply to hot water heating boilers.

(b) Linings for lined water heaters are limited to porcelain enameled (glass lined), galvanizing, cement, copper, fluorocarbon polymer linings, and amine or polyamine epoxy linings (see HLW-200).

(1) Glass-lined water heaters are defined as those with fired glass internal coatings which are hot water resistant.

(2) Galvanized water heaters are defined as those that are hot zinc dipped after the assembly has been welded.

(3) Cement-lined water heaters are those that are lined with a low-soluble, hydraulic, cement-lining material.

(4) Copper-lined water heaters are defined as those that are completely lined with copper.

(5) Fluorocarbon polymer-lined water heaters are defined as those that are lined with a thermosetting fluorocarbon polymer combined with other stabilizing ingredients and applied after all fabrication has been completed.

(6) Amine or polyamine epoxy-lined water heaters are defined as those that are lined with amine or polyamine epoxy of an analysis for use in potable hot water service.

(c) The materials used in the construction of unlined corrosion resistant water heaters are limited to those listed in Table HLW-301.

(d) Tanks built under the rules of Part HLW may be used for storage of potable water. Article 7 need not apply.

(e) Water heaters and tanks built under the rules of Part HLW may be provided with cathodic protection.

(f) Water heaters used for deionized water fabricated of stainless steel listed in Table HLW-301 may be built to Part HLW provided:

(1) all welding meets the requirements of Section IX;

(2) the maximum thickness shall be ½ in.

HLW-101 SERVICE RESTRICTION AND EXCEPTION

The rules of Part HLW are restricted to potable water heaters and water storage tanks for operation at pressures not exceeding 160 psi and water temperatures not in excess of 210°F. Based on the Committee's consideration, water heaters are exempted when none of the following limitations is exceeded:

(a) heat input of 200,000 Btu/hr;

(b) water temperature of 210°F;

(c) nominal water-containing capacity of 120 gal, except that they shall be equipped with safety devices in accordance with the requirements of HLW-800.

HLW-102 PERMISSIBLE STAMPING

Any water heater or storage tank that meets all of the requirements of Part HLW, including those for inspection, may be stamped with the Code HLW Symbol even though exempted from such stamping.

RS-002955
1/17/02
NUECES

ARTICLE 2
MATERIAL REQUIREMENTS

HLW-200 LINING

(a) Glass Lined. Glass lining shall be of an analysis intended for use in hot water service and the minimum average thickness shall be 0.005 in. The walls, ends, and other parts that are of steel and are glass lined shall be of a quality that is suitable for glass lining by the manufacturer's glass lining process. Glass lining may be applied to parts before assembly. The surfaces of the water heater vessel that are exposed to hot water shall have a coating with a minimum number of discontinuities, and the discontinuities shall average not more than $\frac{1}{8}$ sq in./sq ft of internal surface excluding edges and fittings. Thinning at corners may not extend over $\frac{1}{4}$ in. from the edge.

(b) Galvanized. The galvanized coating shall be based upon at least 1 oz of zinc/sq ft of surface based upon mathematical calculations corresponding to a coating thickness of 0.0017 in. The weight of the zinc coating shall be determined by weighing the water heater before galvanizing and again after the coatingis applied.

The zinc used for coating shall conform to ASTM B 6, Specification for Zinc (Slab Zinc) and shall be at least equal to the grade designated as "Prime Western." The aluminum content of the bath during actual galvanizing operations shall not exceed 0.01%. The galvanizer shall not damage the material by overpickling or by the use of excessively high temperature in pickling or galvanizing.

(c) Cement Lined. For cement-lined water heaters, the cement shall be applied to provide a minimum thickness of $\frac{3}{16}$ in. The lining shall be properly cured, adhere firmly to, and completely cover the interior of the vessel. The joints at the top of the water heater shall be sealed to prevent corrosion in back of the lining. The water absorption of the lining material shall not be more than 17% of the dry weight of the test specimen. The calcium oxide content shall not exceed 35%. The silicon content shall not be less than 25%.

(d) Copper-Lined. The material used for lining may be any copper of weldable or brazeable quality with a minimum thickness of 0.005 in. Lining attachments to steel backing by welding or brazing shall be in accordance with Section IX.

(e) Fluorocarbon Polymer-Lined. Fluorocarbon polymer linings shall be of an analysis intended for use in potable hot water service, and the minimum thickness shall be 0.003 in. The lining shall be cured at a temperature and for a length of time suitable to assure continuity of lining and elimination of solvents. The water absorption rate of the cured lining shall be less than 2% by the method specified in ASTM D 570 shown in Appendix I. Surfaces to be fluorocarbon polymer-lined must be cleaned to remove all scale, oxidation, oil, etc., prior to application of the lining. Interior surfaces may be coated with electroless nickel prior to lining. Flue tubes may be covered with a minimum thickness of 0.006 in. of sheet copper prior to the application of the fluorocarbon polymer lining.

(f) Amine or Polyamine Epoxy-Lined

(1) Amine or polyamine epoxy linings shall be of an analysis intended for use in potable hot water service, and the minimum thickness shall be 0.003 in. The lining shall be cured at a temperature and for a length of time suitable to assure continuity of lining and elimination of solvents. The water absorption rate of the cured lining shall be less than 2% by the method specified in ASTM D 570 shown in Appendix I. Surfaces to be epoxy lined must be cleaned to remove all scale, oxidation, oil, etc., prior to application of the lining.

(2) The use of amine or polyamine epoxy linings shall be limited to electric water heaters with immersion type elements, storage tanks, and those surfaces of fired water heaters that are not directly heated by the products of combustion.

HLW-201 PRIMARY PRESSURE PARTS MATERIAL

(a) The materials used for shells, heads, flues, headers, or tubes shall be limited to those listed in Tables

RS-002966
1/17/02
NUECES

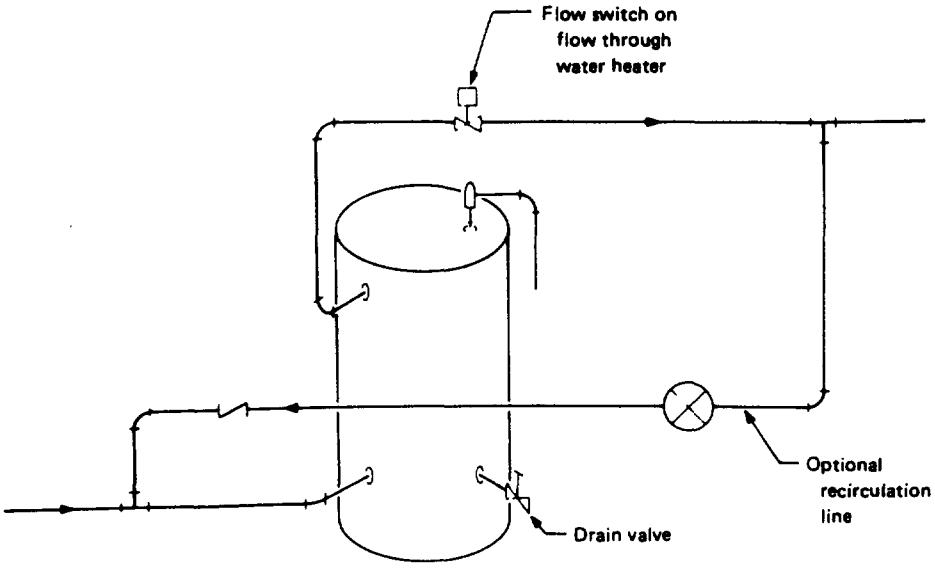

GENERAL NOTE: Thermometer requirements are in HLW-820.

FIG. HLW-809.2 A TYPICAL ACCEPTABLE PIPING INSTALLATION FOR FLOW THROUGH WATER HEATER WITH PROVISIONS FOR PIPING EXPANSION

joints when water heaters are installed in batteries, so that there will be no undue strain transmitted to the water heaters. See Figs. HLW-809.1 and HLW-809.2 for typical schematic arrangements of piping incorporating strain absorbing joints.

HLW-810 BOTTOM DRAIN VALVE

(a) Each water heater shall have a bottom drain pipe connection fitted with a valve or cock connected with the lowest water space practicable. The minimum size bottom drain valve shall be $\frac{3}{4}$ in.

(b) Any discharge piping connected to the bottom drain connection shall be full size to the point of discharge.

HLW-820 THERMOMETER

Each installed water heater shall have a thermometer so located and connected that it shall be easily readable. The thermometer shall be so located that it shall at all times indicate the temperature in degrees Fahrenheit of the water in the hot water heater at or near the outlet.

RS-002967
1/17/02
NUECES

Appendix I Specification for Test Method for Water Absorption of Plastics 212

Appendix K Guide to Information Appearing on Certificate of Authorization..... 216

RS-002958
1/17/02
NUECES

TABLE 2-100
CODES, STANDARDS, AND SPECIFICATIONS REFERENCED IN TEXT

American National Standards

B16.1-1989	Cast Iron Pipe Flanges and Flanged Fittings
B16.5-1981	Steel Pipe Flanges and Flanged Fittings
B16.9-1986	Factory-Made Wrought Steel Buttwelding Fittings
B16.11-1980	Forged Steel Fittings, Socket Welding and Threaded
B16.15-1985	Cast Bronze Threaded Fittings
B16.24-1979	Bronze Pipe Flanges and Flanged Fittings
B16.28-1986	Wrought Steel Buttwelding Short Radius Elbows and Returns
B16.42-1987	Ductile Iron Pipe Flanges and Flanged Fittings

ASME Performance Test Code

PTC-25.3-1988	Safety and Relief Valves

Underwriters Laboratory Standards For Safety

UL 969-1982	Marking and Labeling Systems

GENERAL NOTE: The issue date, shown immediately following the hyphen after the number of the standard, is the effective date of issue (edition) of the standard.

RS-002959
1/17/02
NUECES

APPENDIX 3 — MANDATORY ADHESIVE ATTACHMENT OF NAMEPLATES TO CASING

3-100 SCOPE

The rules in Appendix 3 cover minimum requirements for nameplates and for the use of adhesive systems for the attachment of nameplates to casing, limited to:

(a) the use of pressure-sensitive acrylic adhesives preapplied by the nameplate manufacturer and protected with a moisture stable release liner;

(b) use of the preapplied adhesive within 2 years of its application;

(c) use of an application procedure qualified as outlined in 3-101.

3-101 NAMEPLATE APPLICATION PROCEDURE QUALIFICATION

(a) Each nameplate manufacturer's construction shall be qualified in accordance with ANSI/UL 969, Marking and Labeling Systems, for a surface temperature rating greater than that achieved on the surface of the casing in the area where the nameplate is applied during operation. The exposure conditions shall be for high humidity or occasional exposure to water. In addition if the boiler or water heater is designed and marked for outdoor installation, indoor-outdoor qualification shall be obtained with a cold box temperature of –40°F.

(b) Each lot or package of nameplates shall be marked with the adhesive application date.

(c) The manufacturer's quality control system shall define that written procedures, acceptable to the Authorized Inspector (or ASME Designee for cast iron boilers), for the application of adhesive backed nameplates shall be prepared and qualified. The application procedure qualification shall include the following essential variables:

(1) each nameplate manufacturer's material and construction, including thickness range, UL File No., and rated substrate temperature(s) and finish;

(2) the maximum temperature achieved on the surface of the casing in the area at which the nameplate is applied;

(3) cleaning requirements for the casing surface;

(4) application temperature range and pressure technique.

RS-002960
1/17/02
NUECES

$A_3 = \text{leg}^2$

$= 0.337 \times 0.337 \quad = 0.114$ sq in.

A_T = total reinforcement $= 1.214$ sq in.

$A_T > A$ (opening is reinforced)

(g) Load to Be Carried by the Welds (See HG-327.2)

$$W = [(d_{on} \times t_r) - (2d_{in} - d_{on})(t - t_r)]\ S(\text{shell})$$

$$= [(4.50 \times 0.264) - (2.0 \times 3.826 - 4.50)$$

$$\times (0.437 - 0.264)]\ 11{,}000$$

$$= 7035 \text{ lb}$$

(h) Unit Stresses (See HW-730.2)

Shear in fillet weld $= 0.49 \times 11{,}000$

$= 5390$ psi $= S_s$

Tension in groove weld $= 0.74 \times 11{,}000$

$= 8140$ psi $= S_t$

Shear in nozzle wall $= 0.70 \times 11{,}000$

$= 7700$ psi $= S_n$

(i) Strength of Connection Elements (See HW-730.1)

(1) Fillet Weld in Shear

$$\frac{\pi}{2} \times d_{on} \times \text{weld leg} \times S_s = 1.57 \times 4.5 \times 0.337 \times 5390$$

$$= 12{,}833 \text{ lb}$$

(2) Groove Weld in Tension

$$\frac{\pi}{2} \times d_{on} \times t \times S_t = 1.57 \times 4.5 \times 0.437 \times 8140$$

$$= 25{,}100 \text{ lb}$$

(3) Nozzle Wall Shear

$$\frac{\pi}{2} \times \text{mean nozzle diam.} \times t_n \times S_n$$

$$= 1.571 \times 4.163 \times 0.337 \times 7700$$

$$= 16{,}971 \text{ lb}$$

Possible paths of failure are:

(a) through (1) and (2) above with a strength of 37,933 lb;

(b) through (3) above with a strength of 29,804 lb.

Both paths are stronger than the required strength of 7035 lb.

RS-002961
1/17/02
NUECES

APPENDIX E
DEFINITIONS

E-100 TERMS RELATING TO DESIGN

Action, Popping, or Pop — The action of a safety or safety relief valve when it opens under steam pressure. The disk of the valve is designed so that the force of the steam lifting the disk is increased when the disk is lifted slightly off its seat. The increase in force accelerates the rising action of the disk to the wide open position at or near the opening pressure.

Blowdown — The difference between the opening and closing pressures of a safety or relief valve.

Boiler, Automatically Fired — A boiler equipped with a means of introducing heat or of causing fuel, whether solid, liquid, gaseous, or electric, to be introduced into the boiler or boiler furnace, the means being so regulated by the rate of flow, the generating pressure, or temperature of the boiler fluid or of a vessel or space being heated as to maintain a determined, desired condition within a designated tolerance.

Boiler, Electric, Resistance Heating Element Type — Electric boilers of the resistance heating element type are either:

(a) of a design where the electric resistance element is directly attached to the external surface of the pressure vessel; or

(b) an immersed type where the electric resistance element is inserted through an opening in the pressure vessel so that the element is in direct contact with the water.

Boiler, Horizontal-Return Tubular — A firetube boiler consisting of a cylindrical shell, with tubes inside the shell attached to both end closures. The products of combustion pass under the bottom half of the shell and return through the tubes.

Boiler, Hot Water Heating — A boiler designed to heat water for circulation through an external space heating system.

Boiler, Hot Water Supply — A boiler used to heat water for purposes other than space heating.

Boiler, Modular — A steam or hot water heating assembly consisting of a grouping of individual boilers called modules, intended to be installed as a unit. Modules may be under one jacket or may be individually jacketed.

Boiler, Steam Heating — A boiler designed to convert water into steam which is supplied to an external space heating system.

Bottom Blowoff Valve — A valve or cock located in the bottom blowoff connection of a boiler which, when opened, permits free passage of scale and sediment during the blowoff operation.

Column, Fluid Relief — That piping, connected to the top of a hot water heating boiler, which is provided for the thermal expansion of the water. It will connect to either an open or a closed expansion tank.

Drain Valve — A valve or cock located in a boiler connection which, when opened, will drain the lowest water space practicable.

Electric Boiler, Submerged Electrode Type — A submerged electrode type electric boiler incorporates a design wherein two or more metallic electrodes are directly suspended in the boiler water. When a source of electric power is connected to the electrodes, current will flow between the electrodes and through the water, thus raising the temperature of the water to produce steam.

Feedwater — Water introduced into a boiler during operation. Includes makeup and return condensate or return water.

Flue — Passage through which gases pass from the combustion chamber or furnace to the venting system.

Furnace — That part of a boiler in which combustion of fuel takes place or in which primary furnace gases are conveyed.

Gases, Primary Furnace — Gases in a zone where the anticipated temperature of the gas exceeds 850°F.

Joints, Swing — Threaded, flanged, welded, or brazed pipe and fittings so arranged that the piping system which they comprise, when connected to a boiler, can

RS-002962
1/17/02
NUECES

expand and contract without imposing excessive force on it.

Makeup Water — Water introduced into the boiler to replace that lost or removed from the system.

Pressure, Accumulation Test — That steam pressure at which the capacity of a safety, safety relief, or a relief valve is determined. It is 33⅓% over the steam safety valve set pressure and 10% over the safety relief valve set pressure.

Pressure, Design — The pressure used in the design of a boiler for the purpose of calculating the minimum permissible thickness or physical characteristics of the different parts of the boiler.

Pressure, Maximum Allowable Working — The maximum gage pressure permissible in a completed boiler. The MAWP of the completed boiler shall be less than or equal to the lowest design pressure determined for any of its parts. This pressure is based upon either proof tests or calculations for every pressure part of the boiler using nominal thickness exclusive of allowances for corrosion and thickness required for loadings other than pressure. It is the basis for the pressure setting of the pressure relieving devices protecting the boiler.

Pressure, Operating — The pressure of a boiler at which it normally operates. It shall not exceed the maximum allowable working pressure and it is usually kept at a suitable level below the setting of the pressure relieving devices to prevent their frequent opening.

Rated, Officially — A safety, safety relief, or relief valve for use on a heating boiler which has been capacity rated in accordance with HG-402.

Stress, Maximum Allowable — The maximum unit stress permitted in a given material used under these rules.

Siphon — A bent pipe or tube, between a steam pressure gage and the steam connection on a boiler, so fabricated that it contains a water seal which prevents steam entering the Bourdon tube of the gage.

Surface, Heating, Square Feet of — That area of the boiler surface exposed to the products of combustion. In computing the heating surface for the purpose of determining the safety or relief valve requirements, only the tubes, fireboxes, shells, tubesheets, and the projected area of the headers need be considered, except that for vertical firetube boilers only that portion of the tube surface up to the middle point of the gage glass is to be computed.

Thickness, Required — The minimum thickness determined by the formulas in this Code.

Tube, Fire — A hollow cylinder used for the conveyance of gases, flame, or hot air.

Tube, Water — A hollow cylinder used for the conveyance of liquids.

Valve, Pressure–Temperature Relief — An automatic relieving device actuated by the static pressure upstream of the valve (which opens further with increase in the pressure over the opening pressure) or by the temperature of the fluid. It is used primarily for liquid service.

Valve, Safety — An automatic pressure relieving device actuated by the static pressure upstream of the valve and characterized by full-opening pop action. It is used for gas or vapor service.

Valve, Safety, Lift of — The movement of the disk off the seat of a safety, safety relief, or relief valve when the valve is opened. It normally refers to the amount of movement of the disk off the seat when the valve is discharging at rated pressure.

Valve, Safety Relief — An automatic pressure relieving device actuated by the pressure upstream of the valve and characterized by opening pop action with further increase in lift with an increase in pressure over popping pressure.

Water Heater — A vessel in which potable water is heated by the combustion of fuel, by electricity, or by any other source, and withdrawn for external use.

Water Heater, Lined — A water heater with a corrosion resistant lining designed to heat potable water.

Water Heater, Unlined — A water heater made from corrosion resistant materials designed to heat potable water.

Wet-Bottom Boiler — Any type of boiler which has a stayed or self-supporting, partially or fully water-cooled, shell or furnace bottom.

E-101 TERMS RELATING TO WELDING

Arc Stud Welding — An arc welding process wherein coalescence is produced by heating with an arc drawn between a metal stud, or similar part, until the surfaces to be joined are properly heated, when they are brought together under pressure. Partial shielding may be obtained by the use of a ceramic ferrule surrounding the stud. Shielding gas or flux may or may not be used.

Arc Welding — A group of welding processes wherein coalescence is produced by heating with an electric arc or arcs, with or without the application of pressure and with or without the use of filler metal.

Atomic Hydrogen Welding — An arc welding process wherein coalescence is produced by heating with an electric arc maintained between two metal electrodes in an atmosphere of hydrogen. Shielding is obtained

RS-002963
1/17/02
NUECES

from the hydrogen. Pressure may or may not be used and filler metal may or may not be used.

Automatic Welding — Welding with equipment which performs the entire welding operation without constant observation and adjustment of the controls by an operator. The equipment may or may not perform the loading and unloading of the work.

Backing — Material (metal, weld metal, asbestos, carbon, granular flux, etc.) backing up the joint during welding to facilitate obtaining a sound weld at the root.

Base Metal — The metal to be welded or cut.

Brazing — A group of metal-joining processes wherein coalescence is produced by heating to suitable temperatures above 800°F and by using a nonferrous filler metal, having a melting point below that of the base metals. The filler metal is distributed between the closely fitted surfaces of the joint by capillary attraction.

Butt Joint — A joint between two members lying approximately in the same plane.

Corner Joint — A joint between two members located approximately at right angles to each other in the form of an L.

Double-Welded Butt Joint — A butt joint welded from both sides.

Double-Welded Lap Joint — A lap joint in which the overlapped edges of the members to be joined are welded along the edges of both members.

Edge Joint — A joint between the edges of two or more parallel or nearly parallel members.

Filler Metal — Metal to be added in making a weld.

Fillet Weld — A weld of approximately triangular cross section joining two surfaces approximately at right angles to each other in a lap joint, tee joint, or corner joint.

Flux Cored Arc Welding (FCAW) — A gas metal arc welding process which produces coalescence of metals by heating them with an arc between a continuous filler metal (consumable) electrode and the work. Shielding is provided by a flux contained within the tubular electrode. Additional shielding may or may not be obtained from an externally supplied gas or gas mixture.

Flux Cored Arc Welding-Electrogas (FCAW-EG) — A variation of the flux cored arc welding process in which molding shoes are used to confine the molten weld metal for vertical position welding. Additional shielding may or may not be obtained from an externally supplied gas or gas mixture.

Flux Cored Electrode — A composite filler metal electrode consisting of a metal tube or other hollow configuration containing ingredients to provide such functions as shielding atmosphere, deoxidation, arc stabilization, and slag formation. Alloying materials may be included in the core. External shielding may or may not be used.

Full Fillet Weld — A fillet weld whose size is equal to the thickness of the thinner member joined.

Gas Metal Arc Welding-Electrogas (GMAW-EG) — A variation of the gas metal arc welding process using molding shoes to confine the molten weld metal for vertical position welding.

Gas Tungsten-Arc Welding — An arc welding process wherein coalescence is produced by heating with an electric arc between a single tungsten (nonconsumable) electrode and the work. Shielding is obtained from a gas or gas mixture (which may contain an inert gas). Pressure may or may not be used. Filler metal may or may not be used. (This process has sometimes been called TIG Welding.)

Gas Welding — A group of welding processes wherein coalescence is produced by heating with a gas flame or flames with or without the application of pressure, and with or without the use of filler metal.

Joint Efficiency — The efficiency of a welded joint is expressed as a numerical (decimal) quantity and is used in the design of a joint as a multiplier of the appropriate allowable stress taken from Tables HF-300.1 and HF-300.2.

Joint Penetration — The minimum depth a groove weld extends from its face into a joint, exclusive of reinforcement.

Lap Joint — A joint between two overlapping members.

Machine Welding — Welding with equipment which performs the welding operation under the observation and control of an operator. The equipment may or may not perform the loading and unloading of the work.

Manual Welding — Welding wherein the entire welding operation is performed and controlled by hand.

Oxyacetylene Welding — A gas welding process wherein coalescence is produced by heating with a gas flame or flames obtained from the combustion of acetylene with oxygen, with or without the application of pressure and with or without the use of filler metal.

Oxygen Cutting — A group of cutting processes wherein the severing of metals is effected by means of the chemical reaction of oxygen with the base metal at elevated temperatures. In the case of oxidation resistant metals, the reaction is facilitated by use of a flux or metal powder.

Oxyhydrogen Welding — A gas welding process wherein coalescence is produced by heating with a gas flame or flames obtained from the combustion of hydrogen with oxygen, without the application of pressure and with or without the use of filler metal.

RS-002964
1/17/02
NUECES

NOTE 5—When the weight on reconditioning the specimen after immersion in water exceeds the conditioned weight prior to immersion, report "none" under 9.1.6.

9.1.7 The percentage of water absorbed, which is the sum of the values in 9.1.5 and 9.1.6, and

9.1.8 Any observations as to warping, cracking, or change in appearance of the specimens.

10. Precision and Bias

10.1 *Precision*—An interlaboratory test program was carried out using the procedure outlined in 7.1, involving three laboratories and three materials. Analysis of this data yields the following coefficients of variation (average of three replicates).

	Within Laboratories	Between Laboratories
Average absorption above 1% (2 materials)	2.33%	4.89%
Average absorption below 0.2% (1 material)	9.01%	16.63%

10.2 *Bias*—No justifiable statement on the bias of this test method can be made, since the true value of the property cannot be established by an accepted referee method.

RS-002965
1/17/02
NUECES

APPENDIX K
GUIDE TO INFORMATION APPEARING ON CERTIFICATE OF AUTHORIZATION

ITEM	DESCRIPTION
①	a. The name of the Manufacturer or Assembler; this description could include "doing business as" (DBA) or an abbreviation of the name. b. The full street address, city, state or province, country, and zip code.
②	This section describes the scope and limitations if any, on use of the Code symbol stamps, as illustrated below. Field site Certificate of Authorization applies to items which are fabricated or assembled at a field site and is not intended to apply to items at any shop location. **H Code Symbol Stamp** 1. Heating boilers, except cast iron, at the above location only. 2. Heating boilers, except cast iron, at the above location only. (This authorization includes multiple duplication heating boilers.) 3. Heating boilers, except cast iron, at the above location. (This authorization does not cover welding or brazing.) 4. Heating boilers, except cast iron, at the above location and field sites controlled by that location. 5. Heating boilers, cast iron only, at the above location only. **HLW Code Symbol Stamp** 1. Potable water heaters at the above location only. 2. Potable water heaters at the above location only. (This authorization includes multiple duplicate lined potable water heaters.) **HV Code Symbol Stamp** 1. Manufacturer of heating boiler safety valves at the above location only. 2. Manufacturer of heating boiler safety valves at the above location only. (This authorization does not cover welding or brazing.) 3. Assembler of heating boiler safety valves at the above location. 4. Assembler of heating boiler safety valves at the above location. (This authorization does not cover welding or brazing.) 5. Manufacturer and Assembler of heating boiler safety valves at the above location only. 6. Manufacturer and Assembler of heating boiler safety valves at the above location only. (This authorization does not cover welding or brazing.)
③	The date authorization was granted by the Society to use the appropriate Code Symbol Stamp.
④	The date authorization to use the appropriate Code Symbol Stamp will expire.

RS-002966
1/17/02
NUECES

GUIDE TO MANUFACTURERS' DATA REPORT FORMS

Introduction 221

Instructions for Preparation of Section IV Manufacturers' Data Report Forms 222

Form H-2	Manufacturers' Data Report for All Types of Boilers Except Watertube and Those Made of Cast Iron.....	225
Form H-3	Manufacturers' Data Report for Watertube Boilers.....	227
Form H-4	Manufacturers' Partial Data Report	229
Form H-5	Manufacturers' Master Data Report for Boilers Constructed From Cast Iron.....	231
Form HLW-6	Manufacturers' Data Report for Water Heaters or Storage Tanks.....	233
Form HLW-7	Manufacturers' Partial Data Report for Water Heaters and Storage Tanks.....	235
Form HLW-8	Manufacturers' Master Data Proof Test Report for Water Heaters or Storage Tanks	237

RS-002967
1/17/02
NUECES

INTRODUCTION

The following pages are a guide for completing the Manufacturer's Data Report Forms. Forms and guides are keyed in the following manner:

(1) Circled numbers refer to the guide for required subject material.

1. Numbers without circles appearing in the guide material identify specific lines on the Manufacturer's Data Report Forms.

Forms appearing in this Section may be obtained from the Order Dept., ASME, 22 Law Drive, Box 2300, Fairfield, N.J. 07007-2300.

RS-002968
1/17/02
NUECES

INSTRUCTIONS FOR THE PREPARATION OF SECTION IV MANUFACTURERS' DATA REPORT FORMS

Applies to Form							Note	
H-2	H-3	H-4	H-5	HLW-6	HLW-7	HLW-8	No.	Instruction:
X	X	X	X	X	X	X	(1)	Name and address of manufacturer (i.e., maker of all components not covered by Partial Data Reports.)
X	X	X	...	X	X	...	(2)	Name and address of purchaser and/or owner.
X	X	X	...	X	...	...	(3)	Name and address of location where unit is to be installed. If not known, so indicate (e.g., "not known—built for stock.")
X	X	...	X	...	...	X	(4)	Show type or model of unit documented by this data report.
X	X	X	...	X	X	...	(5)	Identification of unit by applicable numbers. If intended for installation in Canada, indicate the Canadian design registration number and drawing number.
X	X	X	...	X	X	...	(6)	Year in which fabrication was completed in shop.
X	X	X	...	X	X	...	(7)	Date (year) of Section IV edition under which boiler or part was constructed.
X	X	X	...	X	X	...	(8)	Issue date of most recent addenda to Section IV under which boiler or part was constructed (e.g., "Summer 1982.")
X	X	X	...	X	...	...	(9)	Code Case number, if applicable.
X	...	...	...	...	...	...	(10)	Show quantity and inside dimensions in inches. If more than two shells or drums are used, enter data in line 14.
X	X	X	...	X	X	X	(11)	Show the complete ASME material specification number and grade as listed in the appropriate stress allowance table in Section IV (e.g., "SA-285-B") Exception: A specification number for a material not identical to an ASME Specification may be shown only if such material has been approved for Section IV construction by an ASME interpretation case ruling and provided the applicable case number is also shown.
X	...	...	...	X	X	...	(12)	Indicate type of joint(s).
X	...	...	...	X	X	...	(13)	Show joint efficiency for welded joints.
X	...	...	...	...	...	...	(14)	Show number of furnaces in boiler.
X	...	...	...	...	...	...	(15)	For cylindrical furnaces of the Adamson, ring-reinforced, and combined types, show total length only.
X	...	...	...	...	...	...	(16)	For stayed (firebox) type furnace, complete line 12 also.
X	...	...	...	...	...	...	(17)	If threaded, show diameter at root of thread.
X	...	...	...	...	...	...	(18)	Minimum cross-sectional area after deducting for telltale hole.
X	...	...	...	...	...	...	(19)	Maximum allowable working pressure for the stayed area calculated according to the rules contained in Part HG of Section IV.
X	...	...	...	...	...	...	(20)	Type of stay or brace (e.g., diagonal, gusset, girder, through, etc.)
X	...	...	...	...	...	...	(21)	Minimum cross-sectional area of the stay or brace multiplied by the number of stays or braces supporting the area under consideration.
X	...	...	...	...	...	...	(22)	See applicable paragraphs and figures in Part HG of Section IV.
X	...	...	...	...	...	...	(23)	List parts not covered elsewhere on the data report. If insufficient space, attach a supplementary sheet.
X	...	...	...	...	...	...	(24)	Tabulate data for parts listed on line 14.
X	X	X	...	X	...	...	(25)	Show data for main and auxiliary inlets and outlets, nozzles, inspection openings, safety valve openings, drains and blowoffs. This does not apply to small openings for water column, controls, vents, etc.
X	...	...	...	...	...	...	(26)	Design pressure established in accordance with HG-300 of Section IV.
X	...	...	...	...	...	...	(27)	Show Section IV paragraph which applies to the weakest part of the unit as established by calculation or deformation test.
X	...	...	...	...	...	...	(28)	Boiler heating surface calculated in accordance with HG-403 of Section IV or kW.
X	...	...	...	...	...	...	(29)	Hydrostatic pressure applied in accordance with HG-510 and witnessed by the Authorized Inspector.
X	X	...	...	X	X	...	(30)	To be completed when one or more components comprising the unit are furnished by others and certified by the applicable Partial Data Report(s).
X	X	X	X	X	X	X	(31)	The manufacturer's ASME Certificate of Authorization number and date of expiration of said authorization.
X	X	X	...	X	X	X	(32)	This line is to be completed and signed by an authorized representative of the manufacturer.

RS-002969
1/17/02
NUECES

INSTRUCTIONS FOR THE PREPARATION OF SECTION IV MANUFACTURERS' DATA REPORT FORMS (CONT'D)

Applies to Form							Note	
H-2	H-3	H-4	H-5	HLW-6	HLW-7	HLW-8	No.	Instruction:
X	X	X	...	X	X	X	(33)	This certificate to be completed by the Authorized Inspection Agency representative who performs the in-shop inspection.
X	X	X	...	X	X	X	(34)	To determine what goes in this space, you should be guided by the following: **National Board stamped boilers and pressure vessels** After "and state or province" in the certification blocks — if the Inspector has a valid Certificate of Competency for the state or province where the manufacturer's shop is located, insert the name of that state or province. If the manufacturer is located in a non-Code jurisdiction, insert the name of the state or province where the inspector took his original examination to obtain his National Board Commission provided that Certificate of Competency is still valid. If not, show the name of the state or province where he has a valid Certificate of Competency authorizing him to make the shop inspection. **Boilers and pressure vessels stamped only ASME** Follow the above procedure. However, in this case do not list any National Board Commission number after the inspector's signature at the bottom of the block.
X	X	...	...	X	...	...	(35)	Indicate the data items covered on the applicable form by line numbers.
X	X	...	...	X	...	...	(36)	Indicate by line numbers those items furnished by others and for which the applicable Partial Data Reports have been examined.
X	X	X	...	X	X	X	(37)	The inspector's National Board Commission number and the state or province Certificate of Competency number must be shown when the boiler is stamped National Board. The inspector shall use his jurisdictional Certificate of Competency and National Board Commission number on Partial Data Report Forms. If the boiler or vessel is not to be registered with the National Board, the inspector shall use only his state or province Certificate of Competency number.
X	X	...	...	...	...	...	(38)	The assembler's ASME Certificate of Authorization number and date of expiration of said authorization.
X	X	...	...	...	...	...	(39)	This line to be completed, when applicable, and signed by an authorized representative of the organization responsible for field assembly of the boiler.
X	X	...	...	...	...	...	(40)	This certificate to be completed by the Authorized Inspection Agency representative who performs the field assembly inspection.
X	X	...	...	...	...	...	(41)	Indicate by line numbers from the applicable form those items inspected in the field that were not inspected in the shop.
X	X	X	...	X	X	X	(42)	Nominal thickness of plate.
	X	X	...	...	...	...	(43)	Minimum thickness after forming.
	X	X	...	...	...	...	(44)	Radius on concave side of dish.
	X	X	...	...	...	...	(45)	Shop hydrostatic test, if any, applied to individual part prior to test applied to the assembled boiler. (See lines 33 and 35.)
	X	X	...	...	...	...	(46)	This line for headers not covered as items 7 through 10. It is intended primarily for sectional headers on straight tube watertube boilers.
	X	X	...	X	X	...	(47)	Indicate shape as flat, dished, ellipsoidal or hemispherical.
	X	X	...	...	...	...	(48)	Use inside dimensions for size.
	X	X	...	...	...	...	(49)	Indicate shape as square, round, etc.
	X	X	...	...	...	...	(50)	Outside diameter.
	X	...	...	...	...	...	(51)	Minimum thickness of tubes.
	X	X	...	...	...	...	(52)	Size is nominal pipe size.
	X	X	...	...	...	...	(53)	Describe type as flanged, welding neck, etc.
		X	...	...	X	...	(54)	Show name of part (e.g., steam drum, waterwall header, etc.)
		X	...	...	X	...	(55)	Show data line number on applicable form for the named part.
	X	X	...	X	X	...	(56)	Any additional information to clarify the report should be entered here.
		X	...	...	...	...	(57)	List each individual section which makes up boiler assembly. Show pattern and/or part number for each section. Show drawing number for each section. Show metal thickness for each section as indicated on the drawings. List each section of the complete boiler.
		X	...	...	...	...	(58)	Show bursting pressure of each section of boiler in pounds per square inch. Show thickness in inches measured at the break or fracture of each section. Indicate weight in pounds of each section.

RS-002970
1/17/02
NUECES

INSTRUCTIONS FOR THE PREPARATION OF SECTION IV MANUFACTURERS' DATA REPORT FORMS (CONT'D)

Applies to Form							Note	
H-2	H-3	H-4	H-5	HLW-6	HLW-7	HLW-8	No.	Instruction:
...	...	...	X	...	...	...	(58)	Indicate minimum specified tensile strength in pounds per square inch for the class of iron as set forth in Table HC-300.
...	...	...	X	...	...	...	(60)	Indicate sections of boiler which represent specimen test bars. Show results of each specimen tested (tensile strength) in pounds per square inch.
...	...	...	X	...	...	...	(61)	Show maximum allowable working pressure in pounds per square inch as determined by Formula HC-402 and by values allowed by Formula HC-402.
...	...	...	X	...	...	X	(62)	The individual designated to conduct tests, the designated manufacturer's representative who witnesses test and date or dates on which destruction tests were conducted.
...	...	...	X	...	...	...	(63)	Designated responsible engineering head certifying the tests and date.
...	...	...	...	X	...	...	(64)	Show quantity and dimensions.
...	...	...	...	X	X	...	(65)	Type of lining, if applicable.
...	...	...	...	X	X	X	(66)	Maximum allowable working pressure established in accordance with HLW-300 or HLW-500 of Section IV.
...	...	...	...	X	X	...	(67)	Indicate maximum allowable input, ___Btu/hr, or kW. For tanks used for storage, indicate "storage only."
...	...	...	...	X	X	...	(68)	Maximum temperature in accordance with HLW-300 of Section IV.
...	...	...	...	X	X	...	(69)	Hydrostatic pressure applied in accordance with HLW-505 of Section IV and witnessed by the Authorized Inspector.
...	...	...	...	...	...	X	(70)	Part of vessel yielding first should be indicated.
...	...	...	...	...	...	X	(71)	Pressure at which yielding occurs as evidenced by flaking of the brittle coating or by appearance of strain lines.
...	...	...	...	...	...	X	(72)	Show yield strength in psi for each of the three specimens and average of the three.
...	...	X	...	...	X	...	(73)	This ID number is a unique identifying number for this form which may be assigned by the Certificate Holder, if desired.

RS-002971
1/17/02
NUECES

FORM H-2 MANUFACTURERS' DATA REPORT FOR ALL TYPES OF BOILERS EXCEPT WATERTUBE AND THOSE MADE OF CAST IRON

As Required by the Provisions of the ASME Code Rules, Section IV

1. Manufactured and certified by _____ (1) (name and address of manufacturer)

2. Manufactured for _____ (2) (name and address of purchaser)

3. Location of installation _____ (3) (name and address)

4. Unit identification _____ (4) (complete boiler, superheater, waterwall, economizer, etc.) _____ (5) (mfr's. serial no.) _____ (CRN) _____ (drawing no.) _____ (Nat'l. Bd. no.) _____ (6) (year built)

5. The chemical and physical properties of all parts meet the requirements of material specifications of the ASME BOILER AND PRESSURE VESSEL CODE. The design, construction and workmanship conform to ASME Code, Section IV. _____ (7) (year) _____ (8) (addenda (date)) _____ (9) (Code Case no.)

Manufacturers' Partial Data Reports properly identified and signed by Commissioned Inspectors have been furnished for the following items of this report: _____ (30) (54)

(name of part, item number, mfr's. name and identifying stamp)

6. Shells or drums: _____ (10) (no.) _____ (11) (mat'l. spec., gr.) _____ (42) (thickness (in.)) _____ (10) (dia. (I.D.)) _____ (length (overall)) _____ (dia. (I.D.)) _____ (length (overall))

7. Joints: _____ (12) (long. (seamless, welded)) _____ (13) (eff. (as compared to seamless)) _____ (12) (girth (seamless, welded)) _____ (no. of shell courses)

8. Tubesheet: _____ (11) (mat'l. spec., grade) _____ (thickness) Tube holes: _____ (no. & dia.)

9. Tubes: No. _____ (11) (mat'l. spec., grade) _____ (straight or bent) Dia _____ Length _____ (if various, give max. & min.) Gauge _____ (or thickness)

10. Heads: _____ (11) (mat'l. specification no.) _____ (thickness) _____ (flat, dished, ellipsoidal) _____ (radius of dish)

11. Furnace: _____ (11) (mat'l. spec., gr.) _____ (thickness) _____ (14) (no.) _____ (size (O.D. or W x H)) _____ (length (each section)) _____ (15) (total) _____ (16) (type (plain, corrugated, etc.)) Seams: _____ (type (seamless, welded))

12. Staybolts: _____ (17) (no.) _____ (state (dia.)) _____ (11) (mat'l. spec., gr.) _____ (size) _____ (telltale) _____ (18) (net area) _____ (pitch (hor. and vert.)) _____ (19) (MAWP (psi))

13. Stays or braces:

Location	Mat'l Spec	Type	No. & Size	Pitch	Total Net Area	Fig. HG-343 U1	Dist. Tubes to Shell	Area to be Stayed	MAWP psi
(a) F.H. above tubes	(11)	(20)			(21)	(22)			
(a) R.H. above tubes									
(a) F.H. below tubes									
(a) R.H. below tubes									
(a) Through stays									

14. Other parts 1. _____ (23) 2. _____ 3. _____ (brief description — i.e. dome, boiler piping, etc.)

_____ (24) (11)

(mat'l. spec., grade, size, material in excess, MAWP)

15. Nozzles, inspection and safety valve openings. (25)

Purpose (steam, outlet, drain, etc.)	No.	Dia. or Size	Type	How Attached	Mat'l.	Nom. Thickness	Reinforcement Mat'l.	Location
Manholes up to 3" x 4"					NA		NA	
Washout								
Safety					(11)			
Gauge								
Blowoff								
Other								

This form (E00101) may be obtained from the Order Dept., ASME, 22 Law Drive, Box 2300, Fairfield, N.J. 07007-2300.

RS-002972
1/17/02
NUECES

FORM H-2 (Back)

16. Boiler supports: _____ (no.) _____ (type - saddle, lugs, lugs) _____ (attachment (bolted or welded))

17. Design pressure _____ (26) (psi) Based on _____ (27) (Code par. and/or formula) Heating surface _____ (28) (sq. ft. or kW (total)) Shop hydro test _____ (29) (psi (complete boiler))

18. **Remarks:** _____

CERTIFICATE OF SHOP COMPLIANCE

We certify that the statements made in this data report are correct and that all details of design, material, construction, and workmanship of this boiler conform to Section IV of the ASME BOILER AND PRESSURE VESSEL CODE.

"H" Certificate of Authorization no. _____ (31) expires _____, 19_____.

Date _____ (32) Signed _____ (by representative) Name _____ (manufacturer that constructed and certified boiler)

(33) CERTIFICATE OF SHOP INSPECTION

Boiler constructed by _____ at _____.

I, the undersigned, holding a valid commission issued by the National Board of Boiler and Pressure Vessel Inspectors and/or the state or province of _____ (34) and employed by _____ have inspected parts of this boiler referred to as data items _____ (35) and have examined Manufacturers' Partial Data Reports for items _____ (36) and state that, to the best of my knowledge and belief, the manufacturer has constructed this boiler in accordance with the applicable sections of the ASME BOILER AND PRESSURE VESSEL CODE.

By signing this certificate neither the inspector nor his employer makes any warranty, expressed or implied, concerning the boiler described in this Manufacturers' Data Report. Furthermore, neither the inspector nor his employer shall be liable in any manner for any personal injury or property damage or a loss of any kind arising from or connected with this inspection.

Date _____ Signed _____ (Authorized Inspector) Commissions _____ (37) (Nat'l Bd. (incl. endorsements) state, prov. and no.)

CERTIFICATE OF FIELD ASSEMBLY COMPLIANCE

We certify that the field assembly construction of all parts of this boiler conforms with the requirements of SECTION IV of the ASME BOILER AND PRESSURE VESSEL CODE.

"H" Certificate of Authorization no. _____ (38) expires _____, 19_____.

Date _____ (39) Signed _____ (by representative) Name _____ (assembler that certified and constructed field assembly)

(40) CERTIFICATE OF FIELD ASSEMBLY INSPECTION

I, the undersigned, holding a valid commission issued by the National Board of Boiler and Pressure Vessel Inspectors and/or the state or province of _____ (34) and employed by _____ have compared statements in this Manufacturers' Data Report with the described boiler and state that the parts referred to as data items _____ (41), not included in the certificate of shop inspection, have been inspected by me and that to the best of my knowledge and belief the manufacturer and/or the assembler has constructed and assembled this boiler in accordance with the applicable sections of the ASME BOILER AND PRESSURE VESSEL CODE. The described boiler was inspected and subjected to a hydrostatic test of _____ psi.

By signing this certificate neither the inspector nor his employer makes any warranty, expressed or implied, concerning the boiler described in this Manufacturers' Data Report. Furthermore, neither the inspector nor his employer shall be liable in any manner for any personal injury or property damage or a loss of any kind arising from or connected with this inspection.

Date _____ Signed _____ (Authorized Inspector) Commissions _____ (37) (Nat'l Bd. (incl. endorsements) state, prov. and no.)

RS-002873
1/17/02
NUECES

FORM H-3 MANUFACTURERS' DATA REPORT FOR WATERTUBE BOILERS
As Required by the Provisions of the ASME Code Rules, Section IV

1. Manufactured and certified by _____ (1) (name and address of manufacturer)

2. Manufactured for _____ (2) (name and address of purchaser)

3. Location of installation _____ (3) (name and address)

4. Unit identification: _____ (4) (complete boiler, superheater, waterwall, etc.) _____ (5) (mfr's serial no.) _____ (CRN) _____ (drawing no.) _____ (Nat'l Bd. no.) _____ (6) (year built)

5. The chemical and physical properties of all parts meet the requirements of material specifications of the ASME BOILER AND PRESSURE VESSEL CODE. The design, construction and workmanship conform to ASME Code, Section IV. _____ (7) (year) _____ (8) (addenda (date)) _____ (9) (Code Case no.)

6. (a) Drums:

No.	Inside Diameter, in	Inside Length Ft	Inside Length in	Shell Plates: Mat'l Spec. Grade	Shell Plates: Thickness in	Shell Plates: Inside Radius in	Tube Sheets: Thickness in	Tube Sheets: Inside Radius in	Tube Hole Ligament Efficiency, %: Longitudinal	Tube Hole Ligament Efficiency, %: Circumferential
1				(11)	(42)		(42)			
2										

No.	Longitudinal Joints: No. & Type*	Longitudinal Joints: Efficiency	Circum Joints: No. & Type	Circum Joints: Efficiency	Heads: Mat'l Spec. Grade	Heads: Thickness in		Heads: Type**	Heads: Radius of Dish	Hydrostatic Test, psi
1					(11)	(43)			(44)	(45)
2										

*Indicate if (1) seamless, (2) fusion welded

**Indicate if (1) flat, (2) dished, (3) ellipsoidal, (4) hemispherical

6. (b) Boiler tubes:

Diameter	Thickness	Mat'l Spec. No. Grade	No.	How Attached

6 (c) Headers no. (46) _____ (11) _____ (42) or (43)
(box or sinuous or round, mat'l spec. no., thickness)

Heads or ends (47) _____ (11) _____ (43) Hydro. test, psi _____ (45)
(shape, mat'l spec. no., thickness)

6 (d) Staybolts _____ (11)
(mat'l spec. no., diameter, size refillable, net area)

Pitch _____ in Net area _____ sq. in. (supported by one bolt) Design pressure _____ psi

6. (e) Mud drum: (48) (49) (11) (42) or (43)
(for sect. header boilers state size, shape, mat'l spec. no., thickness)

Heads or ends _____ (47) _____ (11) _____ (43) Hydro test, psi _____ (45)
(shape, mat'l spec. no., thickness)

7. Waterwall headers:

No.	Size and Shape	Material Spec. No. Gr.	Thickness in	Shape	Thickness in	Material Spec. No. Gr.	Hydro Test psi	Diameter in	Thickness in	Material Spec. No., Gr.
1	(48) (49)	(11)	(42) or (43)	(47)	(43)	(11)	(45)	(50)	(51)	(11)
2										
3										

8. (a) Other parts (1)_____ (2)_____ (3)_____ 8 (b) Tubes for other parts: _____

1										
2										
3										

9. Nozzles, inspection and safety valve openings (25)

Purpose (gage, outlet, drain, etc.)	No.	Dia. or Size	Type	How Attached	Mat'l	Nom. Thickness	Reinforcement Mat'l	Location
Handhole up to 3" x 4"		(52)	(53)		NA		NA	
Manhole								
					(11)			

This form (E00102) may be obtained from the Order Dept., ASME, 22 Law Drive, Box 2300, Fairfield, N.J. 07007-2300.

RS-002974
3/17/02
NUECES

FORM H-3 (Back)

10.

		Design Pressure	Code Par and/or Formula on which MAWP is Based	Shop Hydro Test psi	Heating Surface sq ft
a	Boiler				
b	Waterwall				
c	Superheater				
d	Other parts				

Heating surface to be stamped on drum heads. This heating surface not to be used for determining minimum safety valve capacity

11 Field Hydro. Test psi

12. Manufacturers' Partial Data Reports properly identified and signed by Commissioned Inspectors have been furnished for the following items of this report: _____ (30) _____ (36) _____

(name of part, item number, mfr's. name, and identifying stamp)

13. Remarks: _____

CERTIFICATE OF SHOP COMPLIANCE

We certify that the statements made in this data report are correct and that all details of design, material, construction, and workmanship of this boiler conform to Section IV of the ASME BOILER AND PRESSURE VESSEL CODE.

"H" Certificate of Authorization no. _____ (31) _____ expires _____, 19_____.

Date _____ (32) _____ Signed _____ Name _____

(by representative) (manufacturer that constructed and certified boiler)

(33) CERTIFICATE OF SHOP INSPECTION

Boiler constructed by _____ at _____.

I, the undersigned, holding a valid commission issued by the National Board of Boiler and Pressure Vessel Inspectors and/or the state or province of _____ (34) _____ and employed by _____ have inspected parts of this boiler referred to as data items _____ (35) _____ and have examined Manufacturers' Partial Data Reports for items _____ (36) _____ and state that, to the best of my knowledge and belief, the manufacturer has constructed this boiler in accordance with Section IV of the ASME BOILER AND PRESSURE VESSEL CODE.

By signing this certificate neither the inspector nor his employer makes any warranty, expressed or implied, concerning the boiler described in this Manufacturers' Data Report. Furthermore, neither the inspector nor his employer shall be liable in any manner for any personal injury or property damage or a loss of any kind arising from or connected with this inspection.

Date _____ Signed _____ Commissions _____ (37) _____

(Authorized Inspector) (Nat'l Bd (incl endorsements) state, prov and no.)

CERTIFICATE OF FIELD ASSEMBLY COMPLIANCE

We certify that the field assembly construction of all parts of this boiler conforms with the requirements of SECTION IV of the ASME BOILER AND PRESSURE VESSEL CODE.

"H" Certificate of Authorization no. _____ (38) _____ expires _____, 19_____

Date _____ (39) _____ Signed _____ Name _____

(by representative) (assembler that certified and constructed field assembly)

(40) CERTIFICATE OF FIELD ASSEMBLY INSPECTION

I, the undersigned, holding a valid commission issued by the National Board of Boiler and Pressure Vessel Inspectors and/or the state or province of _____ (34) _____ and employed by _____ have compared the statements in this Manufacturer's Data Report with the described boiler and state that the parts referred to as data items _____ (41) _____ not included in the certificate of shop inspection, have been inspected by me and that to the best of my knowledge and belief the manufacturer and/or the assembler has constructed and assembled this boiler in accordance with Section IV of the ASME BOILER AND PRESSURE VESSEL CODE. The described boiler was inspected and subjected to a hydrostatic test of _____ psi.

By signing this certificate neither the inspector nor his employer makes any warranty, expressed or implied, concerning the boiler described in this Manufacturers' Data Report. Furthermore, neither the inspector nor his employer shall be liable in any manner for any personal injury or property damage or a loss of any kind arising from or connected with this inspection.

Date _____ Signed _____ Commissions _____ (37) _____

(Authorized Inspector) (Nat'l Bd (incl endorsements) state, prov and no.)

RS-002976
1/17/02
NUECES

FORM H-4 MANUFACTURERS' PARTIAL DATA REPORT
As Required by the Provisions of the ASME Code Rules
Attach to the applicable Data Report, Section IV

1. Manufactured and certified by _____ (1) (name and address of manufacturer) _____ H ID# (73)

2. Manufactured for _____ (2) (name and address of purchaser) _____

3. Location of installation _____ (3) (name and address) _____

4. Identification of part(s):

Name of Part	Line No	Mfr's Serial No	Mfr's Drawing No	CRN	Nat'l Bd No	Year Built
(72)	(72)	(5)				(6)

5. The chemical and physical properties of all parts meet the requirements of material specifications of the ASME BOILER AND PRESSURE VESSEL CODE. The design, construction and workmanship conform to ASME Code, Section IV. (7) (year) (8) (addenda (date)) (9) (Code Case no.)

6. (a) Drums:

No	Inside Diameter, in	Inside Length Ft	Inside Length In	Shell Plates: Mat'l Spec No. Grade	Shell Plates: Thickness in	Shell Plates: Inside Radius in	Tube Sheets: Thickness in	Tube Sheets: Inside Radius in	Tube Hole Ligament Efficiency, %: Longitudinal	Tube Hole Ligament Efficiency, %: Circumferential
1				(11)	(42)		(42)			
2										

No	Longitudinal Joints: No. & Type*	Longitudinal Joints: Efficiency	Circum Joints: No. & Type	Circum Joints: Efficiency	Heads: Mat'l Spec No. Grade	Heads: Thickness in		Heads: Type**	Heads: Radius of Dish	Hydrostatic Test psi
1					(11)	(43)			(44)	(45)
2										

*Indicate if (1) seamless (2) fusion welded

**Indicate if (1) flat (2) dished (3) ellipsoidal (4) hemispherical

6. (b) Boiler tubes:

Diameter	Thickness	Mat'l Spec No. Grade	No.	How Attached

6 (c) Headers no (46) (11) (42 or 43)
(box or sinuous or round mat'l spec no. thickness)

Heads or ends (47) (11) (43) Hydro. test, psi (45)
(shape mat'l spec no. thickness)

6 (d) Staybolts (11)
(mat'l spec no. diameter size telltale net area)

Pitch ____ in Net area ____ sq. in (supported by one bolt) Design pressure ____ psi

6. (e) Mud drum: (48) (49) (11) (42 or 43) Heads or ends (47) (11) (43) Hydro test, psi (45)
(for sect. header boilers state size shape mat'l spec no. thickness) (shape mat'l spec no. thickness)

7. Waterwall headers:

No	Size and Shape	Material Spec No. Gr	Thickness in	Shape	Thickness in	Material Spec No. Gr	Hydro Test psi	Diameter in	Thickness in	Material Spec No. Gr
1	(48)	(11)	(42 or 43)	(47)	(43)	(11)	(45)	(50)	(46)	(11)
2										
3										

8. (a) Other parts (1)_____ (2)_____ (3)_____ 8 (b) Tubes for other parts _____

1										
2										
3										

This form (E00103) may be obtained from the Order Dept., ASME, 22 Law Drive, Box 2300, Fairfield, N.J. 07007-2300.

RS-002976
1/17/02
NUECES

FORM H-4 (Back)

9. Nozzles, inspection and safety valve openings: (25)

Purpose (inlet, outlet, drain, etc.)	No	Dia or Size	Type	How Attached	Mat'l	Nom Thickness	Reinforcement Mat'l	Location
Handhole up to 3" x 4"		(52)	(53)		NA		NA	

10.

		Design Pressure	Code Per and/or Formula on Which MAWP is Based	Shop Hydro Test psi	Heating Surface Sq Ft
a	Boiler				
b	Waterwall				
c	Other parts				

Heating surface or kW to be stamped on drum heads

This heating surface not to be used for determining minimum safety valve capacity

11. Field Hydro Test psi

12. Remarks: (26)

CERTIFICATE OF SHOP COMPLIANCE

We certify that the statements made in this partial data report are correct and that all details of design, material, construction, and workmanship of these parts conform to Section IV of the ASME BOILER AND PRESSURE VESSEL CODE.

"H" Certificate of Authorization no. (31) expires _____, 19_____.

Date (32) Signed _____ Name _____

(by representative) (manufacturer that constructed and certified boiler)

(33) CERTIFICATE OF SHOP INSPECTION

I, the undersigned, holding a valid commission issued by the National Board of Boiler and Pressure Vessel Inspectors and/or the state or province of (34) and employed by _____

_____ have inspected the part of a boiler described in this Manufacturer's Partial Data Report on _____, 19____, and state that to the best of my knowledge and belief, the manufacturer has constructed this part in accordance with Section IV of the ASME BOILER AND PRESSURE VESSEL CODE. By signing this certificate, neither the inspector nor his employer makes any warranty, expressed or implied, concerning the part described in this Manufacturers' Partial Data Report. Furthermore, neither the inspector nor his employer shall be liable in any manner for any personal injury or property damage or a loss of any kind arising from or connected with this inspection.

Date _____ Signed _____ Commissions (37)

(Authorized inspector) (Nat'l Bd (incl. endorsements) state, prov. and no.)

RS-002977
1/17/02
NUECES

FORM H-5 MANUFACTURERS' MASTER DATA REPORT FOR BOILERS CONSTRUCTED FROM CAST IRON

As Required by the Provisions of the ASME Code Rules, Section IV

1. Manufactured and certified by ____ (1) ____
(name and address of manufacturer) (foundry identification)

2. Boiler type or model no. ____ (4) ____

3. Boiler section data: (57)

Section Designation (list each individual section in boiler assembly)	Pattern and/or Part No	Metal Thickness According to Drawing
(a)		
(b)		
(c)		
(d)		
(e)		

4. Boiler section bursting data: (58)

Section Designation	Bursting Pressure, Metal Thickness Measured at *Break or Fracture, and Weight of Section*		
	Test No. 1	Test No. 2	Test No. 3
(a)	____ psi	____ psi	____ psi
	____ in	____ in.	____ in.
	____ lb.	____ lb.	____ lb.
(b)	____ psi	____ psi	____ psi
	____ in	____ in.	____ in.
	____ lb	____ lb.	____ lb.
(c)	____ psi	____ psi	____ psi
	____ in	____ in.	____ in.
	____ lb	____ lb	____ lb.
(d)	____ psi	____ psi	____ psi
	____ in	____ in	____ in.
	____ lb	____ lb.	____ lb.
(e)	____ psi	____ psi	____ psi
	____ in	____ in.	____ in.
	____ lb.	____ lb.	____ lb.

5. Minimum specified tensile strength ____ (59) ____ psi

6. Tensile strength of associated test bars (60)

Section Designation	Bar for Test No. 1	Bar for Test No. 2	Bar for Test No. 3
(a)	____ psi	____ psi	____ psi
(b)	____ psi	____ psi	____ psi
(c)	____ psi	____ psi	____ psi
(d)	____ psi	____ psi	____ psi
(e)	____ psi	____ psi	____ psi

7. Specification no. and class of gray iron ____

8. Maximum Allowable working pressure of boiler* ____ (61) ____ psi

*Determined by using formula in HC-402 and by selection of lowest values of bursting pressure from tests recorded in item 4 of this report

This form (E00041) may be obtained from the Order Dept., ASME, 22 Law Drive, Box 2300, Fairfield, N.J. 07007-2300.

RS-002978
1/17/02
NUECES

FORM H-5 (Back)

9 Sketch of section with lowest bursting pressure

Show location of
failure and indicate whether
principally in bending or tension

10. Examination data (62)

(a) Test engineer _____ (name)

(b) Witness of test(s) _____ (name)

(c) Date(s) of destruction tests _____

_____

_____

11 Manufacturer's certification: (63)

Date _____ 19____

Certified to be true record

_____ (name and title)

Note: Signature of designated responsible engineering head of the manufacturer must be notarized

12. ASME Certificate of Authorization no. _____ (31) _____ to use the "H" symbol (cast iron).
Certificate expires _____ 19____

RS-002979
1/17/02
NUECES

FORM HLW-6 MANUFACTURER'S DATA REPORT FOR WATER HEATERS OR STORAGE TANKS
As Required by the Provisions of the ASME Code Rules

1. Manufactured and certified by ① (name and address of manufacturer)

2. Manufactured for ② (name and address of purchaser)

3. Location of installation ③ (name and address)

4. Identification: ④ (mfr's. serial no.) (CRN) (drawing no.) (Nat'l Bd. no.) ⑥ (year built)

5. The chemical and physical properties of all parts meet the requirements of material specifications of the ASME BOILER AND PRESSURE VESSEL CODE. The design, construction, and workmanship conform to Part HLW, Section IV ⑦ (year) ⑧ (addenda (date)) ⑨ (Code Case no.)

6. Shell: ⑩ (no.) ⑪ (mat'l. spec., gr.) ⑫ (thickness (in.)) ⑬ (lining) ⑭ (dia. (in.)) (length (ft. & in.) (overall))

7. Joints: ⑫ (long. (seamless, welded)) ⑬ (eff. (compared to seamless)) ⑫ (girth (seamless, welded)) (no. of shell courses)

8. Heads: ⑰

Location	Mat'l. Spec., Gr., Thickness	Crown Radius	Knuckle Radius	Elliptical Ratio	Hemispherical Radius	Flat Dia.	Side Pressure (concave, convex)
	⑪						

9. Tubesheet: ⑪ (mat'l. spec., gr.) Tubes (no.) (size (in.)) (length (ft. & in.) (overall)) ⑪ (mat'l. spec., gr.) (thickness (in.)) (rolled or welded)

10. Nozzles, inspection and safety valve openings: ㉓

Purpose (inlet, outlet, drain, etc.)	No.	Dia. or Size	Type	How Attached	Mat'l	Nom Thickness	Reinforcement Mat'l.	Location
Handhole up to 3" x 4"			NA		NA		NA	
					⑪			

11. MAWP ㉔ (psi) MAX input ㉗ (Btu/hr. or kW) Max temp. ㉖ (°F) Hydro test ㉕ (psi)

12. Manufacturer's Partial Data Reports properly identified and signed by Commissioned Inspectors have been furnished for the following items of this report: ㉚ ㉛ (name of part, item no., mfr's name, identifion stamps)

13. Remarks:

This form (E00105) may be obtained from the Order Dept., ASME, 22 Law Drive, Box 2300, Fairfield, N.J. 07007-2300.

RS-002980
1/17/02
NUECES

FORM HLW-6 (Back)

CERTIFICATE OF SHOP COMPLIANCE

We certify that the statements made in this data report are correct and that all details of design, material, construction, and workmanship of this water heater or storage tank conform to Section IV of the ASME BOILER AND PRESSURE VESSEL CODE.

"HLW" Certificate of Authorization no. _____ expires _____, 19____.

Date _____ Name _____ Signed _____
(manufacturer that constructed and certified water heater or storage tank) (by representative)

CERTIFICATE OF SHOP INSPECTION

Constructed by _____ at _____.

I, the undersigned, holding a valid commission issued by the National Board of Boiler and Pressure Vessel Inspectors and/or the state or province of _____ and employed by _____ have inspected parts referred to as data items _____ and have examined Manufacturer's Partial Data Reports for items _____ and state that, to the best of my knowledge and belief, the manufacturer has constructed this water heater or storage tank in accordance with Section IV of the ASME BOILER AND PRESSURE VESSEL CODE.

By signing this certificate, neither the inspector nor his employer makes any warranty, expressed or implied, concerning the water heater or storage tank described in this Manufacturer's Data Report. Furthermore, neither the inspector nor his employer shall be liable in any manner for personal injury or property damage or a loss of any kind arising from or connected with this inspection.

Date _____ Signed _____ Commissions _____
(Authorized Inspector) (Nat'l Bd (incl endorsements) state, prov and no.)

RS-002981
1/17/02
NUECES

FORM HLW-7 MANUFACTURERS' PARTIAL DATA REPORT FOR WATER HEATERS AND STORAGE TANKS

As Required by the Provisions of the ASME Code Rules

Attach to the applicable Form HLW-6 Data Report

1. Manufactured and certified by _____ (1) _____ HLW-7 ID# (73)
(name and address of manufacturer)

2. Manufactured for _____ (2) _____
(name and address of purchaser)

3. Identification of part(s):

Name of Part	Line No	Identifying No	Manufacturer's Drawing No	Year Built
(54)	(55)	(5)		(6)

4. The chemical and physical properties of all parts meet the requirements of material specifications of the ASME BOILER AND PRESSURE VESSEL CODE. The design, construction, and workmanship conform to Part HLW, Section IV _____ (7) _____ and Addenda to _____ (8) _____
(year) (date)

5. Shell: _____ (54) _____ (11) _____ (42) _____ (85) _____ (84) _____
(no.) (mat'l. spec., gr.) (thickness (in.)) (lining) (dia. (in.)) (length (ft. & in.) (overall))

6. Joints: _____ (12) _____ (13) _____ (12) _____
(long. (seamless, welded)) (eff. (compared to seamless)) (girth (seamless, welded)) (no. of shell courses)

7. Heads: (47)

Location	Mat'l Spec., Gr., Thickness	Crown Radius	Knuckle Radius	Elliptical Ratio	Hemispherical Radius	Flat Dia	Side Pressure (concave, convex)
	(11)						

8. Tubesheet: _____ (11) _____ Tube holes _____
(mat'l spec gr.) (no. and dia.)

9. Tubes: _____ (no.) Size _____ in. Length _____ ft. _____ in. Material spec., gr. (11) _____ Thickness _____ in.

10. Connections:

Purpose	No	Size or Dia	Material Spec., Gr.	Thickness	Reinforcement Material

11. MAWP _____ (86) _____ Max. input _____ (87) _____ Max. temp. _____ (88) _____ Hydrostatic test _____ (89) _____
(psi) (Btu/hr or kW) (°F) (psi)

12. Remarks: _____ (56) _____

This form (E00106) may be obtained from the Order Dept., ASME, 22 Law Drive, Box 2300, Fairfield, N.J. 07007-2300.

RS-002982
1/17/02
NUECES

FORM HLW-7 (Back)

CERTIFICATE OF SHOP COMPLIANCE

We certify the statements in this Manufacturer's Partial Data Report to be correct and that all details of material, construction, and workmanship of this water heater or storage tank conform to Section IV of the ASME BOILER AND PRESSURE VESSEL CODE.

Certificate of Authorization no. (56) to use the "HLW" symbol expires _____, 19____.

Date (52) Signed _____ by _____
(manufacturer that constructed and certified parts) (authorized representative)

(53) CERTIFICATE OF SHOP INSPECTION

I, the undersigned, holding a valid commission issued by the National Board of Boiler and Pressure Vessel Inspectors and/or the state or province of (54) and employed by _____ have inspected the part described in this Manufacturers' Partial Data Report on _____, 19____, and state that to the best of my knowledge and belief, the manufacturer has constructed this part in accordance with Section IV of the ASME BOILER AND PRESSURE VESSEL CODE.

By signing this certificate, neither the inspector nor his employer makes any warranty, expressed or implied, concerning the part described in this Manufacturers' Partial Data Report. Furthermore, neither the inspector nor his employer shall be liable in any manner for personal injury or property damage or a loss of any kind arising from or connected with this inspection.

Date _____ Signed _____ Commissions (57)
(Authorized Inspector) (Nat'l Bd (incl endorsements) state, prov and no.)

RS-002883
1/17/02
NUECES

FORM HLW-8 MANUFACTURER'S MASTER DATA PROOF TEST REPORT FOR WATER HEATERS OR STORAGE TANKS As Required by the Provisions of the ASME Code Rules, Section IV

1. Manufactured and certified by _____ (1) (name and address)

2. Vessel type or model no. (HLW-500): _____ (4)

3. Vessel proof test data:

Vessel Parts	Description or Part No	Mat'l Spec., Gr Thickness According to Drawing (11) (42)	Specified Yield Strength, psi	Min. Tensile, psi
(a)				
(b)				
(c)				
(d)				
(e)				

4. Type of coating: _____ (lime wash or other brittle coating)

5. Test data to determine yielding:

Part Designation Yielding (70)	Yielding Pressure by Flaking of Coating or by Strain Lines (71)	Location of Yielding Whether Bending or Tension (indicate on sketch) (72)

6. Yield strength of test specimens [HLW-502.1(c)]: (a) _____ (72) psi (b) _____ psi (c) _____ psi Average _____ psi

7. Maximum allowable working pressure of vessel: _____ (45) psi [determined by formulas in HLW-502.1(d)]

8. Examination data: (32)

(a) Test engineer _____

(b) Witness of test _____

(c) Date(s) of proof test _____

MANUFACTURER'S CERTIFICATION

We certify that the above data is correct and that the proof test procedure conforms with HLW-500 of Section IV of the ASME BOILER AND PRESSURE VESSEL CODE.

ASME Certificate of Authorization no. _____ (31) to use the "HLW" symbol expires _____, 19____.

Date _____ (53) Certified to be true record _____ _____
(authorized representative)* (manufacturer)

*Note: Signature of manufacturer's designated responsible engineering representative is required.

(33) PROOF TEST CERTIFICATE

The undersigned, holding a valid commission issued by the National Board of Boiler and Pressure Vessel Inspectors and/or the state or province _____ (54) and employed by _____ have witnessed the proof test and the procedures conforming to HLW-500 of Section IV of the ASME BOILER AND PRESSURE VESSEL CODE.

By signing this certificate neither the inspector nor his employer makes any warranty, expressed or implied, concerning the water heater or storage tank described in this manufacturers' proof test report. Furthermore, neither the inspector nor his employer shall be liable in any manner for any personal injury or property damage or a loss of any kind arising from or connected with the witnessing of this proof test.

Date _____ Signed _____ Commissions _____ (37)
(Authorized Inspector) (Nat'l Bd., state, province, and no.)

This form (E00107) may be obtained from the Order Dept., ASME, 22 Law Drive, Box 2300, Fairfield, N.J. 07007-2300.

RS-002984
1/17/02
NUECES