A.I.A. File No. 20-B-1

METAL LATH

specifications for metal lathing and furring

PLAINTIFF'S EXHIBIT

GP-992

how to use these specifications

In the opposite table a general specification has been listed for each type of Metal Lath construction.

This is then supplemented where necessary by another specification devoted to details which are not of a general nature.

For example, if it is desired to write a specification on Solid Metal Lath and Plaster Partitions with Channel Studs, Specification No. 1 is used and it is supplemented at the appropriate place indicated in the specification by Supplementary Specification No. 1-A, which is devoted to details that have to do only with the construction of such type of solid partitions.

These specifications are written in detail so that complete information will be available to those who wish it, but they may be abbreviated as desired, or this document may be referred to as follows:

> "All Metal Lathing and Furring shall be done in accordance with the requirements for the corresponding class of work as specified in Specifications of the Metal Lath Manufacturers Association, dated 1958, provided that where several methods of construction are shown, the contractor shall secure approval of the type he wishes to use before proceeding with the work. The lath to be used shall be as follows: etc." (Here insert weight, type and finish of lath desired.)

Specifications taken from these pages will insure not only safe and permanent construction at an economical cost, but will establish a basis for maximum competition among all manufacturers of Metal Lath.

METAL LATH FOR STRENGTH
PLASTER FOR BEAUTY

table of contents and specifications

General Type of Construction	Gen. Spec.	Supplementary Spec. Nos.	Page
Fire Resistive Ratings			2
Materials			3
Design Tables			4
Types, Weights and Spans of Metal Lath—Table I			
Loading Tables for 3/8" Rib Metal Lath—Table II			
Loading Tables for 3/4" Rib Metal Lath—Table III			
Partitions and Vertical Furring	1		5
(Noncombustible Prefabricated or Channel Studs)			
Solid Partitions		1-A	
Hollow Partitions		1-B	
Double Partitions (Sound-Insulating)		1-C	
Vertical Furring		1-D	
Studless Solid Partitions	2	none	10
Metal Lath Attached Directly to:			
Wood Supports	3		11
Wood Studs		3-A	
Wood Joists		3-B, 3-C	
Metal Lath Attached to Noncombustible Ceiling Supports			
(Contact Ceilings)	4		12
Steel Joists		4-A	
Concrete Joists		4-B	
Furred Metal Lath Ceilings On:	5		14
Steel Joists		5-A	
Concrete Joists		5-B	
Wood Joists		5-C	
Suspended Ceilings of Metal Lath Below:	6		16
Steel Construction		6-A	
Concrete Flat Slab Construction		6-B	
Concrete Joist Construction		6-C	
Wood Construction		6-D	
Metal Lath Beams and Cornices	7	none	18
Columns	8	none	19
Metal Lath and Plaster Protection for Steel Columns			
Stucco—Steel Frame	9	none	19
Metal Lath for Exterior Stucco Reinforcing on Steel Frame Construction			
Stucco—Wood Frame	10	none	20
Metal Lath and Expanded Metal (Stucco Mesh) for Exterior Stucco Reinforcing on Wood Frame Construction			
Corner, Joint and Other Reinforcement on:			20
Other than Metal Lath Base			

REVISED 1958

METAL LATH MANUFACTURERS ASSOCIATION *Engineers Building • Cleveland 14, Ohio*

SGP 0003103

Fire-Resistive Ratings

Typical Metal Lath and Plaster Fireproofing

ILLUSTRATIONS	FIRE RESISTANCE	CONSTRUCTION
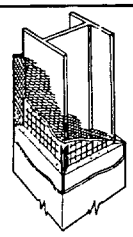 STEEL COLUMNS	4-hours	1¾" gypsum-vermiculite[1, 6] or gypsum-perlite plaster[1, 6] over self-furring metal lath wrapped around column.
	4-hours C	1½" gypsum-perlite plaster[1, 6] over metal lath. Metal lath furred 7/16" from column with ¾" channel brackets at approximately 2' vertical spacings.
	3-hours C	1⅜" gypsum-vermiculite[1, 6] or gypsum-perlite plaster[1, 6] over self-furring metal lath wrapped around column.
	2-hours C	1" gypsum-perlite plaster[1, 6] over self-furring metal lath wrapped around column.
	1-hour B	¾" gypsum-sanded plaster[7] 1:3 mix on metal lath.
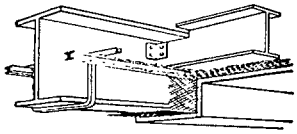 STEEL BEAMS, GIRDERS AND TRUSSES	4-hours	1" gypsum-vermiculite plaster[1, 6] over metal lath with at least a 2½" air space between lath and protected structural members.
	4-hours B, C	1" gypsum-perlite plaster[3, 6] on metal lath, with at least a 3" air space between lath and structural members.
	4-hours B, C	1" gypsum-vermiculite plaster[1, 7] on metal lath.[4]
	3-hours B	¾" gypsum-vermiculite plaster[1, 7] on metal lath.[4]
	2-hours B	1" gypsum-sanded plaster[7] 1:2, 1:3 on metal lath.[4]
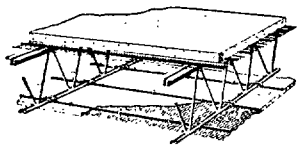 STEEL JOIST FLOORS	4-hours B	Floor: 2½" concrete on metal lath. Ceiling: 1" gypsum-vermiculite plaster[1, 7] on metal lath.
	3-hours B	Floor: Same as above. Ceiling: ¾" gypsum-vermiculite plaster[1, 7] or 1" neat wood-fibered gypsum plaster on metal lath.
	2-hours B	Floor: 2¼" concrete on metal lath. Ceiling: ¾" gypsum-sanded plaster[7] 1:2, 1:3 on metal lath.
	1½-hours B	Floor: 2" concrete on metal lath. Ceiling: ¾" gypsum-sanded plaster[7] 1:2, 1:3 mix, or ¾" portland cement plaster[7] 1:2, 1:3 with 15 lbs. hydrated lime and 3 lbs. asbestos fiber per bag of cement, on metal lath.
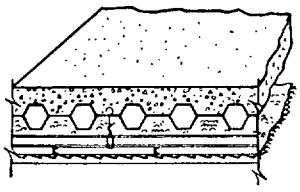 CELLULAR STEEL FLOORS	4-hours C	Floor: 2" concrete (minimum thickness over cells). Ceiling: ⅞" gypsum-vermiculite plaster[2, 6] over metal lath. Metal lath required to be at least 2¼" from underside of cellular steel panel.
	4-hours C	Floor: 2" perlite concrete (minimum thickness over cells). Ceiling: 1" gypsum-perlite plaster[3, 6] over metal lath. Metal lath required to be at least 3" from underside of floor panel and steel beams.
	4-hours C	Floor: 2½" concrete (minimum thickness over cells). Ceiling ⅝" gypsum-vermiculite plaster[1, 6] plus ½" vermiculite acoustic plastic over metal lath. Metal lath required to be at least 7¼" from underside of floor panel.
	4-hours C	Floor: 3¼" concrete (minimum thickness over cells). Ceiling: 1" gypsum-perlite plaster[2, 6] over metal lath. Metal lath attached directly to underside of floor panel. Beams plastered 1½" thick over face of lath with same mix.
	3-hours C	Floor: 2" concrete (minimum thickness over cells). Ceiling: ⅞" gypsum-vermiculite plaster[1, 6] over metal lath. Space from lath to floor at least 15⅜", and from lath to beams 3½". (See[5])
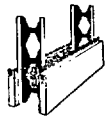 (non-load bearing) HOLLOW PARTITIONS	2½-hours B	1" neat wood-fibered gypsum[7]
	2-hours B, D	1" gypsum-perlite[1, 6]
	2-hours B, D	⅞" neat wood-fibered gypsum[7]
	1-hour B	¾" gypsum-sanded[7] 1:2, 1:2 mix
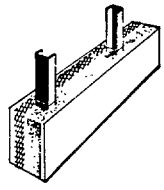 (non-load bearing) SOLID PARTITIONS	2½-hours B	2½" neat wood-fibered gypsum
	2-hours B, C	2½" gypsum-vermiculite or perlite plaster[1]
	2-hours B, C	2" neat wood-fibered gypsum
	1-hour A	2" gypsum-sanded, 1:2, 1:2 mix ¾" channel studs
	1-hour A	2" gypsum-sanded, 1:2, 1:2 mix Studless

Note: Gypsum-sanded or portland cement plaster mixed 1:2, 1:2 means 1 part neat to 2 parts sand aggregate by weight for both scratch and brown coats.

1. Scratch coat: 100 lbs. gypsum to 2 cu. ft. of aggregate. Brown coat: 100 lbs. gypsum to 3 cu. ft. of aggregate.
2. 100 lbs. gypsum to 2½ cu. ft. of aggregate for both scratch and brown coats.
3. 100 lbs. gypsum to 3 cu. ft. of aggregate for both scratch and brown coats.
4. These ratings are based on tests in which light-rolled sections and open-web joists were protected with metal lath and plaster ceilings attached directly to the bottom flanges.
5. Tested with openings for non-combustible ducts, electrical outlets, and pipes. Their permissible combined area did not exceed 100 sq. in. per 100 sq. ft. of ceiling area. No failure, but test arbitrarily discontinued at 3 hours.
6. Plaster thickness is measured from face of metal lath to finished plaster surface.
7. Plaster thickness is measured from back plane of metal lath, exclusive of ribs, to finished plaster surface.

Authorities cited are: A—Ohio State University, B—National Bureau of Standards, C—Underwriters' Laboratories, D—University of California.

For additional Information or details of construction, write for TECHNICAL BULLETIN NOS. 3 and 8.

SGP 0003104

Specifications for Materials

Attention is called to the fact that these specifications are written upon the basis of weight only, which will insure correct installation and facilitate accurate inspection in the field. This basis was adopted at one of the early conferences of producers, distributors and users of Metal Lath held at the U. S. Department of Commerce. "Simplified Practice Recommendation 3-52" is the most recent publication of the U. S. Department of Commerce covering Metal Lath and Metal Plastering Accessories.

metal lath

All Metal Lath shall be made from copper alloy steel sheets, and shall be given a protective coating of rust-inhibitive paint after fabrication, or shall be made from galvanized sheets.

All Metal Lath shall be specified by weight per square yard (except ¾" Rib Metal Lath which shall be specified by weight per square foot), and shall be of the types and weights as set forth elsewhere in these specifications. All weights are exclusive of paper, fibre, or other backing.

expanded metal reinforcing (stucco mesh)

All Expanded Metal Reinforcing (Stucco Mesh) shall be made from steel sheets, and shall be given a protective coating of rust-inhibitive paint after fabrication.

channels

Channels shall be of steel and shall be given a protective coating of rust-inhibitive paint. Width and weight of channels shall be as set forth elsewhere in these specifications.

metal studs

Prefabricated Metal Studs shall be given a protective coating of rust-inhibitive paint. The width shall be as set forth elsewhere in these specifications. Prefabricated Metal Studs shall be:

Fabricated as channels from 18 gage strip steel, with punched openings along entire length of web, between flanges, or

Fabricated from doubled No. 7 gage round rods on each side, with a single No. 7 gage round rod forming an open-web trusslike pattern, and all points of contact welded, or

Fabricated from 16 gage steel angles with a single No. 7 gage round rod forming an open-web trusslike pattern between flanges, and all points of contact welded.

accessories

Metal plastering accessories (small-nose and bull-nose corner beads, base screed, concealed picture mold, and metal casing beads) shall be formed from galvanized steel sheets of not less than 26 gage.

wire

Wire shall be galvanized, annealed, and gage shall be as set forth elsewhere in these specifications. All gages are the United States steel wire gage. The weight of zinc-coated finish (galvanized) shall be not less than Type 1 as set forth in Federal Specification QQ-W-461b, Wire, Steel (Carbon), Bare and Coated.

Definitions of terms

The following definitions for Metal Lath construction have been established by long usage:

METAL LATH—Metal Lath is of three types, designated as Diamond Mesh (also called Flat Expanded Metal Lath), Rib or Sheet. Metal Lath is slit and expanded, or slit, punched or otherwise formed, with or without partial expansion, from copper alloy or galvanized metal sheets. Metal Lath is coated with rust-inhibitive paint after fabrication, or is made from galvanized sheets.

DIAMOND MESH OR FLAT EXPANDED METAL LATH—This term is used to indicate a Metal Lath slit and expanded from metal sheets into such a form that there will be no rib in the lath.

RIB—An unexpanded portion of Metal Lath which leaves the plane of the Lath at a certain angle and returns at the same angle, or a separately attached stiffening member.

FLAT RIB METAL LATH—A combination of expanded Metal Lath and ribs in which the rib has a total depth of less than ⅛" measured from top inside of the lath to the top side of the rib.

⅜" RIB METAL LATH—A combination of expanded Metal Lath and ribs of a total depth of approximately ⅜" measured from top inside of the lath to the top side of the rib, or other Metal Lath of equal rigidity.

¾" RIB METAL LATH—A combination of expanded Metal Lath and ribs of a total depth of approximately ¾" measured from the top inside of the lath to the top side of the rib.

SELF-FURRING METAL LATH—A Metal Lath so formed that portions of it extend from the face of the lath so that it is separated at least ¼" from the background to which it is attached.

PAPER BACKED METAL LATH OR EXPANDED METAL REINFORCING—A factory-assembled combination of any of the preceding defined types of Metal Lath or Expanded Metal Reinforcing with paper, fibre, or other backing, the assembly being used as a plaster or stucco base.

SHEET LATH—A Metal Lath, slit, or punched or otherwise formed from metal sheets.

(NOTE: See manufacturers' catalogs for detailed description of various types of Sheet Lath for special purposes.)

EXPANDED METAL REINFORCING (STUCCO MESH)—A reinforcement similar to Metal Lath but cut and expanded from heavier metal sheets and especially suitable for exterior stucco work and for reinforcing cement base for tile and mosaic floors.

CORNERITE OR CORNER LATH—A strip of Diamond Mesh Metal Lath bent to form a right angle and applied as corner reinforcement at all internal vertical and horizontal angles of any interior surfaces to be plastered, including wood lath, gypsum lath, fiberboard lath, and junctures at wall and ceiling intersections of dissimilar plaster bases; also used in angles where ends of Rib or Sheet Lath abut.

STRIPITE OR STRIP LATH—A narrow strip of Diamond Mesh Metal Lath applied as a reinforcement over joints between sheets of gypsum lath, fiberboard lath and similar materials used as plaster bases, or at junctures between such bases.

MAIN RUNNERS OR CARRYING CHANNELS—The heaviest horizontal members, supported by hangers, in a suspended ceiling and to which the furring channels or rods are attached; also may be attached direct to the construction above.

FURRING CHANNELS OR RODS—The smallest horizontal members of a suspended ceiling, applied at right angles to the underside of carrying channels and to which the Metal Lath is attached; also the smallest horizontal members in a furred ceiling; also, in general, the separate members used to space Metal Lath from any surfaces over which it is applied.

HANGERS—The vertical members which carry the steel framework of a suspended ceiling; also the vertical members which support furring under concrete joist construction; also the wires used in attaching lath directly to concrete joist construction.

CONTACT CEILING—A ceiling composed of Metal Lath and plaster which is secured in direct contact with the construction above, without the use of runner channels or furring.

FURRED CEILING—A ceiling composed of Metal Lath and plaster which is attached by means of steel channels, or rods, or wood furring strips, in direct contact with the construction above.

SUSPENDED CEILING—A ceiling composed of Metal Lath and plaster and steel channels which is suspended from and is not in direct contact with floor or roof construction above.

Types and Weights of Metal Lath and Spacing of Supports

TABLE I

Type of Lath	Weight of Lath Lb. Per Sq. Yd.	Walls and Partitions			Ceilings	
		Wood Studs	Solid Partitions	Steel Studs, Vertical Furring, etc.	Wood or Concrete	Metal
Diamond Mesh (flat expanded)	2.5 3.4	16" 16"	16" 16"	12" 16"	0 16"	0 13½"
Flat Rib	2.75 3.4	16" 19"	16" 24"(3)	16" 19"	16" 19"	12" 19"
⅜" Rib and Rod-Ribbed (1) (2)	3.4 4.0	24" 24"	(4) (4)	24" 24"	24" 24"	24" 24"
Sheet Lath (2)	4.5	24"	(4)	24"	24"	24"

Weights are exclusive of paper, fiber, or other backing.

(1) 3.4 lb., ⅜" Rib Lath is permissible under concrete joists at 27" c.c.

(2) These spacings are based on a narrow bearing surface for the lath. When supports with a relatively wide bearing surface are used, these spacings may be increased accordingly, and still assure satisfactory work.

(3) This spacing permissible for solid partitions not exceeding 16' in height. For greater heights, permanent horizontal stiffener channels or rods must be provided on channel side of partitions, every 6' vertically, or else spacing shall be reduced 25%.

(4) See *Technical Bulletin No. 2, Studless Metal Lath and Plaster Solid Partitions.*

note:

For exterior stucco work, Expanded Metal Reinforcing weighing either 1.8 or 3.6 pounds per square yard may be used. Attachments shall not be greater than 6" on centers vertically.

Loading Tables For Metal Lath Centering

⅜" and ¾" Rib Metal Laths are widely used as combination form, centering and reinforcing for slabs in steel construction. Weight of lath to be used may be determined from Tables II and III.

note:

For additional information and specifications on Metal Lath Centering write for *Technical Bulletin No. 6.*

TABLE II FOR ⅜" RIB LATH

Thickness of Slab Above Mesh	Wt. of Concrete (Lbs. Per Sq. Ft.)	Weight of Lath (Lbs. Per Sq. Yd.)	SAFE SUPERIMPOSED LOADS (Lbs. Per Sq. Ft.) Span in Inches			
			12"	16"	19"	24"
2"	24	3.4	950	536	380	238
2"	24	4.0	1090	613	433	271
2½"	30	3.4	1200	675	479	300
2½"	30	4.0	1360	766	544	340
3"	36	3.4	1450	815	578	362
3"	36	4.0	1650	930	625	412

TABLE III FOR ¾" RIB LATH

ASSUMED CONDITIONS:

Figures shown are for Live Loads only; Dead loads to be added.

Stress in Steel (f_s)—16000 lbs. per sq. in.

Stress in Concrete (f_c) variable as per Table.

Ratio of Modulus of Elasticity of Steel (E_s) to Modulus of Elasticity of Concrete (E_c) = n = 15.

Distance of Center of Gravity of Lath above Bottom of Sheet — .163 of an in.

Table based on moment of $\frac{WL}{10}$

Thickness of Slab Above Mesh	Weight of Slab Per Sq. Ft. (Lbs.)	Weight with ½" P.C. Plaster Under Slab* (Lbs.)	Weight of Lath Per Sq. Ft. (Lbs.)	Resisting Moment (R.M.) (In.-Lbs. Per Ft. of Width)	Stress in Concrete in Lbs. Per Sq. In. (f_c)	Maximum Span for Centering Wet Concrete	Safe Superimposed Loads (Lbs. Per Sq. Ft.) Span in Feet			
							3'	4'	5'	6'
2"	24	30	.60	3840	600	3'-3"	325	170	98	59
2"	24	30	.75	5050	690	3'-7"	438	233	138	87
2½"	30	36	.60	4940	520	2'-11"	422	222	129	78
2½"	30	36	.75	6490	620	3'-3"	...	302	180	114
3"	36	42	.60	6049	460	2'-8"	518	273	160	98
3"	36	42	.75	7960	550	2'-11"	...	373	224	142
3½"	42	48	.60	7160	420	2'-5"	...	325	190	117
3½"	42	48	.75	9440	490	2'-9"	...	442	267	170
4"	48	54	.60	8289	390	2'-3"	...	378	222	138
4"	48	54	.75	10920	460	2'-6"	...	514	310	198

*To improve appearance, and to further enchance the strength of the slab, ½" of portland cement plaster may be used on the underside of the lath.

General Specifications No. 1

Solid and Hollow Partitions
Double Partitions (Sound Insulating)
Vertical Furring

With Noncombustible Studs (Prefabricated or Channel)

1.1—ERECTION OF METAL LATH

1.1.1—All Metal Lath shall be specified by weight per square yard in accordance with the spacing of supports as given in Table I (page 4).

1.1.2—Metal Lath shall be applied with the long dimension of the sheet across the studs; Rib Metal Lath with the ribs against the studs. For solid partitions, lath shall be applied only to one side of the channel studs.

1.1.3—Metal Lath shall be secured to supports at intervals not exceeding 6", a tie shall be placed where sides of sheets lap at supports, and at side laps of sheets between supports. Tie wire shall be not less than No. 18 gage galvanized annealed wire.

Equivalent clips or other attachment devices may be used instead of wire ties.

1.1.4—Diamond Mesh Metal Lath shall be lapped at sides not less than ½", and at ends not less than 1". End laps of sheets should generally occur only over supports; if between, ends of sheets shall be laced or adequately tied with No. 18 gage galvanized annealed wire.

1.1.5—Rib Metal Lath and Sheet Lath shall be lapped at sides by nesting outside ribs or selvage. Rib Metal Lath shall be lapped 1" at ends and Sheet Lath shall be lapped 1" at ends or nested.

1.1.6—Where the adjoining surface is to be plastered, Diamond Mesh Metal Lath shall be started one stud away from corner and be bent into the corner and carried on to the abutting wall to avoid a joint at juncture of walls, and where Rib Metal Lath or Sheet Lath is used it shall be butted into all corners, and Cornerite shall be applied over abutting lath in such angles and shall be wired at 6" intervals along each edge in all corners. (Cornerite shall not be fastened at its corner, but only along each edge. Cornerite is not required for Diamond Mesh Metal Lath.) Where adjoining surface is not to be plastered, the Metal Lath shall be suitably attached to the abutting wall, and such attachments completely embedded in the plaster.

1.2—ASSEMBLY OF STUDS OR CHANNELS

1.2.1 etc.—

Insert here applicable supplementary specification as follows:

Solid Partitions, Specification No. 1-A (page 6).
Hollow Partitions with Metal Studs, Specification No. 1-B (page 7).
Sound-Insulating Double Partitions, Specification No. 1-C (page 8).
Metal Lath Vertical Furring, Specification No. 1-D (page 9).

Alternate Method for Removable Partitions—For removable partitions, lower end of studs shall be secured to track channels or special stud shoes attached to wood runners, or be set in holes bored into, or wire-tied to 8d nails driven into wood floor runners of proper width nailed to wood floor or ceiling joists, such runners to be secured to masonry floor by masonry nails or expansion drives.

1.3—METAL BASE SCREED, PICTURE MOLD, INTEGRAL METAL TRIM, CORNER BEAD

1.3.1—Metal base screed, picture mold, or integral metal trim shall be wired to studs or Metal Lath through holes provided in the screed, mold or trim, and, where necessary, shimmed-out to line. Metal base shall be installed according to the manufacturer's specifications.

1.3.2—All external angles to be plastered shall be protected with galvanized expanded wing or perforated corner beads. Corner bead shall be attached securely in such manner as to assure proper alignment during application of plaster, and for proper plaster thickness.

1.4—BUCKS

1.4.1—Bucks shall be carefully plumbed and either anchored to the soffit of the roof or floor above, or be temporarily braced until the plaster has set.

1.4.2—Metal door bucks shall be installed in accordance with the manufacturer's specifications.

1.4.3—Wood door bucks shall be of an out-to-out dimension which will permit casing to cover joint between buck and plaster at least 1".

1.4.4—Bottom of wood door bucks shall be securely anchored to floor.

Applicable Only to Metal Lath and Plaster Sound-Insulating Double Partitions

1.4.5—Metal door bucks shall be installed in accordance with manufacturer's specifications. Where maximum sound insulation is desired, provide felt or cork-pad between buck and floor. Bucks shall be well-anchored and secured by expansion drives, through pads (where used), and penetrate at least 1" into floor and ceiling slabs.

1.4.6—For maximum sound insulation, a split or double-buck shall be used around entire opening with cork or other insulation between it and floor and between halves of bucks if connection is necessary. Provide sound-deadened casing around openings and "soundproof" doors in openings.

1.5—PLASTERING

1.5.1—Plastering shall be gypsum, lime, Keene's cement, or portland cement or combinations of them. Plaster thickness when measured from the face of the Metal Lath shall be ⅝" minimum. Plaster thickness when measured from the back plane of the Metal Lath, exclusive of ribs, shall be ¾" minimum.

note: *Portland cement plaster is recommended for basement partitions, shower stall enclosures and elsewhere in which continued or large amounts of moisture are experienced.*

note: *Where a partition is continuous over the face of a concrete beam or column, it should be isolated from the movement of these structural members by placing paper between the concrete and Metal Lath.*

supplementary specification no. 1-A — **SOLID PARTITIONS WITH CHANNEL STUDS**

(To be used in conjunction with Specification No. 1, page 5)

note: *Consult manufacturers' catalogs for information on special solid partition systems and metal base.*

A1.2.1—Size of channel studs and thickness of solid partitions shall be determined by height of partition as set forth in Table IV. Type and weight of Metal Lath shall determine the maximum spacing of studs in accordance with Table I.

A1.2.2—Channel studs shall be securely fastened to the soffit of the roof or floor above, or to the joists, or to a suspended ceiling. Channels, pencil rods, cornerite, or special types of ceiling runners may be used provided they hold the top of the studs securely in line.

A1.2.3—Ends of channel studs may be bent and nailed directly to the floor or to a wood runner, or stud ends may be set in holes cut in the top of concrete floors or into special types of metal floor runners. Metal base shall be installed according to the manufacturer's specifications. For solid partitions, metal base shall be filled with grout after the channel studs have been erected and either before or after the Metal Lath has been wired to the studs.

A1.2.4—Where two-piece studs are used, they shall be spliced within 2 feet of the ceiling by lapping not less than 8", with flanges interlocked and securely wired near each end of splice. Single-piece studs shall be of such length that they will not bow when erected.

note: *Regarding installation of bucks, see section 1.4 (page 5).*

A1.2.5—Channel studs shall be placed along each side of the buck and so spaced that Metal Lath can be wire-tied to the stud. For wood bucks, two 8d nails shall be driven in pairs at intervals of 2' beginning 9" above the floor, and the channel securely wire-tied to these nails. Channel studs shall be wire-tied to the anchors on each side of metal bucks.

Alternate—Studs adjacent to buck may be omitted if other means of attaching lath is provided and buck is temporarily braced before plastering.

A1.2.6—A horizontal reinforcement (⅛" x 1¼" flat bar or ⅜" rod) shall be attached 6" to 8" above the door opening on the channel side of the partition. It shall extend continuously past the first stud beyond the opening. This reinforcement shall be saddle-tied to each vertical stud it crosses.

A1.2.7—Studs shall be doubled at cased openings and partition ends protected with a galvanized metal partition cap.

A1.2.8—Solid partitions shall be temporarily braced when necessary on the channel side before application of plaster.

A1.2.9—Wood Grounds—Wood grounds and wood nailing strips for attaching trim, cupboards and other fixtures shall be set true to line and shall be placed on each side of the partition and wired or nailed to each other, or wired to studs, or nailed to blocks which shall be securely wired or clamped to studs.

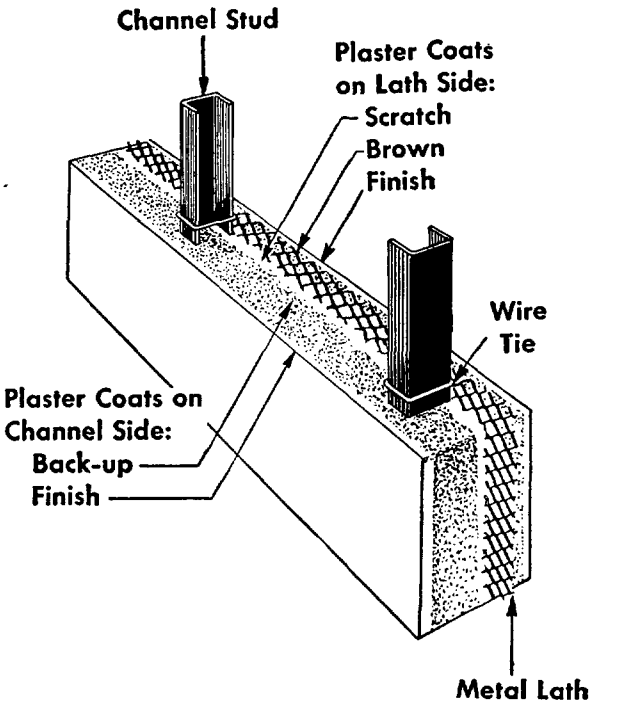

Metal Lath and Plaster Solid Partition with Channel Studs

TABLE IV

SIZES OF COLD-ROLLED CHANNEL STUDS AND THICKNESSES OF PARTITIONS FOR VARIOUS HEIGHTS OF METAL LATH SOLID PARTITIONS

Height Not to Exceed	Thickness of Partition	Size and Weight of Channels (per 1000 feet)
8 ft.-6 in.	1½"	¾" 300 lb.
12 ft.	2"	¾" 300 lb.
14 ft.	2¼"	¾" 300 lb.
16 ft.	2½"	¾" 300 lb.
18 ft.	2¾"	1½" 475 lb.
20 ft.	3"	1½" 475 lb.
†24 ft.	3¼"	1½" 475 lb.

note: No limitations on length of these partitions for heights under 10'. Length, between columns, walls or other vertical structural members, shall not be greater than two times partition height when latter is 10' or more, nor greater than 1½ times height when latter exceeds 14'; nor greater than the height when it is 20' or more. For lengths exceeding these, thickness shall be increased 20%.

†For heights over 20' furnish horizontal cold-rolled channels or rod stiffeners on channel side of partition every 6' vertically.

Heights over 24' shall be proportionately thicker.

A1.2.10—Electrical Installation—Electrical outlets shall not exceed 1½" in depth for 2" solid partitions. The back of outlet and switch boxes shall be covered with Metal Lath.

note: *To minimize sound conduction it is recommended that telephone boxes, etc., in adjoining hotel rooms, apartments, etc., be installed on outside walls of the room or on non-communicating partitions.*

METAL STUD HOLLOW PARTITIONS

(To be used in conjunction with General Specification No. 1, page 5)

note: *The studs in this specification are of non-bearing type. For bearing metal stud partitions with Metal Lath and plaster, all requirements for the lath, its attachment, and the plastering, remain the same. The only variation is the type of metal bearing stud and the method of erection.*

note: *Consult manufacturers' catalogs for additional information on prefabricated metal studs and metal base.*

B1.2.1—Studs for non-bearing hollow partitions shall be a single row of shop-fabricated or pre-assembled studs; a single row of cold-rolled channels or other structural shapes with width equal to that of the finished partition (less the thickness of lath and plaster on each side); or a double row of parallel ¾" cold-rolled channels, or equivalent, with suitable spacers or braces.

B1.2.2—Minimum size of prefabricated metal studs for non-bearing hollow partitions shall be determined by the height of the partition in accordance with Table V. The maximum height for non-bearing hollow partitions constructed with ¾" cold-rolled channel studs shall be determined by the thickness of the partition in accordance with Table V. Spacing of studs shall be determined by the type and weight of Metal Lath used, and shall be in accordance with Table I.

B1.2.3—PREFABRICATED STUDS

B1.2.3.1—Runner tracks shall be aligned accurately to the partition layout at both floor and ceiling. They shall be secured to concrete slabs with ½" concrete stub nails at 2' intervals, or wired to the runner or furring channels of ceilings.

B1.2.3.2—Each stud shall be secured to runner tracks with two attachment shoes at both top and bottom, each wired or crimped to the stud.

B1.2.3.3—Other methods of fastening studs to floor and ceiling will be permitted provided they have equivalent strength and are approved by the architect.

B1.2.3.4—Door openings shall have a stud continuous from floor to ceiling fastened to each side of the buck. Such studs shall be wire-tied or bolted in a secure manner to metal bucks. Where wood bucks are used, two 8d nails shall be driven in pairs at intervals of 2', beginning 9" above the floor, into the wood buck and clinched over the studs to hold them securely.

B1.2.4—CHANNEL STUDS

B1.2.4.1—Channel studs shall be securely fastened to the soffit of the roof or floor above, or to the joists, or to a suspended ceiling. Channels, pencil rods, cornerite, or special types of ceiling runners may be used provided they hold the top of the studs securely in line.

B1.2.4.2—Ends of channel studs may be bent and nailed directly to the floor or to a wood runner, or stud ends may be set in holes cut in the top of concrete floors or into special types of metal floor runners.

Metal base shall be installed according to the manufacturers' specifications.

B1.2.4.3—Where two-piece studs are used, they shall be spliced within 2' of the ceiling by lapping not less than 8", with flanges interlocked and securely wired near each end of splice. Single-piece studs shall be of such length that they will not bow when erected.

B1.2.4.4—Where double channels are used to form partitions, spacers, braces or separator clips shall be provided between every pair and shall be well secured to maintain alignment. They shall be of substantial design and be spaced not more than 4' apart, vertically. (No spacers required for shop fabricated studs or extra-wide channel studs.)

note: *Regarding installation of bucks, see section 1.4.*

B1.2.4.5—Door openings shall have two channel studs (four studs required per opening) continuous from floor to ceiling fastened to each side of the buck. Channels shall be so spaced that Metal Lath can be wired-tied thereto. Channel studs shall be wire-tied to metal bucks in a secure manner. Where wood bucks are used, channel studs shall be nailed or screwed to buck at 2' intervals; or two 8d nails shall be driven in pairs at intervals of 2', beginning 9" above floor, into the wood buck, and the channel studs at each side securely wire-tied to said nails.

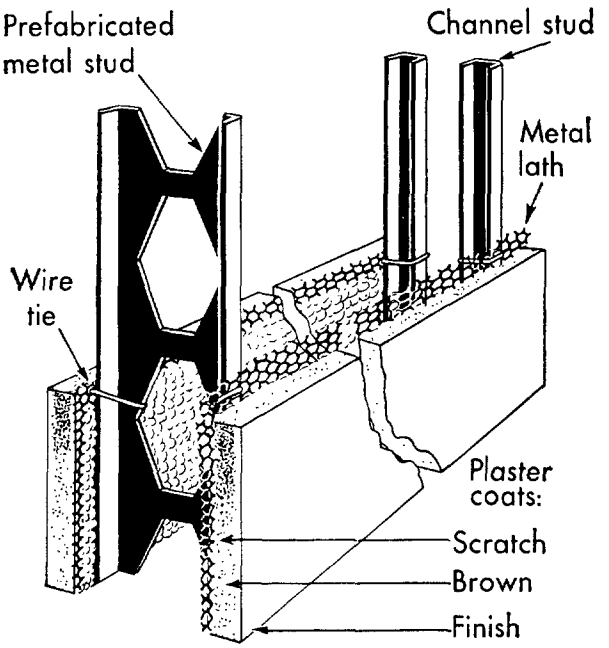

Metal Lath and Plaster Hollow Partition with Metal Studs

TABLE V

HEIGHTS OF METAL LATH AND METAL STUD HOLLOW (Non-Bearing) PARTITIONS

Type of Partition	Face-to-Face Partition (A) Thickness (In Inches)	Maximum Height (B) (In Feet) C to C Spacing of Studs		
		24"	19"	16"
Single row of 2½" Prefabricated Studs	4	9'	14'	15'
Single row of 3¼" Prefabricated Studs	4¾	13'	18'	21'
Single row of 4" Prefabricated Studs	5½	16'	20'	22'
Single row of 6" Prefabricated Studs	7½	20'	24'	26'
Double row of ¾" Channels (Braced)	3			14'
Double row of ¾" Channels (Braced)	4			16'
Double row of ¾" Channels (Braced)	5			20'

(A) Plaster thickness ¾" from stud face or ⅝ from face of Metal Lath; for ⅜" Rib Metal Lath, with ribs against studs, thickness increases ½".

(B) For lengths not exceeding 1½ times height. For lengths exceeding this, reduce height 20%.

STIFFENERS AND GROUNDS—Prefabricated or Channel Studs

B1.2.5—A ¾" cold-rolled channel reinforcement shall be placed inside the partition and 6" to 8" above the door opening. It shall extend continuously past the studs alongside the buck and to the next studs beyond the opening. This channel shall be saddle-tied to each vertical stud it crosses.

B1.2.6—Partitions more than 10' long or 9' high shall be stiffened with ¾" cold-rolled channels placed horizontally and not more than 6' apart vertically. Stiffeners shall be permanently wired on the inside of the partition. For unsupported height of 20' or more, horizontal stiffeners shall be 1½" cold-rolled channels.

B1.2.7—Wood grounds and wood nailing strips shall be set true to the plaster line and wired to studs, or nailed to blocks which shall be securely wired or clamped to studs.

supplementary specification no. 1-C

SOUND-INSULATING DOUBLE PARTITIONS

(To be used in conjunction with Specification No. 1, page 5)

C1.2.1—Studs for Metal Lath double partitions shall be a double row of parallel cold-rolled channels or a double row of staggered prefabricated studs. Minimum size of studs shall be determined by the height of the partition in accordance with Table VI-A or VI-B.

Spacing of studs shall be determined by the type and weight of metal lath used, and shall be in accordance with Table I.

C1.2.2—No spacers or cross ties between the partition panels shall be used.

C1.2.2.1—(Alternate to Section C1.2.2 for double partition with limited cross ties for bracing, providing a sound loss of 45.7 decibels.)

Cross ties shall be installed only at 3′ intervals at mid-height along the partition length. The type of cross tie shall be dependent on partition width.

(For additional information, write for Technical Bulletin No. 13.)

C1.2.3—Channel studs shall be securely fastened to the soffit of the roof or floor above, or to the joists, or to a suspended ceiling. Channels, pencil rods, cornerite, or special types of ceiling runners may be used provided they hold the top of the studs securely in line.

C1.2.3.1—(Alternate to Subsection C1.2.3.) For additional sound insulation, ceiling runner may be insulated from ceiling slab in manner similar to that described for floor runner in Subsection C1.2.4.1.

C1.2.4—Ends of channel studs may be bent and nailed directly to the floor or to a wood runner, or stud ends may be set in holes cut in the top of concrete floors or into special types of metal floor runners.

Metal base shall be installed according to the manufacturer's specifications.

C1.2.4.1—(Alternate to Subsection C1.2.4.) Studs shall be erected by inserting ends into floor and ceiling runners.

Floor runners shall be laid over 1″ thick board or 1″ thick machinery cork or other material having approximately equal resilient and load-carrying properties.

Such board or cork, etc., shall be as wide as the finished thickness of the partition and shall be well-secured to the floor slab. Expansion drives at 36″ centers, or masonry nails which shall penetrate slab at least ⅝″ and be spaced not to exceed 12″ on centers, or combinations of the two, shall be used.

Attachments used for securing cork insulation to slab may be used simultaneously for securing and positioning floor runner, or separate attachments of the same type may be used for this purpose.

C1.2.5—Where two-piece studs are used, they shall be spliced within 2′ of the ceiling by lapping not less than 8″, with flanges interlocked and securely wired near each end of splice. Single-piece studs shall be of such length that they will not bow when erected.

C1.2.6—A ¾″ cold-rolled channel, or other member of at least equal rigidity shall be placed horizontally on the inside of the partition and be securely wired to each of the channels or studs forming one face of the partition, and a similar channel or reinforcement shall be used to align and stiffen the channels or studs on the other face. Such horizontal channels shall remain permanently in the partition and shall be so located that no part of them touches either the channels, the lath, or the plaster keys of the other half of the partition. One such brace shall be applied every 4′ in height of the partition, and at least two shall be provided for partitions 9½′ high, or over.

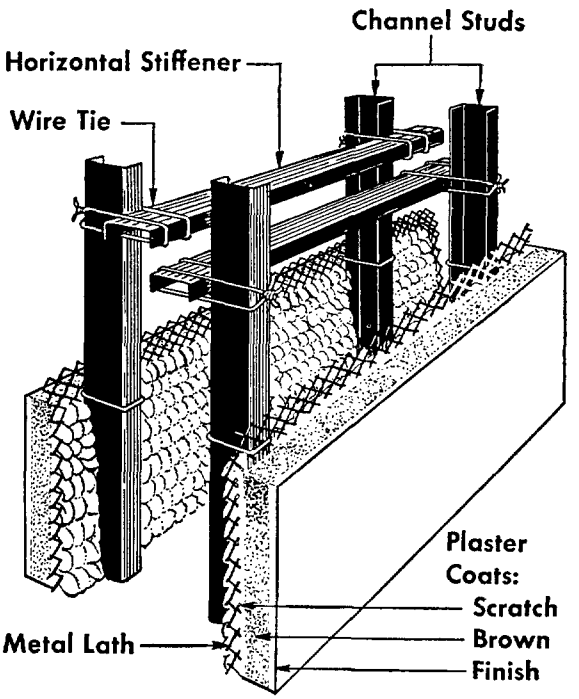

Metal Lath and Plaster Sound-Insulating Double Partition

In addition to the horizontal bracing specified in the preceding paragraph, the following shall be provided for all partitions of this type more than 9½′ high when more than 10′ long.

At 10′ intervals an additional channel stud or other vertical stiffener shall be supplied on the inside of the partition directly opposite the regular stud. It shall be installed so that the horizontal stiffener comes between it and the regular stud and at each of these points the two studs and horizontal stiffener shall be tied together. This is to be done independently on each half or face of the partition, but no part of the construction shall run across or be tied to the other portion of the partition, the additional studs to be staggered for opposite faces of the partition.

note: *Regarding installation of bucks, see Section 1.4. For special sound insulation of bucks, see Subsections 1.4.5 and 1.4.6.*

C1.2.7—Door openings shall have two channel studs (four studs required per opening) continuous from floor to ceiling fastened to each side of the buck. Channels shall be so spaced that metal lath can be wire-tied thereto. Channel studs shall be wire-tied to metal bucks in a secure manner. Where wood bucks are used, channel studs shall be nailed or screwed to bucks at 2′ intervals; or two 8d nails shall be driven in pairs at intervals of 2′, beginning 9″ above floor, into the wood buck, and the channel studs at each side securely wire-tied to said nails.

C1.2.8—A ¾″ cold-rolled channel reinforcement shall be placed inside the partition and 6″ to 8″ above the door opening. It shall extend continuously past the studs alongside the buck and to next studs beyond the opening. This channel shall be saddle-tied to each vertical stud it crosses.

C1.2.9—In erecting studding no part of same shall be wired or otherwise attached or permitted to make contact with piping, conduit, heat ducts, etc., within the partition.

supplementary specification no. 1-D

VERTICAL FURRING
(Walls, Columns and other Enclosures)

(To be used in conjunction with Specification No. 1, page 5)

D1.2.1—Size of channel or prefabricated studs shall be determined according to the height of the vertical furring as set forth in Tables VI-A and VI-B.

Spacing of studs shall be determined by the type and weight of metal lath used, and shall be in accordance with Table I.

D1.2.2—Channel studs shall be securely fastended to the soffit of the roof or floor above, or to the joists, or to a suspended ceiling. Channels, pencil rods, cornerite, or special types of ceiling runners may be used provided they hold the top of the studs securely in line.

D1.2.3—Ends of channel studs may be bent and nailed directly to the floor or to a wood runner, or stud ends may be set in holes cut in the top of concrete floors or into special types of metal floor runners.

note: *Consult manufacturers' catalogs for additional information on metal base.*

D1.2.4—Where two-piece studs are used, they shall be spliced within 2′ of the ceiling by lapping not less than 8″, with flanges interlocked and securely wired near each end of splice. Single-piece studs shall be of such length that they will not bow when erected.

D1.2.5—Attachments for braced furring shall consist of nails driven securely into concrete or into masonry joints, or short pieces of ¾″ cold-rolled channels used as anchors driven into masonry joints. They shall be spaced not to exceed 2′ on centers, horizontally, and in accordance with the spacing of horizontal channels, vertically, and shall project a proper distance from the face of the wall to permit ties to be made.

Special devices which are the equivalent of the nail or channel attachments may be used in lieu thereof.

D1.2.6—Horizontal members for braced furring shall be not less than ¾″ cold-rolled channels. They shall be spaced not to exceed 4′-6″ on centers with the lower and upper channels not more than 6″ from the floor and ceiling respectively, and not less than ¼″ from the face of the wall. They shall be securely tied to attachments with three loops of No. 18 gage galvanized annealed wire, or equivalent devices.

Horizontal members for free-standing furring shall be not less than ¾″ cold-rolled channels. They shall be spaced not to exceed 4′-6″ on centers with the lower and upper channels not more than 6″ from the floor and ceiling, respectively.

note: *If vertical studs are securely anchored to floor and ceiling, horizontal members specified for use within 6″ of such floor and ceiling on either braced or free-standing furring, may be omitted.*

Special devices, securely attached to concrete or masonry walls, in lieu of horizontal members, may be used for support of vertical members.

TABLES VI-A AND VI-B

HEIGHTS OF VERTICAL FURRING
(Channel and Prefabricated studs)

TABLE VI-A

Free-Standing Furring

Recommended Maximum Unsupported Height, "A" (Based on 16" Spacings)

Stud	Height
¾″ Channel	8′-0″
1½″ Channel	10′-0″
2″ Channel	11′-0″
2½″ Prefabricated	12′-0″
3¼″ Prefabricated	17′-0″

Horizontal Stiffeners, spaced same as Bracing in Table VI-B, are recommended for all Free-Standing Furring. For furring more than 16″ o. c., use one-half these spacings, with minimum of 3′-6″.

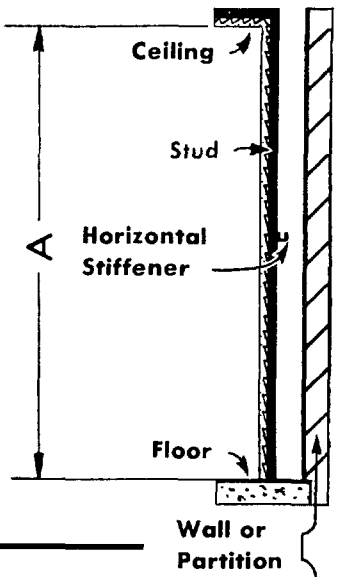

When overall height of furring exceeds Height A in table above, install Horizontal Bracing as given in table below:

TABLE VI-B

Braced Furring

Recommended Maximum Distance, "B" Between Horizontal Bracing (Based on 16" Spacings)

Stud	Height
¾″ Channel	6′-0″
1½″ Channel	8′-0″
2″ Channel	9′-0″
2½″ Prefabricated	10′-0″
3¼″ Prefabricated	14′-0″

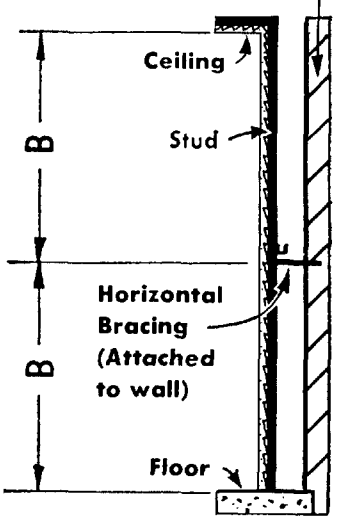

D1.2.7—Vertical members for braced furring shall be saddle-tied to horizontal members with three loops of No. 18 gage galvanized annealed wire, or equivalent devices, at each crossing, and securely anchored to the floor and ceiling construction.

Where furring is a considerable distance from the face of the wall, channel braces to the wall shall be provided approximately 2′ on centers.

Vertical members for free-standing furring shall be securely anchored to the floor and ceiling construction only.

D1.2.8—Wood grounds and wood nailing strips shall be set true to the plaster line and wired to studs, or nailed to blocks which shall be securely wired or clamped to studs.

2.1—MATERIALS

2.1.1—Metal Lath shall be Diamond Mesh weighing not less than 3.4 lbs. per square yard, Flat Rib Lath weighing not less than 2.75 lbs. per square yard, 3/8" Rib Lath weighing not less than 3.4 lbs. per square yard, or Rod-Ribbed Metal Lath of equal rigidity and weight, or Sheet Lath.

2.1.2—Metal runners shall be perforated, slotted, or formed of expanded metal. Legs of angle runners shall be not less than 1/2" by 2", formed of not less than 28 ga. steel.

2.1.3—Wood floor runners shall be well dried, prime painted and a full 2" wide by 1 5/8" high. For one-hour fire resistive partitions, wood runners shall be treated with a fire retardant material approved by the architect.

2.1.4—Metal base and metal clips shall be approved by the architect. *(Note: See catalogs of metal lath manufacturers for various types of metal base assemblies.)*

2.1.5—Tie Wire shall be not less than No. 18 gage galvanized annealed wire.

2.2—METAL LATHING

2.2.1—Metal base clips or wood floor runners shall be attached to the floors to locate the partitions accurately according to plan drawings. Fastenings suitable to floor materials shall be used.

2.2.2—Ceiling runners shall be located so that the Metal Lath will be in the center of the partitions and plumb. Runners shall be fastened to concrete ceilings with stub nails, expansion drives or other equivalent means. Runners shall be fastened to Metal Lath ceilings with wire ties at approximately 12" spacings.

2.2.3—Metal Lath shall be erected with the long dimension of the sheet vertical. Sheets shall be secured first to ceiling runners with wire ties at 8" o.c. and either attached to floor runners, or metal base clips, or suitably anchored in a grouted metal base assembly. A wire tie shall be placed where sheets lap at runners.

2.2.4—Diamond Mesh Lath shall be lapped at sides not less than 1/2". Rib Metal Lath and Sheet Lath shall be lapped by nesting outside ribs or selvage. Vertical laps shall be tied at intervals not exceeding 12".

2.2.5—Where studless partitions intersect walls to be plastered, Cornerite shall be used to reinforce the juncture. It shall be tied at each edge, not at the angle, to the intersecting lath at 6" vertical spacings. When Diamond Mesh Lath is used in the studless partition, Cornerite can be omitted by returning the partition lath and fastening it to the intersecting surface. L-type runner shall be fastened to abutting walls which are not to be plastered, and the Metal Lath wired to the runner so that the complete assembly is embedded in the plastered partition.

2.3—TEMPORARY BRACING

2.3.1—Partitions shall be temporarily braced until such time as the scratch and brown coats of plaster on the unbraced side have been applied and are set.

2.4—BUCKS

2.4.1—A channel stud shall be wire tied to anchor clips on each side of metal door bucks or wire tied to pairs of 8d nails driven into wood bucks, and so placed as to provide space for tying Metal Lath to the stud. These studs may be continuous from floor to ceiling or they may be anchored to and extend only from the upper portion of the buck to the ceiling. (Alternate: If desired, studs need not extend to ceiling, or may be omitted if other means of attaching lath is provided and buck is braced.)

2.5—PLASTERING

2.5.1—Plastering shall be five-coat work. First apply scratch coat on side opposite temporary braces (if used) and allow it to set and partially dry. Then apply brown coat to unbraced side, and when it has set firm remove the temporary bracing. Next apply brown coat to previously braced side, bringing it out to make overall partition thickness 2" when finish coats are applied to both sides.

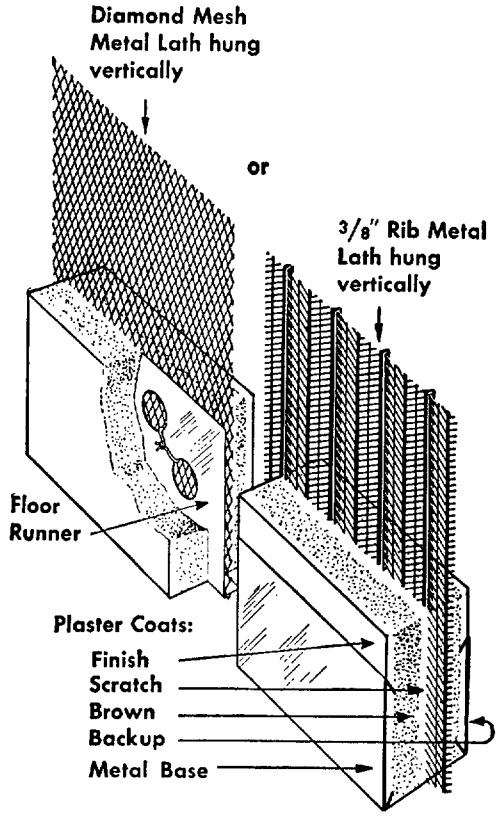

Studless Solid Metal Lath and Plaster Partition with Diamond Mesh or 3/8" Rib Lath
(Method of attachment to floor not detailed)
Optimum height—8'-4" or less
Maximum height—10'-0"

2.6—METAL BASE SCREED, PICTURE MOLD, INTEGRAL METAL TRIM, CORNER BEAD

2.6.1—Metal base screed, picture mold, or integral metal trim shall be wired to Metal Lath through holes provided in the screed, mold, or trim, and, where necessary, shimmed-out to line.

2.6.2—All external angles to be plastered shall be protected with galvanized expanded wing or perforated corner beads. Corner bead shall be attached securely in such manner as to assure proper alignment during application of plaster, and for proper plaster thickness.

2.7—ELECTRICAL CONDUIT, SWITCH BOXES, ETC.

2.7.1—Electrical Installation—Electrical outlets shall not exceed 1 1/2" in depth for 2" solid partitions. The back of outlet and switch boxes shall be covered with Metal Lath.

note: *To minimize sound conduction it is recommended that telephone boxes, etc., in adjoining hotel rooms, apartments, etc., be installed on outside walls of the room or on non-communicating partitions.*

General Specifications No. 3

Metal Lath Attached Directly to Wood Supports (Studs and Joists)

3.1—WEIGHTS OF METAL LATH

3.1.1—All Metal Lath shall be specified by weight per square yard in accordance with the spacing of supports as given in Table I (on page 4).

3.2—ERECTION OF METAL LATH

3.2.1—Metal Lath shall be applied with the long dimension of the sheet across the supports; Rib Metal Lath with the ribs against the supports.

3.2.2—Diamond Mesh Metal Lath shall be lapped at sides not less than ½", and at ends not less than 1". End laps of sheets should generally occur only over supports; if between, ends of sheets shall be laced or adequately tied with No. 18 gage galvanized annealed wire.

3.2.3—Rib Metal Lath and Sheet Lath shall be lapped at sides by nesting outside ribs or selvage. Rib Metal Lath shall be lapped 1" at ends and Sheet Lath shall be lapped 1" at ends or nested.

3.2.4—Diamond Mesh Metal Lath shall be first applied to the ceilings, and the sheets carried down 6" on to the walls and partitions. If Metal Lath is not used on the ceilings, the lathing may start at the top of the wall and be bent and carried up 6" on to the ceiling joists so that no joints occur at juncture of ceiling and walls. On walls, Diamond Mesh Metal Lath shall be started one stud away from corner and be bent into the corner and carried on to the abutting wall, so as to avoid a joint at juncture of walls, provided that where Rib Metal Lath or Sheet Lath is used on ceilings or walls, it shall be butted into all corners and Cornerite shall be applied over abutting lath in such angles and shall be wired at 6" intervals along each edge in all corners. (Cornerite shall not be fastened at its corner, but only along each edge. Cornerite is not required for Diamond Mesh Metal Lath.)

3.2.5—Nails and staples shall be spaced not to exceed 6" on centers. A tie, nail, or other attachment shall always be placed where sides of sheets lap at supports.

3.2.6 etc.—

Insert here applicable supplementary specification as follows:

Metal Lath Nailed to Wood Studs, Specification No. 3-A (below).
Metal Lath Nailed to Wood Joists, Specification No. 3-B (below).
Metal Lath Tied-and-Nailed to Wood Joists, Specification No. 3-C (page 12).

3.3—ALTERNATE METHODS

3.3.1—Other methods of attachment which afford equal carrying capacity may be used.

supplementary specification no. 3-A — METAL LATH NAILED TO WOOD STUDS

(To be used in conjunction with Specification No. 3 above)

A3.2.6—Diamond Mesh Metal Lath or Flat Rib Metal Lath shall be attached to vertical wood supports with not less than 4d common nails, or 1" roofing nails with 7/16" diameter heads, driven to a penetration of at least ¾", or 1" No. 14 gage wire staples driven home but without crushing the lath strands. Common nails, when used, shall be bent over to engage at least three strands of Diamond Mesh Metal Lath, or shall be bent over the ribs of Flat Rib Metal Lath. Roofing nails shall be so driven as to engage at least two strands of Diamond Mesh Metal Lath, or shall be driven through ribs of Flat Rib Metal Lath. Staples shall be so driven as to engage at least two strands of Diamond Mesh Metal Lath, or shall be driven over the ribs of Flat Rib Metal Lath.

⅜" Rib Metal Lath, and Sheet Lath, shall be attached to vertical wood supports with nails or staples ⅜" longer than respectively required for other laths as above, unless attachment is through rib, in which event nails or staples shall be of such length as to provide at least ¾" penetration in the vertical wood supports.

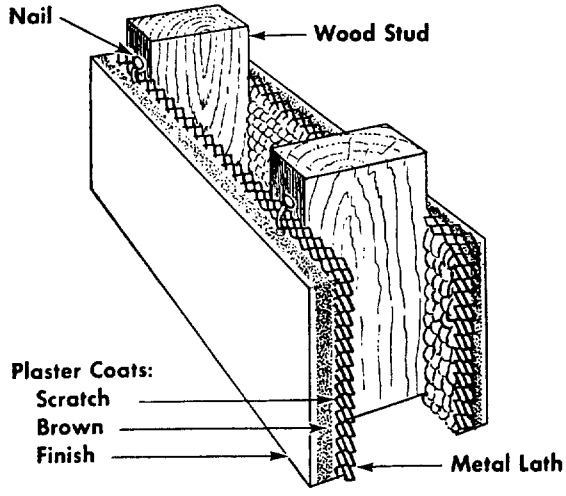

Metal Lath and Plaster on Wood Studs

supplementary specification no. 3-B — METAL LATH NAILED TO WOOD JOISTS (Contact Ceiling)

(To be used in conjunction with Specification No. 3 above)

B3.2.6—Diamond Mesh Metal Lath and Flat Rib Metal Lath shall be attached to horizontal wood supports with 1½", No. 11 gage, barbed roofing nails with 7/16" heads, spaced not to exceed 6" on centers.

⅜" Rib Metal Lath, and Sheet Lath, shall be attached to horizontal wood supports with nails or staples ⅜" longer than respectively required for other laths as above, unless attachment is through rib, in which event nails or staples shall be of such length as to provide at least 1⅜" penetration in the horizontal wood supports.

Metal Lath and Plaster Ceiling Directly Attached to the Underside of Wood Joists

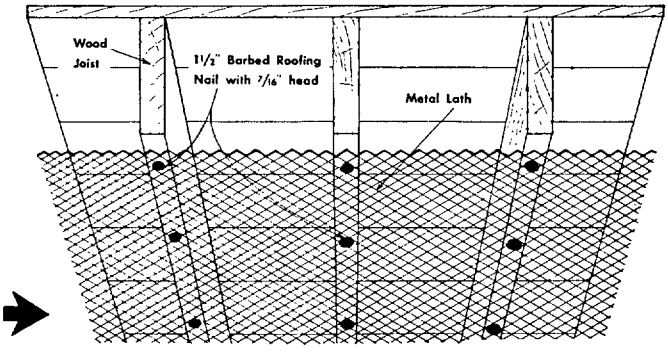

supplementary specification no. 3-C

METAL LATH TIED-AND-NAILED TO WOOD JOISTS (Contact Ceiling)

(To be used in conjunction with Specification No. 3, page 11)

note: *This construction should be used where the required holding power of nails is not obtainable, and in structures subject to greater-than-ordinary vibration, such as (1) School classrooms, gymnasiums, auditoriums, and other places of public assembly; (2) Buildings located in areas subject to severe earthquakes, or near oil well drilling or quarrying operations, etc.*

C3.2.6—Diamond Mesh Metal Lath and Flat Rib Metal Lath shall be attached to horizontal wood supports with 1½", No. 11 gage, barbed roofing nails with 7/16" heads spaced not to exceed 6" on centers.

⅜" Rib Metal Lath, and Sheet Lath, shall be attached to horizontal wood supports with nails or staples ⅜" longer than respectively required for other laths as above, unless attachment is through rib, in which event nails or staples shall be of such length as to provide at least 1⅜" penetration in the horizontal wood supports.

C3.2.7—Supplemental Provisions for Tying: 16d common nails shall be driven in a horizontal position clear through joists at least 2" above the bottom edge of joists. Nails shall be spaced 24" or 27" on centers along the sides of alternate joists, the spacing depending on the width of Metal Lath sheet used, and shall be so placed that when the sheets of Metal Lath are in position the nails will be not more than 3" back from the edge of each sheet. In place of 16d common nails driven clear through joists, two 8d common nails may be used, one on each side of joist, driven diagonally downward to a penetration of at least 1½" from a point not less than 2" above the bottom edge of joists.

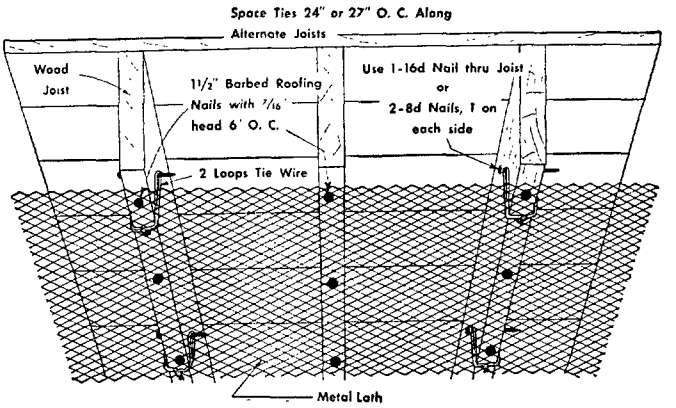

Metal Lath and Plaster Ceiling Tied-and-Nailed to Wood Joists

Metal Lath shall then be secured to each nail with not less than 2 loops of No. 18 gage galvanized annealed tie wire bent U-shaped, pushed up through the lath and the free ends given not less than three twists around the projecting point and head of the nail (or around the projecting head of each 8d nail). As an alternate method, one loop of No. 18 gage galvanized annealed wire shall be slipped over the nail on each side of the joist and the ends of this loop tied below lath. This tying shall preferably be done progressively as the sheets of Metal Lath are nailed on.

General Specifications No. 4 — Metal Lath Attached to Noncombustible Ceiling Supports (Contact Ceiling)

4.1—WEIGHTS OF METAL LATH

4.1.1—All Metal Lath shall be specified by weight per square yard in accordance with the spacing of supports as given in Table I (on page 4).

4.2—ERECTION OF METAL LATH

4.2.1—Metal Lath shall be applied with the long dimension of the sheet across supports; Rib Metal Lath with the ribs against supports.

4.2.2—Diamond Mesh Metal Lath shall be lapped at sides not less than ½", and at ends not less than 1". End laps of sheets should generally occur only over supports; if between, ends of sheets shall be laced or adequately tied with No. 18 gage galvanized annealed wire.

4.2.3—Rib Metal Lath and Sheet Lath shall be lapped at sides by nesting outside ribs or selvage. Rib Metal Lath shall be lapped 1" at ends and Sheet Lath shall be lapped 1" at ends or nested.

4.2.4—Diamond Mesh Metal Lath shall be first applied to the ceilings and the sheets carried down 6" on to the walls and partitions, if walls and partitions are to be plastered, so that no joints occur at juncture of ceiling and walls. Where Rib Metal Lath or Sheet Lath is used on ceilings, and walls and partitions are to be plastered, it shall be butted into all corners and Cornerite shall be applied over abutting lath in such angles and shall be wired at 6" intervals along each edge. (Cornerite shall not be fastened at its corner, but only along each edge. Cornerite is not required for Diamond Mesh Metal Lath carried around the corner.)

4.2.5 etc.—

Insert here applicable supplementary specification as follows:

Metal Lath Attached to Steel Joists, Specification No. 4-A (page 13).

Metal Lath Attached to Concrete Joists, Specification No. 4-B (page 13).

supplementary specification no. 4-A — METAL LATH ATTACHED TO STEEL JOISTS (Contact Ceiling)

(To be used in conjunction with Specification No. 4, page 12)

A4.2.5—Metal Lath shall be securely attached to the underside of steel joists by one loop of No. 16 gage galvanized wire or 2 loops of No. 18 gage galvanized annealed wire. Wire shall be twisted beneath the Metal Lath as for tie wire. Ties shall be spaced at not to exceed 6" intervals. Other approved attachments may be used if of equivalent strength. Ties shall be placed where sides of sheets lap at supports and at side laps of sheets between supports.

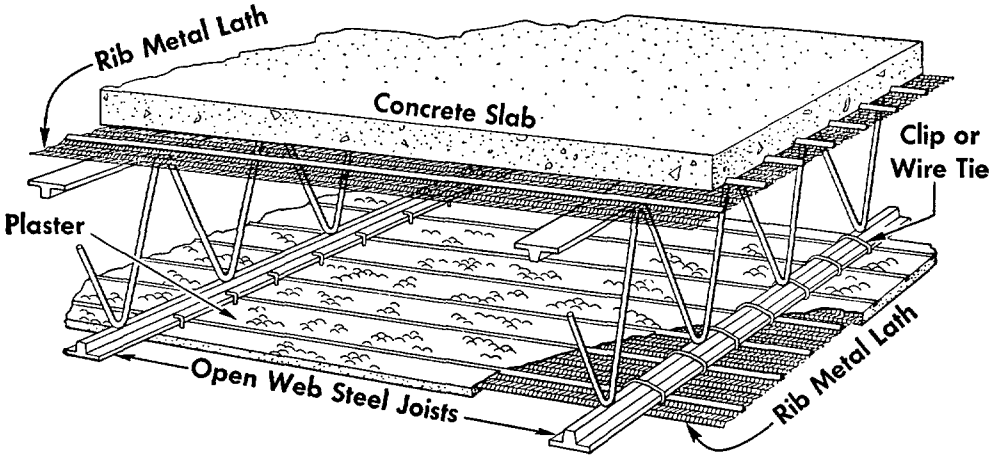

Metal Lath and Plaster Ceiling Attached Directly to the Underside of Steel Joists

supplementary specification no. 4-B — METAL LATH ATTACHED TO CONCRETE JOISTS (Contact Ceiling)

(To be used in conjunction with Specification No. 4, page 12)

B4.2.5—Hangers for attaching Metal Lath directly to the underside of concrete joists in 20" or 30" wide form construction shall consist of hairpin, hook or loop hangers or other inserts. Hangers shall be provided with a loop or other deformation to positively enter the concrete, or be secured to the reinforcing steel.

Hangers shall be of not less than No. 14 gage galvanized wire when twisted as for tie wire, and not less than No. 10 gage galvanized wire when struck over to support the lath. Hangers shall be spaced at not to exceed 5" intervals along bottom of joists.

For 30" wide form construction, there shall also be placed a No. 12 gage galvanized wire hanger through the center of the top surface of each row of forms, and spaced at not to exceed 36" centers longitudinally. There shall be a loop in each hanger to engage the concrete.

Other approved attachments or inserts of equivalent strength may be used.

B4.2.6—In 30" wide form construction, ¾" cold-rolled channels weighing not less than 300 lbs. per 1000 lineal feet shall be erected running parallel to and between the rows of joists at approximately 36" centers, or mid-point. Hangers shall be spaced not to exceed 36" along the channels.

B4.2.7—In 20" wide form construction, the Metal Lath shall be securely attached to the underside of the concrete joists by twisting the No. 14 gage wire hangers as for tie wire, or by clinching of other types of hangers. A tie shall be placed at side laps of sheets between supports.

B4.2.8—In 30" wide form construction, the Metal Lath shall be attached to the concrete joists as in 20" wide form construction and shall also be tied to the channels with No. 18 gage galvanized annealed wire at not to exceed 6" intervals. A tie shall be placed at side laps of sheets between supports.

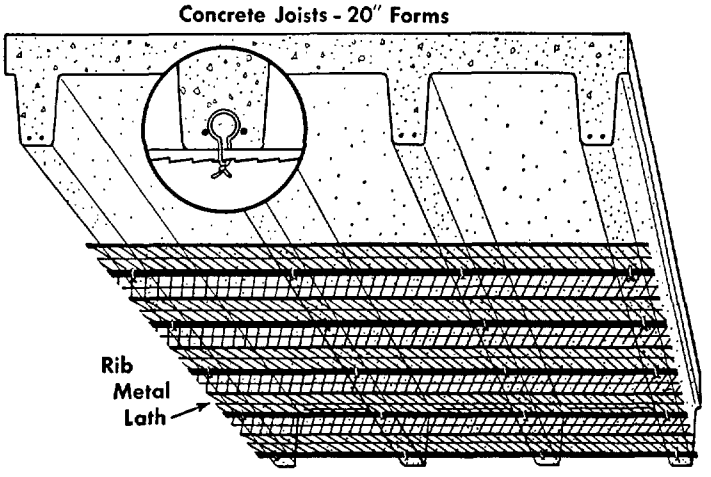

Metal Lath and Plaster Ceiling Attached Directly to the Underside of Concrete Joists

SGP 0003115

5.1—WEIGHTS OF METAL LATH

5.1.1—All Metal Lath shall be specified by weight per square yard in accordance with the spacing of supports as given in Table I (on page 4).

5.2—ERECTION OF FURRING

5.2.1—Size—Furring members shall be ⅜" pencil rods or ¾" cold-rolled channels, spaced in accordance with the provisions of Table VII (on page 16). When furring members are spliced, the ends shall be overlapped not less than 8" (with flanges of channels interlocked) and securely tied near each end of the splice with two loops of No. 16 gage galvanized wire.

5.2.2 etc.—

Insert here applicable supplementary specification as follows:

Furred Metal Lath Ceiling on Steel Joists, Specification No. 5-A (below).

Furred Metal Lath Ceiling on Concrete Joists, Specification No. 5-B (below).

Furred Metal Lath Ceiling on Wood Joists, Specification No. 5-C (page 15).

5.3—ERECTION OF METAL LATH

5.3.1—Metal Lath shall be applied with the long dimension of the sheet across supports; Rib Metal Lath with the ribs against supports.

5.3.2—Metal Lath shall be attached to the steel furring members by No. 18 gage galvanized annealed wire ties spaced at not to exceed 6" intervals. Ties shall be placed where sides of sheets lap at supports and at side laps of sheets between supports.

5.3.3—Diamond Mesh Metal Lath shall be lapped not less than ½" at sides; Rib Metal Lath and Sheet Lath shall be lapped at sides by nesting outside ribs or selvage. All Metal Lath shall be lapped 1" at ends or nested.

5.3.4—End laps of sheets should generally occur only over supports; if between, ends of sheets shall be laced or adequately tied together with No. 18 gage galvanized annealed tie wire.

5.3.5—Diamond Mesh Metal Lath shall be first applied to the ceiling and the sheets carried down 6" on to the walls and partitions so that no joints occur at juncture of ceiling and walls. Where Rib Metal Lath or Sheet Lath is used on ceilings, and walls and partitions are to be plastered, it shall be butted into all corners and Cornerite shall be applied over abutting lath in such angles and shall be wired at 6" intervals along each edge. (Cornerite shall not be fastened at its corner, but only along each edge. Cornerite is not required for Diamond Mesh Metal Lath carried around the corner.)

supplementary specification no. 5-A — FURRED METAL LATH CEILING ON STEEL JOISTS

(To be used in conjunction with Specification No. 5 above)

A5.2.2—Furring members shall be securely saddle-tied to the underside of steel joists with No. 16 gage galvanized wire or with other approved attachments of equivalent strength.

Metal Lath and Plaster Furred Ceiling on the Underside of Steel Joists

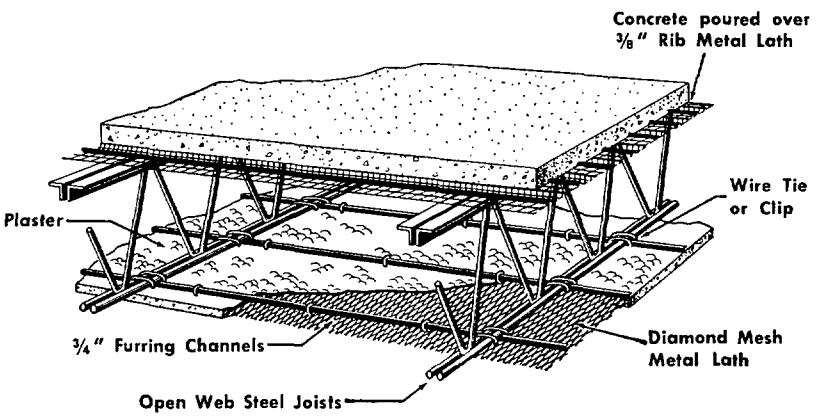

supplementary specification no. 5-B — FURRED METAL LATH CEILING ON CONCRETE JOISTS

(To be used in conjunction with Specification No. 5 above)

B5.2.2—Hangers—In 20" or 30" wide form construction, hangers for supporting furring channels or pencil rods against the bottom of concrete joists shall consist of No. 10 gage galvanized wire.

In 20" wide form construction, hangers shall be placed through the center of the top surface of each row of forms and shall be spaced at not to exceed 36" centers longitudinally. In 30" wide form construction, hangers shall be placed at the center of the top surface in every other row of forms and shall be spaced at not to exceed 36" centers longitudinally. In the alternate rows in 30" wide form construction, there shall also be placed two No. 10 gage galvanized wire hangers at not to exceed 36" on centers longitudinally in the top surface of the forms approximately 2" from each side.

supplementary specification no. 5-B (continued)

All hangers shall be provided with a loop or other deformation to positively enter the concrete, or be secured to the reinforcing steel.

All hangers shall be of such length that the lower end of hangers may be saddle-tied or wrapped around the runners so as to develop the full strength of the hangers.

Other approved attachments or inserts may be used if of equivalent strength.

B5.2.3—Channels—¾" cold-rolled channels, weighing not less than 300 lbs. per 1000 lineal feet, shall be erected running parallel to and between the rows of joists.

Cross furring shall run transversely to the joists and runners, and shall consist of ⅜" round steel pencil rods at not to exceed 19" on centers.

The cross furring shall be securely saddle-tied to the runner channels by not less than two loops of No. 16 gage galvanized wire at each crossing or by equivalent clips or attachments.

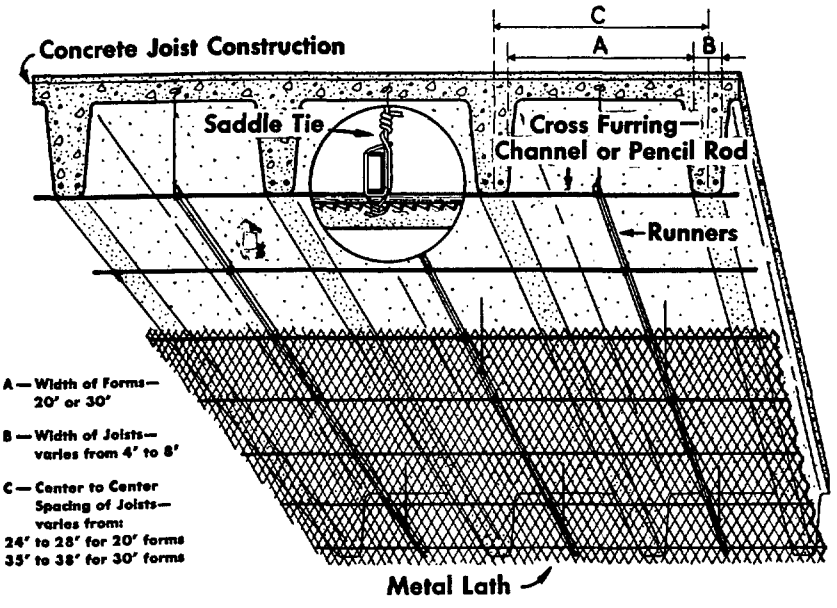

Metal Lath and Plaster Furred Ceiling on the Underside of Concrete Joists

supplementary specification no. 5-C

FURRED METAL LATH CEILING ON WOOD JOISTS

(To be used in conjunction with Specification No. 5, page 14)

note: *This construction is recommended where increased fire retardance is essential, or where the finest job of plastering is desired. It is also especially recommended for structures subject to greater-than-ordinary vibration and where a very high factor of safety is desirable, such as in school buildings, auditoriums, or other places of public assembly.*

C5.2.2—16d common nails shall be driven in a horizontal position clear through each joist at least 2" above the bottom edge of joist. Nails shall be spaced to conform to the spacing of furring members, and shall be so aligned that furring members will be at right angles to the joists. In place of 16d common nails driven clear through the joists, two 8d common nails may be used, one on each side of joist, driven diagonally downward to a penetration of at least 1½" from a point not less than 2" above the bottom edge of joists.

C5.2.3—Channel or pencil rod furring shall be attached flush against the bottom edges of joists by securely saddle-tying the furring to each nail with not less than No. 18 gage galvanized annealed tie wire.

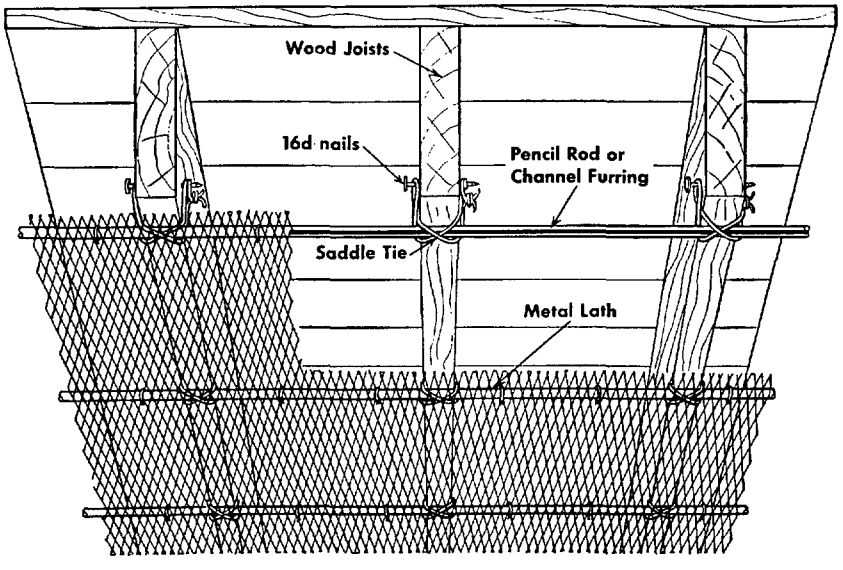

Metal Lath and Plaster Furred Ceiling on the Underside of Wood Joists

SGP 0003117

General Specifications No. 6

Suspended Metal Lath Ceilings Below: Steel Construction - Concrete Flat Slab Construction - Concrete Joist Construction Wood Construction

6.1—SIZE AND SPACING OF RUNNERS AND CROSS FURRING

6.1.1—Size and spacing of channels for main runners shall conform to Table VIII, and such runners shall be cross furred with pencil rods or channels of the size and at the spacing required in Table VII. (It is recommended that when main runners are suspended from joists that they run transverse to the direction of the joists.) Neither main runners nor cross furring shall be let into nor come in contact with abutting masonry or reinforced concrete walls or partitions. A main runner shall be located within 6" of the wall to support the ends of the cross furring, and hangers shall be located to support the ends of the main runners.

When main runners are spliced, the ends shall be overlapped not less than 12" (with flanges of channels interlocked) and securely tied near each end of the splice with two loops of No. 16 gage galvanized wire.

6.2—ATTACHMENT OF CROSS FURRING TO RUNNERS

6.2.1—The cross furring shall be securely saddle-tied to the main runners by not less than No. 16 gage galvanized wire at each crossing, or by No. 9 gage wire hairpin clips or equivalent clips or attachments. When furring members are spliced, the ends shall be overlapped not less than 8" (with flanges of channels interlocked) and securely tied near each end of the splice with two loops of No. 16 gage galvanized wire.

6.3—TYPES OF METAL LATH AND ATTACHMENT TO FURRING

6.3.1—Metal Lath, of one of the types and weights listed in Table I (on page 4) for the corresponding spacing of furring, shall be attached to the furring members with the long dimension of the sheet across the furring, and shall be carried down 6" on to the walls and partitions, or Cornerite shall be used.

6.3.2—Metal Lath shall be attached to the steel furring members by No. 18 gage galvanized annealed wire ties spaced at not to exceed 6" intervals. Ties shall be placed where sides of sheets lap at supports and at side laps of sheets between supports.

6.3.3—Diamond Mesh Metal Lath shall be lapped not less than ½" at sides; Rib Metal Lath shall be lapped at sides by nesting outside ribs or selvage. All Metal Lath shall lap 1" at ends.

6.3.4—End laps of sheets should generally occur only over supports; if between, ends of sheets shall be laced or adequately tied together with No. 18 gage galvanized annealed tie wire.

6.4—HANGERS

6.4.1—All wire hangers shall be of such length that the lower ends of hangers may be saddle-tied or wrapped around the runners so as to prevent turning or twisting of the runners and to develop the full strength of the hangers.

6.4.2.—All wire hangers shall be type 1 galvanized.

6.4.3 etc.—

Insert here applicable supplementary specifications for type of construction involved.

Suspended Ceilings of Metal Lath Below Steel Construction, Specification No. 6-A (page 17).

Suspended Ceilings of Metal Lath Below Concrete Flat Slab Construction, Specification No. 6-B (page 17).

Suspended Ceilings of Metal Lath Below Concrete Joist Construction, Specification No. 6-C (page 17).

Suspended Ceilings of Metal Lath Below Wood Construction, Specification No. 6-D (page 18).

TABLE VII

SIZE AND SPACING OF CROSS FURRING FOR FURRED AND SUSPENDED CEILINGS BASED ON SPAN OF LATH

Center to Center Spacing of Supports	Cross Furring Size, Type and Weight	Maximum Spacing
Up to 2'	⅜" Pencil Rods	19"
Up to 2'-6"	⅜" Pencil Rods	12"
Up to 3'	¾" cold-rolled channels @ 300 Lbs. per 1000 feet	24"
Up to 3'-6"	¾" cold-rolled channels @ 300 Lbs. per 1000 feet	19"
Up to 4'	¾" cold-rolled channels @ 300 Lbs. per 1000 feet	16"

Ventilating—Where lath and plaster ceilings are located under roof construction, it is recommended that the space thus established be ventilated. Such ventilation shall be designed in accordance with accepted engineering practice.

TABLE VIII

SIZE AND SPACING OF MAIN RUNNERS FOR SUSPENDED CEILINGS

Center to Center Spacing of Hangers Along Runners	Size of Cold Rolled Channel	Main Runners (Weight per 1000 feet)	Maximum Center to Center Spacing of Runners
Up to 2'	¾"	300 lbs.	3'
Up to 3' (1)	¾"	300 lbs.	27"
Up to 3'	1½"	475 lbs.	4'
Up to 3'-6"	1½"	475 lbs.	3'-6"
Up to 4'	1½"	475 lbs.	3'
Up to 5'	2"	590 lbs.	3'-6"

note—Where hangers are spaced not to exceed 24" on centers along each runner or carrying channel, cross furring channels may be omitted and lath attached crosswise and directly to runner channels; provided, however, that spacing center to center of such runner channels shall not exceed the limits specified in TABLE I (on page 4).

(1) This spacing for concrete joist construction only.

TABLE IX

SIZE AND SPACING OF HANGERS FOR SUSPENDED CEILINGS

Maximum Ceiling Area Supported Per Hanger	Maximum Center to Center Spacing of Hangers Along Runners	Minimum Size of Gage Galvanized Wire	Alternate Types and Sizes of Hangers for Areas Up to 17.5 Sq. Ft.
Up to 12.5 sq. ft.	4'	No. 9	3/16" or ¼" round mild steel rods or 1x 3/16" flat mild steel bars
Up to 16 sq. ft.	4'	No. 8	3/16" or ¼" round mild steel rods or 1x 3/16" flat mild steel bars
Up to 17.5 sq. ft.	5'	No. 7	3/16" or ¼" round mild steel rods or 1x 3/16" flat mild steel bars

PROTECTION OF HANGERS—Rod and flat hangers may be ordinary unpainted mild steel, except where there is excessive moisture or corrosive fumes, all rod and flat hangers shall be coated with rust-inhibitive paint. Painting also is recommended for theaters and auditoriums, and large ceilings in public buildings.

In Concrete Joist Construction, ¼" round mild steel hangers may be placed 48" on center in alternate rows of concrete joists in 20" wide form construction.

ATTACHMENT OF FLAT HANGERS TO MAIN RUNNER (CARRYING) CHANNELS—Lower ends of flat steel hangers shall have holes punched at the proper distance (but not closer than ⅜" from ends) to which the runner channel shall be bolted with not less than ⅜" diameter bolts, provided that for ceilings over auditoriums, theatres and other public buildings and elsewhere where an added factor of safety is desirable, the lower end of flat steel hangers shall be long enough to bend up sharply as stirrups under runner channel to which they shall be bolted as already described, and shall continue up and be securely tied to main portion of hanger not less than 6" above runner channel.

(If live loads or additional dead loads are contemplated, hanger and channel sizes, and method of attachment must be designed accordingly.)

HANGERS TO RESIST COMPRESSION—In regions subject to tornadoes or cyclones, where upward pressures are likely to be exerted or where suspended ceiling areas are exposed to high winds through outside openings during construction, hangers shall either be of a type to resist compression, or struts of ¾" channels or tees (of heavier size where hangers exceed 4' o.c.) may be used. These struts shall be used vertically between runner channels and the construction above, being spaced not to exceed 8' o.c. in both directions. They shall be in addition to the regular hangers.

SGP 0003118

supplementary specification no. 6-A

SUSPENDED CEILINGS OF METAL LATH BELOW STEEL CONSTRUCTION

(To be used in conjunction with Specification No. 6, page 16)

A6.4.3—Size and spacing of hangers for Metal Lath ceilings suspended from steel construction shall be as provided in Table IX (on page 16).

A6.4.4—For steel beams, joists or other steel construction, hangers shall be wrapped around, inserted through, or clipped or bolted to steel structural supports, so as to develop the full strength of the hangers. All wire hangers shall be of ample length such that the lower end of hangers may be saddle-tied or wrapped around the runners so as to develop the full strength of the hangers.

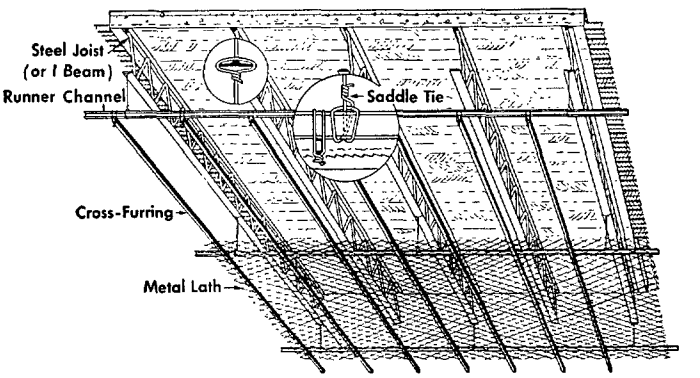

Metal Lath and Plaster Ceiling Suspended from Steel Construction

supplementary specification no. 6-B

SUSPENDED CEILINGS OF METAL LATH BELOW CONCRETE FLAT SLAB CONSTRUCTION

(To be used in conjunction with Specification No. 6, page 16)

B6.4.3—Size and spacing of hangers for Metal Lath ceilings suspended from concrete flat slab construction shall be as provided in Table IX (on page 16).

B6.4.4—Hangers shall be secured to steel reinforcement in concrete with cinder aggregate and may be secured to steel reinforcement or looped or embedded in concrete with other types of aggregates.

B6.4.5—Special inserts, at least equivalent in strength to the hangers, to which the hangers can later be attached, may be inserted through or attached to the top of the forms in lieu of anchoring the hangers directly in the concrete.

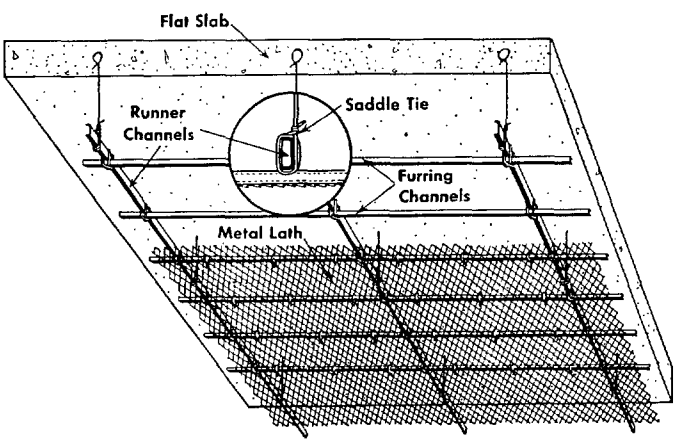

Metal Lath and Plaster Ceiling Suspended from Concrete Flat Slab Construction

supplementary specification no. 6-C

SUSPENDED CEILINGS OF METAL LATH BELOW CONCRETE JOIST CONSTRUCTION

(To be used in conjunction with Specification No. 6, page 16)

C6.4.3—Size of hangers for Metal Lath ceilings suspended from concrete joist construction shall be as provided in Table IX (on page 16).

C6.4.4—Hangers shall be inserted through the centering at the bottom of joists, and shall be provided with a loop or other deformation to positively enter the concrete, or be secured to the reinforcing steel.

In 20" wide form construction, hangers shall be spaced at 48" on centers longitudinally in alternate rows of concrete joists. In 30" wide form construction, hangers shall be spaced at 48" on centers longitudinally in each row of joists.

Other approved attachments or inserts may be used if of equivalent strength.

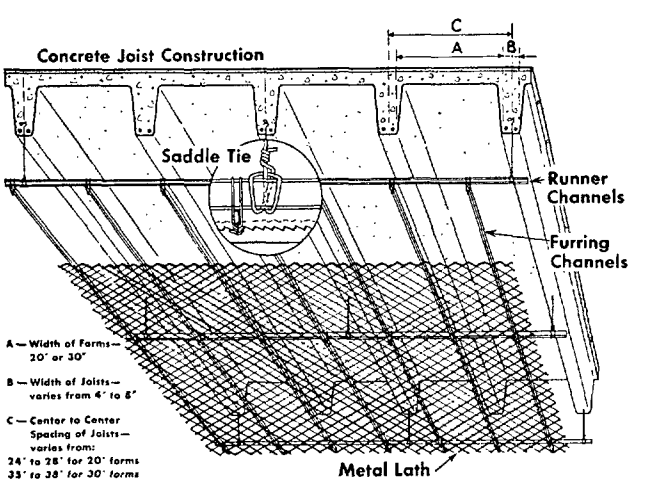

Metal Lath and Plaster Ceiling Suspended from Concrete Joist Construction

SGP 0003119

supplementary specification no. 6-D

SUSPENDED CEILINGS OF METAL LATH BELOW WOOD CONSTRUCTION

(To be used in conjunction with Specification No. 6, page 16)

D6.4.3—Size and spacing of hangers for Metal Lath ceilings suspended from wood construction shall be as provided in Table IX (on page 16).

D6.4.4—Wire hangers shall be inserted in holes drilled a minimum of 3-in. above bottom of joists and with the upper end of the hanger in each case twisted three times around itself, **or**

D6.4.5—Wire hangers shall be attached to 30d nails, driven on a downward slant into sides of joists which are sufficiently wide to permit not less than 3 inches penetration into the wood. Such nails shall be driven at least 5" from bottom edges and not over 36" on centers, with the upper end of the hanger in each case twisted three times around itself, **or**

D6.4.6—Four 1½" No. 9 gage wire staples shall be used to secure wire hangers to the side of joists. Staples shall be driven horizontally or on a downward slant, three near the upper end of the loop and the fourth to fasten the loose end, **or**

D6.4.7—When purlins exceed spacings of 4' o.c., 1½" No. 0 screw eyes shall be fastened into heavy wood flooring at not over 3' o.c. so that they will support an area not over 9 square feet, with upper end of hanger to be inserted in screw eye and in each case twisted three times around itself. (This spacing is determined on resistance to withdrawal of the No. 0 screw eye in Northern White Pine. When wood offering greater resistance is used, the spacing may be slightly increased or a smaller size screw eye would be permitted.

Example: A No. 4 screw eye in Douglas Fir has equivalent resistance to withdrawal to a No. 0 in Northern White Pine, **or**

D6.4.8—Flat hangers, if used, shall be spiked to sides of joists with two 12d nails driven through holes drilled in the hanger and clinched at least 3 inches above bottom of joists.

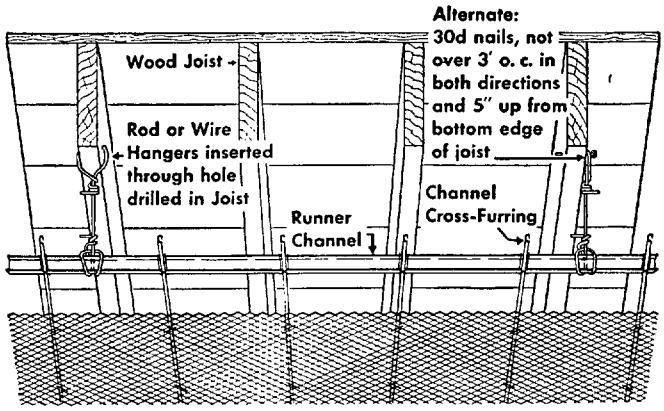

Metal Lath and Plaster Ceiling Suspended from Wood Construction

Specifications No. 7 — Metal Lath Beams and Cornices

7.1—SIZE, WEIGHT AND SPACING OF BRACKETS

7.1.1—Brackets shall be formed of ¾" cold-rolled channels weighing not less than 300 lbs. per 1000 lineal feet, or from 3/16" by 1" flat steel, and shall be spaced as follows:

7.1.2—Where ¾" cold-rolled channels are used for longitudinal furring each member of the cornice or beam brackets shall be not more than 3'-0" apart.

7.1.3—Where ¼" pencil rods are used to fur each member, brackets shall not exceed 19" apart.

7.1.4—Where furring is not intended to be used at each member, brackets shall not exceed 13½" on centers for 3.4. lb. Diamond Mesh Metal Lath, provided that at least one runner bar or channel shall be installed to hold work in proper shape.

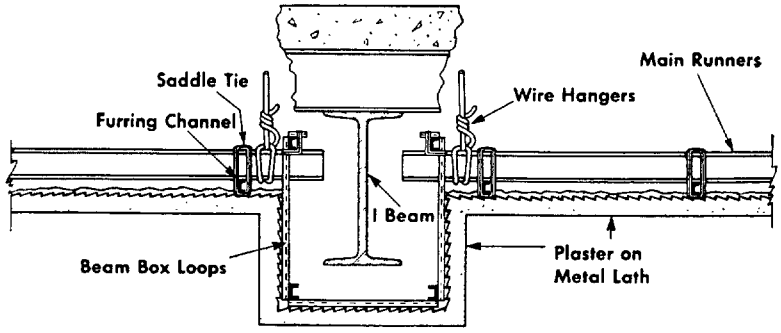

Metal Lath and Plaster Beam Formed as Part of a Suspended Ceiling

7.2—TIE WIRE

7.2.1—Wire for tying brackets to structural members shall be not less than No. 14 gage galvanized wire using saddle tie, or use six loops of No. 18 gage galvanized annealed wire; for tying longitudinal rods to brackets, wire shall be not less than No. 18 gage galvanized annealed wire, and for tying Metal Lath to rods or channels, wire shall be not less than No. 18 gage galvanized annealed wire.

7.3—ERECTION OF BRACKETS, CHANNELS AND RODS

7.3.1—Brackets shall be formed to template to require a minimum of plaster (but in no case less than ¾" thickness), in accordance with details furnished by the architect. Brackets shall be securely wired, bolted or clamped to walls, ceilings, or structural members, as the case may require, and be spaced as in Section 7.1 preceding. For fastening brackets to concrete or masonry beams or walls, holes shall be drilled and plugged, or other equally strong anchorage shall be provided; when fastening to terra cotta, toggle bolts or suitable anchor shall be used.

7.3.2—Longitudinal channels or rods shall be wire tied or bolted to brackets.

7.4—ERECTION OF METAL LATH

7.4.1—Metal Lath shall be applied to the longitudinal channels or rods or direct to brackets and be bent into and made to conform with the outline of the finished beam or cornice. Side laps shall not occur at the corners, but lath shall be carried around to the next member, or corner strips shall be used at all corners.

Specifications No. 8

Metal Lath and Plaster Protection for Steel Columns

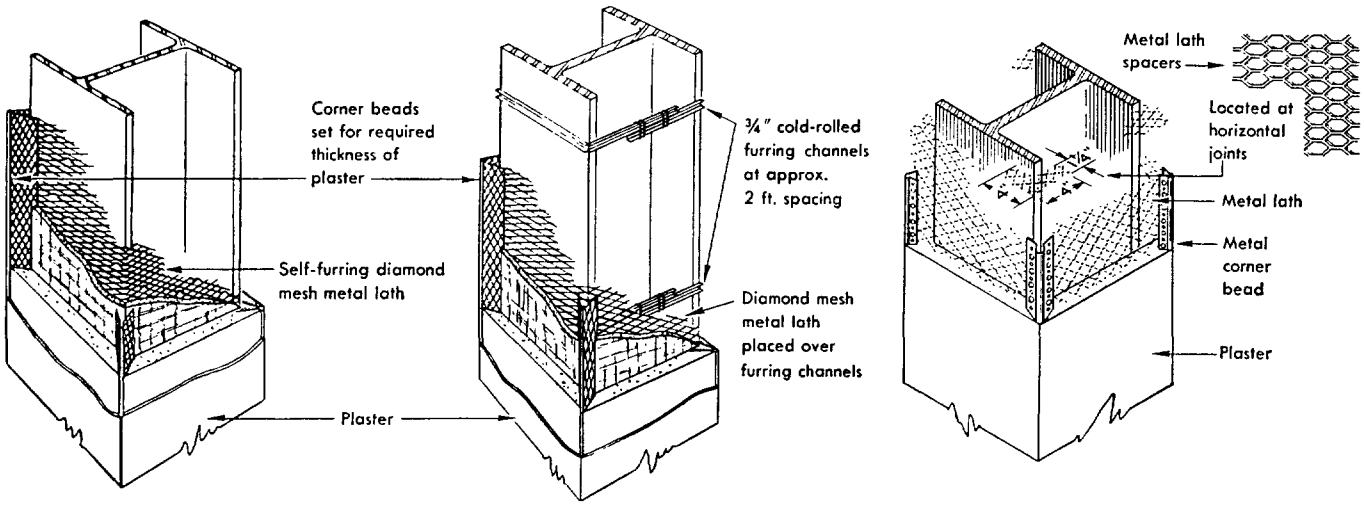

Optional Methods for Lathing Steel Columns

8.1—METAL LATH

8.1.1—Metal Lath shall be Diamond Mesh or Self-Furring and weigh not less than 3.4 lbs. per square yard.

8.2—ERECTION OF LATH

8.2.1—Metal Lath shall be formed to fit around the column and shall be furred at least ¼" from the face of the steel flange to provide space for the plaster to key. Self-Furring Metal Lath requires no additional furring devices. Diamond-Mesh Metal Lath shall be furred with channel brackets, special clips or L-shaped spacers cut from Metal Lath and inserted horizontally between the lath and the column flanges.

8.3—CORNER BEAD

8.3.1—Corner beads shall be fastened at each corner with steel clips or wire ties so that they are rigid, straight and adjusted to permit the required thickness of plaster.

8.4—PLASTERING

8.4.1—Lightweight aggregate-gypsum plaster shall be used for two, three and four-hour fire protection. For one-hour protection, gypsum-sanded plaster may be used. (Consult local building code for thickness of plaster required and proportions of plaster mix. Complete data on fireproofing with metal lath and plaster is available from the Metal Lath Manufacturers Association. Write for Technical Bulletin Nos. 3 and 8.)

note: *For enclosure of columns with vertical furring see Specification No. 1-D. page 9.*

Specifications No. 9

Metal Lath for Exterior Stucco Reinforcing on Steel Frame Construction

9.1—STUDDING OR FURRING FOR METAL LATH

9.1.1—Studding or furring of light steel channels, pressed steel members, steel reinforcing rods or metal studs, spaced as required by the particular system of wall construction used, shall be securely fastened to the structural frame by wire ties or clips, by bolting or by welding. Steel channels and pressed steel members shall be furnished to the job painted with one factory or shop coat of rust-inhibitive paint.

9.2—METAL LATH

9.2.1—Reinforcing shall be not less than 3.4 lb. Diamond Mesh Metal Lath, cut from galvanized sheets, for which supports shall be spaced not more than 16" on centers. Unless back-plastered construction is employed, Rib Metal Lath shall not be used. Lath shall be applied with the long dimension of the sheet across supports and shall be attached to the studs or furring by wire ties of No. 18 gage galvanized annealed tie wire, or by nailing or by equivalent attachments, spaced at intervals not exceeding 6" along such studs or furring members. Lath shall be lapped at sides not less than ½", and at ends not less than 1". End laps of sheets should generally occur only over supports and shall be staggered; end laps of sheets between supports shall be securely laced together with No. 18 gage galvanized annealed tie wire. Sheets shall be returned around corners at least 4".

note: *Spacings for supports in this Specification are established at a maximum of 16" based on the allowable span of the Metal Lath. When structural members exceed 16" spacing then provision should be made for intermediate support of the Lath.*

SGP 0003121

Specifications No. 10

Metal Lath and Expanded Metal (Stucco Mesh) for Exterior Stucco Reinforcing on Wood Frame Construction

10.1—WHERE USED

10.1.1—Expanded Metal Lath (Diamond Mesh) or expanded metal reinforcing (Stucco Mesh) shall be used for stucco base on all wood frame structures of open or sheathed type, over old masonry walls and all surfaces that do not provide a satisfactory bond for the stucco.

10.2—MATERIALS

10.2.1—Reinforcing shall be Diamond Mesh Metal Lath, weighing not less than 3.4 lb. per sq. yd. and expanded from galvanized sheets or coated with rust inhibitive paint after fabrication, or Expanded Metal Stucco Mesh weighing 1.8 lb. per sq. yd. and coated with a rust inhibitive paint. Metal Lath weighing 3.4 lb. per sq. yd. shall be used on all soffits and horizontal surfaces and for back-plaster construction.

10.3—ATTACHMENT TO WOOD SUPPORTS

10.3.1—Metal Lath or Stucco Mesh shall be attached at not greater than 6" intervals vertically and 16" horizontally with galvanized nails having a penetration into vertical wood supports of at least 1" and into horizontal wood supports of at least 1¼". It shall be spaced from the backing not less than ¼" with furring nails or devices, or Self-Furring Metal Lath may be used.

Metal Lath shall be lapped ½" at sides and 1" at ends. Stucco Mesh shall be lapped one diamond at sides and ends.

End laps of sheets shall generally occur over supports and be staggered; and end laps of sheets between supports shall be laced together with No. 18 gage galvanized annealed tie wire. Sheets shall be started one stud away from the corner and be bent around so as to avoid a junction at the corner.

CORNER, JOINT AND OTHER REINFORCEMENT

1.0—CORNERS

1.1—All internal vertical and horizontal angles of any interior surfaces to be plastered (including gypsum lath and fibre-board lath) shall be continuously reinforced with Metal Lath Cornerite not less than 6" wide, 3" on each surface. Cornerite shall be attached at the outer edges.

All external angles to be plastered shall be protected with galvanized expanded wing or perforated corner beads.

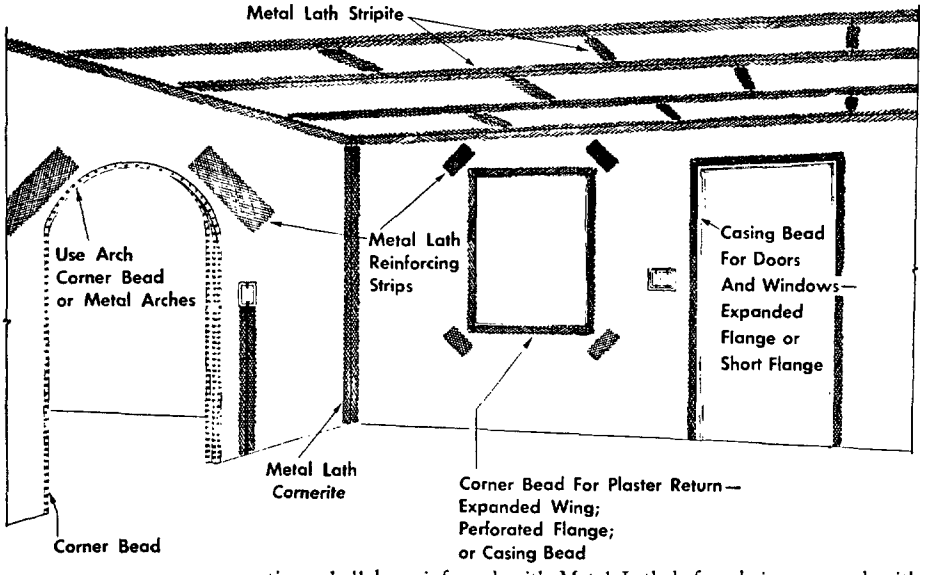

2.0—LATH JOINTS

2.1—Wherever gypsum lath, fibre lath and similar materials are used as plaster bases, a strip of flat expanded Metal Lath (Stripite) not less than 4" wide shall be applied over joints between the sheets of such materials to reinforce the plaster.

3.0—OPENINGS

3.1—At all corners of openings more than 2 square feet in area in any surface to be plastered, strips of Metal Lath at least 12" wide and 24" long shall be attached over the plaster base at an angle of approximately 45 degrees. (Such additional reinforcing is not required over Metal Lath.)

4.0—CHASES AND DOOR BUCKS

4.1—All chases or similar openings in horizontal or vertical masonry surfaces or other solid bases to be plastered shall be covered with Metal Lath.

4.2—Where door buck jambs are continuous from floor to ceiling in masonry partitions to be plastered, that portion of the jamb above the header shall be covered with a strip of Metal Lath at least 12" wide and continuous from top of opening to ceiling.

4.3—The unexposed back of electrical outlet boxes in solid partitions shall be reinforced with Metal Lath before being covered with plaster.

5.0—INTERSECTION OF METAL LATH AND OTHER TYPES OF PLASTER BASES

5.1—Wherever Metal Lath abuts masonry, concrete or other types of bases that are to be plastered, the Metal Lath shall be returned or extended 6" onto the abutting plaster base.

6.0—DISSIMILAR MATERIALS

6.1—Where cement plaster is to be applied over gypsum lath or gypsum block, or where any surface to be plastered has been previously painted, or where any masonry surface to be plastered does not have adequate mechanical or chemical bond, the whole surface shall be covered with Metal Lath. (Self-Furring or "Dimpled" Lath is recommended for smooth surfaces so that the plaster can form a lasting key.)

Printed in U.S.A.

METAL LATH MANUFACTURERS ASSOCIATION

ENGINEERS BUILDING

CLEVELAND 14 • OHIO

Alabama Metal Lath Company, Inc.
Birmingham 1, Alabama

The Bostwick Steel Lath Company
Niles, Ohio

Ceco Steel Products Corporation
Chicago 50, Illinois

The Goldsmith Metal Lath Company
Cincinnati 32, Ohio

Inland Steel Products Company
Milwaukee 1, Wisconsin

National Gypsum Company
Buffalo 2, New York

Penn Metal Company, Inc.
Parkersburg, West Virginia

Truscon Steel Division
Republic Steel Corporation
Youngstown, Ohio

United States Gypsum Company
Chicago 6, Illinois

Wheeling Corrugating Company
Wheeling, West Virginia

SGP 0003122