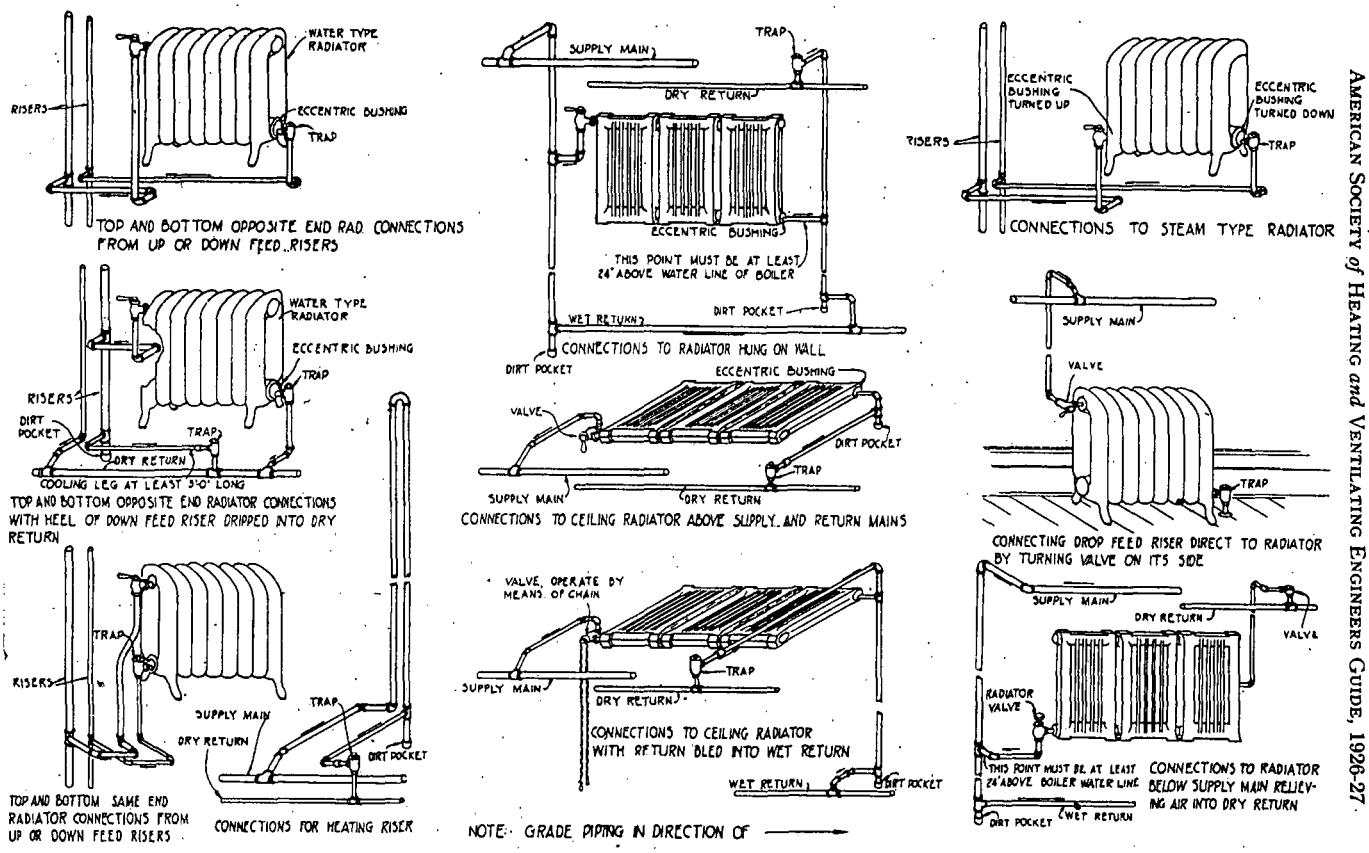

FIG. 24. TYPICAL RADIATOR CONNECTIONS FOR STEAM HEATING SYSTEMS

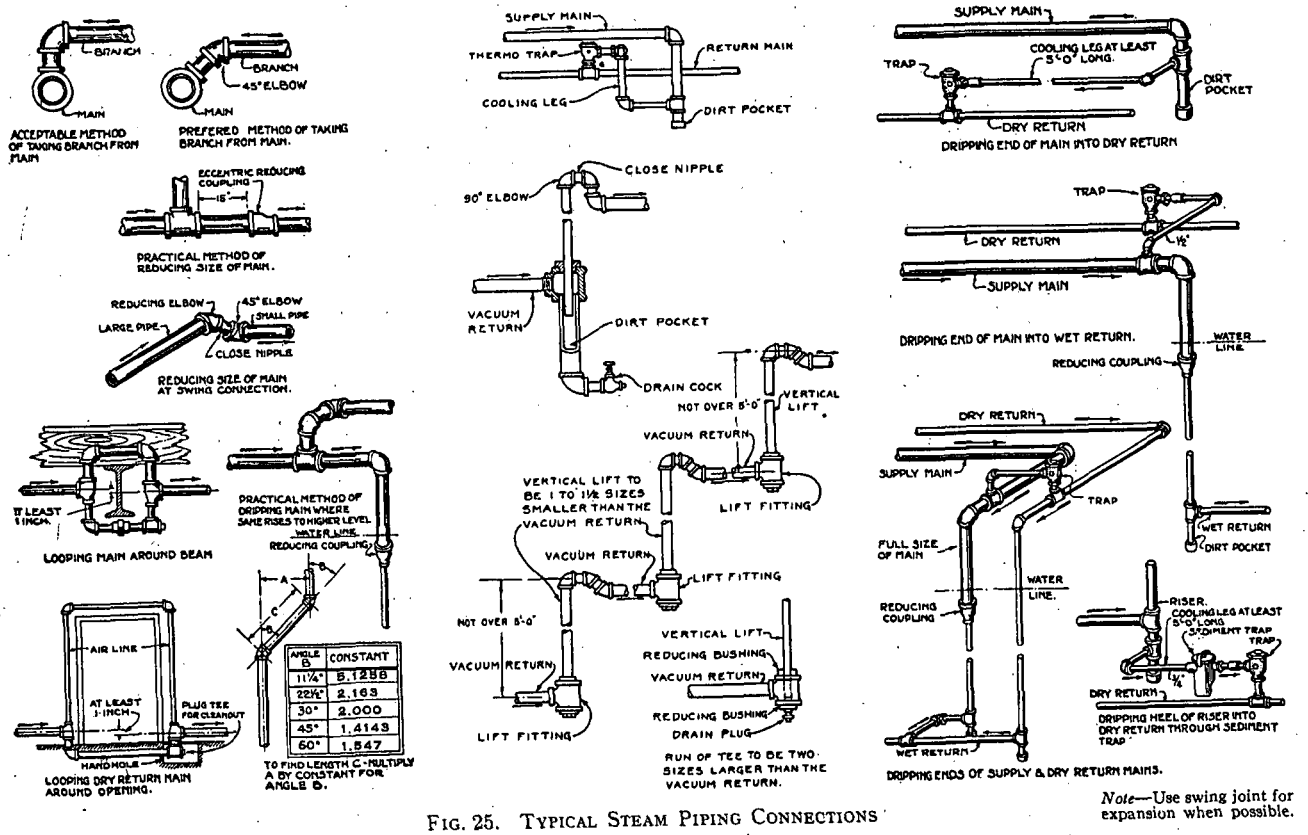

ANGLE B	CONSTANT
11¼°	5.1288
22½°	2.163
30°	2.000
45°	1.4143
60°	1.547

FIG. 25. TYPICAL STEAM PIPING CONNECTIONS

Note—Use swing joint for expansion when possible.