Industry and PCBs

Practical Solutions to PCB Problems

Published By The Canadian Electricity Forum Inc.

MONS 225188

© 1987 The Canadian Electricity Forum Inc
All rights reserved. No part of this book may be reproduced or transmitted in any form or by any means without the written permission of the publisher.
Printed and bound in Canada.
ISBN 0-9693300-0-6
The Canadian Electricity Forum Inc
Suite 400, 1305 Pickering Parkway,
Pickering, Ontario,
L1V 3P2

MONS 225189

Table of Contents

Advertisers 5
Publisher's Statement 7
Part 1 — Facts About PCBs
Facts About PCBs 11
Part 2 — Proceedings
PCBs And The Public 23
Health Effects of PCBs And Related Substances 25
PCB Residue in Foods and Human Tissue 29
Decontamination of IREQ's High Voltage
Laboratory Following a PCB Fire 33
PCBs and Government Regulations 45
PCBs and Legal Liabilities 51
A Comprehensive Approach to Managing
PCB Contaminated Electrical Equipment 59
Chemical Decontamination 63
High Temperature Destruction of PCB Wastes 67
The Role of the Fire Service and PCBs 75
Part 3 — Directory of PCB Services
Canadian Directory of PCB Service Companies 81
Government Services Directory 94

NONS 225190

Advertisers

The Canadian Electricity Forum gratefully acknowledges the advertising support from the following companies:

Canadian Electrical Association
Canviro Consultants
Conestoga Rovers and Associates
Enviroclean
International Environmental Materials Inc.
Mann Testing Laboratories
Morgan Shaffer Corporation
Ontario Disposal Ltd.
Oil Canada Ltd
PPM Canada Inc.
Proctor and Redfern Ltd.
Rondar Inc.
Sanexen International
Sun Environmental Ltd.
Syprotec Inc.
The Thomas Environmental Group
Varian Canada Inc.
Westinghouse Canada Inc

MONS 225191

Publisher's Comment

The Truth About PCBs

Over the past decade, public government and industrial awareness of environmental issues has increased considerably. For PCBs, this has led to their discontinuance in manufacturing, elimination from service through responsible phase out strategies, and their destruction through recently developed innovative technologies. While PCBs have in the past been branded as a highly toxic substance, widespread fear and misunderstanding to a large extent have been counteracted by the responsible actions and education by industry.

What caused such fear over PCBs in the first place? The answer to this question dates back to 1968, in Yusho, Japan, where people consumed rice oil tainted with a number of toxic chemicals and also PCBs. The result was an outbreak of sickness and panic that PCBs caused cancer and other health problems. A subsequent investigation, however, demonstrated the health problems were not linked to PCBs but to a cousin — a highly toxic chemical known as polychlorinated dibenzofurans (PCDFs). PCDFs are produced when PCBs are involved in low temperature fires and are a serious health threat.

In Canada, extensive media coverage of a PCB spill near Kenora, Ontario, played on the fact that a pregnant woman and her family were exposed to PCB-contaminated transformer oil. Television pictures showing roads in Northern Ontario being torn up and cars impounded created considerable, unnecessary anxiety over PCBs.

Nearly every Canadian has been exposed to PCBs in some form or another for many years. PCB exposure for those who work in the industrial and electrical sectors has been most extensive, particularly those who are involved in the manufacture and repair of electrical devices which contain PCB fluid.

North American occupational health studies conducted on this group of people have conclusively demonstrated that the potential health danger from a single exposure to PCBs is virtually zero. Even prolonged contact has not been proven to be a health risk, and there is no significant difference in statistics in the health rates between industrial workers who have handled PCBs for years, and those who have had no occupational exposure to PCBs.



The phase out of PCBs over the past decade has had the desired effect — PCB levels in the environment are now dropping. The overall solution to the elimination of PCB waste is the safe and efficient disposal technology that is now available.

The 1987 Industry and PCBs Forum, sponsored by the Canadian Electricity Forum and the Canadian Electrical Association, was organized in an effort to continue this process of education and exchange between PCB experts and those who own equipment and waste contaminated with PCBs. This book, too, is another communications vehicle on PCBs. This book is intended to present general and detailed information in a variety of areas related to PCBs. We must, however, give credit to the Canadian Electrical Association, Environment Canada, Ontario Ministry of Environment and the Canadian Council of Resource and Environment Ministers for the use of their material in the compilation of this book.

Randolph Hurst
President, Canadian Electricity Forum

MONS 225192

Part 1

Facts About PCBs

MONS 225193

Facts About PCBs

By Randolph Hurst

Polychlorinated biphenyls (PCBs) are actually a group of more than 200 chemical compounds, predominantly non-flammable, which have been in widespread use for nearly 60 years. PCBs are also known by various brand names such as Aroclor, Pyranol, Inerteen, Askarel and Hyvol.

PCBs are a synthetic chemical compound consisting of chlorine, carbon and hydrogen. First developed in 1881 and commercially manufactured in 1929, PCBs are relatively fire-resistant, very stable, do not conduct electricity and have low flammability characteristics at normal temperatures. These properties have made them a desirable insulating medium in a wide range of industrial and consumer related product applications. On the other hand, these applications have also introduced PCBs into the environment. The greatest problem is their extreme resistance to chemical and biological breakdown in the environment.

Physical Properties

PCBs are usually light coloured liquids that feel like thick, oily molasses. However, some PCB compounds form sticky, yellow liquids or a brittle gum ranging in colour from amber to black. In most organic solvents PCBs are soluble, but they are almost insoluble in water. The reason for this is that PCBs are heavier than water. Hence, when combined with water they sink to the bottom and are not dissolved.

As mentioned, most PCBs are not very volatile at normal operating temperatures. However, when PCBs are involved in fires in transformers or capacitors, they release highly toxic substances called polychlorinated dibenzofurans (PCDF) and the decontamination cost and legal implications for most property owners, public institutions, and plant operators have forced owners of PCB-contaminated equipment to retire this equipment from service.

PCBs — How Were They Used?

In answer to the North American electrical industry s requirement for a more stable transformer and capacitor cooling fluid, commercial production of PCBs began in the United States in 1929. Until PCBs were banned in 1977, PCBs were also used in hydraulic fluids, surface coatings for carbonless copy paper, plasticizers in sealants, caulkings, synthetic resin, rubbers, paint, waxes, and asphalt and as flame retardants in lubricating oils

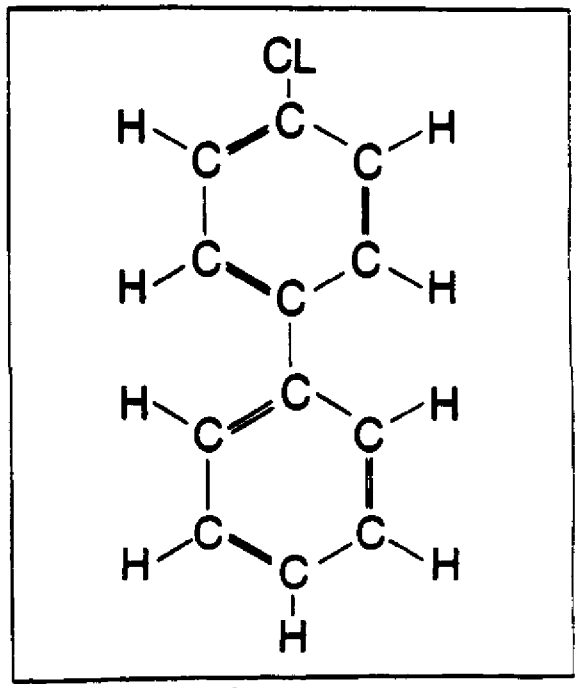

Typical PCB Molecular Structure

MONS 225194

Electrical Uses

Most large industrial electrical transformers are filled with about 1,000 kg of dielectric fluid. This fluid acts as both a heat exchanger and insulator fluid to prevent transformer overheating. The fluid most often chosen to perform this task was mineral oil. However, mineral oil was found to be potentially hazardous, especially in applications where power surges could occur, because when power surges occur electrical equipment can arc. This arc in turn can ignite mineral oil.

To address concerns over the possibility of fires in oil-filled transformers, researchers were asked to find an alternative dielectric fluid. Because of the fire resistance and insulating properties of PCBs, the electrical industry embraced their development. Hence, in the 1930s a dielectric fluid called "askarel" (containing up to 70 per cent PCBs) was commercially developed for use in high-voltage transformers where arcing and thus potential overheating and fire was a concern. Electrical capacitors, too, use much smaller quantities of dielectric fluid for the same reason. Electrical capacitors are used to allow more efficient use of electrical energy by automatically correcting power factor. Capacitors vary in size, from that of an ice cube to the size of a refrigerator. Small capacitors are used in florescent lighting ballasts and electronic equipment, while large capacitors are usually found in industrial settings and commercial buildings. PCBs can be found in almost every capacitor manufactured between 1930 and 1980.

The Inventory of PCBs

Of the 40,000 tonnes of PCBs imported into Canada experts can account for about 24,000 tonnes. Of this 24,000 tonnes, 61 per cent is known to be still used in electric transformers, 12 per cent in electrical capacitors, and 27 per cent is known to be stored awaiting destruction. Besides this 24,000 tonnes that has been accounted for, the balance (16,000 tonnes) has entered the environment and can be found in trace amounts across Canada in almost every living organism.

An Inventory by Sector

An inventory conducted by both the Federal and Provincial governments has revealed there are about 200,000 pieces of PCB-contaminated equipment across Canada. From this inventory it was found that the industrial sector controlled the largest amount of PCBs. Electric utilities have 20.4 per cent of known existing PCBs. Forestry and pulp and paper companies control at least 11.3 per cent of known PCBs. The rest, some 22.4 per cent, are found in commercial storage facilities. The largest known amounts of PCBs exist in Ontario (39 per cent) and Alberta (23 per cent). This is from the same federal and provincial government inventory report.

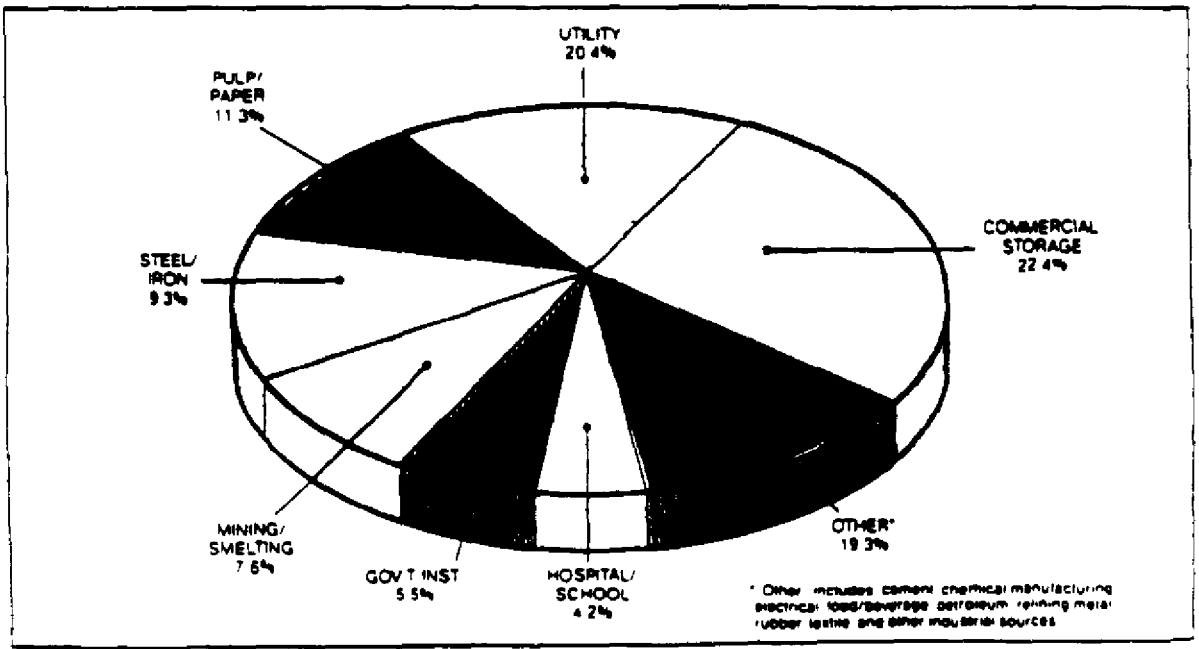

PCB Inventory by Sector (1985)

Courtesy: Environment Canada

MONS 225195

Storage Facilities

There are approximately 6,500 tonnes of concentrated PCB liquid currently in storage awaiting disposal. This amount is expected to increase as the phase-out of PCB-contaminated equipment increases. In addition, most large electrical utilities and manufacturing firms have established secure storage facilities for their own PCBs at their own sites when necessary. The storage of PCB-contaminated mineral oil, on the other hand, is in vast quantities waiting destruction or disposal.

Environmental Dispersal

Widespread mobility and dispersal of PCBs can be found in the Canadian environment, and rest of the world. Studies performed demonstrate that PCBs have been found in polar bears in the Arctic, fish in the Great Lakes, and human beings throughout the world. PCBs can be found in the atmosphere, in soil and sediments and human milk. There is some evidence to support that PCB levels in living organisms are high in urban and industrial cities.

How are PCBs Being Controlled?

It is widely believed that the poisoning incident in Yusho, Japan brought PCBs to the attention of governments and industry around the world. In the United States, this incident persuaded Monsanto Company, North America's sole PCB manufacturer, introduce voluntary and partial restrictions their sales of PCB fluids. In addition, The Organization for Economic Cooperation and Development (OECD) in 1973 urged all of its member countries to develop control mechanisms and ways to limit the use of PCBs. The manufacture of PCBs in North America has been banned since 1977 and their use as a component in new products or processes, either manufactured or imported, was prohibited by Canadian regulations in 1977 and in 1980.

In both Canada and the United States, PCBs use is permitted only in closed electrical and hydraulic systems built before 1977. The United States has developed an accelerated phase-out strategy, where PCB-contaminated equipment is being removed from service as quickly as possible. Under current Canadian law, electrical equipment containing PCBs is permitted to be used in service until the end of its service life. Some of these systems may be in service for another 20 to 40 years. Strict maintenance and handling procedures are in force for the owners of PCB-contaminated equipment and along with strict regulations and close environmental monitoring by both the provincial governments and the federal government, this helps to ensure that PCB-contaminated equipment is operated, maintained, handled, transported and stored safely and according to Canadian law.

The federal and provincial governments, in 1985, introduced into law tighter regulations to ensure the safe use, handling and transportation of PCB-related equipment and other hazardous materials. Early evidence demonstrates that control actions appear to have been effective in reducing PCB levels from entering the Canadian environment.

Results

Recent findings demonstrate that controls over the manufacture and restriction of PCBs in closed systems such as transformers and capacitors has resulted in a gradual decline of PCB levels in the environment. Studies undertaken in the Great Lakes and other Canadian lakes, using PCB concentrations in fish as an indicator, have demonstrated a slight decline in the level of PCBs over recent years.

How Does Canadian Legislation Control PCBs?

The federal government and most provincial governments have developed regulations dealing specifically with PCBs but most legislation deals more generally with the problem of hazardous waste and other dangerous goods.

The federal Environmental Contaminants Act has three regulations and one amendment since its introduction in 1976. The Act restricts the use of PCBs and controls the phase-out of PCB-contaminated equipment throughout Canada. The introduction of the federal Transportation of Dangerous Goods Act (TDGA) controls interprovincial and international movement of PCBs and other hazardous wastes. Within provinces parallel legislation controls the transportation of these wastes.

Each province has a different way of dealing with PCBs and other hazardous wastes. Where provinces do not have legislation to deal with PCBs, federal guidelines have been used instead. All provinces have legislation implementing the federal Transportation of Dangerous Goods Act.

Federal Legislation

To control chemicals entering the environment, the Federal government created the Environmental Contaminants Act in 1976. Under this Act, the following

MONS 225196

regulations have been implemented to control the use, sale and dispersal of PCBs and contaminated materials.

Chlorobiphenyl Regulations No. 1 (1977)

This regulation restricts the use of PCBs to only electrical equipment (e.g. transformers and capacitors), heat transfer equipment, hydraulic equipment and vapour diffusion pumps already in service, and prohibits PCB use in all new equipment manufactured or imported thereafter, except for electrical capacitors, transformers and associated switchgear.

Chlorobiphenyl Regulations No. 1 Amendment (1980)

This amendment restricts PCB use to existing electrical equipment by prohibiting the import or manufacture of any PCB-filled equipment; prohibits the use of any PCB-filled electromagnets over food or feed; and prohibits the use of PCBs as a new filling or make-up fluid in any equipment.

Chlorobiphenyl Regulations No. 2 (1985)

This regulation, effective since August 1, 1985, sets a maximum concentration of 50 ppm by weight of chlorobiphenyls that may be contained in specified electrical equipment at the time it is imported, manufactured or knowingly offered for sale.

Chlorobiphenyl Regulations No. 3 (1985)

This regulation, effective since August 1, 1985, sets one gram per day as the maximum quantity of chlorobiphenyl that may be willfully released into the Canadian environment in the course of commercial, manufacturing and processing activities involving specified equipment; and 50 ppm by weight as general release prohibition.

Regulations under the Federal Transportation of Dangerous Goods Act came into effect on July 1, 1985. The regulations increased control and safety levels in the area of transportation and handling of 98 industrial waste categories and 3,016 goods designated as hazardous wastes. One of these specified wastes is chlorobiphenyls. The TDGA also states that interprovincial or international movement of such waste must be manifested using bills of lading with specific information. Under the Act, Protective Direction No. 1 makes mandatory the use of rigid, leakproof containers to transport PCBs. Articles which cannot be contained in this manner must be drained of PCBs. The container must be secured to the transport vehicle.

Other federal laws, although not used so far to regulate PCBs, are the Ocean Dumping Control Act, the Fisheries Act and the Canada Shipping Act.

Provincial Legislation

Provincial regulations vary from province to province and usually address handling, transportation and storage and occupational safety. Where provincial regulations have not been introduced federal guidelines are followed. Contact your provincial ministry of environment for more information about how PCBs are regulated in your province.

How has industry responded to the PCB problem?

Most companies involved with PCBs are cooperating with government guidelines in order to control PCBs. For example, in 1972, the Monsanto Company in the U.S. voluntarily agreed to limit the sale of PCBs. Canadian electrical manufacturers and utilities have responded to the issue of PCBs by cooperating with government regulations, training programs. Even the transportation industry has implemented the Transportation of Dangerous Goods Act in spite of concerns of possible impacts on liability insurance rates.

Electrical Industry

In order to comply with government regulations, Canadian electrical equipment manufacturers stopped using PCBs in 1980. Electric utilities have cooperated with the federal government's effort to list all PCB-filled equipment, to apply special labelling and to replace equipment in particularly hazardous applications. By implementing a code of good conduct, most electric utilities have been able to implement proper handling procedures, train maintenance staff, build special storage facilities and institute a phase-out program for older PCB contaminated equipment.

Some utilities have adopted accelerated phase-out programs for replacing PCB-filled equipment in such areas as schools, hospitals, sports arenas, etc. Some utilities have also created programs that identify and deal with low level contaminated mineral oil.

Scientists have created substitutes in order to replace PCB-contaminated equipment to eliminate some of the concerns. The most successful substitute to date is silicon oils, which do not pose a health threat and are biodegradable to silica which is the main component of sand. Scientist have had many problems in finding substitutes for PCB use in transformers because of the amount of heat generated.

MONS 225197

Destruction facilities

In order to destroy PCBs to an efficiency rate of 99.9999 per cent, most experts agree that high temperature incineration (1,200°C for a two second dwell time) is required. Along with high temperature furnaces, pollution control scrubbers are needed to remove the hydrogen chloride gas and other compounds that are by-products of combustion.

Chemical treatment of mineral oil contaminated with PCBs provides an alternative to high temperature incineration. Chemical treatment methods are currently used commercially by both private and public sector contractors.

Incineration

Through the combustion process, hydrogen chloride, various oxides and other contaminants are created. Before being released into the atmosphere, these pollutants must be removed from the effluent gases with the use of scrubbers. Solids which are incinerated are completely oxidized. This oxidization turns these solids into an inorganic ash compound.

Incineration, which is an established technology, is used in a variety of waste management applications. For this reason it is a popular choice when destroying high-level PCB waste.

Liquid Injection Incinerators

Liquid injection incinerators burn a support fuel and accept PCB liquid wastes as part of their total fuel requirement. These incinerators will not accept solid products, such as capacitors. To remove hydrogen chloride, which pollutes the atmosphere, these incinerators should be fitted with a flue gas scrubbing system. This is the destruction technology most chosen to destroy high concentration PCB liquid waste such as askarel.

Rotary Kiln Incineration

The rotary kiln, joined together with a liquid injection incinerator, has proven to be one of the most versatile technologies for destroying most hazardous wastes and can also be applied to the destruction of PCB-contaminated waste materials. This incinerator process can destroy both liquid and solid waste materials, but large quantities of solid residues can be produced when solid wastes are incinerated. Emission controls are also required.

Since the rotary kiln incineration method may only partially destroy PCBs, commercial hazardous waste incinerators are often a combination of liquid injection and rotary kiln incinerators.

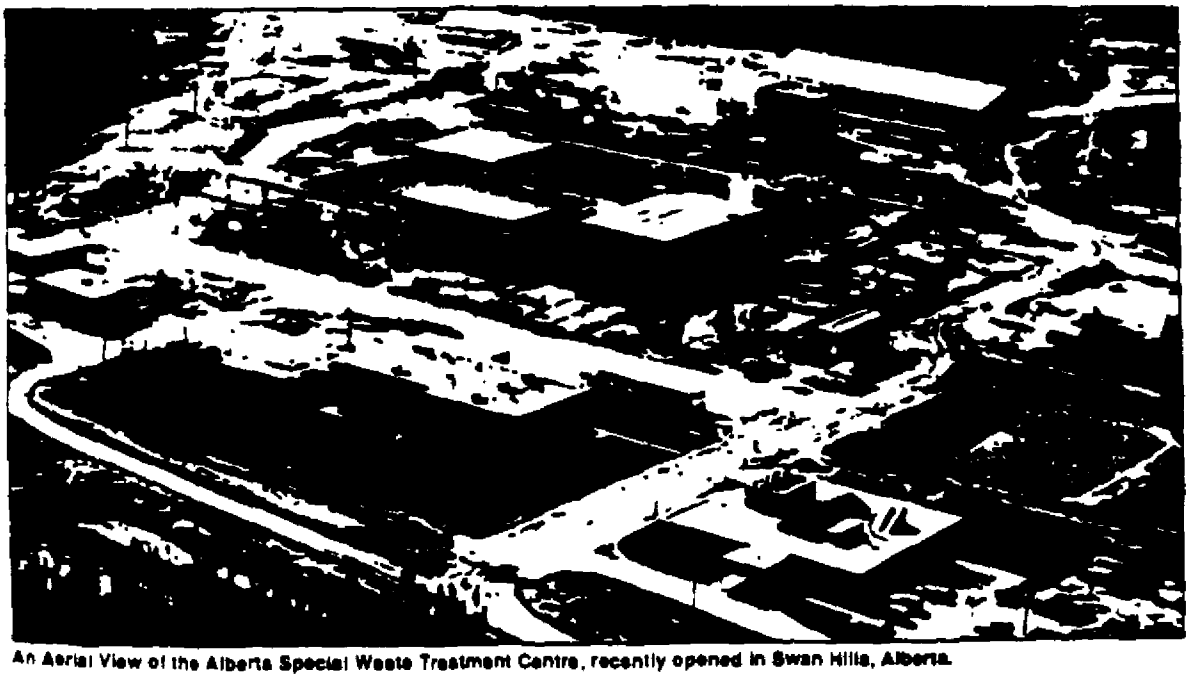

An Aerial View of the Alberta Special Waste Treatment Centre, recently opened in Swan Hills, Alberta.

MONS 225198

High Efficiency Boilers

Coal or oil-fired, high-efficiency boilers, which are commonly used for either steam or electricity generation, can often reach the time and temperature conditions of liquid injection incinerators. The problem is that these boilers do not often have the hydrogen chloride emission controls that are needed.

Thermal destruction

Radiant energy process

The radiant energy process uses heat to induce a chemical reaction within PCBs or between PCBs and another chemical. In order to perform this task heat is created either within the PCB compound or between PCB and another chemical. One such process designed to perform this function is the plasma arc pyrolysis process, has been developed in Canada.

Low temperature Oxidization

Low temperature oxidization processes achieve the same result as high temperature incineration, only at lower temperatures. Other processes still under development which can be used in place of high temperature incineration are catalysts, special oxidants, protracted residence times, or extreme pressure.

Chemical Treatment

Chemical treatment processes use specialized chemical process to destroy the molecular structure of PCBs. One such process is the chemical dechlorination process which uses different chemicals and processes to break down PCB molecules, rearranging them to form otherwise environmentally safe and harmless chemical compounds. Most of the available processes on the market use a sodium compound to remove the chlorine atoms which give PCB molecules their chemical and biological stability. This dechlorination process is used to decontaminate contaminated yet valuable oil, which can then be reused.

Mobile Facilities

Many destruction technologies, including both the incineration and thermal destruction process mentioned above, can be adapted to various transportation devices, thus, making them mobile facilities. Mobile PCB destruction facilities are gaining popular acceptance over permanent facilities. Mobile PCB destruction facilities reduce the transportation risk to one community. Ontario Hydro, Hydro-Québec and several Canadian private sector companies have designed and constructed mobile destruction units for use throughout Canada.



Ontario Hydro's Mobile PCB Decontamination Unit

MONS 225199

PCBs And Emergency Response Personnel

As chemical products and materials become more sophisticated, the response of those charged with handling potential emergencies, normally firefighters, police and other public safety officials, has, as a matter of necessity, kept pace.

Today's fire service industry must be qualified to deal with materials which may be explosive or toxic. A major contributor to this group of potential problems is PCBs.

While there is considerable evidence that PCBs do not pose a serious threat to health from simple and limited exposure, PCBs do pose a serious health problem when they are involved in a fire. This is because of the fact that when PCBs are burned, at even low temperatures, what is given off from the combustion is a highly-toxic substance called "polychlorinated dibenzofurans" (PCDFs). When produced, PCDFs can contaminate the entire burning environment. This by-product of PCB combustion is a health threat if inhaled, and PCDFs can be dangerous in soot and ash even when the fire has been extinguished. To control such emergencies, modern firefighting techniques must be utilized.

The problem is that the resources and experience of fire service and emergency response personnel vary greatly from town to town, city to city and province to province in Canada. For instance, the Toronto Fire Department has considerable experience as well as human and equipment resources to deal with PCB emergencies. But the same cannot be said of every municipal fire department in Canada.

Because of this, many experts believe it should be the responsibility of those who own PCB contaminated equipment and PCB waste to consult with their local fire service in order to assess the department's capability to deal with a PCB emergency. In addition to this, it should be the responsibility of those who own PCB contaminated equipment and PCB waste to inform their local fire department that PCBs do exist on a site, in what volume, and where they are. In other words, an ounce of prevention and preplanning is worth a pound of cure. In the final analysis, communication and cooperation is the key to any successful preplanning effort.

In order to safely and effectively handle any PCB emergency, firefighters should follow three basic procedures: adequate preplanning, specialized equipment, and proper training.

Adequate Preplanning

The procedure of adequate preplanning for a PCB fire includes:

— creating an inventory of PCB-filled equipment owned by the company;

— locate and chart such equipment;

— develop detailed plans for emergency situations. For example, set up a communications centre, and response vehicles to react to the emergency;

— plan in advance firefighting procedures — train personnel how to handle special equipment.

Specialized Equipment

Equipment needed to successfully fight PCB fires includes:

— personal protection units for all personnel that enter the contaminated area;

— breathing apparatus which is designed to work on positive air pressure;

— protective clothing to stop skin contact with contaminated surfaces;

— solvent to wash down equipment, including containment materials such as wood, plastic and rubber.

Training

To successfully deal with PCB fires, proper training and practice is vital but such training is not only for firefighters. To prepare for an emergency response it is suggested that police departments and other emergency personnel should preplan for an incident involving PCBs. Police officers, for instance, may practice isolating an area and setting up a control centre. To treat those exposed to PCDF-contamination, ambulance crews should perform tests on decontamination, giving oxygen and treating any injuries that occurred during the accident.

To make the job of the emergency crews easier, anyone entering a PCB contaminated area should wear protective clothing and equipment. This should be followed by on-site testing to ensure that no PCB by-products are carried away from the scene. If materials cannot be totally decontaminated, they must then be destroyed.

Emergency response teams should also be ready for PCB related emergencies such as spills or leaks. Sealing off an area, plugging leaks, ditching and dyking, and siphoning off contaminants, are all examples of steps that must be taken in any spill or leak involving PCBs.

If a transformer leak is discovered, for instance, emergency crews must lower the leaking unit onto a protective sheet, then do appropriate testing for PCBs.

MONS 225200



Toronto Fire Department simulation exercise conducted to test emergency response capability on HazMat incidents. Fire crews shown here are wearing protective clothing and self-contained breathing apparatus. (Courtesy: Toronto Fire Dept.)



A photo showing a Toronto Fire Department training exercise on plugging a small leak in a drum and personnal protection and disposal methods. (Courtesy Toronto Fire Dept.)

MONS 225201

and if needed, they wrap the transformer in the plastic sheet, then place it in a sealed container. The area should then be cleared of all materials and protective clothing used in the decontamination process. Materials are then stored in leak-proof containers and taken to approved PCB storage facilities to await decontamination or destruction.

Although early anxieties about the health hazards of PCB exposure have been lessened, the identifiable dangers of fires involving PCBs and PCB spills or leaks have resulted in emergency crews developing ways to protect personal property and the public from PCB contamination.

With proper education, equipment and training, crews can arrive at the scene of any PCB accident ready to both safely and effecuvely contain and control any PCB emergency.

Factors Influencing The Phase-out of PCB Contaminated Equipment

Factors which influence the rate at which PCB-contaminated equipment is phased out include intrinsic and liability costs, human relations, and the availability of waste storage and disposal facilities.

Intrinsic costs, which are higher for PCB-contaminated equipment, include the operation, maintenance and protection of PCB electrical equipment. Intrinsic costs also include costs incurred by fires, spills, or explosions, in which PCB-contaminated equipment plays a part. In the past, these liability costs have proven very expensive. As well, any decision to phase out PCB-contaminated equipment may directly relate to occupational health and safety issues raised by different union and management safety committees throughout the country. The availability of waste storage facilities, however, is critical to the process of phasing out PCB-contaminated equipment. Industry experts agree that the phase out of PCB-contaminated equipment could possibly accelerate once adequate storage facilities are established in Canada.

To date, little attempt has been made to verify the cost and other factors associated with the phasing out of PCB-contaminated equipment. It has been anticipated that the method of using PCBs in the public and private sectors might influence the decision-making process related to the phase out of PCB contaminated equipment. External factors, however, could influence what experts call the base case, which relates to equipment which is phased out without regulatory intervention.

Intrinsic Costs

Intrinsic costs include those costs which are incurred by the responsible use of PCB-contaminated equipment. They also include insurance premiums on the equipment itself and the replacement cost of such equipment, should the decision be made to phase out PCB contaminated apparatus.

PCB-contaminated equipment requires specialized maintenance, handling, storage and containment procedures that are generally not required for non-PCB equipment. All PCB-contaminated equipment, for instance, should be stored in metal or concrete containers, and surplus equipment or wastes must be stored in specially designed facilities. These extra-protective measures could incur additional costs to the owner of PCB-contaminated equipment.

It has also been found that intrinsic costs for the operation, maintenance and protection of PCB-contaminated equipment could be higher than for non PCB-contaminated equipment and therefore accelerate phase-out. Depending on a company's investment in operations and maintenance procedures, although incurring a greater immediate cost, a company could lessen potential hazards, thereby possibly eliminating the need and cost of conversion to non-PCB-contaminated equipment.

The cost of replacement could possibly be the most important intrinsic cost factor influencing a company's decision to phase-out PCB-contaminated equipment. These costs might be higher than upgrading existing PCB-contaminated equipment but phase out to non PCB-contaminated apparatus would eliminate the possibility of occurrence liabilities. Intrinsic costs may also vary from plant to plant, depending on equipment maintenance and operation. These intrinsic costs probably tend to accelerate the phase out of equipment that has not been adequately protected from spills, fires, or other potential liabilities.

Liability Costs

The cost for the clean-up of PCB spills varies from occurence to occurence. For instance, an Environment Canada study of PCB releases in British Columbia revealed that costs associated with the cleanup of PCB spills ranged from a few thousand dollars to tens of thousands of dollars. As well, any PCB spill that contaminates the environment could result in prosecution for violation of a number of federal or provincial statutes. For example, a northern B.C. pulpmill was prosecuted in 1977 when it was discovered the mill had

MONS 225202

released PCBs into the Skeena River. Under the Fisheries Act, the mill was charged for this offence and fined severely.

Although normal PCB spills may be costly to clean up and can result in prosecutions or law suits, an even greater liability cost can occur when PCB-contaminated equipment is involved in a building fire. One example is the multi-million dollar clean-up of a PCB-related fire at Binghampton, New York. Another recent fire occurred at Hydro-Québec's research facility (dealt with in detail in this book) in Varennes, Québec. Each of these fires cost millions of dollars for clean up and decontamination.

Human relations is another factor affecting the phase out of PCB-contaminated equipment. The human relations aspect affecting PCB phase out includes industrial health and safety concerns in labour unions as well as the company's public image. This image can be tarnished by any PCB-related accident. There are numerous examples of these types of problems in Canada.

Any company involved in a PCB spill may experience bad publicity and unwanted press coverage from such events as detailed above. For example, the PCB spill on the Trans Canada highway near Kenora, Ontario resulted in bad publicity for all concerned. This spill differed from most in that it occurred entirely in the public domain. Though most spills occur on private property, at sites remote from public access, press coverage is usually quite extensive and damaging to a company's image. An example of this is the 1981 Binghampton, N.Y. PCB spill and fire which resulted in front page headlines from places as far away as Vancouver. The story achieved extensive coverage, especia when it was discovered that many downtown offi towers housed similar transformers.

Spills and cases of open dumping have created a gre demand for proper PCB destruction facilities. T availability of such facilities could help accelerate t phase-out of PCB-filled equipment, especially equi ment that is now in storage. However, destructi facilities would not guarantee an orderly phase-o based on risks to human health or the environmer Most companies should remove PCB-contaminat equipment from service based on operational requir ments rather than on environmental factors.

At present, some provinces have initiated plans establish and operate disposal facilities for hazardou wastes. Alberta has opened a site for destroying PCI at Swan Hills, near Edmonton. As well, a number companies have been operating mobile chemical d contamination units in Ontario, Québec and the Atla tic provinces.

When it comes to PCBs, the story that is gainin acceptance is that the PCB issue is one that has bee recognized by government, industry and environmer talists. But rather than just an acceptance of the prob lem, government and industry, management an labour, health and emergency personnel are workin together and finding solutions. The proof of this effor is in the continuing decline of PCBs in our environmen Through research, education, regulation and destruc tion technology, the PCB issue and its resolution ma one day become an example of how best to deal wit more hazardous chemical threats to our environment

MONS 225203

Part 2

Proceedings From the 1987 Industry and PCBs Forum

MONS 225204

PCBs and the Public

Wallace Read
President
Canadian Electrical Association

On behalf of the Canadian Electrical Association, I would like to tell all of you here today how pleased we are to be co-sponsoring this seminar with the Canadian Electricity Forum. I would like to take a few moments to share with you some of my thoughts about this kind of forum in general and PCBs in particular.

Forums such as this one look beyond the black and white of regulations into the "how to" of solving industry's problem in meeting regulatory requirements in an efficient, cost-effective manner.

Environment Canada and their provincial colleagues are responsible for developing and enforcing regulations, but it's at forums such as this one that we are able to explore the science underpinning the regulations and find practical ways of meeting regulatory requirements.

I hope that out of today's process will come a better understanding of why PCBs have developed a reputation far worse than is merited in science, but equally, why we remain committed to removing them as an environmental factor. One point I would like to stress is that we all have a responsibility to see that the public is better informed on PCBs. Let's not fool ourselves, the issue has not blown over since Kenora. It may no longer be at the top of the national agenda, but a glance at some of the local papers across this country yields a picture of a public still being misinformed.

A recent story in the Winnipeg Sun described PCBs as being linked to cancer, with a bold headline declaring "11 SCHOOLS WARNED ABOUT PCBs." A story out of Smithville, Ontario, "PCB SCARE WILL LIMIT WATER USE," said that PCBs cause birth defects, liver, skin and kidney disorders, as well as cancer. One of my favorites was a large headline that appeared in The Toronto Sun not so long ago proclaiming "FEARS MOUNT· PCB RAGS MOVED TO LAKEFRONT": that was about moving the storage location of two sealed 45-gallon drums containing rags, gloves and clothes that had been contaminated with PCBs.

Research over the past few years has provided us with a great deal of information about health effects relating to PCBs. And you have heard from Dr. Safe today that PCBs are not the serious health hazard once feared. One of the challenges we all face lies in getting that message across to the public at large. It is in our interest to educate the public about PCBs because their concerns are reflected back in the regulatory environment under which we must all operate. We do not need another Kenora, bringing with it another round of media and public hysteria.

If Kenora taught us one thing, it taught us that scientific facts are far less powerful than popular myths in a "crisis". Once public anxiety is aroused, it is fed and reflected back by frequently ill-informed media coverage and it causes public authorities to have little choice but to take "dramatic" measures consistent with the concern in evidence. Ripping up roads in Northern Ontario is a classic example.

We were negligent in more than our shipping procedures. We were negligent in our duty to establish the facts in the face of a hostile audience, and this simply made a bad situation far worse.

Now, for those of you who think the crisis is past, you heard me recite a couple of "FEAR MAKES NEWS" headlines a little earlier. Well these are not isolated examples. I have file folders full of similarly inaccurate sensational nonsense. Why? Because we still haven't

MONS 225205

even reached the media with the facts. Their archives are full of inaccurate and frightening stories, so when something happens and they research the background for their stories, up pops all the historical inaccuracies. This "archives"" problem is made worse by the rapidity with which journalists change beats. It is not enough to get the facts across to today's environment or energy writer, we must make sure his or her editor and successors are kept up to date. It is not an easy task, but it is a necessary one.

CEA has taken some initiatives to address the lack of public awareness of the real PCB story. One of those initiatives is the production of two videos, one for public safety officials and the other for the general public. These videos highlight the current scientific view of the health and environmental effects of PCBs based on recent research and feature some of this seminar's key participants. We have distributed these videos widely in Canada through our member utilities to complement their own educational programs. Public interest groups, media, firemen and policemen have all been addressed through this mechanism.

This seminar itself is a useful component in our public education initiative. The group here is not very representative of the public at large, but all of us will leave here today with a better understanding of PCBs. And all of us will have an opportunity to spread the message we have learned.

In fact, probably the most important thing you can do, beyond the good management techniques you will learn here today, is to ensure your colleagues and the public you come in contact with, even the media in your area, are brought up to date on PCBs. Tell them what you know and where they can get the facts for themselves.

Finally, let me just say something about the guys caught in the muddle, those much maligned public servants in charge of environmental regulations. They get yelled at by everyone; by industry for being too strict, by public lobby groups for being too soft, by their ministers for getting them in hot water. They have a tough job to do and a heavy responsibility. Instead of dumping on them, let's do our part to improve the climate of understanding within which we all have to work. By making sure the facts are broadly understood we reduce public hysteria and fear and encourage sound environmental legislation. It's tougher and more expensive than just "bitching", but it works. And all Canadians will benefit from it.

But who is to blame for all this nonsense? The media? Government? I'm afraid not. It is always convenient to blame the messenger or point the finger at government for not pulling our chestnuts out of the fire. The fact remains that we, the users of PCBs, had not taken steps to see that the public understood the facts on this controversial issue. We had not even taken our data to the media to help them get a better handle on the current science on PCBs. Basically, we stuck our heads in the sand collectively and hoped the whole mess would not fall off the back of someone's truck and land on the front pages across Canada.

This seminar, with The Canadian Electricity Forum, is the first of what will be a series that will focus on topics of concern to our industry. I can think of no environment more suited to getting the facts on the table than one in which government officials, scientists, utility representatives and their customers are included. Seminars are a forum for debate, an opportunity for all of us to expand our knowledge, and are useful in identifying areas where more research is required. Most importantly, they help to get the facts out — where they belong.

MONS 225206

Health Effects of PCBs and Related Substances

Stephen H. Safe, Kathy Farrell, Roy Bannister, Michael Kelley, Stelvio Bandiera and Grant Mason
Veterinary Physiology and Pharmacology
Texas A&M University

Polychlorinated biphenyls (PCBs), dibenzo-p-dioxins (PCDDs) and dibenzofurans (PCDFs) are halogenated aromatic chemicals which have been used as industrial compounds (PCBs), or have been identified as by-products in the production of organic compounds or their combustion (PCBs, PCDDs and PCDFs) (1,2).

These chemicals are characterized by their chemical stability, resistance to chemical and biological breakdown and high lipophilicity. These chemical properties contribute to the adverse environmental effects of the class of compounds which have been widely identified in the global ecosystem and preferentially bioconcentrate in fish, wildlife and humans (3). Since commercial PCBs are complex mixtures of isomers and congeners, it is not surprising that the PCB composition of extracts from environmental samples and occupationally exposed humans is also complex.

Moreover, it is also apparent that the relative composition of the individual PCB compounds which have been identified in various matrices are highly variable and do not resemble the distribution patterns observed for the commercial PCB products (4). It is apparent from several studies that the environmental persistence and bioaccumulation of individual PCBs are dependent on several factors, including their degree of chlorination, lipophilicity volatility and biodegradability. Hazard assessment of commercial and environmental PCB mixtures requires analytical data on the composition of these mixtures and the toxicology of individual PCB isomers and congeners and their interactive effects.

PCBs and Related Halogenated Aryl Hydrocarbons — Toxicology and Structure — Activity Relationships (SARs)

Toxicology

Although the acute LD50 values for commercial PCB mixtures are relatively high, it is apparent from subacute and chronic exposures studies that much lower dose levels of some PCB mixtures elicit diverse biologic and toxic effects which include (2). 1. the development of skin lesions (which resemble human chloracne) in several laboratory animal species and humans, 2. immunotoxic effects; 3. a wasting syndrome, 4 reproductive and fetal toxicity; 5 carcinogenesis (initiation and promotion); 6. porphyria and hepatotoxicity; 7. the induction of diverse drug-metabolizing enzymes including aryl hydrocarbon hydroxylase (AHH), a cytochrome P-450-dependent mono-oxygenase enzyme.

It was also evident that the spectrum of toxic effects elicited by PCBs quantitatively were similar to those observed after treatment with several related classes of halogenated aryl hydrocarbons which include the dibenzofurans (PCDFs) (2,5). Several studies with individual PCBs indicated that the three most toxic PCB congeners, namely, 3, 3', 4, 4'-tetra-, 3, 3', 4, 4', 5-penta, and 3, 3', 4, 4', 5, 5'-hexachlorobiphenyl are minor to trace components of the commercial PCB formulations and are unlikely to be the sole contributors to the toxicity of these mixture (2,4) Our research has focused on the identification of the toxic PCBs, the determination of their presence or absence in commercial and environmental PCB mixtures and the use of this data to develop risk-assessment of PCBs.

MONS 225207

PCBs — SARs

The observed correlation between the toxicity and the AHH induction potencies for the toxic halogenated aryl hydrocarbons suggests that the induction assay can be used as indicator of potential PCB toxicity. Our research initially focused on the activity of PCBs as inducers of AHH in immature male Wistar rats, and rat hepatoma H-4-II E cells in culture. A comprehensive study of all 209 PCBs was not feasible.

However, several reports indicated that the most potent AHH inducers are substituted at both para and two or more meta positions. Initial studies confirmed that only 4 of these compounds (3,3',4,4'-tetra-, 3,4,4',5-tetra-, 3,3',4,4',5-penta- and 3,3',4,4',5,5'-hexachlorobiphenyl) induced AHH and its associated cytochrome P-450 isozyme and elicited the toxic effects associated with halogenated aryl hydrocarbons. In subsequent research we synthesized and reported the biologic and toxic effects of all the monoortho chloro-substituted analogs of the four highly toxic coplanar PCBs. The results demonstrated that this group of eight PCB congeners elicited a spectrum of biologic and toxic effects comparable to these observed for the coplanar PCBsalthough it was apparent that the introduction of the ortho-chloro substituent substantially reduced the activity of these compounds (2,6). The monoortho coplanar PCBs have been identified in the commercial PCBs and environmental extracts and appear to be the major toxic components of these mixtures (4).

PCBs — Human Toxicology

Human populations have been exposed to PCBs and PBBs via three major pathways, i.e., environmental, occupational and accidental. The effects of PCBs and PBBs on humans have been determined by studying the occupationally and accidentally exposed individuals, since it has been acknowledged that these two groups have been exposed to the highest levels of PCBs. The major effects and symptoms observed during the Yusho poisoning in Japan and Taiwan include chloracne and several related dermal changes, ocular damage, increased serum triglycerides, reproductive problems, alterations in steroid metabolism, increased serum (and adipose tissue) levels of PCBs, and immunologic effects (7). In contrast, only a few of these symptoms have been noted in the occupationally exposed workers. It is not clear why this latter group does not present more severe symptoms of PCB poisoning since the serum levels of workers exposed to PCBs are comparable and often higher than the levels observed in victims of accidental poisonings.

The toxic Yusho oil contained a mixture of polychlorinated biphenyls (PCBs) which were contaminated by other halogenated aromatics including the highly toxic PCDFs. It has been reported (7,8) that the PCBs and PCDFs which persist in the liver of victims still suffering from Yusho poisoning include the following compounds: 2,3',4,4',5-penta-, 2,2',4,4',5,5'-2,2'3',4,4',5- and 2,3,3',4,4',5-hexa, 2,2',3,4,4',5,5'- and 2,2',3,3',4,4',5-heptachlorobiphenyls and the 2,3,7,8-tetra-, 1,2,4,7,8-, 1,2,4,7,8-, 1,2,3,7,8- and 2,3,4,7,8-penta- and 1,2,3,4,7,8-hexachlorodibenzofurans.

All of these PCBs and PCDFs have been synthesized in my laboratory and reconstituted to approximate their composition in human liver (8). A comparison of the dose-response effects of the reconstituted PCB and PCDF mixtures in causing weight loss, thymic atrophy and the induction of cytochrome P-448-dependent monooxygenases indicated that the PCDF mixture was at least 700 times more active than the PCBs. Since the ratio of PCBs/PCDFs persisting in Yusho parents' blood and liver was less than 600:1 and 5:1 respecuvely, the results suggest that the PCDFs are the major etiologic agent in Yusho poisoning.

Comparable studies on the toxicity of the PCB and PCDF fractions isolated from Yusho oil confirm that the PCDFs were by far the most toxic fraction present and must make the major contribution to the toxicity of the contaminated rice oil (9). These results explain the toxic response differences in the Yusho and occupationally exposed humans. Yusho oil contained relatively high levels of toxic PCDFs whereas most commercial PCBs contain lower levels of these toxic impurities. Based on these results, risk assessment of environmental PCB exposure should be extrapolated from epidemiologic evaluation of occupationally exposed individuals. Since workers exposed to high levels of PCBs exhibit relatively few adverse health effects, this would suggest that the potential adverse human health effects resulting from environmental exposure to PCBs are very low.

References

(1) O. Hutzinger, S. Safe, and V. Zitko. *The Chemistry of PCBs*; Cleveland, Ohio, CRC Press, 1974

(2) S. Safe. "Polychlorinated biphenyls (PCBs) and polybrominated biphenyls (PBBs), biochemistry toxi-

MONS 225208

cology and mechanism of action". *CRC Crit Rev. Toxicol.*, V. 13, pp. 319-394, 1984.

(3) S. Safe. "Halogenated hydrocarbons and aryl hydrocarbons identified in human tissues", *J Toxicol Environ Chem. Rev*, Vol. 5, pp. 153-165, 1982.

(4) S Safe, L. Safe and M Mullin. "Polychlorinated biphenyls (PCBs) - congener-specific analysis of a commercial mixture and a human milk extract", *J Agric. Food Chem*, Vol. 33, pp. 24-29, 1985.

(5) S Safe. "Comparative toxicology and mechanism of action of polychlorinated dibenzo-p-dioxins and dibenzofurans", *Ann. Rev. Pharmacol. Toxicol*, Vol. 26, pp 371-379, 1986.

(6) S. Safe, S. Bandiera, T. Sawyer, L. Robertson, A. Parkinson, P.E. Thomas, D. Ryan, L M Reik, W Levin, M.A. Denomme, and T. Fujita. "PCBs Structure-function relationships and mechanism of action" *Environ Health Perspect.*, Vol. 60, pp. 47-50, 1985

(7) M. Kuratsune and R.E. Shapuro (Editors) *PCB Poisoning in Japan and Taiwan*, New York, Alan R Liss, Inc., 1984

(8) S. Bandiera, K. Farrell, G. Mason, M. Kelley, M Romkes, R. Bannister, and S. Safe. "Comparative toxicities of the polychlorinated dibenzofuran (PCDF) and biphenyl (PCB) mixtures which persist in Yusho victims", *Chemosphere*, Vol. 13, pp. 507-512, 1984

(9) N. Kunita, T. Kashimato, H. Miyato, S Fukushima, S. Hori and H. Obana. "Causal agents of Yusho", *Amer. J. Ind. Med.*, Vol. 5, pp. 45-58, 1984

MONS 225209

PCB Residue in Foods and Human Tissue

Donald L. Grant, Jos Mes, and Norman McEwen,
Health Protection Branch, Food Directorate,
Bureau of Chemical Safety
Health and Welfare Canada

Today, I would like to bring to your attention some of the concerns we at Health and Welfare Canada have had and the actions we have taken to ensure that PCB residues in food are kept to a minimum. Our activities on PCBs go back to the late 1960s when PCBs were first reported to be present in biological media, including man. At that time analytical methodology and toxicity studies were initiated in our laboratories.

Naturally, when we found that Canadians had measurable amounts of PCB residue in their adipose tissue, we set out to determine what role food played in this contamination problem. During the early 1970s, analysis of foods for PCB residues in the Health Protection Branch and Ontario Ministry of Agriculture laboratories showed that cows' milk had a mean and range of 0.15 ppm and 0.006 -1.4 ppm (fat basis), respectively. Domestic and imported cheese had a mean and range of 0.043 ppm and 0.01-0.27 ppm PCB (whole weight), respectively. A national survey of eggs indicated a mean and maximum PCB residue of 0.008 and 0.027 ppm, respectively. A second study of eggs in 1982, produced mean and maximum values of 0.0008 and 0.006 ppm, respectively. Improvements in methodology make comparison of these two egg surveys difficult, but it can be safely concluded that the results do not indicate any increase in PCB residue level with time. Results from the analysis of 80 poultry adipose tissue samples showed only six positives, ranging from 0.029-0.38 ppm PCB. Analysis of fish indicated that marine fish contained PCB residues below one ppm, while fresh water fish from the Great Lakes had residues from 0.01-> 20 ppm (edible portion). Reports on the analysis of beef fat from the five Health Protection Branches laboratories consistently indicated levels below the detection limit of approximately 50 ppb.

In the United States, food packaging materials were identified as possible sources of PCB contamination. Thus, in 1972, a survey of food packaging materials and the food contained in them for PCB residues was carried out. Over 80 per cent of the packaging material samples contained less than one ppm PCB. Only two of the 77 food samples contained more than one ppm PCB.

In 1975, as a result of our toxicological evaluation and residue determination programs, a guideline of two ppm for PCBs in the edible portion of commercial fish was announced in a Health and Welfare Canada news release. Administrative guidelines for PCB residue of 0.2 ppm (fat basis) for dairy products and beef, 0.5 ppm (fat basis) for poultry and 0.1 ppm (whole egg less shell) for eggs were adopted. Recent analyses by Agriculture Canada of over 300 samples each of beef, poultry and pork produced only one value greater than 0.1 ppm PCB (fat basis). The results of recent analysis of foods by the Health Protection Branch are presented in Table 1.

Table 1
PCB Residues (PPM) Found in Selected Foods

Food	Range	Mean
Fish	<0.05-3.07	0.47 (edible portion basis)
Beef	0.03-0.18	0.08 (fat basis)
Pork	0.04-0.05	0.05 (fat basis)
Poultry	0.01-0.06	0.03 (fat basis)
Milk	0.02-0.10	0.04 (fat basis)
Cheese	<0.001-0.09	0.01 (fat basis)
Eggs	0.004-0.03	0.02 (whole egg, less shell)
Cereals	<0.05	<0.05 (product basis)

MONS 225210

How have PCBs entered the environment and in particular the food chain? The combination of their widespread use (Table 2) for over 40 years, resistance to degradation, solubility in lipids, and tendency to accumulate in biological systems are reasons for their ubiquitous nature. Undoubtedly, point sources have played an important role in this universal contamination problem. The use of caulking material containing PCBs in silos was identified as a source of milk contamination in the United States. In 1979, PCB containing transformer oil leaking from a transformer in storage resulted in the contamination of animal fat being salvaged in a slaughterhouse in Billings, Montana. This contaminated animal fat was then incorporated into poultry feed. Some of this contaminated animal fat was imported into British Columbia and a large and costly program by Agriculture Canada and Health and Welfare Canada was necessary to control the problem.

Table 2
Past Use Of Commercial PCBs

- Electrical transformer (large)
- Electrical capacitor (large and small)
- Recycled paper (contaminant)
- Investment casting (import)
- Heat transfer fluid
- Hydraulic fluid
- Lubricant and cutting oil
- Plasticizer
- Adhesive
- Wax extender
- Pesticide extender
- Ink
- Sealant and caulking compound
- Paper coating

As a means to decrease the chance of food and feed becoming contaminated from PCBs from faulty equipment, a federal interdepartmental inspection program was established in 1981 for the food and feed industries. This program has been very successful in increasing the awareness of PCBs in these industries and in bringing potential problems to their attention for correction.

Away from direct discharges, atmospheric transport is considered to be most important for the ubiquitous nature of PCBs.

PCBs are bioconcentrated by most biological systems and are biomagnified in biological systems as they ascend the food chain. Bioconcentration factors in the thousands have been reported for some fish and will be directly related to the fat content of the fish. Decreases in residue levels in fish removed from the PCB source are mostly to dilution through growth. Fish do not have the same capacity as mammals to metabolize and excrete PCBs. The number and position of the chlorine atoms on the biphenyl molecule are very important in determining the extent to which PCB congeners will be metabolized. When two adjacent carbons are not free of chlorine, metabolism is slow.

Poultry were found to have PCB residues in their adipose tissue about 15 times the level of their diet. The levels on a whole weight basis in eggs were approximately one-half the PCB level in their diet. Swine and sheep fed a 20 ppm dietary level of Aroclor 1254 for approximately 90 days had adipose tissue residue in the 30–40 ppm range.

The PCB residue level, on a fat basis in cow's milk, was reported to be about five times the level, on a dry weight basis, in the diet. With Aroclor 1254, steady state was approached in three weeks. Milk fat residues are very responsive to dietary changes in PCB residue levels.

Over the last 20 years, we have monitored the body burden of industrial contaminants such as PCBs in the Canadian population by the analysis of adipose tissue and breast milk. The results of these investigations are summarized in Table 3. The apparent increase of PCB residues in breast milk must be viewed in the light of improved analytical and sample collection techniques over the years. Whereas, in 1975, breast milk was collected during the first five days of lactation, in 1982 only mature milk (weeks three to four) was collected. This change in collection time was reflected in the observed fat content: 2.20 per cent in 1975 and 3.74 per cent in 1982. These results emphasize the importance of comparing PCB residue results in breast milk on a fat basis.

Results of the analysis of human breast milk and adipose tissue for PCB residues in a number of indus-

Table 3
PCB Levels in Breast Milk and Adipose Tissue

	Milk (PPB)		Adipose Tissue (PPB)
	Whole	Fat	Whole
1970	6	—	—
1975	12	545	—
1977	—	—	907
1982	26	647	944

MONS 225211

trialized countries and reported between 1982 and 1986 are presented in Table 4. It can be seen that the data from Canada approximate the mean for the countries. The Health Protection Branch is in the process of conducting another survey of chemical residue in breast milk and adipose tissue.

The "world data" on PCB residues in human milk and adipose tissue reported over a twenty year period are summarized in figures 1 and 2. A number of parameters, including the time of sample collection, local or national sampling, method of analysis and method of calculation, varied from study to study and would account for some of the variability. The number of data points varied from one to nine. Nevertheless, it can be concluded that there has not been an obvious increase in PCB residues over the last 20 years.

In January 1978, the Minister of Health and Welfare Canada convened a committee to "consider whether there are any problems related to the presence of PCBs in human milk". The committee concluded that "there are insufficient toxicological data to define precisely the level of PCBs in human milk that could cause health problems in the suckling infant. However, on the basis of available toxicological data in animals, where levels are above 50 µg/kg (whole milk), the physician should play particular attention to the mother's history, the child's birth weight, general condition and subsequent growth and development in advising the mother concerning breast-feeding"

It can be concluded that PCBs are ubiquitous, persistent, degraded at different rates depending on the congener and biological media, and bioconcentrated and biomagnified in the environment. For these reasons, along with the concern for their toxicity, requires all of us to keep a close watch on what is happening with PCBs in the environment.

Table 4
PCB Levels in Breast Milk And Adipose Tissue

Country	Breast Milk Fat Basis (PPB)	Adipose Tissue Whole Tissue (PPB)
Canada	647	944
Finland	—	260
Germany	2930	—
Holland	—	1270
Sweden	780	—
U.K.	500	900
U.S.A.	970	—

MONS 225212

Decontamination of IREQ's High Voltage Laboratory Following a PCB Fire

J. Castonguay
Institut de recherche d'Hydro-Québec

A fire in a capacitor bank in IREQ's high voltage laboratory resulted in structural damage and widespread PCB and furan contamination throughout the building. A description is presented of the organization which was set up to handle the decontamination and repair work. Details are also included regarding the medical considerations, acceptance criteria, site facilities, protective measures and decontamination techniques.

The decontamination schedule was arranged so that the various parts of the laboratory were returned to normal operation within the shortest possible time without having to wait for the decontamination of the complete building. The office section of the laboratory was reoccupied after three months, the Large Hall after six months and the Annex after 11 months. Simultaneously, with the decontamination operation, an outdoor area was constructed for the testing of power transformers. This area went into production approximately three and a half months after the fire and it continued to function for seven months until testing was resumed in the annex.

Introduction

On November 20, 1984, a large power transformer was being tested inside the Annex of the IREQ's High Voltage Laboratory. Part of the testing circuit consisted of a capacitor bank which was located on the upper floor inside the building. During the tests, an explosion occurred in the capacitor bank. This initial explosion started a fire and further explosions at fairly regular intervals within the capacitor bank. The fire burned for about six hours before it was eventually extinguished, but not before it had destroyed two thirds of the capacitor bank and caused some damage to the laboratory roof and part of the building structure.

The capacitor bank consisted of two types of capacitors: 312 units of 200 kvar each which were insulated with mineral oil, and 168 units of 100 kvar each which were insulated with askarel. A total of 112 askarel units and 213 mineral oil units were destroyed, representing a loss of approximately 670 litres of askarel and 2,560 litres of mineral oil.

At first the smoke, which was very black and dense, was contained within the building, but after two hours it had escaped to the outside by means of a hole in the roof. The laboratory is surrounded by open countryside and the wind direction during the fire was such that escaping smoke was blown away from the few adjacent buildings. The contamination was therefore restricted to the HV Laboratory. During the initial two hours, the smoke was dispersed throughout the laboratory completely filling the Annex, the Large Hall and the interwall/interceiling spaces as shown in Figure 1. The whole building, comprising the Large Hall, Annex office building and basement, representing a total volume of 0.5 million m³ was contaminated.

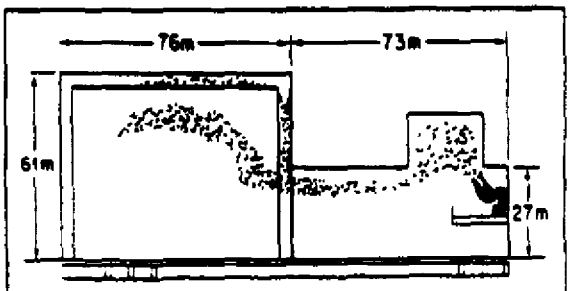

Figure 1: Location of Fire Inside HV Laboratory

MONS 225213

Water was used to fight the fire and it drained into the gravel floor in the basement before slowly percolating in the main storm drain from the laboratory.

Preliminary precautions taken consisted of taking air samples from inside the building about five hours after the initial explosion and checking the PCB content. The level obtained was zero with a limit of detection of 10 $\mu g/m^3$. Activated charcoal filters were placed in the main drain a few hours after the fire was extinguished. In addition, access to the laboratory was strictly controlled and limited to authorized personnel only.

Contamination Levels

After the fire, an inspection of the interior of the building showed that a fine deposit of soot had settled throughout the building in a non-uniform fashion. Soot samples were taken at various locations and analyzed for PCB, PCDF and PCDD content. Typical contamination levels are shown in Table 1. Water samples from the basement were also analyzed and the maximum concentration of PCB found was 1250 ppb of aroclor 1242.

Owing to the PCDF levels found, the building and its contents were considered to be too contaminated to permit an immediate return to normal operation. A major clean-up, repair and decontamination program was therefore organized in order to resume normal activities in the shortest possible time. Since no previous experience of building contamination on this scale existed in Canada, a clean-up and repair organization was therefore established by drawing upon the expertise which already existed in Hydro-Québec in the field of nuclear generating station construction.

Table 1
Typical Contamination Level of Soot Samples µg/g (ppm)

Contaminant	Sample A (1)	Sample B (2)
PCB 1242	2500	1500
Dioxins	—	—
TCDD	0.1	0.1
PCDD	nd	0.1
Furans	—	—
2,3,7,8 TCDF	0.6	nm
TCDF total	4.9	4.0
PCDF	4.8	1.7
HCDF	2.5	0.4

nd: Not detected nm: Not measured
1) Soot collected on floor of Large Hall
2) Soot adhering to steel beams at the 5th floor level

Organization

A mandate for the management and execution for the repair work and decontamination of the building and the contents was given to the Engineering and Construction department of Hydro-Québec. The responsibilities of this group included:

— Preparation of detailed work schedules and cost estimates;

— Engagement and coordination of activities of the various contractors;

— Control of costs, time and materials,

— Engineering and quality control including the measurement of contamination levels,

— Establishing and supervision of safety practices;

— Overall supervision and inspection of all aspects of the work;

— Disposal of contaminated materials.

The administrative structure for the Engineering and Construction group is shown in Figure 2.

In addition, a Coordinating Committee was set up, its responsibilities being:

— Determination of priorities for the repair and decontamination work;

— Establishment of suitable acceptance criteria for the contamination levels of surfaces and air;

— Negotiations with unions, environmental agencies and government safety health authorities;

— Communications with the media (press, television, etc.);

— Establishing of medical examinations and periodic check ups for clean-up crew.

The Coordinating Committee worked in close liaison with the engineering and construction groups.

An Evaluation Committee was also set up to follow the progress of the decontamination by means of regular checking and interpretation of the results of analysis with, when necessary, recommendations concerning

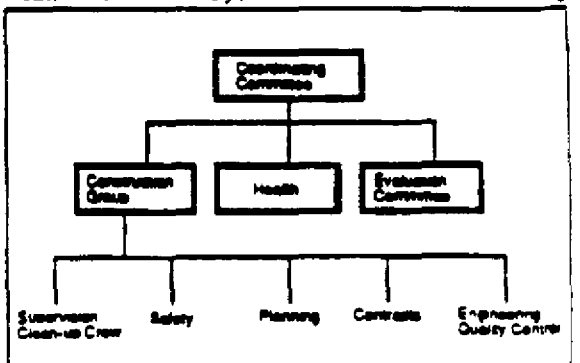

Figure 2: Organizational Structure for Clean-up and Repair

MONS 225214

acceptance or rejection.

Both the Construction Group and Evaluation Committee reported to the Coordinating Committee, which meet once a week, or more often if necessary. At the beginning of the project, there were daily meetings with the representatives of the unions involved to inform them of the nature of the contamination, the medical aspects, the cautions required, etc. Once the decontamination work had commenced, the daily meetings were reduced to weekly meetings at which a member of the Coordinating Committee kept the union representatives up-to-date with the progress of the work. Also, regular bulletins were circulated to all personnel with IREQ to keep them informed of the latest developments pertaining to the project. All communications with the media were channelled through one person in order to maintain consistency of information. The human and public relations aspects of the operation were considered to be of prime importance and contributed significantly to the efficient progress of the entire project.

Medical Aspects

General Medical Considerations

The toxicity of PCBs has been widely studied in the past and the principal health effects are well described in medical literature, although the physio-pathological effects are still under investigation. The toxicity of furans is not as well understood but seem to act like PCBs and dioxins in the organism.

Medical Protocol

For workers and firemen exposed to smoke. This protocol consisted of the following points:

— Determination of previous exposure to PCBs;

— Determination of the extent of the exposure to smoke during the fire;

— Updating a personal clinical history;

— A complete medial examination;

— Biological tests including complete blood count, liver function tests, cholesterol, triglycerides blood tests, plasma protein electrophoresis;

— PCB plasma tests.

This protocol was sent to the medical officers of the five municipalities whose firemen had fought the fire.

The examinations started one week after the fire, and a follow-up was done four months later. The PCB plasma test was repeated only if one or more of the other parameters were abnormal. It was decided to conduct further follow-up tests after one year if one or more of the first series of follow-up tests were abnormal. The medical records will be kept for 30 years.

For Clean-up Workers

This protocol included pre-employment examination and follow-up.

The pre-employment evaluation was performed to evaluate the health status of each worker and to establish work limitations according to the use of protection equipment, especially full face masks.

The follow-up exams were performed after four months of work, and were repeated at the end of the work period. The protocol was sent to the medical officers involved with the clean-up.

Results Of Analysis

For people exposed to smoke during the fire. Of the 47 people exposed to smoke during the fire, 45 were examined and asked to complete a questionnaire; all 47 had blood tests. Twenty-nine of the forty-five workers examined said they had no symptoms at all during the time they were exposed to the smoke or afterwards, the length of their exposure, varying from light to moderate, was between one minute and two hours and 10 minutes. Only once was it described as heavy smoke. All physical examinations and blood tests were normal.

Six workers complained of minor symptoms when exposed to smoke: light coughing, burning of the eyes, burning sensation in nostrils, black nasal discharge. Their exposure was described as light to moderate, varying five to 20 minutes. Their physical examinations and blood tests were normal.

Nine workers complained of one or more symptoms lasting for a minimum of one hour to a maximum of one week after they were exposed to smoke. These symptoms were described as "lack of air" feeling, shortness of breath, burning sensation of the face, redness and dryness of the skin, throat irritation, cough, black sputum, taste disturbance, redness and irritation of eyes and tears. They have been exposed to moderate or heavy smoke from one to six hours. Their physical examinations were normal, except for one who still experienced light dryness and peeling or scaling of skin after one week.

PCB Blood Tests

Blood samples from 47 people who had been exposed to the smoke were analyzed to determine their PCB levels. Samples from a control group of 10 people who had not been exposed were also analyzed.

The plasma was analyzed by an external governmen-

MONS 225215

tal organization called Le Centre de toxicologie du Québec (Québec Centre of Toxicology). The technique used was gas chromatography, and a certain number of plasma specimens were verified by mass spectrometry. The detection limit level for the chromatographic peaks of congeners seen in Askarel 1242, and contained in the capacitors that burned, was 2 µg/L (ppb). Some chromatographic peaks from high congeners seen in Askarel 1260, were discovered in the plasma of workers and controls. The detection limit of Askarel 1260 was 10 µg/L (ppb).

The results of the blood tests are shown in Table 2.

The worker who showed a result of 5 µg/L of Askarel 1242 in plasma was a member of the fire intervention group and had been exposed to the fire for five hours without wearing his respirator. The other members of the group wore their respirators.

Table 2
Results of Blood Tests

PCB Type	No. of Workers	Concentration	Detection Limit
1242	32	nd	2 µg/L
	7	2 µg/L	2 µg/L
	5	3 µg/L	2 µg/L
	1	5 µg/L	2 µg/L
Controls			
	7	nd	2 µg/L
	1	2 µg/L	2 µg/L
	2	3 µg/L	2 µg/L
1260	32	nd	10 µg/L
	10	10 µg/L	10 µg/L
	1	20 µg/L	10 µg/L
	1	30 µg/L	10 µg/L
	1	50 µg/L	10 µg/L
Controls			
	7	nd	—
	2	10 µg/L	10 µg/L
	1	50 µg/L	10 µg/L

Since PCB-1260 was found in the blood of exposed workers and a control group, its presence seems not to be a result of work-related exposure but due either to food contaminating PCBs (fish, for example, retains high-clorine congeners of PCBs), or to contamination of blood during various sampling procedures.

In their follow-up, none of the workers presented any symptoms or physical signs that could be attributed to their exposure to smoke containing PCB, PCDF or PCDD.

For Clean-Up Workers

All the clean-up workers were checked off prior to their assignment. Some are considered unsuitable to wear the protective equipment, especially the full face masks because of:

— Heart or lung disease;
— Glasses (cannot be worn with the mask);
— Facial skin disease;
— Facial configuration causing poor sealing of the mask.

During the clean-up phase, four workers were seen at the first-aid clinic when they complained of symptoms that might have been caused by contact with the soot. One of them experienced dizziness with a taste and smell of sulphur, which lasted between two and three hours. Another, whose mask was not sealed adequately, complained of nausea, throat irritation, sputum and dizziness for two hours. A third worker manifested the swelling of the right eyelid and right side of the face, which got better after four hours. The fourth worker suffered from eczematous dermatitis of the left hand and wrist, which had been in contact of some soot and solvents. After one week of protection, the lesions had disappeared.

The results of the follow-up have all been negative and to date nobody has suffered from any clinical manifestations due to contact with toxic products, except for the four workers listed above; the symptoms they showed are not specific to PCBs and furans and could be due to the soot alone or to the solvents.

Acceptance Criteria

The acceptance criteria for re-entry are similar to those developed by Kim and Hawley for the New York State Department of Health. These criteria were based on the no-observation effect level of 1ng/kg-day of 2,3,7,8 TCDD for laboratory rats. An uncertainty factor of 500 was chosen for humans which resulted in a maximum daily intake of 2pg/kg-day for working days. Three different exposure routes are possible, inhalation, absorption and ingestion.

Evaluation of contamination levels is based on an average body weight of 50 kg (adult female) and a respiratory volume of 10 m^3 during an eight-hour work day. It is also assumed that the worker will be exposed to a constant contamination level 250 days/year for a

MONS 225216

working life of 30 years.

The maximum permissible contamination level for the air is therefore derived as follows:

$$\text{Air} \quad \frac{2\ \text{pg/kg-day} \times 50\ \text{kg}}{10\ \text{m}^3\text{/day}}$$

$$= 10\ \text{pg/m}^3\ \text{TCDD}$$

For surface contamination, Kim and Hawley made various assumptions regarding areas of exposed skin, percentage of contamination absorbed, and percentage from hands and ingested. After review by a panel of experts, a final value of 25 ng/m² TCDD was selected as the guideline by the New York State Department of Health. The value was also selected by IREQ.

Both air and surface levels of contamination must be measured and evaluated graphically by plotting a point on Figure 3. If the point falls within the acceptable zone, re-entry without protective clothing is permitted, otherwise further decontamination and analysis is required.

The concept of 2, 3, 7, 8 TCDD equivalent (or dioxin equivalent) was developed because the various products of decontamination have affected toxicities and, by summating the concentrations of different compounds multiplied by their toxicities relative to 2, 3, 7, 8 TCDD, the toxicities of different mixtures can be expressed by a single number. The formula initially proposed at IREQ was:

Dioxin equivalent = (CDDs) + (CDFs) + (CPBs)
where:
CDDs = (2, 3, 7, 8 - TCDD) + (total PeCDD)/5
CDFs = (total (TCDF + PeCDF + HeCDF))/10
CPBs = (2, 3, 7, 8 - TCBP) + (total PeCPB)/2

It was subsequently found that the dioxin and biphenylene were insignificant and therefore only the furan component was considered in the evaluation of the equivalent dioxin level.

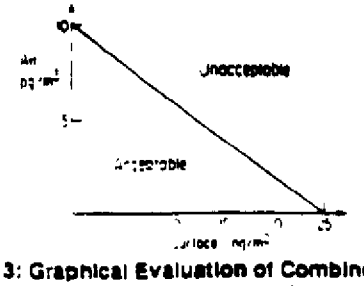

Figure 3: Graphical Evaluation of Combined Air and Surface Contamination Levels

Acceptance criteria for PCB levels in air (in the absence of dioxins and furans) are specified in the Province of Québec by-law and are shown in Table 3 below. However, the Hydro-Québec Health Department has recommended levels which are 1000 times less and, since IREQ is owned and operated by Hydro-Québec, these lower levels were applicable to the High Voltage Laboratory

Table 3
Acceptance Criteria for PCBs in Air

PCB Type	Province of Quebec	Hydro-Quebec (IREQ)
1242	1.0 mg/m³	1.0 µg/m³
1254	0.5 mg/m³	0.5 µg/m³
1260	0.5 mg/m³	0.5 µg/m³

Since no PCB contamination acceptance levels for surface exist, values were calculated as follows:

$$\text{Assumed toxicity ratio (air)} = \frac{\text{Acceptance levels of PCBs}}{\text{Acceptance level of dioxin equivalent}}$$

$$= \frac{1\ \mu\text{g/m}^3}{10\ \text{pg/m}^3}$$

$$= \frac{100{,}000}{1} \quad \text{for PCB 1242}$$

OR

$$= \frac{50{,}000}{1} \quad \text{for PCBs 1254 and 1260}$$

PCB surface contamination levels:

$$\frac{25\ \text{ng/m}^2 \times 100{,}000}{(\text{or} \times 80{,}000)}$$

$= 2.5\ \text{mg/m}^2$ for 1242
$= 1.25\ \text{mg/m}^2$ for 1254
$= 1.24\ \text{mg/m}^2$ for 1260

Several thousands of surface contamination samples were taken for analysis work during clean-up work and, since the determination of dioxin and furan levels take longer to perform and are more expensive than for PCBs, a simplified procedure was adopted. This procedure was based on the fact that the only PCB involved in the manufacture of the capacitors was type 1242. Thus ratio R was defined as:

$$R = \frac{\text{PCB 1242 concentration}}{\text{dioxin equivalent concentration}}$$

MONS 225217

The dioxin-equivalent level for surfaces was calculated by dividing the measured concentration of PCB-1242 by the factor R. A value of R = 1,000 was determined for many measurements made in soot samples.

In practice, the surface contamination level of PCB 1242 was measured and the actions taken are indicated in Table 4

Table 4
Procedures to be adopted following decontamination of surface contamination level

If measured PCB level > R x 25ng/m² dioxin-equivalent:
a) Clean again and repeat sampling analysis, or
b) Check level of furans; or
c) Determined origins of substances identified and consider other factors that could explain the presence of PCBs before taking any action (i.e. presence of PCBs inherent in manufacturing process).

If measured PCB levels < R x 25 ng/m² dioxin-equivalent:
The surface is acceptable.

The dioxin-equivalent for air was measured directly, since a corresponding ratio to R could not be determined.

Sampling Techniques

Surface Contamination

A wet-wipe sampling procedure was used to determine the residual contamination level on surfaces which had been cleaned. A predetermined area of (0.25m² to 1.0m²) was marked out by means of masking tape and a clean absorbent gauze pad (Johnson and Johnson steripad) was dampened with hexane and used to carefully wipe the measured surface in two orthagonal directions. The pad was then sealed in a clean jar and sent to an independent laboratory for gas chromatograph analysis.

Previous experimental results indicated that the wet-wipe method is about three times more effective than dry skin than collecting chemicals from contaminated surfaces. Therefore, when determining the dioxin-equivalent value for a given sample, the measured value was divided by three to obtain the final value.

Air Contamination

The contamination levels of the air were determined by passing specific volumes at controlled flow rates through special absorbent filters.

A high-volume sampling device developed by the New York State Department of Health was used to obtain samples for PCDF, PCDD and PCBP analysis

It consisted of two stages: a microfiber filter for collecting particulates, followed by an absorption section containing glass wool and silica gel. During sampling, the air flow rate was adjusted to approximately 20 L/min. The sampling time was 120 h, which resulted in a total volume of 144 m³ for each sample The detection limit was 1pg/m³.

The sampling for PCB levels was performed by passing the air through Florisil tubes. The flow rate was approximately 1 L/min, and a total volume of 1.4 m³ was passed through a device requiring 20-24 h for each sample. The detection limit was 0.005 µg/m³. PCB samples and PCDF, PCDD, and PCBP samples were taken simultaneously using the same vacuum pump

Since measurements of PCB concentrations were faster and cheaper to perform than those of dioxin-equivalents, they were used for checking the effectiveness of the cleaning operations during the initial and intermediate stages of the project. However, final-acceptance decisions were based on measurements of dioxin-equivalent concentrations. The margin of uncertainty guaranteed by the laboratory handling most of the samples was 25 per cent for PCB analysis and 50 per cent for the PCDD and PCDF analysis, a precision which is considered acceptable for this type of measurement.

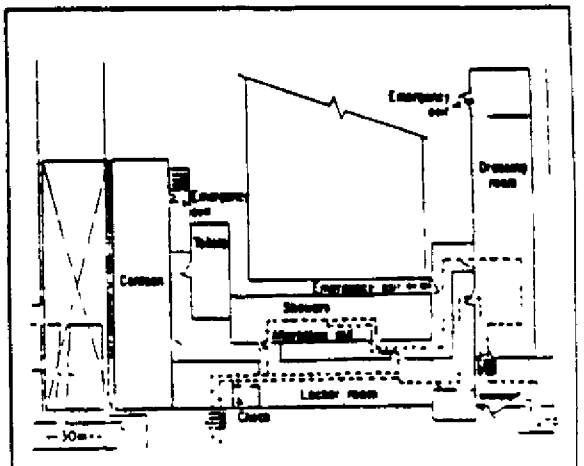

Figure 4: Layout of Site Facilities

MONS 225218

Site Facilities and Protective Measures

To provide comfortable facilities for the repair and clean-up crews, a complex of large trailers was installed adjacent to one of the doors into the laboratory. Referred to as "the Village", this complex contained a locker room for clothing, toilets, showers, canteen, changing rooms and a store for the issuing of protective clothing. The layout is shown in Figure 4. The Village facilities were adequate to cater to 100 men every 24h.

A security officer was on duty at all times and personnel entering the building had to surrender their identification cards and sign in. Visitors also had to sign in and, in addition, had to be accompanied by an authorized employee who was responsible for assuring that they did not remove their masks or any protective clothing while inside the building, or accidentally stray from a contaminated zone into one which had already been decontaminated.

Protective Measures

Seminars were organized for all employees involved in the repair and decontamination work. These seminars covered the nature of the contamination, the necessary precautions, how to put on protective clothing and, more importantly, how to take off protective clothing without causing skin contact with surfaces which had been exposed to contamination. After attending the seminars, employees were given identification cards which permitted them to enter the laboratory without restriction.

People working on the clean-up of the laboratory had to wear special protective equipment, to prevent any absorption or inhalation of PCBs or furans. Contact with the soot was prevented by wearing a disposable cover-all, complete with hood, made of a non-woven material of spun-bonded polyethylene fibres. Polyvinylchloride gloves with surgical gloves underneath, and rubber boots were also worn. To prevent contact with liquid PCBs and solvents, an impervious suit was worn instead. After use, the suit was decontaminated and re-used.

The inhalation of toxic products was prevented by using a full-face respirator with high-efficiency cartridges to protect against vapours and dust particles (more than 99.97 per cent for DOP particles of 0.3 µm). The protection factor for the full-face respirator is considered to be 50, according to NIOSH. The protection factor is the ratio of the contaminant concentrations outside and inside the respirator; it takes into account the air tightness, capacity of the mask and the cartridge efficiency.

Once the contaminant concentrations in the air were lowered to acceptable levels, half-masks were used. These masks had vapour and dust cartridges with a filtration efficiency of more than 99 per cent for silica dust particles of 0.4 to 0.6 µm. The protection factor for the half-mask is 10, according to NIOSH. The half-mask was worn with protective glasses.

To prevent absorption by ingestion, workers had to wash their hands and faces before meals. To prevent contamination of their homes, they all took showers at the end of a shift.

Cleaning and Decontamination Methods

Several cleaning methods were employed in this project to decontaminate the building and the thousands of components and pieces of equipment there. The methods were selected for their compatibility with the contaminated materials. For each given material, an attempt was made to optimize the cost of the cleaning method by:

— Choosing a method that maximized the efficiency of the cleaning equipment;
— Using appropriate solvents;
— Minimizing the quantity of solid and liquid wastes.

The methods selected are described below:

Vacuuming

This cleaning method constitutes a means of collecting most of the dry contaminated soot, and was particularly efficient for all horizontal and vertical surfaces of the Large Hall, as well as the floors and the catwalks in the Annex. In the Large Hall, in fact, and in other places where the soot was dry, this method proved quite adequate for cleaning all the vertical and horizontal surfaces of the walls to an acceptable contamination level.

The cleaning equipment employed (brushes, etc.) were attached to 6 cm and 15 cm pipes which were connected to high-capacity vacuum trucks (100 m^3/min. at 0.45 m Hg) equipped with filter bags (0.25 µm). As many as three such trucks were in use at the same time. The air exhaust from the vacuum trucks was connected to an activated charcoal filter system which absorbed the very fine particles and vapours of the PCBs and furans.

The soot and dust collected were transferred from the vacuum trucks to hermetically sealed containers in conformity with the regulations governing hazardous wastes.

MONS 225219

Cleaning With Solvent and Water Jet Rinsing

This method was used mainly for cleaning the soot from non-porous surfaces that could not be cleaned by the vacuum method. In some cases, it was used directly, without previous vacuuming. In particular, the steel structure and walls of the Annex and several pieces of equipment both in the Annex and the Large Hall were decontaminated in this way.

The method consisted of applying a solvent with an air nozzle. A compound was added to the solvent to produce a surface-adherent foam. After a few minutes, the solvent was rinsed off with a jet of water (approximately 1000 psi, 7 gpm). Some of the equipment cleaned this way was then air-dried.

With this method, care had to be taken to protect all electrical and absorbent components. Furthermore, the solvents and water had to be collected and processed at the water treatment plant.

The solvents used for this purpose were selected for their effectiveness and their compatibility with the materials to be cleaned. For example, a phosphoric acid solvent was used for the steel structure and the roof trusses and a mixture of aromatic hydrocarbon, ethylene glycol, cyclohexanol and cyclohexane were used for aluminum, porcelain and a few porous materials such as wood, concrete, etc.

Solvent Cleaning for Electrical Components

Electrical components such as control panels, motors, heating elements, light fixtures, etc. were decontaminated using a non-flammable rapid drying solvent with low dielectric constant and no flash point.

The equipment comprised of a 1-hp paint compressor connected to a spray gun. The operation consisted of spraying the surfaces to be decontaminated until the solvent began to run, the non-evaporated solvent was then wiped off, along with the contamination particles, using a cloth.

This method was used to clean all live electric panels of 600 volts or less. At higher voltage levels, the power was switched off before cleaning.

Wiping

For surfaces where repeat cleaning was necessary and where it was simply impractical to use jets of water, cloths soaked in cyclohexane were used. Small amounts of other industrial cleaning agents were also employed.

The cloth was soaked in the solvent then wrung out. As soon as it was dirty and the soot would no longer come off when rinsed in the solvent, it was discarded. And as soon as the solvent became dark with soot, it too was replaced. Final cleaning was done using clean cloths and clean solvent after which were discarded without being re-used.

The cyclohexane was collected and recycled. The solvent residue was then transferred to sealed containers for storage. The dirty cloths were also placed in hermetically sealed containers.

Freon TF®

Several hundred items of electronic equipment, such as measuring instruments, computers, tape recorders, TV cameras, etc., as well as thousands of valuable documents including operating manuals, test reports and oscillograms, were contaminated by the fire. Due to the high cost, importance and irreplaceable nature of most of the above items, their recuperation was essential. The use of water/detergent mixtures for decontamination was impossible due to the incompatibility of most of the materials used with water.

The cleaning technique adopted was to spray the contaminated surfaces with Freon TF. The spraying was performed inside an enclosed glove-box chamber in which contaminated objects were placed. The Freon was contained within a closed system, and continuously recycled after being purified by means of a series of particulate filters and a distillation unit. The contaminant was continuously transferred to the filters which had to be changed as needed. Purified Freon was always available at the spraying nozzles at 2000 psi.

The decontamination action is the result of the combination of the kinetic energy of the Freon droplets impinging on the contaminated object together with the solvent power of Freon, which has the unique property of not reacting chemically with components or materials commonly found in electrical equipment.

The system was found to be highly effective and particularly efficient in removing contaminants from recessed areas and crevices. It was also useful for the decontamination of many other items such as small tools, cameras, documents, transformers, cables and clothing. Usually several instruments were placed in the glove chamber at the same time. Decontamination took from 5 to 15 minutes per load, depending on the complexity and the number of objects concerned.

Decontamination of Porous Materials

For porous and absorbent materials, such as the fibre

MONS 225220

glass in the Large Hall and the gravel on the basement floor, cleaning consisted of removing the contaminated layer. The thickness of the layer was determined by checking the contamination level at different depths.

Other porous materials such as theacoustic tiles had to be totally scrapped.

Water Jet Cleaning

This method was used mainly for decontaminating scrap materials such as steel, copper, wood, aluminum, wood and polythene before they were disposed of in accordance with the regulations governing non-hazardous waste. This operation took place in a specially arranged area outside the laboratory. The water used for cleaning was collected and processed at the water treatment plant.

The equipment consisted of a high-pressure pump (2000 psi) with a flow rate of 1.5 gpm and a nozzle spraying system.

Decontamination of Protective Clothing

At the height of the decontamination operations, almost 180 people were involved in work that required protective clothing. If all their masks, hats, gloves, boots, etc, had been discarded at the end of the day, the quantity and cost would have been enormous over the seven months it took to decontaminate the laboratory. For economic reasons, therefore, as well as the sake of hygiene, it was decided to decontaminate the workers' protective clothing and re-use it. This also represented a means of minimizing contaminated waste.

At the end of each shift, therefore, the workers deposited their different items of protective clothing in specially identified containers, which were then sent to the decontamination centre set up for this specific purpose.

An alkaline-based detergent was used to remove most of the soot from the shoes and boots which were cleaned with a cyclohexane solution and dried. Hats were simply dipped in cyclohexane and dried. Respirators had to be dismantled and disinfected with alcohol; once they were dry, they were dipped in a cyclohexane solution and dried again before being reassembled and placed in plastic bags.

Hexane wipes were taken at regular intervals to check that different cleaning methods were effective.

The alcohol and cyclohexane were recycled by distillation and the contaminated residue was stored in sealed containers

Comparison of Different Cleaning Techniques

Typical values of contamination levels before and after cleaning are shown in Table 5 below It should be noted that the first cleaning operation did not reduce the contamination to an acceptable level, a second and occasionally third cleaning was performed, sometimes using a different technique.

Table 5
Contamination Levels Before and After Cleaning For Various Decontamination Techniques

Technique	PCB 1242 Contamination Level	
	Before Cleaning	After Cleaning
Vacuum	54.0 µg/m²	3.70 µg/m²
	230.0 µg/m²	37 0 µg/m²
	160.0 µg/m²	68 0 µg/m²
	375.0 µg/m²	39.0 µg/m²
High Pressure	6.0 µg/m²	N D.*
Water Jet	12 x10³ µg/m²	33.0 µg/m²
	108.0 µg/m²	0.03 µg/m²
Low Pressure	37.0 µg/m²	4 40 µg/m²
Water Jet	58.0 µg/m²	7.90 µg/m²
Plus Solvent	—	—
Hand Wipe	—	—
With Cloth	66.0 µg/m²	8.70 µg/m²
Plus Solvent	—	—
Freon TF	129.0 µg/m²	1 50 µg/m²
Layer Removal	9 5 µg/g	1 60 µg/g
Fiberglass	15.5 µg/g	2.00 µg/g

*N.D . Not detectable

Quality Control

The basic aim of the quality control program was to ensure that the results of the decontamination activities fulfilled the criteria established for this project. Those responsible for quality control and the program itself had to have credibility for dealings with unions, environmental agencies and governmental health and safety organizations. The organization of the project was structured in terms of avoiding conflicts of interest. Furthermore, the quality control program was drawn up in such a way as to achieve an optimum ratio between the quality and cost of the work involved. This meant minimizing repeat cleaning, employee complaints, possible work stoppages, legal actions, etc., and their side effects. All quality control data have been filed

MONS 225221

Implementation

The quality control program covered all decontamination-related activities and the efforts it called for were in proportion to the possible outcome of each activity and the efficiency of the methods used

Work Methods

Generally speaking, the work methods were developed and proposed by an outside firm and then checked and balanced by Hydro-Québec's own quality control group. This applied to the decontamination methods drawn up and proposed by the decontamination contractor, the sampling methods suggested by an outside laboratory and PCB, furan, dioxin and biphenyl analysis techniques developed and proposed by other outside laboratories and validated by the Evaluating Committee.

Decontamination Work

The decontamination work was performed by a contractor in accordance with established methods.

Hydro-Québec inspectors carried out daily follow-ups and made usual inspections of the progress of the decontamination work in conformity with the guidelines supplied by the utility's quality control group. An inspector from this group made spot checks to ensure the above-mentioned inspectors were carrying out their task responsibly.

Sampling and Acceptance

As soon as the decontamination work on a piece of equipment or in a particular location was completed, a sampling plan was drawn up by the quality control group's laboratory In the case of locations, the sampling plans were reviewed and approved by the Evaluation Committee.

The sampling was then carried out by the decontamination contractor according to approved methods, in the presence of personnel in the above-mentioned laboratory. The latter assigned numbers to the various samples and completed a description sheet for each one. To keep track of the samples, chain-of-custody forms were prepared and signed by each person handling the sample from the time it was taken to its analysis in the laboratory The sampling methods are described elsewhere in this report.

The samples were analyzed by approved methods by the three laboratories selected. The quality control of the analyses was carried out by Hydro-Québec quality control group laboratory as follows:

— Preparation of duplicate samples, for analysis by the same laboratory;

— Preparation of duplicate samples, for analysis by two different laboratories,

— Preparation of dummy samples, i.e not contaminated;

— Preparation of samples with a known quantity of contaminants for analysis by two different laboratories;

These different controls, which varied in frequency according to the importance of the samples, provided a means of checking the differences in results from one laboratory to another and, also, the degree of accuracy of the various analyses. In the event of wide differences, a case-by-case study was made to pinpoint the cause and find a solution.

The results of the analyses were telexed to Hydro-Québec's quality control group within two working days for the PCBs and 10 days for the dioxin-equivalents. Detailed reports were sent a few days later.

The group's own laboratory then compiled the results, did the necessary calculations, gave the suitable approvals and issued weekly reports. All the results were processed on IREQ's computers.

The results were analyzed by the Evaluating Committee, who then declared whether or not the decontaminated location was acceptable. Their approval was then submitted to a representative of the Coordinating Committee in the presence of union and government representatives.

Decontamination of Cleaning Water

The day after the fire, a water treatment system was installed in order to process the potentially contaminated water in the drains leading from the laboratory and its immediate neighbourhood. The system consisted initially of an oil/PCB absorbent section and an

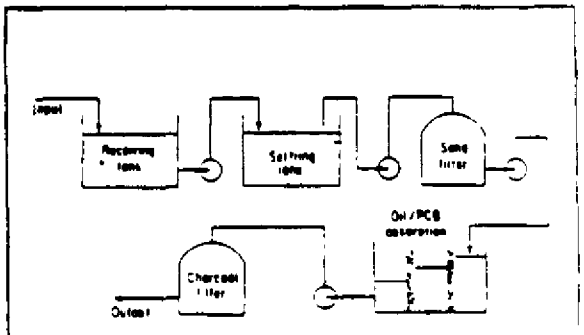

Figure 5: Schematic Diagram of Water Treatment Plant

MONS 225222

activated charcoal filter. Regular sampling and analysis demonstrated that the output water from the system contained less than one ppb of PCB with no detectable levels of dioxins or furans.

After the decontamination of the building and equipment got underway, the water treatment system was modified by adding a settling tank in which the phosphates (from the detergents) were removed and the ph level adjusted to its correct value. A further filtration stage consisting of a sand filter was also added. The complete system is shown in Figure 5.

Approximately two million gallons of water were processed in the water treatment plant. The only contaminated wastes which had to be stored afterwards were the phosphate sediments, the absorbent pads, the sand and charcoal filter elements. By using the water treatment system, the volume of contaminated waste was kept to a minimum.

Disposal of Wastes

Criteria

In Quebec, the disposal of solid and contaminated wastes are governed by law introduced on October 15, 1985. There are essentially two categories of waste and they are classified as either dangerous or non-dangerous. The maximum acceptance criteria for the non-dangerous wastes are presented in Table 6. Wastes having levels above those in Table 6 are classified as dangerous. The method of disposal depends on the classification category.

PCB Waste Disposal Methods

Since, at the time of writing this report, no PCB destruction facilities existed in Quebec or Canada and, also, since the export of such contaminants to the United States for destruction by incineration was prohibited, there was no option but to store the wastes in Quebec until destruction facilities become available here.

Table 6
Maximum Contamination Levels for Non-Dangerous Wastes

	Liquid Wastes mg/L	Lixiviats of Solid Wastes mg/L	Contaminants in Solids mg/g
Total PCB	0.3	0.01	N/A
Tl Furans	2.5×10^{-6}	2.5×10^{-8}	0.01×10^{-3}
Tl Dioxins	2.5×10^{-6}	2.5×10^{-8}	0.01×10^{-3}

Dangerous wastes (i.e. concentrations greater than those in Table 6) had to be placed in sealed containers (usually 45 gallon drums) and were stored at a special site under secure and controlled conditions. The dangerous wastes at IREQ consisted mainly of soot, ashes, gravel, filter elements and sediments, fiberglass, wool, damaged roof materials, disposable clothing and cleaning materials such as rags, brushes, etc. Approximately 3,500 drums of dangerously contaminated materials were accumulated for storage.

The non-dangerous materials consisted mainly of damaged steel panels from the building structures and walls, wooden boxes, ceiling and floor tiles, clothing, firemens' masks, boots, etc. For these materials, various options were available, viz, disposal as scrap metal in the case of the steel sheets, beams, etc. Storage for reuse at a later time in the case of such undamaged materials such as firemens' clothing and masks, and burial at controlled and secure sites in the case of damaged tiles, porcelains, etc. Hydro-Québec decided to bury such materials at a site on its own property even though it had the legal right to use a public site. This was done in order to eliminate the risk that such wastes might become contaminated by waste from other sources if a public site were used. The quantities of non-dangerous wastes were: 75 tons of steel, 300 cubic metres of wood, cardboard, polythene, porcelain and 70 drums of clothing, masks, hoses, etc.

Outdoor Test Area

Among the many clients of IREQ's High Voltage Laboratory is a manufacturer of large high-voltage transformers whose transformers are tested on a production basis before being installed in service. Clearly, it would have been a major disaster for this client to be forced to stockpile his transformers for the nine to 12 months estimated for the completion of the decontamination. A decision was therefore taken to build a temporary outdoor test area devoted exclusively to the testing of transformers. To this end, priority was given to the decontamination of equipment essential for such tests.

The largest item to be decontaminated was a 6.4 MV impulse generator which is 24 m high and weighs 100 tons. The generator was successfully decontaminated and moved outside on air cushions. Many other large items such as high voltage dividers, capacitors, transformers, reactors, etc. were also decontaminated and installed outdoors.

Some specialized instruments, such as high-precision instrument transformers had to be protected against the

MONS 225223

weather and this was achieved by installing them in a tent-like shelter which could be opened when these transformers were in use and closed afterwards. A control room was set up inside a trailer and the measuring instruments used were first decontaminated in the Freon chamber, then re-calibrated before being installed in the measuring system

The outdoor test area went into operation approximately three and a half months after the fire. Many transformers were successfully tested, often in subzero temperatures, snow and ice storms. After six months, the Large Hall was in operation.

Conclusion

— On November 20, 1984, a fire in a capacitor bank at IREQ's High Voltage Laboratory resulted in the loss of 670 litres of askarel and 2560 litres of mineral oil.

— The intensity of the fire was such that much of the askarel decomposed, forming polychlorinated dibenzofurans which were distributed throughout the building in the smoke and caused the widespread contamination of the entire building.

— Within a few hours, an activated charcoal filter was installed from the principal drain in the laboratory and, therefore, prevented the escape of contaminated water (produced during firefighting operation) to the environment.

— A highly efficient organization was set up in a matter of days to deal with all aspects of the repair and decontamination work. In addition, mechanisms were established to keep the involved unions informed about the nature of the problem, protective measures to be employed and medical protocols which would be followed. Also, all communications with the media were channelled through only one person.

— Medical protocols were established to ensure that the clean-up crews were not exposed to dangerous contaminants and that the protective measures were satisfactory. Only four workers exhibited symptoms which could have been caused by contact with toxic products. The symptoms disappeared in periods varying from a few hours to one week The symptoms were not specific to PCBs and furans and could have been caused by exposure to soot alone, or to solvents

— The maximum permissible levels of contamination after cleaning were based on those established by the Public Health Authority of the State of New York and were: for air 10 pg/m^3 and for surfaces 25 pg/m^2 of 2, 3, 7, 8 TCDD or equivalent

— Several different decontamination techniques were used, depending on the nature of the materials and surfaces to be decontaminated. The principal procedures were vacuuming, washing with high pressure water jets, washing with solvents and rinsing with water, spraying with Freon TF and surface layer removal, etc.

— A water treatment plant was installed to remove contaminants from the cleaning water before releasing it to the drains.

— All sampling and analysis of surface and air contamination levels was performed by an independent laboratory.

— An outdoor test area for transformer testing was put into operation approximately three months after the fire.

References

(1) Kim, N. K. and Hawley, J. "Re-entry Guidelines Binghampton. State Office Building," Document 0549P, Bureau of Toxic Substance Assessment Division of Health Risk Control. New York State Department of Health, 1984.

(2) Bellin, J. S. and Barnes, D "Health Hazard Assessment for Chlorinated Dioxins and Dibenzofurans other than 2, 3, 6, 7 TCDD," EPA Report No JB02082, September, 1984.

MONS 225224

PCBs and Government Regulations

Campbell McDonald
Head, Controls Implementation Section
Commercial Chemicals Branch
Environment Canada

A number of federal and provincial laws deal directly or indirectly with contamination of the environment. There are three categories: media-oriented legislation (e.g. Fisheries Act, Clean Air Act), which seeks to control the discharge of pollutants into a given medium, such as water or air; product-oriented legislation (e.g. Hazardous Products Act), which deals with certain products and their constituent chemical components with respect to their hazards to man; and substance-oriented legislation (e.g. Pest Control Products Act, Transportation of Dangerous Goods Act), where the adverse effects of potentially dangerous chemicals are reviewed and appropriate controls may be developed.

Environmental Contaminants Act

The Environmental Contaminants Act is in the third category and provides Environment Canada and Health and Welfare Canada with the power to obtain a systematic overview of the problem of contamination of the environment by a chemical, regardless of source, use, product or type of waste discharge, and to apply appropriate controls, if necessary, in those cases where other legislative authority does not exist or is not used.

The Act has the following characteristics:

1. The focus is upon substances.

2. It is comprehensive. All relevant facets of production, use, disposal and sources of entry of a chemical into the environment can be examined to find out what controls, if any, should be imposed. No special activities are exempt from the ambit of the Act.

3. Because of the comprehensive scope of the Environmental Contaminants Act, its relationship to other laws in the application of controls is defined in the Act itself. It is designed to operate as a backup to other laws, federal or provincial. The control provision is intended to apply only where consultation with other authorities show that they do not intend to implement appropriate controls. The Act is aimed at the commercial use of chemicals. Once chemicals are taken out of commercial use and are destined for the waste stream, provincial agencies become directly responsible for managing the storage, transportation and ultimate disposal of the substance.

Transportation of Dangerous Goods Act and Regulations

In addition to PCB controls under the Environmental Contaminants Act, The federal Transportation of Dangerous Goods Act and Regulations should also be mentioned. This federal and complimentary provincial legislation specify standards and requirements for the safe handling and transporting, by all modes of transportation within Canada, of dangerous goods and hazardous wastes.

The federal Transport of Dangerous Goods Regulations apply to all domestic consignments by air, marine and rail transporation and to all inter-provincial, transborder (Canada and the USA) by road and rail, and international consignments. Provincial regulations apply to road consignments within a province. Federal and provincial regulations also cover safety markings, documentation, packaging, safety and emergency reporting requirements, and training of personnel.

To get back to the Environmental Contaminants Act, there are three PCB regulations in force.

First, the Chlorobiphenyl Regulation No. 1, which came into force on September 1, 1977, prohibits the use

MONS 225225

of PCBs in the operation, servicing or maintenance of any product, machinery or equipment other than electrical capacitors, electrical transformers and associated switchgear and electromagnets, heat transfer equipment, hydraulic equipment and vapour diffusion pumps that were designed to use PCBs and were in use in Canada before September 1, 1977.

These regulations also prohibit the use of PCBs as a constituent of any machinery, equipment or product manufactured in or imported into Canada after September 1,1977, other than electrical capacitors, electrical transformers and associated switchgear.

The PCB Regulation No. 1 was amended on July 1, 1980. The amended regulations prohibit the use of PCBs in the operation of electromagnets that are to handle food or animal feed or anything intended to be added to food or animal feed. They also prohibit the use of PCBs as a constituent of electrical capacitors, transformers and associated electrical equipment manufactured in or imported into Canada after July 1, 1980, thereby banning the use of new PCBs in Canada.

The amended regulations prohibit the use of PCBs in the servicing or maintenance of any product, machinery or equipment, other than electromagnets and electrical transformers.

The final paragraph of the regulations prohibits the use of PCBs as new filling or as make-up fluid in the servicing or maintenance of electromagnets and electrical transformers.

The Chlorobiphenyl Regulations No. 2 is more commonly known as the PCB Product Regulations. These regulations came into effect on August 1, 1985, and prohibit any person from importing, manufacturing or offering for sale any capacitor, transformer, electromagnet, heat transfer equipment, hydraulic equipment or vapour diffusion pump that was designed to use PCBs and that contains PCBs in a concentration exceeding 50 ppm by weight of the liquid in the equipment.

The PCB Product Regulations do not apply to any of this equipment that is offered for sale as a necessary and integral part of an immovable building, plant or structure that is offered for sale, or to any equipment that is imported for destruction of any PCBs contained in the equipment. A final exemption allows for the offering for sale of any of this equipment for destruction or storage awaiting destruction of the PCBs contained in it.

Chlorobiphenyl Regulations No. 3 also came into force on August 1, 1985. These are known as the PCB Release Regulations.

These regulations make it an offence for any person to willfully release or to permit the release of PCBs into the environment under specified conditions

The first condition deals with concentrations PCBs may not be released into the environment in the course of any commercial, manufacturing or processing activity in a concentration exceeding 50 ppm by weight. Two exceptions are specified. The first is an application to a road surface, where the maximum concentration is five ppm.

The second deals with the maximum quantity of PCBs that may be released into the environment in the course of the operation, servicing, maintenance, decommissioning, transportation or storage of any of the equipment that is allowed to contain PCBs. The limit prescribed by the regulation is one gram per day for any one piece of equipment or for any one package of equipment.

The Environmental Contaminants Act Enforcement Strategy

The "Enforcement Strategy" is aimed at the development and implementation of plans and investigative techniques to gather information in order to ensure enforcement of the objectives of the Environmental Contaminants Act to meet the intention of Parliament as embodied in the Act.

Enforcement Rationale

It is incumbent upon Environment Canada to develop and implement measures to protect human health and the environment from substances that contaminate the environment. Consequently, given this mandate, the responsibility for developing and implementing meaningful and effective measures has been taken seriously

Strategies For Enforcement

— Revenue Canada — Customs and Excise

Environment Canada has developed a program, in conjunction with Customs , to monitor the importation into Canada of any and all "scheduled substances" and "listed products" regulated under the Environmental Contaminants Act.

— Interdepartmental and Intergovernmental Inspection Programs

Environment Canada, in conjunction with Heath and Welfare Canada, Agriculture Canada, Fisheries and Oceans Canada and the Canadian Grain Commission,

MONS 225226

has developed and implemented a nation-wide inspection program for PCBs. Participation in this program has been expanded to include the provincial agencies of Health and Labour, Agriculture and Environment in Alberta, Manitoba, Nova Scotia and New Brunswick.

Environment Canada has also developed an ongoing, extensive training program for inspectors, covering a broad range of topics, such as how to identify PCB-contaminated equipment; how to evaluate the condition of PCB equipment, how to assess the potential for PCB contamination of plant products and the environment; and procedures for the effective management of PCB equipment and wastes.

Inspection reports are reviewed by Environment Canada to determine the use, movement, and condition of PCB equipment.

— Notice to Disclose (ss4 (1b))

Frequently, the Department uses the ECA, specifically Subsection 4(1b), to obtain information required to update the PCB inventory. Subsection 4(1b) is also used to obtain specific and detailed information from companies or persons suspected of mishandling or mismanaging PCBs. The type of information which may be requested is:

1) Complete inventory of PCB equipment and or wastes;

2) The movement of PCBs over the last number of months or year; and

3) Notification of the intent to move PCBs.

— Education

PCB training seminars and routine inspections of PCB equipment by Environmental Contaminants Act inspectors are considered to be part of an educational program. Education is truly part of an enforcement strategy, in that knowledge of the ECA, its regulations and the problems associated with use, movement and storage of PCBs will assist in ensuring compliance with federal legislation, thereby reducing enforcement activities.

Enforcement Activities

Environment Canada believes that a pragmatic approach is best suited to the successful achievement of the objectives of the Act and that legal proceedings should be considered only as a last resort. The utilization of a pragmatic approach has the following advantages

1) "Fosters co-operation and mutual trust" by opening channels of communication between industry and government.

2) "Obviates the need to resort to legal proceedings" by obtaining compliance through a practical course of action.

3)"Promotes voluntary corrective measures" which are potentially more effective in terms of resource utilization;

4) Results in "better success at trial", if such becomes necessary, by emphasizing, through concrete evidence, the reasonableness of the government and will undoubtedly provide a crown prosecutor a better chance of success at a trial (if necessitated).

Prosecution Options

The decision to prosecute is of crucial significance to any enforcement program. Legal proceedings can be an expensive and cumbersome procedure in terms of time, money and effort. The resort to legal proceedings can be counter-productive if they are seen as confrontational by industry. We believe that all enforcement options should be carefully canvassed and their respective advantages and disadvantages should be considered before any enforcement is undertaken, and prosecution should be considered an enforcement option that is to be used only as a last resort.

Some examples of grounds for launching a prosecution would include:

1) Repeated violation of a firm, usually despite warnings concerning the possible consequences from ECA enforcement personnel.

2) Obstruction of an inspector.

3) Failure to provide assistance to an inspector, or failure to comply with any section of the Act.

4) Interference with a seizure and tampering with a seized substance or product.

5) An ECA violation has resulted in an economic benefit to the violator and there is need to ensure that a violation will result in a financial loss, i.e., a strong disincentive to violate the ECA.

6) A flagrant violation of the Act or the Regulations

Some examples of reasons for not launching a prosecution would include:

1) The violator does not possess the necessary intent

2) The evidence against the violator is not conclusive enough to warrant the institution of legal proceedings

3) The financial burden involved in prosecuting the violator is too great in view of the expected impact of a conviction on a violator or the degree of probability of success in obtaining a conviction. This financial burden

MONS 225227

would include the costs associated with, intensive field investigation, laboratory testing, preparation of a legal brief for prosecution, witness and court time

4) The violation is very minimal in its effect on the environment, is a first offence and a warning produces an immediate cessation of the illegal use of the scheduled substance involved.

Compliance Program

The Environmental Contaminants Act and the regulations made under the Act are intended to protect the population of Canada and the environment in which they live, from substances that constitute a significant danger to human health or the environment.

The compliance program has been developed to provide a maximum benefit to industry as well as to inspectors designated under the Act. The program is designed to ensure fair and consistent treatment throughout Canada and to provide assistance when required.

Objectives

1. To enforce the Environmental Contaminants Act and the regulation made under the Act. Environment Canada tends to consider "enforcement" as only one small part of the overall compliance program.

2. To develop proper procedures for undertaking surveillance, monitoring and enforcement activities and to apply those procedures in a practical manner. The Department defines "proper procedures" as legally correct procedures and fully recognizes the rights of industry.The compliance program is extremely careful not to encroach upon these rights. Having further recognized that resource utilization is limited, every effort must be made to approach the application of procedures in a "practical manner". In other words, inspection procedures would probably not include undercover activities or reconnaissance flights over industrial installations.

3. To establish a uniform approach to enforcement activities. The compliance program "strives" to ensure fair and consistent treatment in order to prevent the possibility that a company in one part of Canada could be prosecuted for an offence that is overlooked elsewhere Co-operation and mutual trust between industry and governments are very important and, for this reason, inspectors are encouraged to provide assistance when requested.

4. To ensure that industry and governments to whom the Act and Regulations apply achieve a better understanding of the legislation and its applications This objective helps ensure compliance with the Act and Regulations Detailed knowledge of the Act and Regulations will enable industry to identify any equipment presently in use or current activities that may be subject to legal action under The Act to take corrective action

5. To ensure, through advocacy, that the commercial use of PCBs does not pose a threat to human health or the environment. The institution of non-regulatory activities by industry should ensure that any current allowable commercial use of PCBs does not or will not pose a threat to human health or the environment.

Ensuring Compliance

The three main areas of compliance are:

1. Environmental Contaminants Act compliance.
2. PCB regulation compliance; and
3. Non-regulatory compliance activities.

ECA Compliance

To ensure compliance with the Environmental Contaminants Act industry must:

1. Comply with all notices, subsection 4(1b);
2. Provide assistance to inspectors;
3. Not obstruct or hinder an inspector; and
4. Not interfere.

PCB Regulations Compliance

To ensure compliance with PCB regulations No 1 No. 2 and No. 3, industry must.

1. Not purchase any product, machinery or equipment containing PCBs (caveat emptor - let the buyer beware).

2. Not import, manufacture, process, offer for sale or knowingly use PCBs;

3. Not import, manufacture, process, or knowingly offer for sale a product containing PCBs;

4. Not top-up equipment with PCBs;

5. Not offer for sale PCB wastes (unless for approved destruction or storage);

6. Not willfully release or permit the release of PCBs into the environment.

Non-Regulatory Compliance

To ensure non-regulatory compliance with Environment Canada s policies and guidelines for protecting human health and the environment, industry should

1. Not purchase any poorly-maintained PCB equipment;

2. Determine the PCB concentration of all contami

MONS 225228

named mineral oil-filled transformers;

3. Protect equipment by installing safety barriers around any energized or stored transformers that may be subject to vehicular traffic;

4. Protect plant products by installing drip trays or catch basins under PCB capacitors or replace them with non-PCB units; also, packaging materials or equipment that come into direct contact with plant products should not be stored near PCB capacitors or transformers;

5. Protect human health and the environment by installing curbs or catch basins around PCB transformers to restrict the movements of PCBs in the event of a leak or spill; floors should be free of cracks and floor drains should be sealed in the vicinity of PCB equipment; wall/floor interfaces should be tight to provide a leak-proof area;

6. Monitor equipment by developing and implementing an internal PCB equipment inspection program to regularly inspect equipment for leaks or cracks, for rusted or damaged casings and cooling fins, or for improper pressure, temperature and fluid levels; and by reporting to Environment Canada and labelling all PCB equipment found on the premises.

7. Monitor storage of PCBs and equipment to ensure the safe storage by following the recommended guidelines for the safe storage and disposal of PCBs; and by maintaining complete, accurate, and up-to-date in-house records of all PCB equipment or wastes in storage at the facility and/or transfers of PCB equipment and wastes for authorized disposal into or out of the facility.

MONS 225229

PCBs and Legal Liabilities

Ian Motherwell
Assistant General Counsel
Ontario Hydro

I have been asked to discuss with you today the nature of liabilities which could arise in situations where one fails to comply with the numerous statutory requirements which are placed upon society today in the transportation, storage, destruction, handling and containment of the PCBs, employee exposure consequences as well as liabilities which may arise under the law generally. Along the way, I will give an overview on defences to regulatory offences, Spills Bill Liability, Common Law remedies, and some suggestions for minimizing legal exposure.

I should make it clear at the outset that while there are detailed and specific regulations both provincially and federally which treat various aspects of PCBs in a "nuts and bolt" fashion, it is not my intention to weave through the regulations. The legal exposure which will be discussed is not unique to PCBs but could have a similar application to other pollutants.

Another point — various Federal and Provincial Acts have used a myriad of different nomenclature to describe PCBs and other substances which may be or, at least, are perceived to be, hazardous in some way, e.g. "dangerous good", "pollutant", "contaminant". For ease of discussion, these words will be used interchangeably.

Essentially, there are three types of legal exposure which may develop:

1) Regulatory violations (substantive or minor) where the regulator lays charges against an accused under a specific piece of legislation;

2) Special statutory remedies which become available in certain instances — e.g. spills in Ontario; and

3) Normal common law actions.

Regulatory Violations — Sanctions & Defences

Offences under environmental and occupational health and safety legislation can all generally be lumped into the category of what is referred to as "public welfare offences". In these quasi-criminal situations, a conviction can occur even though the accused did not intend to commit the infraction.

It is quite possible that employees individually can be charged in lieu of or, as well as, corporations. Under Ontario's environmental trio of statutes (namely the Pesticides Act, Environmental Protection Act and Ontario Water Resources Act), there has been a significant stiffening of penalties. Currently, draft bills floated under Occupational Health and Safety Act of Ontario and federally, to significantly overhaul the Environmental Contaminants Act (under the new name of the Environmental Protection Act) have caused increased awareness and concern of employees in the workplace regarding their responsibilities. And in turn, the ensuing duty placed on their employer to ensure compliance throughout the Corporation.

I should add that, in addition, an emerging trend is to incorporate a specific statutory duty of care upon officers and directors of corporations to see that they take all reasonable steps to ensure that a pollution offence does not occur. Note that this duty can be breached even where pollution does not happen but a potentially dangerous situation is allowed to exist. Exposure to the statutory duty placed upon directors and officers seems to extend in the case of officers to more than those who may traditionally be thought of as corporate officers of the company but to other people either in the line organization who would have responsibility for the environment or key staff people in the environmental area

MONS 225230

to ensure environmental compliance.

Additionally, in Ontario, different fine structures have set up depending upon whether or not an individual or corporation is convicted and distinguishing between pollution and non-pollution offences; however, in the pollution area, there is even a higher level of fine which can be imposed pertaining to violations involving liquid industrial material or hazardous waste (PCBs fall into the latter category).

These sanctions coupled with an increased emphasis in enforcement of environmental violations over the last 18 months in Ontario has created a distinct awareness amongst industry of the various environmental pieces of legislation

Certain defences are available to an accused even in situations where the offence has been committed. These defences are set out below:

1) Where both the regulator and the accused were seriously mistaken as to a certain factual situation - please note that this does not pertain to an erroneous interpretation of what the law might be but rather a factual situation;

2) Where an act of sabotage occurs — clearly a corporation will not be convicted where the act constituting the offence related to the sole maverick action of an employee or a group of employees, for example, all what may happen in certain vicious strike scenarios;

3) Where an act of God happens — in this respect, courts generally have given a very conservative meaning to an act of God; in other words, it must be a very unusual circumstance;

4) Where due diligence can be shown — this is predicated on the particular fact situation but it must be shown that the corporation took all reasonable steps to avoid the chargeable event — this is something that the defence cannot easily discharge and under the circumstances due diligence could very well be illustrated by showing that the appropriate systems (i.e. management people and policies) were in place, a piece of machinery, mode of containment or whatever it may be is properly designed and maintained, operators and personnel were properly instructed, etc. It should be pointed out that it is sufficient proof of an offence to the corporation if it can be shown it was committed by an employee or agent of the accused whether or not the employee or agent is identified or has been prosecuted for the offence.

Statutory Civil Liability

Ontario Spills Bill

Turning to specific statutory civil liability, remedies which have been talked about a lot in the last year or so are those available as a result of a spill under Ontario's Environmental Protection Act, Part IX (the Spills Bill) I am told that Saskatchewan has a similar piece of legislation.

To come within the ambit of the statute, one must first have a "spill":

1) With one limited exception, a spill must be into the natural outdoor environment — note that it could be all on your own property and does not have to affect other people's property;

2) It must be out of a form of containment,

3) The subject matter of the spill must comprise what is known as a pollutant which is virtually almost anything (but does exclude heat, vibration, radiation) and would certainly include PCBs; and

4) It must be abnormal — slight spillage during handling may not be unusual, but slight leakage from a sealed transformer containing PCBs would be considered as abnormal.

Once it is established that a spill has occurred, then there are certain duties and liabilities that follow. The person in control of the pollutant immediately before the spill must promptly notify the Ministry of Environment (MOE), local municipality and owner (if he is not the controller) that a spill has occurred. This requirement can be pragmatically interpreted as prompt notification after stabilization has occurred and individuals are out of immediate danger.

Secondly, the owner and person in control are initially jointly and severally absolutely liable for cleanup and restoration of the environment. No due diligence defence exists, however, there is a qualifier in that their duty only extends to doing everything "practical" to prevent, eliminate and ameliorate the adverse effects of a spill and to restore the natural environment While this section hasn't been litigated yet, the general feeling is that because the Bill defines "practical", in relation to the technical, physical, and financial resources of those two parties, there will be a form of discrimination in the sense that he who is the more sophisticated, substantial party will be compelled to jump right in to take control of the spill site.

The other form of liability under the Spills Bill provides that owners and persons in control of a pollutant are statutorily obligated to jointly and severally compensate those who suffer injury or damage incurred as a direct result of the spill. Unlike the absolute liability provisions relating to cleanup and restoration of the environment, such entities are not liable if a type of due

MONS 225231

diligence can be shown or it can be shown that the spill was wholly caused by acts of war, civil war, insurrection, terrorism or by natural phenomenon of an exceptional, inevitable and irresistible character, or of a person intending to cause harm where such person is not engaged by the owner or person in control It is interesting to note though, that if one can show that the effects of the spill were such that the victim suffered economic loss only, recovery is possible (contrast to the traditional common law negligence action where economic loss is normally only recoverable where property damage or personal injury occurred as well).

A reading of the Bill suggests that as recovery is for direct loss recovery, this may expand horizons of recovery to areas beyond those damages attributable to negligence, i.e. that which is reasonably foreseeable.

I should add that although there is a statutory duty placed on the owner and person in control to be initially responsible, the Act certainly permits them to recover by the normal means from those who truly caused, or contributed to, the damage, injury or economic loss (i.e. normal law suits or perhaps relying on indemnification clauses in contracts).

Certain types of spills are exempted from Spills Bill liability on compensation but it is not envisaged that any PCB spill would fall within these categories (see Ont. Reg. 618/85).

Although I don't want to elaborate on this point, there are provisions in the Bill which permit people to be compensated by the Crown in limited circumstances i.e. such potential claimants do not include the owner of the pollutant, person in control of the pollutant, any person liable at law under this Bill and any person who will be compensated pursuant to a contractual right. The right arises where the Crown orders a person to take measures in the clean-up and restoration. Probably the most likely beneficiaries of this particular provision could very well be municipalities or regional municipalities within which the spill occurs and which take steps pursuant to an order from a Crown representative.

Another limited route for compensation is available if a spill has occurred and this is through the Environmental Compensation Corporation (ECC):

Spill Creditors

These creditors must notify ECC within 30 days. They must first attempt to recover from their insurers, if any, or those causing the damage. No settlement can be made without ECC approval ECC can compensate for bodily injury, cleanup, property damage, pecuniary loss, including lost wages. Payments made by others plus $500 will be deducted. Where claim is less than $10,000, court actions need not be exhausted before ECC will entertain claim.

Owners & Controllers

Qualify if they are without fault (i.e. responsible under Spills Bill, but not at common law.) Must have resolved all spill creditor claims. Must have taken legal action and attempted to enforce Judgment. Cannot claim for damage to their own property. Certain deductibles apply;

a) Farmer — $500,000
b) Municipality — $1,000,000
c) Corporation — $1,000,000 plus 10 per cent of value of corporate assets

Note: Overall maximum per incident — $5 Million.

Transportation of Dangerous Goods Act

The federal Transportation of Dangerous Goods Act while not creating any new statutory rights for individuals does nevertheless enable the government to recover reasonable emergency measure, costs and expenses to prevent an emergency from happening or cleanup and restoration costs which actually arise.

PCBs in the Workplace

OHSA — Ontario

Until December 1986, PCBs were not specifically regulated in the workplace in Ontario; however, at that time, regulation under OHSA identifying some 600 substances set out prescribed limits for worker exposure. PCBs now have a specific limit of 50 $\mu g/m^3$.

Previously, guideline levels based on U.S. TLVs were promoted by the Ontario Ministry of Labour however, I am informed those were slanted mainly towards the manufacture of products and equipment whereas today's use seems to be confined to the operation and maintenance of sealed transformers and capacitors.

Under the general OHSA laws there continues to be a general statutory requirement that an employer shall ensure that the worker shall not be required to work in an unsafe environment. Therefore, although a specific standard exists today, circumstances may become more onerous. In November 1986, for instance, the Ontario Ministry of Labour published an interim guideline dealing with appropriate measures to prevent and control occupational exposure to PCBs pending the completion of the regulation development process under Section

MONS 225232

22 of OHSA, i.e., the section under which substances are designated. This Guideline, which is dated July 1986, is quite comprehensive and recommended for those who have transformers and capacitors.

Workers Compensation

Currently, workplace liability exposure is essentially covered by Workers Compensation Legislation (although a recent Newfoundland case under appeal suggests it is only an alternative method of recovery). Certainly over the years the Workers Compensation Board in Ontario has received and reflected upon the occupational health considerations associated with PCB exposure. I am informed that up to last month, some 240 PCB-related claims have been filed since 1977 with the Ontario Workers Compensation Board, of which 210 are in the nature of surveillance claims. Some 30 claims have been cancer related. A handful have been dismissed and the balance of the 30 claims have been held in abeyance pending a report of an independent panel established by the Ministry of Labour looking into the health effects of certain substances, including PCB. The panel's report on PCBs is expected soon.

To my knowledge, no claims have ever been paid out by the Ontario Board for exposure to PCBs. My understanding is that the bulk of claimants are employees of those companies which filled transformers and capacitors.

Common Law Rights to Compensation

The Spills Bill remedies may come to effectively supplant many of the common law actions which are otherwise available to an individual who is injured or has property damaged as a result of contamination from a dangerous good such as PCB. However, common law remedies are certainly available and might be reverted to where one who is initially statutorily liable under the Spills Bill seeks to recover against the ultimate wrongdoer.

The traditional litany of common law causes of action which may be available are not unique to the consequences of PCB contamination but rather have been around for decades, sometimes centuries.

Five types of actions are:

1) Nuisance;
2) The principle of Rylands vs Fletcher;
3) Trespass;
4) Riparian rights; and
5) Negligence.

Nuisance

This in turn can be broken down into private and public nuisance. Private nuisance can loosely be defined as "undue interference with the use and enjoyment of property" Public nuisance has the same connotation except that it reaches a broader range of people The salient feature in this action is that the plaintiff, in other words the party who has suffered injury or damage, must enjoy either ownership or occupation of the property and interference with the use and enjoyment of such property.

While an isolated spill could be considered as a nuisance, the most frequent types ofnuisances are those which continue for long periods of time, i e smoke stack emissions.

Doctrine of Rylands vs Fletcher

This doctrine has been viewed as establishing the principle that a defendant is strictly liable for harm and damage afflicted to others as a result of the discharge or escape from the defendant's land of a dangerous item. Like nuisance, fault plays no role in determining liability. Generally speaking, this principle seems to be favoured by the Court more readily where a risk created by the defendant's conduct is quite exceptional.

As it may be difficult to prove negligence where there is a PCB spill, one could anticipate this being pleaded in the alternative. While this type of action usually relates to something escaping from a stationary source, the principle could also apply to an intransit occurrence. One can envisage the situation where stationary transformers leak excessively, allowing PCBs to enter the water system, e.g. perhaps private wells, streams, and damage can be shown to have occurred.

Trespass

This is a highly remote situation but could exist where a land owner who is also a PCB owner bring suits against an unauthorized intruder where such intruder creates havoc on property willfully causing a spill to occur which in turn causes damage.

Riparian Rights

The classic definition of the riparian rights doctrine states "every riparian proprietor is entitled to water of his stream in its natural flow, without sensible diminuation or increase and without sensible alteration in its character or quality Any invasion of his right causing actual damage or calculated to found a claim which may ripen into adverse right, entitles the party injured to the

MONS 225233

intervention of the Court"

This type of common law action may be available in a situation where an upstream PCB polluter can be exhibited as showing that the PCB content in the stream is such that it had adverse effects upon the riparian owner below, i e killing fish or plant life

Negligence

This is undoubtedly the most obvious form of common law remedy usually brought where property damage or personal injury occurs. A successful plaintiff must demonstrate a duty of care owed by the defendant, a breach of that duty of care, a link between the actions of the defendant to the damage suffered by the plaintiff and an actual loss or damage on the part of the plaintiff. One must be able to demonstrate that the link between the duty of care and damage is reasonably foreseeable and not too remote. Generally, the courts tend to give a fairly broad interpretation of what is considered to be reasonably foreseeable.

To prove negligence, one must demonstrate fault on the part of the defendant. Normally a negligence suit does not permit recovery for pure economic loss, i.e. financial loss which is not the consequence of physical injury or property damage. Again, note that under the Spills Bill, a plaintiff has a cause of action for economic loss.

Spills Bill or Common Law Route

It is beyond the scope of this paper to try to explain the intricacies and the differences between Part IX on Spills Bill action or Common Law action. However, one should be aware of the fact that to institute a statutory action under the Spills Bill, there is a limitation period of two years which must be met. Common Law actions are generally subject to a six-year limitation. In practical terms, I think this will mean an expedited form of litigation within the two-year period in the event of serious damage or injury resulting from a spill.

Again, I wish to emphasize the fact that pure economic loss is not generally recoverable under Common Law actions but recoverable in Spills Bill litigation.

Practical Steps to Minimize Legal Exposure

Insurance

If you haven't done so already, check to see what sort of insurance coverage may be available, and at what cost, for various scenarios which you may be exposed to as a result of a PCB spill involving your activity. PCBs are not likely to be highlighted within an insurance policy but may be and in event they would fit within the ambit of hazardous goods or dangerous goods provisions set out in the policies. Up to about five or six years ago, insurance used to be available with respect to what would be considered to be a sudden and unexpected release of a pollutant into the environment. Generally speaking, that has been excluded from insurance policies now Also, coverage regarding "slow leakers" was usually always exempt Now I believe coverage is hard to find.

The only good news is that at least in Ontario, I am informed it is a legal requirement that where a spill results in the course of transit, coverage under a vehicle policy will be triggered - normally coverage of this type does not exceed $1 million. You will normally find that your comprehensive general liability coverage is not available to you for indemnification purposes nor normally coverage under standard property insurance policies.

Consequently, the realities of life mean in most cases, you will be forced to "go bare" for PCB and other hazardous products in most instances.

Compliance Programs

The objective is to set up an effective program necessary to acquaint those most familiar with PCB operations of your company, to have a detailed working knowledge of the appropriate regulations in many cases. In setting up the program it might be necessary to have the input of your lawyer to assist you in overall direction in the project. Where dealing with a significant problem which appears to be ambiguous on the face of it, the prudent approach would be to consult with the regulator can and work out an acceptable scheme.

The details of the compliance program will vary depending on how extensively PCBs are dealt with in your organization. Elements to consider are the degree of worker handling of the substance, in some cases where low contaminated oil (i.e. less than 50 ppm) is used in a processing stage, perceived health considerations should be taken into account, keeping in mind that in Ontario, anyway, the level for PCB exposure to employees is within 50 $\mu g/m^3$.

Transportation procedures should be reviewed, again, in light of Reg. 11/82 under EPA and transportation of dangerous goods legislation. Where decontamination is involved is there a legal requirement, if not a requirement, is there a recognized guideline to follow? Also, your containment procedures should be looked at. Do you have the safeguards — both preven-

MONS 225234

tion and emergency clean-up plans necessary in the event of a spill from the facility? (If there is a leak out of the transformer itself into a mode of containment specifically devised for a spill, it probably is not considered to be a spill for purposes of the Spills Bill). Where storing and, in certain situations, disposing of PCB waste, are appropriate procedures in place which are consistent with the detailed regulations of the law? In those circumstances where a guideline is being prescribed by the regulator (i.e. those which do not necessarily have the force of law), it would be prudent not to vary significantly from such a guideline unless you can show that there is an equivalent or better way to address the problem.

Most companies like to state it is their intention to have standards at least equal to and in many instances higher than legal requirements. I venture to say with the recent proliferation of detailed regulations, virtually every company is struggling to meet existing provisions.

Corporate Audits

The concept of corporate audits in the environmental and occupational health and safety field is an increasingly popular mechanism in the U.S. and is an emerging idea in Canada. Essentially, an audit is a systematic, documented, periodic and objective review of facility operations and practices viewed solely from environmental or worker exposure perspective, as the case may be. An audit can be designed to accomplish any or all of the following:

1) Verify compliance with laws and corporate practices;

2) Evaluate the effectiveness of management systems already in place; and

3) Assess risks from regulated and unregulated materials and practices.

Effective auditing systems are likely to include the following general elements:

1) Explicit top management support (i.e. directive from C.E.O. endorsing audit);

2) Keeping audited function as independent as possible from the audited activities, e.g. external consultants are preferred but Head Office team auditing "the field" would be acceptable;

3) Adequate team staffing and auditor training;

4) Explicit audit programs, objectives, scope, resources and frequency;

5) Systematic process which collects, analyzes, interprets and documents information efficiently to achieve audit objectives; and

6) Mechanism set up for regular follow up of deficiencies noted and a provision for the audit cycle to run again in an appropriate time (it should not be considered to be a one shot deal).

There are essentially two types of audits - one which is more structurally oriented in terms of determining whether your organization is properly set up to deal with the subject matter, i.e. the whole PCB issue, and the other type of more common field audit which is site or substance specific.

You should be aware that, given the broad search and seizure powers which seem to be generally available to regulators in the public welfare statute area, in most cases it would appear that such an audit would probably be seizable by the authorities. Lobbyists across the country have urged the politicians to prohibit seizure of audits through statutory protection. At the very least, they have been urging regulators to develop policies against seizing such audits in a routine manner (this is the approach in the U.S.). There is some discussion to the effect that an audit, if properly structured, may be protected under solicitor-client privilege if quarterbacked by a lawyer. I do not agree with this approach because:

1) Except under unusual circumstances, I strongly doubt whether the privilege extends this far (it is confined to litigious circumstances);

2) The whole purpose of such an audit is to use it as a management tool — this requires openness, rather than secrecy and full participation and co-operation of "field personnel" — this includes broad circulation of the report and its findings to a large number of managers.

Spill Procedure

Specific concern should be addressed to identifying those segments of your operations involving PCBs most vulnerable to a PCB spill. Remember that such an occurrence need not happen merely in the course of transit but could happen from a stationary facility as well. Measures to take into account are:

1) Which scenarios are most likely to occur;

2) Specific training of personnel and/or engagement of outside consultants to assist;

3) When moving PCBs, is an emergency response plan necessary (in any event, procedures should be developed);

4) Awareness of telephone numbers to regulators and municipality, if required;

MONS 225235

5) Knowledgeable spokesman available to deal with media; and

6) Periodic practices of cleanup procedures.

Prompt and effective steps taken in clean up can go a long way to head off a pollution offence — there are no assurances that a charge won't be laid but this factor is taken into consideration when the regulator is exercising his discretion as to whether or not to charge

Passing of Title

Even though various pieces of legislation still may require a shipper and consignee to discharge those obligations imposed on them under the legislation nevertheless, in view of the Spills Bill, there is an increased focus and awareness of the impact of ownership of pollutants at the time of any spill. Again, in so far as the Spills Bill of Ontario is concerned, ownership means that initially, one is liable (and if a person other than the owner is in control at the time of the spill, that person is jointly and severally liable with the owner).

The general law states that title passes between supplier and customer at the time parties intended it to pass — in the vast majority of this focal point is the F.O. B. point. In the long run this will probably boil down to supply and demand considerations and the dynamics of the marketplace. However, contract review should not stop within an analysis of the FOB point. It is also necessary to read the whole contract to ensure that a standard term or condition of the party who in fact is taking title to the goods during the course of transport does not have the remedy available of a blanket indemnification from the other party. Again, under the Spills Bill, should the latter situation arise, the party having title to the goods would be statutorily responsible. However, ultimate recourse would clearly be available by virtue of an indemnification clause.

Quite apart from where title may pass and if title should pass, one must look very carefully at the organization with which one is contracting as the courts will look unfavourably at a situation where a substantial corporation has essentially sought and obtained appropriate contract relief when dealing with a "fly-by-nighter" who does not have the wherewithal. Responsible corporations also have corporate consciences, i.e., they don't want to be perceived to have been excluded from liability by reason of "sharp" practices.

Supplier Warranties

When an organization is incurring significant expenditures for either pollutant abatement equipment or workplace control equipment, one is strongly advised to carefully look at the purchase contract with the view to attempt to secure a form of warranty which is tracked in some fashion to the requirements of the legislation In other words, most suppliers will only volunteer standard type of warranty, i.e., specific hardware warranty for a certain period (and then only perhaps modified by whatever warrantees are provided by their parts supplier). In a competitive situation, I do believe it would be appropriate to obtain a more streamlined warranty for the equipment which you are purchasing. After all, in many cases but for the increasingly stringent provisions of the law, the equipment may not have been necessary in the first place. In stating the foregoing, I recognize it is difficult to perhaps insist on full compliance with respect to any warranty. On the other hand, though, if one does not receive a warranty of this nature, then no other method exists for sharing that particular exposure with your supplier.

Dealing with Regulatory Enforcement Branches

While each specific piece of legislation must be examined to determine the nature of the search and seizure power available to regulatory enforcement agencies (which powers have to be continually reconsidered in light of jurisprudence which arises these days primarily out of the Charter cases); nevertheless, there seems to be a trend occurring which indicates that inspectors under public welfare statutes seem to have broader search and seizure powers (than criminal offences) and in some cases, there is a requirement for those who are the subject of an investigation to actively cooperate with such investigators.

Where enforcement has become more aggressive, it is prudent for the organization to consult specifically with its own legal counsel as to the steps that might be appropriate should the organization be subjected to an investigation. These measures could include:

1) Ensuring that the investigator has the proper authority to do whatever he says he has to do;

2) Determining early in the game the nature of the records to be seized or reviewed;

3) Determining how the interview should be conducted with the investigator (with the preference being that one staff member and/or a lawyer be present at all times, at least important interviews);

4) Instructing employees being interviewed only to respond to the question being asked and not to volunteer information or offer opinions;

5) Refusing to sign statements or records of meetings

MONS 225236

which may be taken;

6) Allowing interviews to be conducted on business premises during normal business hours unless other plans are specifically arranged; and

7) Establishing mechanism for consulting at the very least, with legal counsel before an investigation is underway

Corporate Restructuring

Depending on the nature of one's business one may wish to consider breaking down the current corporate organization into a number of separate corporations with the view of minimizing liability. Those whose main business is dealing with hazardous waste products should in conjunction with their legal counsel, seriously consider this scenario. Having said this, I am mindful of the fact that in the event of a spill in the transportation of a hazardous product such as PCB, those who seek to "get at" the assets beyond the transportation company would attempt to bring an argument to "pierce the corporate veil" of the transportation company. If the only reason for restructuring an organization was to minimize this type of exposure, one can expect the court to be skeptical; however, if this type of exposure can be painted as being one of many other business reasons why the corporations have been set up in that particular fashion, a defendant has a much better chance of success.

Employee Indemnification Programs

Given the fact that many jurisdictions are increasing the penalties for pollution and workplace infractions including in some instances creating express statutory duties upon officers not discharging their duties and laying charges against individuals in lieu of or in addition to laying charges against their employers, it seems prudent to develop (or revise, as the case may be) a written policy effectively illustrating to your employees that you intend to stand behind them where they are personally charged in carrying out their responsibilities.

Elements of such an employee indemnification policy could include:

1) Its application to existing and former employees who are charged;

2) A liberal interpretation of what constitutes an employee's duties and responsibilities;

3) Assumption that an employee is considered innocent;

4) A distinction perhaps between criminal and non-criminal offences (i.e. maybe the policy will apply initially in both cases, but will cease to apply where an employee is convicted of a criminal charge); and

5) Covers all reasonable costs associated with the subject matter, such as independent legal counsel, reasonable time off to prepare for the case and reimbursement for any fines or civil damages which may be levied.

MONS 225237

A Comprehensive Approach to Managing PCB Contaminated Electrical Equipment

R.K. Wallace
Manager, Environmental Projects
Westinghouse Canada Inc.
Services Division

One of the few remaining approved uses for PCBs is in electrical equipment such as transformers made prior to 1978 and which remain in active service.

PCBs were once used in both open and closed systems. Open systems, now banned, included paints, inks and adhesives, where PCBs were part of the blend and where the product could easily end up in the environment. Transformers, capacitors, etc. containing PCBs are described as closed systems. Based on existing legislation, they can continue to be used throughout their service life, unless a phase-out strategy, currently under consideration by the Canadian Council of Resource and Environmental Ministers, results in specific timetables.

The term "closed system" tends to imply that there is little risk of environmental or worker exposure to PCBs from such equipment. This should not be assumed. Much of this equipment is well down the road in its useful life cycle. Some of it has not been properly maintained. Rusting and pitting of tanks and rads is not uncommon. Extreme fluctuation in equipment temperatures due to low askarel levels or overloading may have fatigued welds, aged gaskets and stressed bushings. Sudden leaks may occur frequently and require pumping the askarel or contaminated oil from the transformer to permit repair. A piece of equipment which, in the "as built" condition, could have been reasonably described as "closed", may now be an avenue for contamination of your buildings, your employees, the general public and the environment, through leaks, spills and fires.

Maintaining electrical equipment in top notch condition to avoid unscheduled outages and production loss is important to most firms. Maintaining askarel or PCB-contaminated equipment is even more critical and in our view, warrants the development of a PCB management program which is tailored to the specific situation at the plants, offices or buildings concerned.

Recent incidents involving PCB leaks, spills and fires have resulted in adverse publicity and significant clean-up costs, along with criminal charges, civil law suits to recover damages claimed for loss of production because offices and plants had to be closed, and for alleged health consequences have also been launched.

While spill clean-up can be expensive, perhaps of greater concern is the risk of contamination and close down for clean-up from fires which involve PCB-equipment. The pyrolysis of PCB can produce an oily soot containing highly toxic dioxins and difurans which can be deposited on walls, floors, equipment and papers.

Fires don't have to be electrical in nature to cause problems. For example, a trash fire in a New York State public building in Binghampton, N.Y. in 1981 caused a transformer bushing to crack. About 180 gallons of the 1,060 gallons of askarel leaked into the fire. Fire damage itself was limited to the equipment room, but the soot containing PCBs, dioxins and difurans was drawn into the air conditioning system and throughout the building. Five years and $35 million in clean-up costs later, the building was again ready for occupancy. The original cost of the building was $17 million.

A 1983 fire at an underground vault at One Market Plaza in San Francisco involved about 50 gallons from an askarel transformer. The soot entered the ventilation system of an adjacent building and contaminated the first six floors. Clean-up took 42 weeks and costs

MONS 225238

exceeded $20 million.

In addition to the staggering clean-up expense, the Binghampton fire has reportedly resulted in liability suits approaching $2 billion, while the owners of the San Francisco are facing $1 billion in suits. (1)

There have been a number of Canadian PCB fires. The Hydro-Quebec speaker has given us a graphic picture of the cost and problems caused by their 1984 capacitor fire.

Environment Canada does not require registration of PCB equipment below 50 ppm but even at such levels there is cause for concern. The U.S. Environmental Protection Agency found that dioxins and furans have been released in fires involving mineral oil contaminated to only 5 ppm.

Even simple overheating of electrical equipment which contains PCBs can generate impressive quantities of dioxins and furans.

Earlier we talked about the need for each owner to have a PCB Management Program to reduce risks, but where do you start?

Risk Reduction Plan

For most firms, the key objective of the survey is to have their staff, or their supplier of electrical equipment service, identify specific actions that will eliminate or at least significantly reduce the spill and fire potential at their site and enhance equipment reliability.

We have found that a formalized, quantitative Risk Analysis Survey which is weighted to risk element significance, helps us to provide a viable prioritized action plan for our clients. The special risk survey approach developed by us, is based on years of real experience in maintaining all types and makes of PCB electrical equipment.

The survey includes such aspects as electrical system protection evaluation, location factors, safety enhancement and legal conformance.

The electrical service firm should also report on remedial actions on curbing, drains, ducts, vents, and if appropriate, the need for oil, smoke and fire-actuated switches that would close vents and shut down drain sump pumps to prevent the escape of contaminants from spills or fires.

The survey should examine the fire protection system to ensure it will perform and yet offer minimum exposure to plant or emergency personnel in the event of a fire.

In most cases, the remedies to reduce risk are relatively easy and inexpensive. Perhaps it is to simply relocate askarel equipment to another area where heat processes are not located.

Equipment Maintenance and Repair

The completed risk analysis helps focus on preventative maintenance and repair actions which ensure electrical integrity and will reduce or eliminate the probability of leaks or spills.

This is important, since the strict regulatory controls governing in-service equipment is backed by legislation which can result in fines or jail terms, particularly if you cannot document that all necessary precautions were taken to maintain the equipment to minimize the chances of leaks or spills. Written records will provide the audit trail necessary to prove your prudent management of the risks.

Some of these things include. insulation resistance, turns ratio, power factor, protective devices and coolant systems.

If there have been changes to the layout or any of the components of your equipment, you should consider having the electrical system protection analyzed since it is possible that the protection for transformers and capacitors is no longer effective and this could lead to fires and ruptures.

Infrared analysis of equipment to detect hot spots before they become trouble spots is another diagnostic tool which can be a lifesaver.

Disconnect, Store and Replace Equipment

If the assessment indicates there is a high risk in leaving PCB equipment in place, or if you decide to replace it for other reasons, such as part of an electrical system modernization program, you should make certain that the electrical service contractor includes specific steps to protect your plant property and the environment from leaks or spills while the work is underway.

Some elements to incorporate in the plan include drain sealing; protection of hallways, elevators, secondary containment; temporary storage of contaminants and rigging practices. Consideration should be given to the Environment Canada and Provincial Environment requirements for storage containers and buildings

Literally millions of dollars can be lost as a consequence of a single PCB incident on your property For this reason, it is essential to use well qualified and insured electrical sub-contractors and riggers with both the technical skills and the financial strength to deal with such incidents over the long haul Insurance cov-

MONS 225239

erage for sudden or accidental pollution is currently very hard to obtain. You should ask each contractor to provide you with a certificate showing the extent of their coverage. Generally speaking, if the certificate does not specifically state Sudden and Accidental Pollution Coverage, along with the dollar value, then such does not exist

Health Concerns and Spill Control

Occupational Health and Safety is an important issue to be considered in dealing with employees and the general public who might come in contact with your PCB equipment or be exposed to liquids or by-products of PCB combustion.

PCBs have become identified in the public mind as hazardous. They are stable, accumulate in the environment, persist in the food chain and can be absorbed into the body through skin contact, ingestion associated with eating, drinking, smoking and inhalation.

We therefore, have established protective clothing and equipment standards and utilize various sealing, diking and material handling practices to avoid leaks, spills or exposure of employees and the general public.

Our employees who work on PCB equipment have attended a three-day training program where all of these elements are taught, with particular emphasis being placed on spill prevention, spill containment, spill clean-up and personal hygiene.

Decontaminate in Place, Retrofill and Reclassify

This alternative is potentially attractive if it can be conducted safely and at a cost below replacing it with new equipment. The preservation of the transformer's useful life and eliminating the need to relocate existing units in difficult to access situations are attractive features of the option. You have already heard today of the sodium systems that are available for dealing with low level PCB contamination of mineral oil. I would now like to now explain the Westinghouse Transform (TM) process of declassifying pure askarel transformers to non-PCB status. We hope to introduce this service to Canada this year following the necessary government approval.

TransForm™

Industry has sought an acceptable procedure by which pure askarel transformers could be reconditioned in some manner, to permanently reduce the PCB concentration below 50 ppm while the transformer remains in service Several attempts have been made to achieve this goal. Certain methods attempted to filter PCBs from the transformer; others tried to reduce PCB concentration by multiple retrofill actions. Varying degrees of success (or lack of success) have been achieved. Residual PCB leaching from the core and coils, untenable power interruptions and lengthy processes have been frequent barriers to complete success

In early 1986, following a joint development program with Quadrex HPS Inc. (2), Westinghouse in the U.S. introduced TransForm™, a PCB reconditioning process which guarantees reclassification of askarel-filled equipment to non-PCB status (below 50 ppm) quickly and with only two short power interruptions. This process is not intended for mineral oil-filled transformers that are PCB contaminated.

Process

After a complete inspection and fluid sampling, the transformer is de-energized for a period of less than 48 hours to allow draining of the askarel fluid, changing the gasket material, and retrofilling with a proprietary fluid, TDR-3. A processing unit is then connected to the transformer and the transformer is re-energized.

The TDR-3 dielectric fluid is an excellent medium for extracting PCBs from the transformer internal components. The unit processes a continuous flow from the transformer, removing the PCBs from the fluid and returning cleaned TDR-3 to the transformer. The TransForm™ unit is interlocked in such a manner that the liquid level in the transformer is maintained at the proper level. All parameters of the TransForm™ unit which can affect the operation of the transformer are monitored and interlocked to assure that the transformer remains within the normal operating range. TransForm™ is designed to run automatically during the servicing period, approximately four to five months or less. Servicing and inspection visits are made at two to three week intervals. The extracted wastes are removed from the site.

At the conclusion of the treatment period, the TransForm™ unit is disconnected from the transformer for a 90 day in-service period to confirm the unit remains below the 50 ppm (non-PCB status) in accordance with regulations. After reclassification, the transformer is taken out of service for approximately 8 to 24 hours service. During this outage, the TransForm™ unit is disconnected from the transformer and the TDR-3 fluid is drained. TDR-3 is not intended to be a permanent replacement dielectric fluid. The transformer is retrofilled with a dielectric fluid of the customers

MONS 225240

choice. Candidates include mineral oil, silicon fluid. Using TransForm™, transformer owners can achieve guaranteed non-PCB status without having to replace existing equipment. TransForm™ is particularly suited for units that are expensive, costly to remove or have a long remaining service life.

Customers in the U S., ranging from major utilities that committed their entire system to small industrials with two or three transformers have had their transformers processed. Reclassification levels of zero to 17 ppm following the 90 day period are not uncommon as shown in Table 1.

Many more transformers for industrial, commercial and utility customers have completed their processing and are currently in their 90 day waiting periods. Many, many more are currently in process in major commercial buildings, hospitals, universities, dairies, chemical plants, paper mills, steel mills, utility power plants and distribution systems.

We expect the TransForm™ process will be available in Canada this year, following the necessary regulatory approvals. By utilizing TransForm™, the askarel transformer owner will be able to retain selected units within his system as non-PCB transformers with minimum disruption to his power supply and production schedule. The immediate economic saving is an obvious benefit. The resulting non-PCB classified transformer can be disposed of as non-PCB devices at the end of their useful lives. It is not uncommon for TransForm reconditioning of an average 2500 KVA transformerswhere "in and out" costs will be significant, to render savings of 40 per cent over turnkey replacement. Obviously, site conditions greatly affect the difficulty to remove and replace transformers and each must be evaluated on its own merits. Askarel transformers that are small, easily accessible and inexpensive to purchase are usually better candidates for turnkey replacement. Similarly, askarel units that are "old" or in poor physical or electrical condition should be replaced

General Conclusions

There are many choices to be made in managing PCB equipment. This paper does intend to promote or recommend indiscriminate reconditioning, or retrofilling of oil-contaminated or askarel transformers. Nor does it intend to recommend indiscriminate change out or replacement.

It is the intent of this paper to recommend that the owner's entire PCB system be carefully evaluated from the stand point of risk; that identified deficiencies be immediately remedied; and that a carefully evaluated long term PCB management program be implemented to retrofill, recondition or replace each PCB device as it is most appropriate from a service and economic standpoint.

The PCB program may also give added opportunity for replacement of askarel transformers, capacitors, etc that no longer accommodate the client's current power requirements before specifying a replacement program.

For any of these risk reduction procedures, a reputable total service supplier is recommended to assure an unbiased evaluation of each option and thereby achieve maximum risk reduction per dollar spent, with less disruption to your business operation.

References

1. Alderman, F.R. "PCBs In Electrical Equipment — A Growing Concern". *Professional Safety Magazine May, 1987*

2. McMahon, Murray D. and Venable, Thomas C. "TransForm — In Service Reclassification of Askarel (PCB) Transformers". *Presented to the 39th Annual Technical Conference of the IEEE Industry Applications Society—Rubber and Plastics Industries. Akron, Ohio, April 7, 1987.*

Table 1

XFMR	Manuf.	KVA	Prim. Volt	Sec. Volt	Fluid Gal.	Reclass Time	PPM Reclass
A	(W)	1500	12 KV	480Y/277	410	120 Days	7 3
B	GE	2500	12 KV	480Y/277	400	100 Days	8 5
C	(W)	2500	13 2 KV	480	1060	6 Months	17 0
D	(W)	1750	13.2 KV	480	250	6 Months	0
E	(W)	1500	13.2 KV	480	221	6 Months	6
F	(W)	1500	13 2 KV	480	221	6 Months	5
G	ITE	1500	69 KV	480/227	300	6 Months	6

MONS 225241

Chemical Decontamination

David Bray
Maintenance Engineer
Transmission Stations
Ontario Hydro

Before providing an outline of the process and experience to date of our mobile decontamination unit, MPU-1, a few points in relationship to our low level PCB decontamination program should be identified.

Firstly, contamination: prior to 1979, there had been little concern with PCBs and their potential environmental effects. The oil became contaminated during manufacturing or maintenance activities, when common pumping equipment would have been used for askarel or oil, without flushing and decontaminating between changes. This activity allowed cross contamination of the insulating oil with residual amounts of askarel that had remained in the piping and pumping systems, and therefore contaminated the oil and equipment that actually did not require the PCBs in the first place.

Secondly, an explanation of what is meant by "LOW LEVEL". In order for us to differentiate between concentrated PCBs or askarel and contaminated oil, we define "LOW LEVEL" PCB contamination as any electrical insulating oil with less than 7,000 ppm PCB. It is anticipated that the Ontario Ministry of the Environment will be placing an arbitrary limit of 5,000 ppm as the maximum figure for defining the low level contamination, but the order of magnitude is the same. At present, the Ontario Hydro systems have no contaminated oil over this 5,000 ppm limit. In fact, the average PCB concentration in all oil known to be contaminated is about 200 ppm, and totals some 6,000,000 litres of oil in operating equipment or in storage, throughout the province.

Thirdly, we have estimated that it will cost Ontario Hydro about $16 million to identify, analyze, drain, decontaminate and refill the equipment with the 6 million litres of oil. At an average of 200 ppm PCB this amounts to a total of some 1200 L of pure PCB (or 6 — 205 litre drums) and a cost in excess of $13,000 per litre.

We have designed and built our decontamination unit to remove and chemically destroy this 1200 L of PCB over the next 10 years or so.

The Ontario Hydro inventory of contaminated oil is primarily contained in operating equipment spread throughout the Province, and this is presenting us with some different aspects to the planned operation of our unit when compared to those of the single site owner or small utility.

The Ontario Hydro inventory of contaminated oil is contained at some 300 sites of large power transformers totalling 2,750,000 L. Thirty sites with large oil circuit breakers totalling 500,000 L, and about 25,000 pole top locations throughout the province totalling 1,000,000 L; thousands of bushings, current, potential transformers totalling 1,000,000 L and approximately 10 storage sites with 750,000 L.

Many of these sites are not suitable for the operation of the decontamination unit either because of size, location or proximity to open water. We expect, therefore, to consolidate much of this oil at various operating sites throughout the province. Also, it is not economical, convenient or sometimes possible to remove the oil from equipment in any particular area to suit a preplanned schedule for our unit. This is primarily because it is not always possible to arrange for the outage on the equipment to do this work. For this reason, our approach will be to remove the contaminated oil at such times as the operating schedules of electrical system

MONS 225242

will allow. The equipment would be refilled with clean oil and returned to service. The contaminated oil would be stored for decontamination on site or at approved consolidation sites. We are using two types of storage, housed in converted shipping containers (1,000 gal) and bulk storage tanks (4,000 gal), each with full containment. The process unit would then be scheduled to the sites when an adequate volume of oil is available, in the order of 50,000 to 100,000 litres. This plan is predicated on the local approvals as dictated by the Ontario Regulations.

There are currently three, low level decontamination technologies approved for use in Ontario They are the Ontario Hydro, Sunohio and PPM Systems. All three systems are, to some extent, similar in that they all use a sodium dispersion, as the principal agent in the destruction of the PCB contamination. Ontario Hydro pursued the development of its own destruction facility to ensure that it could control the quality of oil in its high voltage equipment.

Chemical Principles Of The Process

A description of the Ontario Hydro unit and its basic principles of operation follows. As has been already stated, the process is based on the chemical removal of the chlorine atoms from the PCB molecule by a sodium dispersion, to produce NaCl (salt) and a neutral biphenyl. Side reactions include the reaction of Sodium and water and/or with acidic organic oxide products in the insulating oil. These side reactions render undesirable acidic oil products insoluble and therefore removable by centrifuging or filtering. The reaction of sodium and PCB releases some heat, and a maximum limit of PCB concentration in oil of 7,000 ppm has been set for our process which limits the temperature rise to less than 40°C.

Basic Stages Of The Process — 5 Stages

1. Drying of contaminated oil by vacuum degassing to remove as much water as possible.

2. Heating of the dry oil to about 100°C in preparation

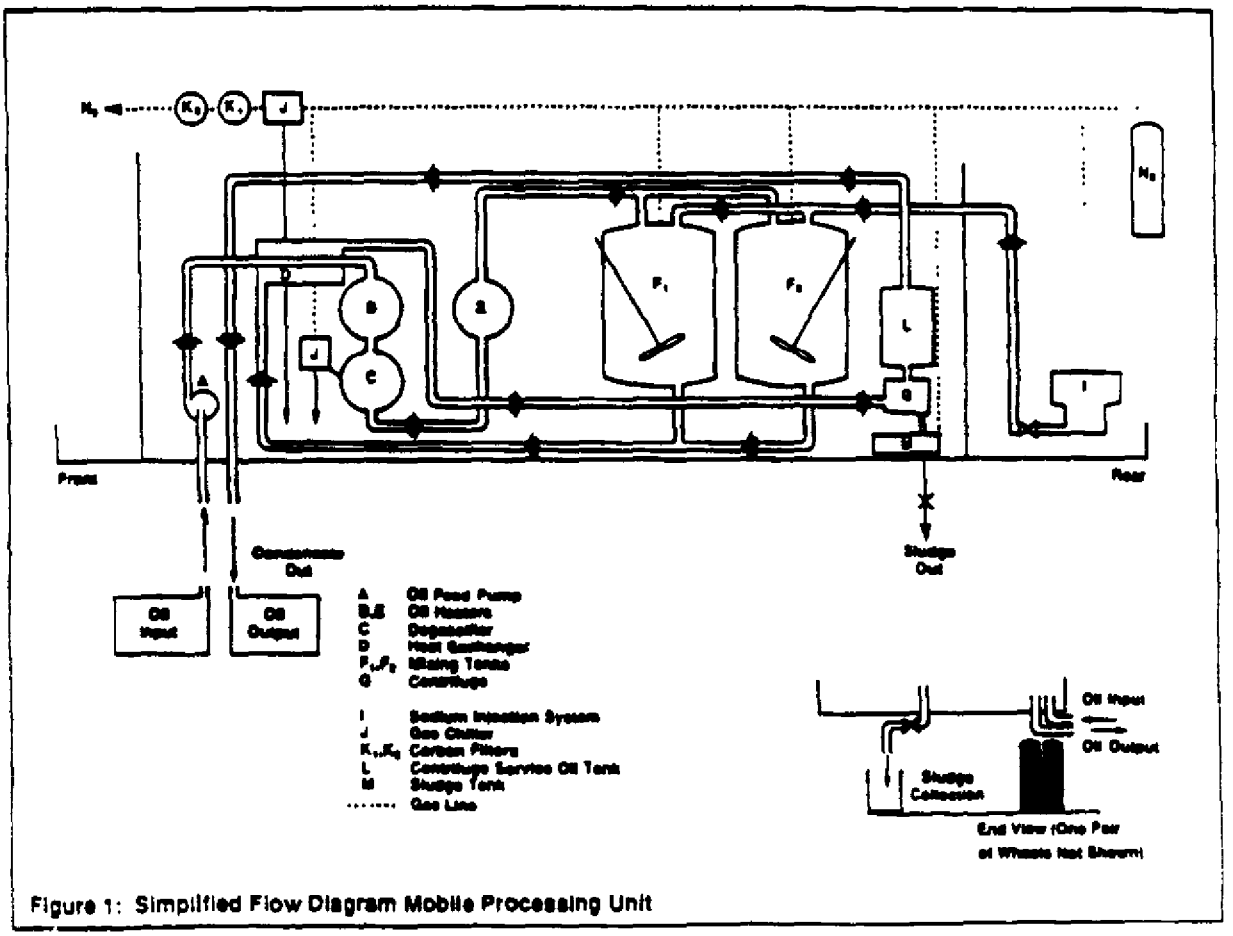

Figure 1: Simplified Flow Diagram Mobile Processing Unit

MONS 225243

for reaction with sodium.

3. Injection of sodium dispersed in transformer oil, the amount determined by the PCB concentration in the oil.

4. Removal of the reaction solids by centrifuging.

5. Upgrading of the oil to return it to an acceptable reuseable quality. This stage is performed by equipment other than the PCB unit.

The Process

A more detailed outline of the Ontario Hydro process as it is performed on our unit is shown in Figure 1 and is described below:

Contaminated oil is fed to the processing unit by a feed pump, "A", through heat exchanger "D". This heat exchanger transfers heat from hot, decontaminated, output oil to cooler, PCB-contaminated input oil. The oil then flows through heater "B", which raises the oil temperature to about 70°C so that subsequent treatment in the degassifier, "C", will efficiently remove most of the trace water from the oil. If present, trace water reacts with the active PCB dechlorination reagent, sodium, and degrades system performance.

From the degassifier, the oil flows through heater "E", which heats the oil to a required process temperature of approximately 100°C. The heated input oil then flows to one of two mixer tanks to await decontamination. Two mixer tanks, "F" and "F", are used so that oil input and output processes might be carried out at the same time. The operator samples and tests the incoming oil for PCB concentration, while the mixer tank is filling.

In the decontamination phase, a small amount of sodium dispersion, the volume extrapolated using the PCB concentration, is injected from the reagent system, "I", into the mixer tank, where it is agitated with the oil for approximately 10 minutes. At the end of the mixing period, the PCB content of the oil is reduced to less than two mg/kg and the oil can be pumped through the centrifuge "G" to remove reaction solids and then to an external storage tank, to await upgrading for reuse. PCB concentrations are confirmed by an on-board Gas Chromatograph. The centrifuge residue is collected in sludge tank "M", after being automatically flushed from the centrifuge using oil from Service Oil Tank "L".

As the batch of decontaminated oil is pumped out, the next batch of contaminated oil is pumped into the other mixer tank, and the process repeated. The batch concept allows us to ensure PCB destruction on board and before discharging to the external storage tank. Nitrogen gas and vapours from the degassifier and mixer tanks pass through chiller condensers, "J", and dual activated carbon filters, "K", and "K", arranged in series and designed to remove any trace PCB.

Performance Data

Power requirements, a maximum of 160 kW from either 600 V or 208 V. Control of the process is handled essentially automatically by an Allen Bradley Programmable Controller. Max PCB: 7 000 ppm reduced to two ppm in a batch process. Flow rate: 1,500 L/batch, approx. 1.5 hours/batch but increases once PCB levels are above 1,000 ppm.

Typical Sodium consumption: About 9 litres of dispersion for 200 ppm 1,500 L batch.

One to three per cent of each batch is removed as sludge, which is primarily NaCl, NaOH and neutral biphenyls. The sludge is caustic and may have to be neutralized before disposal. Nitrogen consumption, about one cylinder every 20 batches. Normal staffing complement is two people.

Safety Features

Apart from the vapour control system already mentioned, the trailer is provided with:

A containment floor with a 12" high sill is designed to contain a greater volume than all the liquids contained on the unit at any time, should there by a major equipment failure.

A sophisticated fire extinguishing system employing a cross-zoned halon system in the control room and oil processing sections, and an argon system for the rear sodium dispersion section. Thermal and ionization detectors are placed throughout the trailer. An alarm will sound if smoke or fire is detected and all equipment will shut down immediately.

Operating Experience

In early 1985, Ontario Hydro signed an agreement with RONDAR Inc., a Hamilton based electrical service company, for them to operate the unit anywhere in Canada for the decontamination of electrical insulating oils other than Ontario Hydro's.

In early September 1986, RONDAR used the unit in its first commercial operation, to decontaminate a total of some 37,000 litres of oil from three transformers at different sites near Halifax, for Nova Scotia Power Corporation.

The oil in each transformer contained PCBs at ap-

MONS 225244

proximately 200 ppm. The oil was returned to the transformers at less than two ppm. As of May 1987, the leach back figures indicate a PCB level of less than 10 ppm. The unit was used again, this time in Montreal, by RONDAR, in late October 1986, to decontaminate a mobile tanker containing 60,000 litres of transformer oil at 250 ppm for Hydro-Québec. The complete volume of oil was decontaminated to less than two ppm.

The oil returned to the customer in each operation was of equal or better quality than supplied to the unit, and with the PCBs removed.

Operational Requirements In Ontario — Decontamination (Class 2 Types)

This type of chemical decontamination process is regulated in Ontario by the Ministry of the Environment, under Regulation 148/86, as a Class 2 facility. Class 1 facilities are incineration types, designed for the destruction of concentrated PCBs or askarels. Class 3 sites are similar to Class 2 sites, except that a direct hook-up to a piece of electrical equipment is made. The Ontario Hydro unit can be used as either Class 2 or 3 sites.

In order for us to obtain technical approval for the process, we were required to demonstrate its capability to the MOE. These tests were completed in February 1986. Such tests, apart from proving the successful destruction of PCBs, also involved the monitoring and analysis of sludge and vapour discharges. The MOE will also consider other jurisdictional approvals, which would then remove the need for further tests in Ontario.

Site operations are also regulated in Ontario. Approval to operate at any particular site must be obtained from the Regional MOE office within whose territory the site is located. At the same time that the application is made, the clerk, fire chief and medical officer of health of the local municipality must be advised, providing at least 30 days notice.

Once approval to operate has been granted, there are certain requirements to be met under the regulations namely:

— A maximum 90-day site limit, a return to the same site not being permitted until 12 months has elapsed from the last departure date.

— Within the 90-day limit, a maximum aggregate of 1,800 hrs operation with a subsequent operational limit of 1,440 hrs total, for all facilities operation in that municipality, within the 12 month period.

— 100 metres from water courses. Drains and ditches must be blocked off.

— 20 metres from residences, schools, hospitals, etc.

— The operators must be adequately trained to operate the facilities and be familiar with the regulations and emergency response plans.

— Reports of each operation are required to be filed with the MOE within 60 days of operation completion.

When Ontario Hydro receives approval for the technology to operate in Ontario, we will start our program to decontaminate our insulating oil, a program which is expected to take some 10 years to complete.

MONS 225245

High Temperature Destruction of PCB Wastes

Dr. T.G. Barton, Dr. S. Fergusson,
Pyrolysis Systems Inc.
and
Dr. M.F. Joseph
Westinghouse Plasma Systems Canada

Pollution stems from overtaxing the natural purification processes offered by the environment. Presently, the large volumes and many types of hazardous industrial wastes currently produced pose a serious threat to both the public and the environment. It is estimated that over 300 million metric tons of hazardous and/or toxic wastes are generated on an annual basis (1,2). This waste must be treated appropriately if man is to prevent irreparable damage to this biosphere.

In 1976, the United States Environmental Protection Agency (EPA) responded to this threat with the enactment of the Resource Conservation and Recovery Act (RCRA) and the Toxic Substance Control Act (TSCA). As a result of these two acts, a large increase in research activity was commenced to seek methods to destroy organic liquid and solid wastes. This was again accelerated in 1984 by the passing of the Hazardous and Solid Wastes Amendments (HSWA) to RCRA which requires a series of landfill ban restrictions on eventually all hazardous wastes by 1990. Obviously, the implementation of these amendments are dependent upon the availability of successfully demonstrated alternative technologies to replace the existing land disposal practice.

Prior to new technology being demonstrated, it must be able to comply with all the necessary criteria established by RCRA and TSCA. These regulations generally apply to the efficiency of destruction for the waste stream in question and certain restrictions as to the quality of the emissions that must be achieved and maintained. Efficiencies are measured as a destruction and removal efficiency (DRE) and expressed in a per cent as calculated by the following formula:

$$DRE = \frac{\text{Waste In} - \text{Waste Out}}{\text{Waste In}} \times 100$$

The waste is measured by the mass feed rate of the Principal Organic Hazardous Constituent (POHC). Under RCRA, hazardous waste facilities must maintain at least a 99.99 per cent removal efficiency while technologies processing PCBs which are considered toxic and regulated under TSCA must operate at DREs in excess of 99.9999 per cent . In addition, particulate and HCL emission restrictions also apply. Associated emissions of products of incomplete combustion are also regulated and standards set. Products of incomplete combustion are generally compounds which are not present in the actual feed stream but may be produced as a by-product of the destruction itself. Of greatest concern are the highly toxic chlorinated dioxins and furans.

Although incineration has been recognized as one of the best demonstrated available technologies (BDAT), there has been a rapid increase in the number of innovative chemical and thermal processes for the ultimate destruction or reduction of hazardous wastes. During the past decade there have been significant advances in the high temperature treatment of toxic and hazardous materials. Much of this technology is presently emerging from the laboratory of pilot scale and making advances in the commercial sector for the treatment of toxic and hazardous waste. In this paper, I will briefly outline some of these new technologies and discuss their present status and performance.

MONS 225246

Molten Glass Process

The molten glass process offers an application of an old technology to a new problem. Glass furnaces are abundant in North America and offer high temperature and high residence time in their basic design.

A molten glass furnace can accept virtually any solid or liquid for destruction. Solids which are fed to these furnaces should be organic in nature and have a low ash content. The advantages of molten glass lie in the large volume reduction which can be obtained through the destruction of organic solid and liquid waste. Residual inorganic fractions are usually bound into the stable glass matrix which forms a non-leachable residue. The molten glass process is not appropriate for soils or very high ash content wastes. If the sodium sulphates are present in excess of one per cent of the final glass matrix it could present a glass handling problem and also induce larger leachable fractions from the glass matrix.

Molten glass is based on existing glass-making technology, and commercial units are presently available. These units are generally sold as chemical processing units, not as incinerators. At present, tests are in progress to evaluate the performance of molten glass systems for the destruction of chlorinated solvents. The status of these tests is at yet unpublished. Additional treatment for the off gas from the glass-making furnace is also required. This treatment may involve post-combustion and scrubbing.

Infrared Systems

Infrared systems generally rely on a radiant surface to transfer energy in the infrared spectrum to the waste being treated. Two systems presently available are the Shirco System and the Advanced Electric Reactor System.

The Shirco System is suitable for solids, sludges and contaminated soils. Waste is introduced into a radiant zone where it is baked under the influence of glowbars to volatilize and partially destroy organic volitiles which contaminate the soil matrix. The gas produced in this radiant zone is transported to a secondary combustion zone where it is burned under high temperature conditions.

These systems are primarily designed for solids, liquid and sludge wastes may be introduced into the system on a solid matrix. The system is potentially transportable and offers a high degree of control, quick start-up and long residence times in the detoxification zone. Because the energy is introduced by a radiant mechanism, there is very low particulate emission in the effluent gas streams from the system.

In July of 1985, a Shirco system was tested at Times Beach and achieved a DRE greater than 99.999996 per cent for 2, 3, 7, 8 TCDD. In this same test, particulate emissions were less than 0.001 grains per dry standard cubic foot. At present, there are several operational units available and additional mobile units are under construction. Smaller scale pilot test units are also available from Shirco.

The Advanced Electric Reactor, which was originally developed by Thagard, uses a porous graphite tube as the radiant surface to heat waste material which is dropped though the tube. The radiant tube is heated electrically to temperatures up to 5,000° F. These systems are suitable for solids and liquids, however, some waste pre-treatment is generally necessary. Solid feed should be less than 35 US mesh size, and liquids should be atomized to less than 1,500 micron droplet size. The system can handle both organic and inorganic materials. Organic materials are usually volatilized and move in a counter-current direction to the flow of solids, which are dropped through the radiant graphite tube.

To maintain the integrity of the graphite tube under operating conditions, nitrogen is forced through the walls of the porous tube to provide an inert blanket which protects the graphite tube from oxidation. This system has been tested on a variety of wastes including PCBs, carbon tetrachloride, octa-dioxins, and tetra-dioxins. During each of these tests, feed rates were extremely low and destruction efficiency ranged from 99.999 per cent for tetra-dioxins to better than 99.99999 per cent for PCBs.

At present, two Advanced Electric Reactors are available in Borger, Texas. No units are as yet in commercial use, however, commercial units are under construction.

The Electric Pyrolyzer, which is a offshoot of the Shirco and Thagard systems, is at present being developed by Westinghouse. In this system, the zirconia lamps are used to provide a radiant mechanism to transfer energy to a soil matrix contaminated with organic toxic or hazardous material. Unlike the Shirco and Thagard systems, the electric pyrolyzer offers the advantage of a slagged solid matrix as its solid effluent discharge. Gases which are produced in the radiant zone are basically detoxified under the influence of the high temperature radiation. Some additional post-treatment of these gases may be required. At present, this unit is under development and published data on its performance is not yet available.

MONS 225247

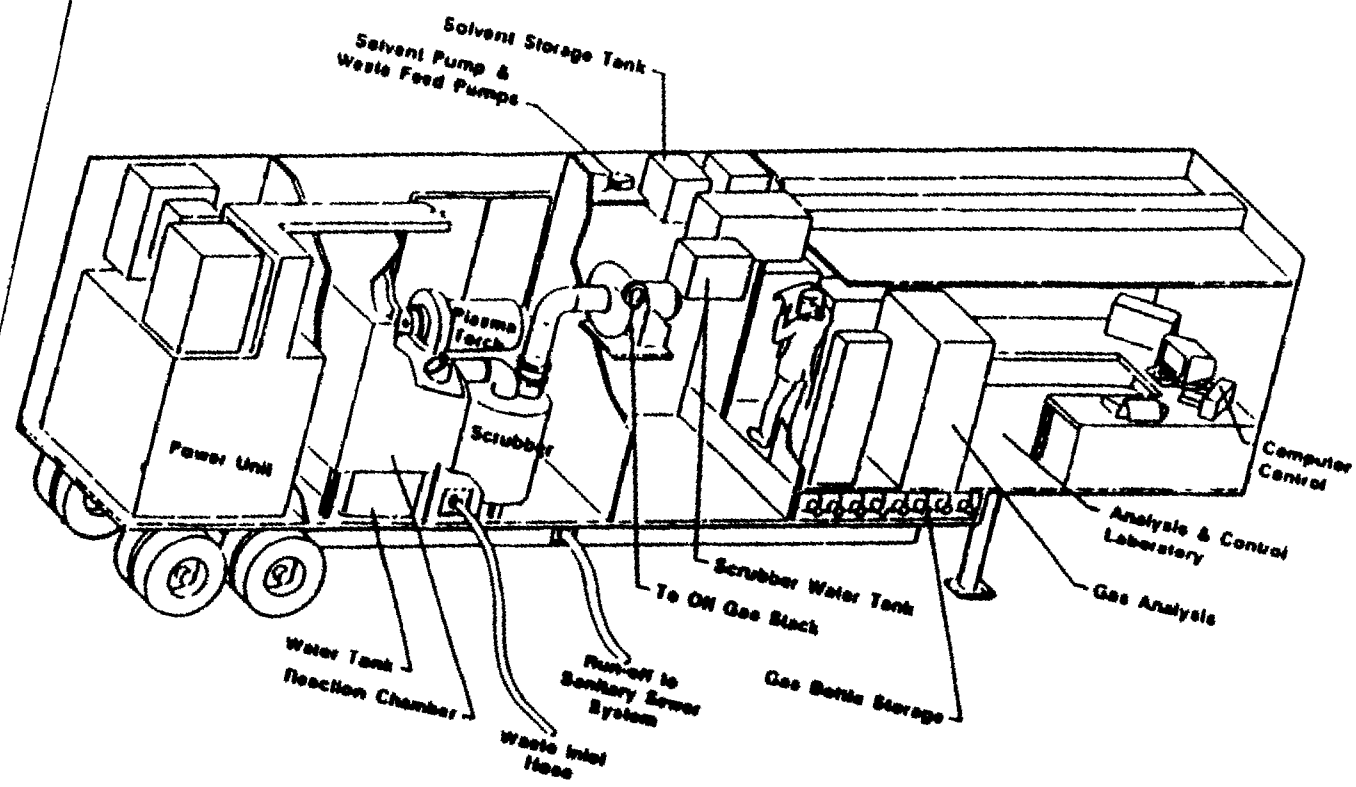

Figure 1: Pyroplasma Trailer Schematic

MONS 225248

Molten Salt Incineration

The molten salt process was developed by Rockwell International and was targeted at chlorinated liquid wastes, particularly PCBs. This technology achieves complete decomposition and destruction of hazardous chemicals by exposing these materials to a pool of molten sodium carbonate at a temperature of approximately 900°C.

This system is applicable to solid or liquid wastes which have a low ash content and low water content. The majority of the inorganic fraction is captured in the salt matrix during the combustion process which takes place within the reaction vessel. This is particularly beneficial when dealing with halogenated wastes, in that the chlorine becomes bound as a salt in the molten bed. Other metals which may be contained in the liquid or solid waste feed stream generally form metallic salts which may produce a problem for the ash disposal from this process. These metal salts are generally leachable and can cause some contamination if disposed of by traditional landfill techniques.

This system has been demonstrated on PCBs and showed a destruction efficiency better than 99.9999 per cent . A mobile system capable of treating 0.1 metric tons per hour has been tested. Larger scale systems are currently in production.

Pyrolysis

Pyrolysis offers an alternative technique for the destruction of organic liquid and solid wastes. Inorganic fractions which form part of the waste feed are generally captured in the pyrolytic system to form part of the ash residue. The pyrolysis of organic chlorides generally yield fuel gas and hydrogen chloride.

One of the most successful techniques for the destruction of PCBs involves the use of Pyroplasma™. During a 20-month period ending in April 1986, a completely mobile system for the destruction of hazardous or highly-toxic liquid organic waste had completed its initial testing in Canada. Upon completion of this testing, this unit was exported to the Love Canal waste site in New York State to undergo further demonstrations. This technology has been under development for the past 10 years, and gives extremely high destruction efficiencies and low emissions for typically hard to destroy toxic wastes. A joint venture company, Westinghouse Plasma Systems Inc., was formed by Westinghouse Electric Corporation and Pyrolysis Systems Inc. This joint venture company now markets Pyroplasma technology. The Pyroplasma™ unit, with a throughput rate of approximately 12 kg/min, is contained in a single 15-metre-long tractor trailer and requires connections to power, water and sanitary sewer to become completely operational. Mobilization requires only one to two days in order to be operational at a waste site.

The heart of the technology lies within the plasma torch. This electrical device efficiently converts electrical energy into thermal energy in the form of a heated gas with temperatures in excess of 10,000°C. The entire system is computer controlled with numerous safety, operational, and environmental failsafes, as well as continuous process gas monitoring. Destruction efficiencies in excess of 99.9999 per cent with low emissions of products of incomplete combustion make this technology both commercially and environmentally attractive.

A thermal plasma unit, properly applied to toxic waste destruction, provides a pyrolytic or reducing environment with several distinct advantages over conventional combustion technologies (3). The extremely high temperatures achieved assure high DREs and the reducing atmosphere reduces the production of oxygen containing PICs such as dioxins and furans. In addition, since the process is pyrolytic, the scale of the equipment is small and can be easily made mobile while still allowing for throughput rates as high as 12 kilograms per minute (Figure 1).

In 1982, Pyrolysis Systems Incorporated (PSI) of Canada signed a co-operative agreement with the New York State Department of Environmental Conservation (NYS DEC), providing funding for the design, construction, testing and operation at Love Canal of a four kilogram per minute commercial scale Pyroplasma unit. The first three phases of work are now complete and the last phase is awaiting the necessary permitting.

Process Description

The heart of the system is the plasma torch (Figure 2). A co-linear electrode arrangement and about 750 kilowatts (kW) of power are used to create an electric arc in the presence of a medium low pressure air. Electrical energy absorbed by the air molecules raises them to highly excited states, achieving temperatures in the 10,000°C range. Waste fluids are injected directly into the plasma tailflame. The extremely high temperatures associated with the plasma torch provide enough energy for completed atomization of the waste molecules thus providing very high DREs with relatively low

MONS 225249

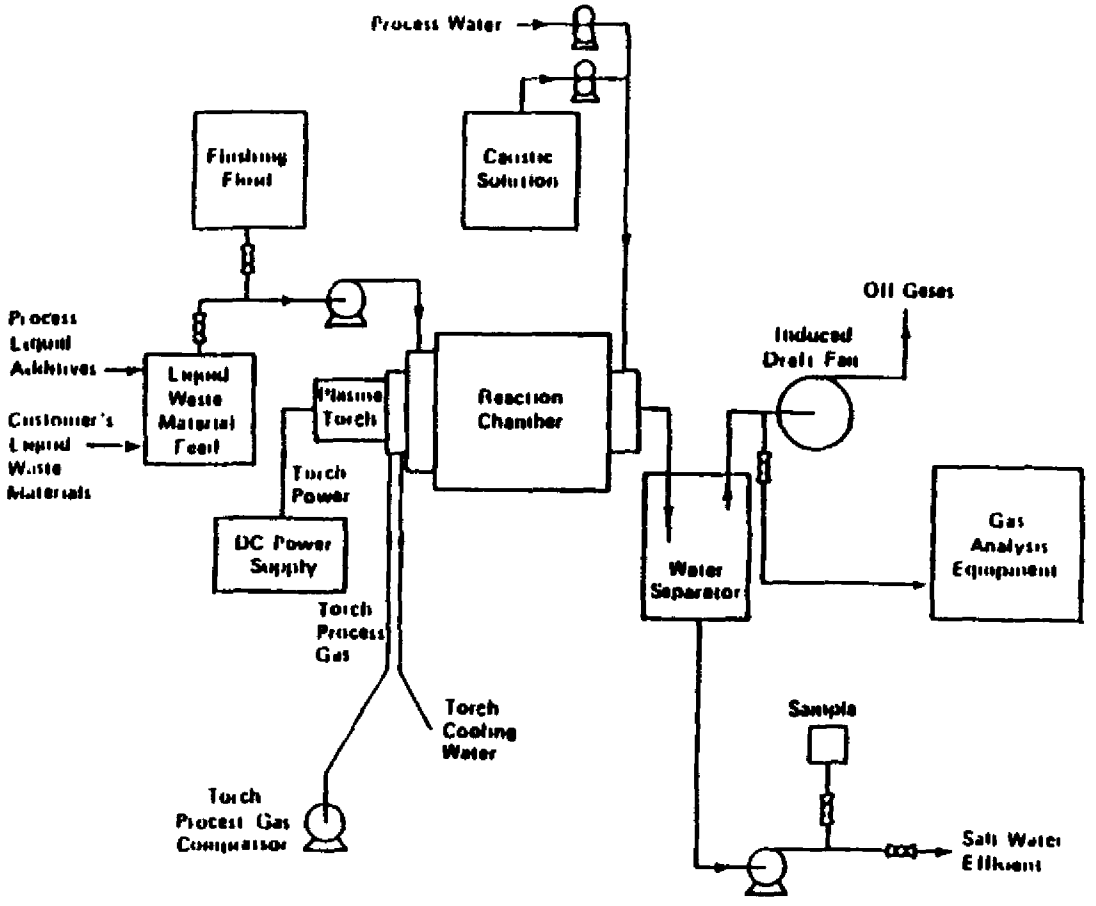

Figure 2: Pyroplasma Process Schematic

MONS 225250

energy requirements, typically less than one kilowatt-hour per kilogram of waste.

The atoms then react in a recombination chamber to form chemical equilibrium product. This product gas is typically comprised of about 50 per cent hydrogen, 30 per cent carbon monoxide, 15 per cent nitrogen and the remainder lower hydrocarbons such as methane and ethylene. Acid gas (HCl) formed from the destruction of chlorinated wastes is neutralized by caustic soda in a wet scrubber to give a slightly salted scrubber effluent which is discharged along with any particulate carbon that may be formed. The product gas is drawn off the scrubber by an induction fan which maintains a negative system pressure and the gas is flared. Fuel values of the product gas are between 2 and 3 times the actual power required for the torch. The composition of the gas may be altered by careful blending of the waste feed prior to destruction or by the addition of other constituents such as steam or air to the recombination chamber.

Operation begins with a non-toxic type solvent such as methanol and continues for about five to ten minutes until the recombination chamber stabilizes at a predetermined temperature, typically about 1,200 to 1,400°C. Stable chamber temperatures indicate adequate quenching of the torch power thus ensuring efficient destruction of the incoming waste. Since the destruction process is pyrolytic, occurring in the plasma field, system destruction efficiencies do not depend upon reactor chamber temperatures or residences times

Chamber temperature is controlled by adjustments in torch power, torch process gas flow or waste feed flow rate. The entire system is computer-monitored through a series of temperature, pressure, flow and electrical sensors, so that operational parameters and system efficiencies are maintained. There are a number of failsafes built into the system to minimize the risk to the environment even in the event of power failure, a worst-case situation. Carbon monoxide, carbon dioxide, hydrogen, oxygen and total hydrocarbons of the bulk gas are measured on line for comparison to theoretical models.

Testing

The Pyroplasma process is capable of destroying a wide spectrum of liquid organic wastes. Materials were selected for testing purposes to demonstrate the ability of the plasma to process difficult to destroy, highly-chlorinated wastes. In 1985 and early 1986, a rigorous series of tests were conducted with methyl ethhyl ketone (MEK), ethanol (EtOH), methanol (MeOH), carbon tetrachloride (CCl_4) and transformer askarel fluid (PCBs and trichlorobenzene). All tests were observed by both federal and state authorities from the United States, as well as federal, provincial and local Canadian authorities. All sampling and analyses were performed by external agencies as part of the New York State contract with PSI and the data has been reviewed and approved by the EPA.

Results

Mechanical operation of the mobile plasma pyrolysis system was first verified by processing a non chlorinated blend of MEK/MeOH (1 1 volume) Following this, three one-hour CCl_4 runs were conducted to demonstrate (i) the destruction efficiency with a hard to destroy chlorinated compound; (ii) the stability of the system upon exposure to high concentrations of chlorine; and (iii) the effectiveness of the scrubber for HCl removal. The CCl_4 was blended with MEK/MeOH/H_2O and fed at a rate of one kilogram of CCl_4 per minute. DREs were greater than 99.99995 per cent for all three runs based on measured residuals in all effluent streams. Stack emissions for CCl_4 were analytically non-detectable (see Table 1).

Following this stage of testing seven tests were performed using a blend of askarel (Aroclors 1254/1260 in trichlorobenzene) in MEK/MeOH to determine the PCB destruction capability of the process. Three one-hour, one two-hour, and three five-hour tests with feedstocks approximately 30 - 35 per cent by mass askarel gave DRES consistently greater than 99.99999 per cent (see Table 2).

Table 3 summarizes the HCL particulate NO_x, O_2, CO and $C0_2$ emissions for the flared product gas. Emissions of HCl particulate and NO_x were below accepted Canadian and American regulatory guidelines.

In addition to the high destruction efficiencies, emissions of products of incomplete combustion (PICs) were usually below detection limits in both the gas and water effluents. For example, no chlorinated dioxins were detected in either the gas or water effluents in PCB test #9, the highest PCB concentration test. These results are even more meaningful if you consider the relatively low gas and water volumes associated with this pyrolytic process in combination with the emission concentrations expressed in mass per unit volume

Prognosis

At present, two Pyroplasma trailers are operational

MONS 225251

and permit applications have been filed where applicable. Four more units are under construction to meet the anticipated growth in the need for their application. Additional research is being conducted to apply similar technology to the problem of solid hazardous and/or toxic waste.

References

1. Matey, J. S., and L. F. Tischler. 1984 Hazardous Waste Survey. *Journal of the Air Pollution Control Association*, 1984, 36(6), pp. 737-740

2. Rich, L. A., Hazardous Waste Management. *Chemical Week*, August 20, pp. 26-64

TABLE 1
CCl_4 Test Results

Test #	Mass (%)	Input (kg/hr)	Output Air (mg/hr)	Output Water (mg/hr)	Output Total (mg/hr)	DE (%)
1	35 0	64.2	29 27*	2.51	31 78	99.99995
2	40 0	80 6	22.79*	9 85	32.64	99.99995
3	35 0	64.2	22.99*	6.28	29.15	99.99995

*number reported is analytical detection limit

TABLE 2
PCB Test Results

Test	Mass (%)	Input (kg/hr)	Output Air (mg/hr)	Output Water (mg/hr)	Output Total (mg/hr)	DRE (%)
3	14 1	23.9	0 65*	4.09	4 73	99 999997
4	14 1	18.8	2.00	10.16	12.16	99 999994
5	11 5	19.8	8.96	18.76	25 72	99 99996
6	14 3	18.0	0 43*	0 41	0 84	99 999998
7	12 5	17 5	0.02*	93 12	93 14	99 999999
8	12 8	18.9	0.03*	19 56	19.59	99.999999
9	17.5	28 7	0 33	0.75	1 08	99.999999

*number reported is analytical detection limit

TABLE 3
Flared product gas parameters*

Test #	O_2 %	CO %	CO_2 %	HCl (mg /m³)	NO_x (ppm)	Particulate (mg/m³)
3	14 0	0 01	5.5	NA	117	10
4	14 5	0 01	5 0	43 0	NA	180.00
5	16.5	0.01	3.0	68 0	139	12.5
6	15 8	0 00	3.8	1 07	96.0	15 84
7	14 0	0 00	5.1	2 68	115	07.60
8	15 3	0 00	4 3	1 30	106	10.96
9	13 3	0 00	5 2	26.8	81	11 9

* Refers to PCB tests #3— #9 of Table 2

MONS 225252

The Role of the Fire Service and PCBs

Ben Bonser
Chief,
Toronto Fire Department

The fire service is usually the first of several emergency responders to a PCB incident and the role of the first responder is to attempt to stabilize the situation until such time as we can call in the agencies who are responsible for conducting the clean-up, particularly in the hazardous goods incidents.

In major urban areas, the police and the fire service would be on the scene, but in rural and highway situations, you will find that the police arrive on the scene and then attempt to call in other assistance. In many, many cases, it is volunteer fire departments that respond. It should be remembered that the resources that fire service resources in those particular areas are not the same as in major urban centres. Therefore, it is the responsibility of the owner of the product or the various agencies, to make certain that they are aware of the resources and experience of the local fire service that would be called on to deal with emergencies involving PCBs.

The City of Toronto has developed a comprehensive program to cope with dangerous goods and those involving, of course, PCBs. We have heard this morning mostly, and throughout most of the day, about situations when PCBs are stable. We, however, usually arrive on the scene when there is a spill, a leak or a fire. And, as you have also heard, the public is very concerned these days about the environment and health effects as they relate to PCBs.

PCBs, of course, are very unstable, and we could have a very serious situation. As first responders, it is extremely important that we are advised of the nature of the substance of the dangerous goods that is involved and the necessary precautions that should be taken to deal with the emergency effectively

Information Collection

Pre-fire planning and pre-emergency planning are some of the major roles that the fire service plays in preparing themselves for these types of emergencies. To ensure that there is sufficient data available, the Toronto Fire Department's Planning and Research Division has been compiling information on hazardous materials and committing it to microfiche since 1978. This data collection process that we now have provides information and first-strike action which is placed on microfiche for approximately 1,000 common chemicals. This information is available at the Communications Centre and also in all of our command vehicles. Information concerning the location of PCBs throughout the city was compiled by our Planning and Research Division staff from data received from Environment Canada, as well as from fire inspectors during regular inspection programs.

Information sheets have been compiled concerning PCBs, to show the type of equipment, usually transformers and capacitors, the quantity of the equipment and the amount of litres of liquid contained in the items on the premises. These information sheets are then microfiched and can be accessed either by street address or by the name of the company owning the equipment.

One of the first actions upon arrival at the scene is confirmation of whether there are PCBs on the premises. This may be of concern to the owner of the premises but it is a matter of operating policy that we confirm by radio with our Communications Centre to ensure that there are or are not PCBs. The updating of the records, of course, is a continuing program and we have a pre-fire planning and inspection program which

MONS 225253

is on-going throughout the city.

This pre-fire planning program permits firefighting crews to go out through various buildings and find the high risk locations. They prepare floor plans, and identify existing safety equipment and potentially hazardous products that might be on the premises. The information then is redrawn to scale and is microfiched so it is ready and available as resource information in the event of an emergency. This would be both available at the Communications Centre as well as in the command vehicles.

Information, of course, concerning PCBs are located in many manuals which we have available to us. For example, in dealing with the potential health hazard of PCBs, like in most occupations, we are concerned about the health of the individual firefighter and we insist that they wear protective clothing if they are going to attend a PCB incident.

With the computerized dispatch systems that we have, we can provide a printout in the local fire station so that the responding vehicle will get the information to take with them to the alarm. The printout contains a warning message about PCBs for those known locations and, where required, will give the appropriate microfiche cross-reference number. This allows all incoming firefighter crews to be alerted to the potential problem they may encounter.

At the Scene

Once it has been confirmed that there is any kind of a dangerous product on the site, department policies, in regard to fire rescue, suppression and exposure, can be implemented immediately. It is extremely important that we know if there is a hazardous product on the premises. We then can take those extra precautions. Of course, with PCBs, all doorways leading to rooms containing PCBs are usually clearly identified with the appropriate plaque arting.

The Toronto Fire Department has a specialized hazardous material vehicle which will respond to any significant PCB leak, spill or fire and will also serve as a resource vehicle and command post.

We were fortunate during the design of the vehicle to have industry and all of the various organizations who deal with hazardous materials, assist us in the design of the vehicle, as well as give us advice on equipment we should carry. The vehicle also carries a variety of special equipment and reference material and has the capability of an office-type command workstation in the event of an incident. Inside, the incident commanders can operate from this command area with map and floor plans, that can be mounted and referred to easily to assist in the stabilizing of the incident.

If additional apparatus is required at the scene, it is brought to what we refer to as the staging area, and kept away from the incident until such time as the incident commander requires this additional manpower. This is to keep the other vehicles and personnel, of course, out of the contaminated zone. Personnel responding to a PCB incident, will be instructed to use a special tactical channel for radio communications, thereby ensuring that we have uninterrupted communications at the emergency scene.

The central communications control acts as a liaison between the emergency scene and other agencies and this allows us to not only notify the agencies of what we are required to do, but also serves as a post for the media to get information about what is going on. This also removes some of the pressure from the incident commander who is at the scene and does not have time to talk to the media.

Firefighters will only enter a room or a vault to investigate any emergency under certain control procedures. The other crews are kept away until the size-up is completed and the identification has been confirmed. We have a responsibility to report any matter to the Ontario Ministry of Environment, even if it is a small amount of PCB liquid that has been leaked.

In the case of electric utilities, we do not have a problem. This is because they are on the scene and they have their own personnel to take care of the spills, with their own equipment and we usually work in fairly good harmony with these personnel and assist if we can.

In the case where there is a substantial amount of PCBs or any dangerous goods, the authorities are notified and then we immediately attempt to curtain off the area. One of the things involving any incident of this nature is crowd control and the police do an adequate job of attempting to control, the crowd to keep them at least 800 metres away from the point of contamination.

One example of a very minor PCB incident is one that usually involves ballasts for fluorescent lighting or high-intensity discharge lighting. Usually, what we attempt to do is to stop the leaking ballasts with rags. We dispose of these rags in a garbage bag and put them out with the normal garbage as per the Ministry of Environment instructions for something that is as minor as a rag that might be contaminated with PCBs. Also, we use mineral oil for the clean-up and the firefighters usually go through a minor wash-up period until such

MONS 225254

time as they feel comfortable they have not any contaminant on their hands.

We also have what we call a Precautionary Exposure Report which is filled in by all personnel who might be involved at the scene. The Medical Division is also notified that they had an exposure. Here again, we have another precaution. I think it is extremely important that we follow three good guidelines: to isolate all the emission sources; not to touch the spill material, if at all possible, and to stop the leak, if possible, without risk. These are the guidelines that the firefighters would be using in a PCB incident.

Of course, for the protection of personnel, we do have the disposal suits if firefighters are going to be involved in a leak situation.

Another thing that we are extremely concerned about is liquids. Because PCBs are heavier than water, we attempt to divert the water from drains and sewers. We use whatever we can, such as using absorbent material or sand; we build diking, anything at the top to try and stop the product from spreading further into the environment and hope that the appropriate authorities arrive on the scene to finish the clean-up as soon as possible.

The fire department has been known to order a sand truck out to try and get some sand in the area, for us to control the movement of the product. The clean-up and disposal of PCBs is not the responsibility of the fire department and, therefore, we usually attempt to get the appropriate officials to do that as quickly as possible.

Fires and PCBs

Fires involving PCBs are a concern because they sometimes change the method in which we operate, on the basis of attempting to extinguish the fire. In the case of small fires, of course, we can use dry chemical or CO_2 extinguishers. In larger fires, we will attempt to use spray or foam, using a minimum of water because of the concern of run-off and then attempt to move the vessels possible from the fire scene. If some of the products are in drums, we will attempt to move them away from the fire area and, therefore, reduce the risk of contamination.

PCBs, as we have heard today, burn under certain specific conditions. We are advised the temperature should be between 250 and 700 degrees, with 500 to 600 degrees an optimum combustion range. The atmosphere must also contain the right amount of oxygen if it is going to be successful to be burned. PCBs that are burning are toxic, particularly the furans and the dioxins that are the products of combustion.

Decontamination Procedures

From an emergency service perspective, we stress the importance of having all our personnel take greater care concerning decontamination. We have attempted to make certain that people leave the scene with the understanding that they are going to do something to decontaminate themselves. The incident commander has to make the decision of what level of decontamination is necessary and what extent this can be done at the actual scene. With incidents involving PCBs, we follow the most stringent level of decontamination.

The Canadian Association of Fire Chiefs has prepared a decontamination manual and it is available and our personnel have contributed towards the production of this document. Even when changing a cylinder at the scene of a PCB incident, it requires the washing down of an individual. Usually, we have the person who is washing the other individual down have full protective clothing on himself.

After the use of any equipment in a PCB incident, all of this equipment is placed in garbage bags and taken for subsequent thorough decontamination. The persons involved are required to wash at the scene before removing any of their clothing. In returning to the fire station, they have the second phase of decontamination. The precautions that are taken are ones that will protect the individuals who have been exposed to the products of combustion involving a PCB fire.

In the case of what we might think is a serious exposure, personnel may be referred to the emergency department of a hospital for further check-up and in that way, we can establish a clear case of monitoring the individual over a period of time.

In summary, I just want to again emphasize that the program that is reviewed is one that will exist mostly in urban region centers and in smaller municipalities. It is the responsibility of the industry and the users to the product to take the initiative to provide their local emergency services with adequate information about the location of equipment containing PCBs or waste material containing PCBs.

Our primary objective when it comes to the handling of a PCB incident is to ensure that the threat to life and the environment is minimized, and we trust that the role that the fire service plays in these situations will be complemented by the authorities and industries who are responsible for the safe use and disposal of PCBs.

MONS 225255

Part 3

Canadian Directory of PCB Service Companies

MONS 225256

Canadian Directory of PCB Service Companies

British Columbia

B.C. Research
3650 Wesbrook Mall
Vancouver, B.C.
V6S 2L2
Tel: (604) 224-4331
Fax: (604) 666-7035
Chemical analysis, isomer characterization (GC-MS); occupational health assessments; soil decontamination.

Can Test Ltd.
1523 West 3rd Avenue
Vancouver, B.C.
V6J 1J8
Tel: (604) 734-7276
Fax: (604) 731-2386
Can Test offers a complete range of laboratory analysis. This includes testing related to trace organics, trace metals, water quality, industrial hygiene and product control.

Golder Associates
224 West 8th Avenue
Vancouver, B.C.
V5Y 1N5
Tel (604) 879-9266
Golder Associates provides a complete range of geotechnical and hydrogeological consulting services throughout Canada and the U.S. related to the assessment of soil and groundwater contamination due to PCBs, sampling and monitoring, spill investigations, site remediation and engineered waste containment.

Other Location:
243-1899 Springfield Road
Kelowna, B.C.
V1Y 5V5
Tel (604) 860-8424

John French Consultants Ltd.
P.O. Box 46604, Station G
Vancouver, B.C.
V6R 4G8
Tel: (604) 224-0834
Training and consulting services concerning dangerous goods and WHMIS.

Monenco Consultants Limited
601 West Cordova Street,
Suite 130, The Station,
Vancouver, B.C.
V6B 1G1
Tel: (604) 687-0331
Technical consultation and complete engineering, procurement and construction (or construction management) services for hazardous chemical spill delineation, clean-up, treatment and site rehabilitation, waste treatment system design and upgrade. Also, hazardous chemical spill contingency planning and occupational hygiene consulting services.

Robertson Barrier Systems Corporation
801 — 1030 W. Georgia Street
Vancouver, B.C.
V6E 2Y3
Tel: (604) 684-6072
Fax: (604) 687-5532
Fully testable liner systems for hazardous materials containment facilities, optimizing the attributes and compensating for the deficiencies of existing geosynthetic materials and seaming technology. Enables system testing during construction and throughout its operating life, to confirm liner integrity, detect the onset of leaks, and counteract leakage.

Sutek Instruments
3939 Sunnycrest Drive
North Vancouver, B.C.
V7R 3E1
Tel: (604) 987-9329
Fax: (604) 681-6825
Sutek Instruments provides a sales and rental service for water, sediment, and biological sampling equipment and water quality monitoring instrumentation. We also provide research and development services for new sampling problems and aquatic environmental consulting services.

Westinghouse Canada Inc.
Services Division
13300 Vulcan Way
Richmond, B.C.
V6V 1K2
Tel: (604) 278-9641
Fax: (604) 278-3129
Westinghouse Canada offers the "single supplier solution" to your PCB problems. Operating from over 40 locations, our skilled PCB trained field service specialities develop and implement environmental cost effective turn key projects or handle small jobs for you. Our services include: Lab analysis, site and equipment risk analysis, equipment repair or replacement non-PCB in nature, site storage, disposal, transportation, chemical decontamination and the TransForm process for declassifying askarel transformers

MONS 225257

Other Locations:

1609 Fremont Rd.
Nanaimo, B.C.
V9S 3H3
Tel (604) 758-9171
Fax. (604) 758-2429

2235 Nicholson St N
Prince George, B C.
V2N 1V9
Tel: (604) 562-5571
Fax: (604) 563-0851

481 Cecelia Rd.
Victoria, B C
V8T 4T4
Tel. (604) 382-7285
Fax (604) 382-5334

Alberta

Chemex Labs Alberta Inc.
2021 41st Ave. N.E.
Calgary, Alta.
T2E 6P2
Tel: (403) 291-3077
Fax: (403) 291-9468
Analysis of PCBs in oil, water, soil and biological tissue.

Chem Security Ltd.
1323 44th Ave N.E.
Calgary, Alta.
T2E 6L5
Tel: (403) 250-3742
Fax. (403)250-3909
Transportation and incineration of Askarels, PCB contaminated mineral oil, PCB contaminated soil, capacitors, and ballasts. Transportation, decontamination and disposal of transformer carcasses. These services are provided at the Alberta Special Waste Treatment Centre operated by Chem Security Ltd. near Swan Hills, Alberta.

Other Location:

1202 - 8A Street, P O. Box 312
Nisku (Edmonton), Alta.
T0C 2G0
Tel (403) 955-9462
Fax (403) 955-2115

Custom Environmental Services Ltd.
9241 35th Ave
Edmonton, Alta.
T6E 5Y1
Tel (403) 450-2010
Fax (403) 436-4130
Complete PCB waste management services, assessment, analysis, spill clean-up, fire clean-up, packaging, transporation, "Certified Disposal", in-house staff training, self-contained storage, special products for storage and transportation, mineral oil/PCB fluid assessment, retrofill, manpower, safety supplies, equipment. These PCB services are based on "Proven past results since 1979".

GCG Dillon Consulting Ltd.
Number 23 Building B
17420 Stony Plain Rd
Edmonton, Alta.
T5S 1K6
Tel: (403) 483-8094
GCG Dillon consultants provide PCB hazard assessment, waste management and PCB waste disposal.

Other Locations:

374 Gregoire Dr.
Fort McMurray, Alta.
T9H 3R2
Tel: (403) 791-7373

102-5000-50th Ave.
Red Deer, Alta.
T4N 6C2
Tel: (403) 343-7533

Golder Associates
7017 Farrell Rd., S.E.
Calgary, Alta.
T2P 0T3
Tel: (403) 259-3413
Golder Associates provides a complete range of geotechnical and hydrogeological consulting services throughout Canada and the U.S. related to the assessment of soil and groundwater contamination due to PCBs, sampling and monitoring, spill investigations, site remediation and engineered waste containment.

Monenco Environmental Services
400 Monenco Place
801 — 6th Ave S W
Calgary, Alta.
T2P 3E3
Tel (403) 298-4170
Technical consultation and complete engineering, procurement and construction (or construction management) services for hazardous chemical spill delineation, clean-up, treatment and site rehabilitation, waste treatment system design and upgrade. Also, hazardous chemical spill contingency planning and occupational hygiene consulting services

Other Location:

12420 - 104 Ave.
Edmonton, Alta.
T5N 3Z9
Tel: (403) 482-5456

Western Research
1313 - 44th Ave. N.E.
Calgary, Alta.
T2F 6L5
Tel: (403) 291-1313
Fax: (403) 250-3909
Western Research offers comprehensive PCB sampling and analytical services, PCB spill site investigations, site characterization and clean-up services, transformer decommissioning services.

Westinghouse Canada Inc.
Services Division
1857 Centre Ave S E
Calgary, Alta.
T2E 6L3
Tel: (403) 273-0991
Fax: (403) 235-4440
Westinghouse offers the "single supplier solution" to your PCB problems. Operating from over 40 locations, our skilled PCB trained field service specialties develop and implement environmental cost effective turn key projects or handle small jobs for you. Our services include: Lab analysis, site and equipment risk analysis, equipment repair or replacement non-PCB in nature, site storage, disposal, transportation, chemical decontamination and the TransFormer™ process for declassifying askarel transformers

Other Locations:

MONS 225258

2235A 27th Ave
Calgary, Alta.
T2E 7M4
Tel. (403) 250-5570
Fax: (403) 291-5257

8011 Davis Rd
Edmonton, Alta.
T8E 4Z8
Tel: (403) 465-7541
Fax: (403) 465-5802

230 Macalpine Cres.
Fort McMurray, Alta.
T9H 4A6
Tel: (403) 743-6123
Fax: (403) 791-2179

Saskatchewan

Golder Associates
2121 Airport Dr . Suite 210
Saskatoon, Sask.
S7L 6W5
Tel: (306) 665-7989
Golder Associates provides a complete range of geotechnical and hydrogeological consulting services throughout Canada and the U.S. related to the assessment of soil and groundwater contamination due to PCBs, sampling and monitoring, spill investigations, site remediation and engineered waste containment.

M.M. Dillon Ltd.
199 North Leonard St.
Regina, Sask.
S4N 5X5
Tel: (306) 949-8000
M.M. Dillon consultants provide PCB hazard assessment, waste management and PCB waste disposal.

PPM Canada Inc.
145 Henderson Dr.
Regina, Sask.
S4N 5W4
Tel: (306) 949-8666
Fax: (306) 775-2121
PPM Canada provides PCB analysis and destruction, transformer decontamination for reuse or disposal. Also drums, tanks, rectifiers are decontaminated for reuse or disposal.

Saskmont Engineering Ltd.
335 Hoffer Dr
Regina, Sask.
S4N 6E2
Tel: (306) 924-0770
Technical consultation and complete engineering, procurement and construction (or construction management) services for hazardous chemical spill delineation, clean-up, treatment and site rehabilitation, waste treatment system design and upgrade. Also, hazardous chemical spill contingency planning and occupational hygiene consulting services.

Westinghouse Canada Inc.
Services Division
545 Dewdney Ave. E.
Regina, Sask.
S4N 4E9
Tel: (306) 352 5606
Fax: (306) 352-1563
Westinghouse Canada offers the "single supplier solution" to your PCB problems. Operating from over 40 locations, our skilled PCB trained field service specialties develop and implement environmental cost effective turn key projects or handle small jobs for you. Our services include: Lab analysis, site and equipment risk analysis, equipment repair or replacement non-PCB in nature, site storage, disposal, transportation, chemical decontamination and the TransForm process for declassifying askarel transformers.

Other Location:

800 - 47th St. E.
Saskatoon, Sask.
S7K 0X4
Tel: (306) 934-5256
Fax: (306) 934-6861

Manitoba

Bioquest International Inc.
3-1329 Niakwa Rd.
Winnipeg, Man.
R2J 3T4
Tel: (204) 254-0712
Standard toxicity bioassays testing and quality monitoring

Other location:

203-52 Donald St.
Winnipeg, Man
R3C 3Z6

M.M. Dillon Ltd.
6 Donald St. S.
Winnipeg, Man.
R3L 0K6
Tel: (204) 453-2301
M.M. Dillon consultants provide PCB hazard assessment, waste management and PCB waste disposal

Teshmont Consultants Inc.
1146 Waverly St.
Winnipeg, Man.
R3T 0P4
Tel: (204) 284-8100
Technical consultation and complete engineering, procurement and construction (or construction management) services for hazardous chemical spill delineation, clean-up, treatment and site rehabilitation, waste treatment system design and upgrade. Also, hazardous chemical spill contingency planning and occupational hygiene consulting services.

The Dangerous Goods Institute
115-79 Swindon Way
Winnipeg, Man.
R3P 0X2
Tel: (204) 832-9706
The Dangerous Goods Institute provides regulatory briefings, training seminars and consulting services for industry across Canada.

Westinghouse Canada Inc.
Services Division
1460 Ellice Ave.
Winnipeg, Man.
R3G 3K3
Tel: (204) 775-8643
Fax: (204) 772-1540
Westinghouse Canada offers the "single supplier solution" to your PCB problems. Operating from over 40 locations, our skilled PCB trained field service specialties develop and implement environmental cost effective turn key projects or handle small jobs for you. Our services include: Lab analysis, site and

MONS 225259

equipment risk analysis, equipment repair or replacement non-PCB in nature, site storage, disposal, transportation, chemical decontamination and the TransForm process for declassifying askarel transformers.

Ontario

Acres International Ltd.
5259 Dorchester Rd., P.O.Box 1001
Niagara Falls, Ont
L2E 6W1
Tel: (416) 374-5200
Fax: (416) 374-5446
In-house laboratory, complete range of services, design and execution of sampling programs, testing, chemical analysis, interpretation of findings, design of remedial measures. Professional staff provide relevant analytical information about PCBs for monitoring, court testimony and other requirements.

Atomic Energy of Canada Ltd.
Chalk River Nuclear Laboratories
Chalk River, Ont.
K0J 1J0
Tel: (613) 584-3311
Chalk River Nuclear Laboratories offers accident and fire resistant, reuseable, protective overpacks for the safe transportation and storage of dangerous and hazardous wastes. The company also conducts performance testing of packaging for dangerous goods/hazardous wastes.

Brammall Canada
106 Advance Rd.
Toronto, Ont.
M8Z 2T7
Tel: (416) 233-2828
Fax: (416) 233-7883
Integrity and high security transportation seals.

Bross and Associates
3471 Kennedy Rd.
Scarborough, Ont.
M1S 3B2
Tel (416) 299-4224
Fax (416) 299-7796
Leak sealing of PCB transformers.

PCB advisory services, risk analysis, decontamination services, PCB in oil testing of transformers, forensic engineering and failure analysis.

Canviro Analytical Laboratories Ltd.
178 Louisa St.
Kitchener, Ont.
N2H 5M5
Tel (519) 579-4230
Fax; (519) 579-6365
Canviro Analytical Laboratories Ltd. (CALL) specializes in the rapid, accurate, and cost effective analysis of water, wastewater, sludge and hazardous waste.

CANVIRO CONSULTANTS

Canviro Consultants
A Division of CH2M Hill Engineering
180 King St. S., Suite 600
Waterloo, Ont.
N2J 1P8
Tel: (519) 579-3500
Fax: (519) 579-6666
Complete consulting services related to PCBs including the development of PCB management and spillfire contingency plans, collecting samples at spillsites, laboratory data analysis, development of remedial action plans and site supervision. CANVIRO has a fully equipped laboratory facility for PCB analysis.

CRA
Consulting Engineers

Conestoga-Rovers and Associates Ltd.
651 Colby Dr.
Waterloo, Ont.
N2V 1C2
Tel: (519) 884-0510
Fax: (519) 884-0525
Conestoga-Rovers and Associates Ltd. is a Canadian-based consulting firm with considerable experience in PCB related environmental problems. CRA's experience with PCBs includes negotiation with regulatory agencies and remediation including negotiation with regulatory agencies and remediation including transformer sampling, contaminant control water treatment, site remediation, plant decontamination and sampling procedures for contamination definition.

Continental Decal Industries Inc.
1911 Albion Rd
Rexdale, Ont
M9W 5S8
Tel: (416) 674-5611
Fax: (416) 674-8168
Custom made and stock decals and labels. Dangerous goods placards and labels. CSA and UL approved labels, membrane switches, product identification labels, E D P labels fleet identification, face plates and control panels.

Enervac Corporation
700 Franklin Blvd.
Cambridge, Ont.
N1R 5W6
Tel: (519) 623-9890
Fax: (519) 623-8250
Enervac is a fabricator of PCB decontamination systems.

ENVIROCLEAN

Enviroclean
A Division of MacLaren
Planasearch Inc.
320 Adelaide St. S
London, Ont.
N5Z 3L2
Tel: (519) 686-7558
Laboratory analysis including PCBs in transformer oil. Field sampling. Occupational health monitoring. Process evaluation and site audits Site clean-up.

Giffels Associates Ltd.
30 International Blvd.
Rexdale, Ont.
M9W 5P3
Tel: (416) 675-5950
Fax: (416) 675-4620
Giffels Associates Limited consulting engineers and architects can provide through their electrical and environmental groups, specialist services relating to PCB spills and clean-ups

MONS 225260

decommissioning strategies for PCB containing equipment and the design of interim PCB storage facilities

Golder Associates
3151 Wharton Way
Mississauga, Ont
L4X 2B6
Tel: (416) 625-0094, 823-1433
Fax: (416) 625-5873
Golder Associates provides a complete range of geotechnical and hydrogeological consulting services throughout Canada and the U.S. related to the assessment of soil and groundwater contamination due to PCBs, sampling and monitoring, spill investigations, site remediation and engineered waste containment.

Other Locations

1796 Courtwood Cres.
Ottawa, Ont.
K2C 2B5
Tel: (613) 224-5864

111 Industrial Dr
Whitby, Ont.
L1N 5Z9
Tel: (416) 666-4841
500 Nottinghill Rd.
London, Ont.
N6K 3P1
Tel (519) 471-9600

2625 Lauzon Pkwy ,Ste. 14
Windsor, Ont.
N8T 3W5
Tel (519) 945-5500

G.T. Wood Company Ltd.
3354 Mavis Rd
Mississauga, Ont.
L5C 1T8
Tel: (416) 272-1696
G.T. Wood is a specialist in the inspection, testing, maintanence, repairing and conversion of electrical distribution apparatus such as transformers and high and low-voltage switchgear.

Hatch Associates Ltd.
21 St Clair Ave E.
Toronto, Ont.
M4T 1L9
Tel: (416) 962-6350
Fax: (416) 962-0622
Consulting engineering services to heavy industry, power utilities and transportation utilities. Services include R&D, specialized technical consulting, design, procurement and construction management services. Design services include all classical disciplines plus environmental and occupational health and safety engineering.

Hunter Drums Limited
1121 Pioneer Rd.
Burlington, Ont
L7M 1K5
Tel: (416) 335-5201
Fax (416) 332-5515
New steel and plastic tight head and open head drums

Ian Elliott Ltd.
425 University Ave , Ste 401
Toronto, Ont.
M5G1T6
Tel: (416) 596-5440
Fax: (416) 598-3764
Environmental impairment (pollution) liability insurance, including storage, transportation, handling, decontamination, incineration and otherwise handling, owning or responsible for Polychlorinated Biphenols (PCBs).

Independent Measurement and Technology Inc. (IMET)
58 - 1271 Denison St.
Markham, Ont.
L3R 4B5
Tel: (416) 477-4638
Fax: (416) 470-1792
Independent Measurement and Technology Inc. (IMET) is an engineering support service firm focusing on the provision of an air and gas measurement sampling service to address air measurement requirements in the outside encvironment, working environment and office environment and to address the more efficient operation of combustion processes such as kilns, industrial boilers and waste incinerators

MacLarentech Inc.
33 Yonge St.
Toronto, Ont.
M1T 1E7
Tel: (416) 365-7293
Fax: (416) 367-3551
Complete engineering services provided for the reduction, removal, treatment, and disposal of hazardous wastes. PCB control, disposal, and management is a major service field PCB related projects by MacLarentech specialists include site investiga-

ENVIROCLEAN
Division of MacLaren Plansearch
[illegible] STREET SOUTH, LONDON, ONTARIO
CANADA [illegible] · TELEPHONE: [illegible]

comprehensive environmental laboratory and field services

LABORATORY ANALYSIS
- Atomic Absorption
- Gas Chromatograpy
- GC/MS
- TOX, DOC, TOC
- Hazardous Waste Evaluation
- PCB Transformer Oil Analysis

OTHER SERVICES
- Process Evaluation
- Effluent Sampling
- Stack Sampling
- Industrial Hygiene Surveys

Lavalin

MONS 225261

tions, development of management strategies, clean-up of spills and decontamination of equipment and sites

Mann Testing Laboratories
5550 McAdam Rd.
Mississauga, Ont.
L4Z 1P1
Tel: (416) 890-2555
Fax: (416) 890-0370
Analysis and identification of PCBs in environmental and industrial samples ie.: oil, soil, water, air, swabs.

M.M. Dillon Ltd.
47 Sheppard Ave E.
Willowdale, Ont.
M2N 6H5
Tel: (416) 229-4646
M.M. Dillon consultants provide PCB hazard assessment, waste management and PCB waste disposal.

Other Locations:

1425 Bishop St.
Cambridge, Ont.
N1R 6J9
Tel: (519) 623-6761

Ste. 401, 150 Kent St.
Ottawa, Ont.
K1P 5P4
Tel: (613) 238-6423

495 Richmond St.
London, Ont.
N6A 6N4
Tel: (519) 438-6192

1361 Ouellette Ave.
Box 697
Windsor, Ont.
N9A 6N4
(519) 258-5000

Monenco Consultants Limited
155 Rexdale Blvd., Ste. 500
Rexdale, Ont.
M9W 5Z8
Tel: (416) 743-3456
Fax: (416) 743-2928
Technical consultation and complete engineering, procurement and construction (or construction management) services for hazardous chemical spill delineation, clean-up, treatment and site rehabilitation, waste treatment system design and upgrade. Also, hazardous chemical spill contingency planning and occupational hygiene consulting services.

Other Locations:

One St Paul Street, P.O. Box 1540
St. Catharines, Ont.
L2R 7J9
Tel: (416) 688-9263

220 Laurier Ave. W., 8th Fl.
Ottawa Ont.
K1P 5Z9
Tel: (613) 236-4478

ODL - ONTARIO DISPOSAL LTD.

ODL — Ontario Disposal Ltd.
P.O. Box 2255
Oshawa, Ont.
L1H 7V5
Tel: (416) 725-9202
Industrial waste trucking, hazardous waste disposal, site restoration in Ontario. Move PCBs with director's approval.

O.H. Materials of Canada Ltd.
2180 Speers Rd., P.O. Box 7010
Oakville, Ont.
L6J 6L5
Tel: (416) 847-1700
Fax: (416) 847-1488
O.H. Materials offers on-site, environmental services, ground water/soil treatment, decontamination facilities, mobile incineration, biorestoration, sampling/analysis, surface impoundment, dewatering/filtration, hazardous waste site cleanup, underground storage tank management, emergency response, explosive handling

Oil Canada Ltd.
309 Cherry St.

FAST, ACCURATE PCB ANALYSIS FROM MANN TESTING

We incorporated a High Hazard Laboratory into our facilities to provide you with rapid identification and quantitative analysis of samples. We can analyze oil, soil, water, or air and results are returned by telex, fax, and phone.

With dedicated instrumentation and personnel, we ensure accurate, priority service. So anytime you need PCB analysis, call us.

MANN TESTING LABORATORIES LTD.
5550 McADAM ROAD
MISSISSAUGA, ONTARIO, L4Z 1P1
PHONE (416) 890-2555
TELEX 06-960468 FAX (416) 890-0370

MONS 225262

Toronto, Ont
M5A 3L3
Tel: (416) 462-6105
Fax: (416) 462-6124
Fully equipped laboratory specializing in 1 day PCB service Call Oil Canada Ltd D A. Fisher (416) 462-6100

Ontario Research Foundation
2395 Speakman Dr
Mississauga, Ont.
L5K 1B3
Tel: (416) 822-4111
Fax: (416) 823-1446
The Ontario Research Foundation performs analysis for the full range of Canadian and American pollutants, with PCBs and PRHs being areas of Ontario Research Foundation specialization. Types of substrates include biological tissues, fluids, water, air, foodstuffs, process intermediates and product.

Ontario Waste Management Corporation
2 Bloor St. W., 11th Fl.
Toronto, Ont.
M4W 3E2
Tel: (416) 923-2916
Fax: (416) 923-7521
Services include laboratory analysis for PCBs in oil, water or soil samples at major, minor or trace levels; inexpensive preliminary screening for PCBs; confirmatory and quantitative analysis for PCBs by GC or GC/MS. Advice on sample collection, sample storage, in-house analysis and environmental monitoring.

PPM CANADA INC.

PPM Canada Inc.
1 Yonge St., Ste. 801
Toronto, Ont.
M5E 1E5
Tel: (416) 364-1919
Fax: (416) 364-1543
PPM Canada provides PCB anayisis and destruction, transformer decontamination for reuse or disposal. Also, drums, tanks, rectifiers are decontaminated for reuse or disposal.

— PCB Testing. —
Same Day Service

Our carefully controlled, multi-stage re-refining process produces a base stock of the highest quality Whether blended with additives for motor oil or prepared for other industrial uses, production from Oil Canada Ltd will merit complete confidence
We offer a complete service which includes

PCB Analysis & Reporting On A Daily Basis
Collection/Transportation
Demetallization
Filtration
Distillation
Hydrotreating
X-Ray, Infrared, Mass Specification

— Oil Canada Ltd. —
Canada's Largest Hydrotreating Re-Refinery

Oil Canada Ltd.
309 Cherry Street
Toronto, Ontario
M5A 3L3
(416) 462-6100

THE PROCTOR & REDFERN GROUP

Proctor and Redfern Ltd.
45 Green Belt Dr.
Toronto, Ont.
M3C 3K3
Tel: (416) 445-3600
Fax: (416) 445-5276
The Proctor and Redfern Group provide consulting services for the management of PCB-contaminated sites and materials, site investigation, laboratory analysis, site remediation plans, tender and contract preparation, environmental monitoring, health and safety programs, regulatory agency liaison, siting alternatives and final disposal alternative evaluation.

Reteck Resource Recovery
P O. Box 1584
Brantford, Ont.
N3T 5V6
Tel: (519) 756-9770
Reteck is currently handling waste from PCB destruction. Licensed by the Ministry of Environment to accept PCB-contaminated oil and oil water with levels below 50 PPM.

RONDAR INC

Rondar Inc.
333 Centennial Pkwy N
Hamilton, Ont
L8E 2X6
Tel: (416) 561-2808
Fax: (416) 664-2847
Decontamination of PCB Transformer oils up to 7,000 PPM of PCBs. Complete on-site oil handling services including transformer and substation electrical testing an laboratory analysis, askarel transformer maintenance and site repairs, gaskets, bushings etc In-house oil laboratory analysis: P P.M. of PCB - Askarel - 5 Part Oil - Dissolved Gas in Oil - Power Factor - P P M. of Water

Safety House of Canada Limited
1275 Castlefield Ave
Toronto, Ont.
M6B 1G4
Tel: (416) 789-0631
Fax: (416) 782-0813

MONS 225263

THE PROCTOR & REDFERN GROUP

Engineering, Planning, Architecture, Landscape Architecture

CONSULTING SERVICES
PCBs

management of PCB contaminated sites and materials
site investigations
laboratory analyses
site remediation plans
tender and contract preparation
site supervision
environmental monitoring
health and safety programs
regulatory agency liaison
siting alternatives
final disposal alternative evaluation

Regional and Branch Offices

Brampton, Hamilton, Kenora, Kingston, Kitchener, London, North Bay, Ottawa, St. Catharines, Sault Ste. Marie, Simcoe, St. John's Nfld., Sudbury, Thunder Bay

Head Office

45 Green Belt Drive, Don Mills, Ontario, M3C 3K3
Telephone (416) 445-3600 Fax (416) 445-5276

RONDAR INC

OIL PROCESS DIVISION
TRANSFORMER
MAINTENANCE SPECIALIST
— Oil and Askarel —

- P.C.B. Decontamination
- Retrofilling
- Upgrading and degassification
- Oil Laboratory Analysis
  - P.P.M. of P.C.B.
  - 5 Point Oil Tests
  - 4 Point Askarel Tests
  - Water In Oil P.P.M.
  - Dissolved Gas In Oil

RONDAR INC.

333 Centennial Parkway North — Hamilton, Ontario
L8E 2X6 (416) 561-2808

Scarborough (416) 292-6932 Sarnia (519) 337-3224
Ottawa (613) 224-1533 Windsor (519) 972-0728

Safety House of Canada is a leading manufacture of safety appliances medical supplies and fire fighting equipment serving industry, government, institutions, construction and export to over 46 countries worldwide, such products as head, eye, ear protection, first aid kits and supplies, fire extinguishers etc

SANEXEN INTERNATIONAL
SANIVAN GROUP
THE LEADER IN ENVIRONMENTAL SOLUTIONS

Sanexen International
Selenco/Sanivan Group
3027 Harvester Rd
Burlington, Ont.
L7N 3G7
Tel: (416) 681-3366
Fax: (416) 681-1195
The Selenco/Sanivan Group offers mineral oil decontamination, askarel replacement, PCB transportation, carcus decontamination, soil and water decontamination and site remediation. The company is building a PCB destruction facility in Senneterre, Québec. The facility will start excepting waste material in the spring of 1988.

Senes Consultants Limited
499 McNicoll Ave.
Willowdale, Ont.
M2H 2C9
Tel:(416) 499-5030
Fax: (416) 499-5307
Senes offers expertise in occupational and environmental assessment aspects of the handling, use, transportation and disposal of hazardous contaminants; pathways analysis capabilities to determine the transfer of contaminants through air, water and biological systems; risk assessment of the decommissioning and decontamination projects.

Shepherd's Utility Equipment Sales
34 Florence Dr.
Petterlaw, Ont.
L0E 1N0
Tel: (705) 437-2526
Supply PCB test kits, oil absorbents and personal protective clothing and

MONS 225264

safety related equipment.

Sun Environmental Ltd.
3100 Steeles Ave E., Ste 603
Markham, Ont.
L3R 8T3
Tel. (416) 479-1433
Fax. (416) 479-1609
An environmental services company fully approved for operation in all provinces. The SUNOHIO PCBX process chemically destructs PCBs in bulk oil and oil filled transformers, either energized or de-energized. The SYSTEM 50 SM technology retrofills and reclassifies askarel transformers to a non-PCB satus. Sales representation throughout Canada and the United States.

The Thomas Environmental Group
5369 Maingate Dr.
Mississauga, Ont.
L4W 1G6
Telphone: (416) 624-1264
The Thomas Environmental Group offers a complete range of PCB services including: analysis and testing, on-site treatment, packaging, containment, transportation, and site management consultation. 24-Hour emergency response for PCB incidents.

Tiltran Services
25 Spruce St., Unit 2
Tillsonburg, Ont.
N4G 4W6
Tel: (519) 842-6458
Fax: (519) 842-2496
Electrical substation design, construction, commissioning and maintenance. Thermographic infrared inspections. Co-ordination and load studies, harmonic and power factor analysis, emergency repair or replacement of electrical switchgear or transformers

Varian Canada Inc.
332 Guelph St.
Georgetown, Ont.
L7G 4B5
Tel: (416) 873-1611
Fax: (416) 873-1213
Varian Canada is the leading supplier of gas chromatographs for PCB analysis in Canada. We supply the equipment and will train your staff to analyse used oils, water etc. for PCBs.

Westinghouse Canada Inc.
Services Division
5230 South Service Rd.
Burlington, Ont.
L7L 5H4
Tel: (416) 528-8811
Fax: (416) 632-1724
Westinghouse Canada offers the "single supplier solution" to your PCB problems. Operating from over 40 locations, our skilled PCB trained field service specialities develop and implement environmental cost effective turn key projects or handle small jobs for you. Our services include: Lab analysis, site and equipment risk analysis, equipment repair or replacement non-PCB in nature, site storage, disposal, transportation, chemical decontamination and the TransForm process for declassifying askarel transformers.

Other Locations:

55 Goldthorpe Ave.
Etobicoke, Ont.
M8Z 5S7
Tel: (416) 252-7361
Fax: (416) 255-5470

717 Woodward Ave.
Hamilton, Ont.
L8H 6P3
Tel: (416) 528-8811

6398 Justus Dr
Kingston, Ont.
K7M 4H5
Tel: (613) 389-8565
Fax. (613) 384-6282

20 Alpine Ct
Kitchener, Ont.
N2E 2M7
Tel: (519) 744-1161

45 Pacific Ct., Unit 3
London, Ont.
N5V 3N4
Tel. (519) 663-9792

500 Wentworth Rd E., Unit 10
Oshawa, Ont.
L1H 3V9
Tel: (416) 436-1558

2320 St. Laurent Blvd
Ottawa, Ont.
K1G 3S9
Tel: (613) 733-2503
Fax: (613) 733-9223

348 Queen St. S.
Sarnia, Ont.
N7T 2S2
Tel: (519) 337-3285
Fax: (519) 386-2499

475 Glendale Ave.
St. Catharines, Ont.
L2R 7K1
Tel: (416) 227-1020

428 Millen Rd.
Stoney Creek, Ont.
L8E 3N9
Tel: (416) 664-3300
Fax: (416) 664-3384

48 Pacific Ave.
Sudbury, Ont.
P3A 4S9
Tel (705) 674-3356
Fax: (705) 673-1845

Westinghouse Ave.
Swastika, Ont.
P0K 1T0
Tel: (705) 642-3252

635 Mountdale Ave S

MONS 225265

Thunder Bay, Ont
P7E 6E5
Tel. (807) 577-4267

4080 E C Row Ave. E., Unit #22
Windsor, Ont
N9A 6J3
Tel (519) 944-0121

Young Utility Equipment Ltd.
55 Nugget Dr., Unit 4
Agincourt, Ont
M1S 3L1
Tel (416) 291-7777
Fax. (416) 291-5750
Kits for the detection and screening of PCBs in dielectric oils and soil. The company also offers a system to analyse dissolved gases in transformer oils and detect incipient transformer faults before serious problems occur

ZENON Environmental Inc.
845 Harrington Ct.
Burlington, Ont.
L7N 3P3
Tel: (416) 639-6320
Fax: (416) 639-1812
ZENON Environmental Inc. provides detailed analysis and engineering waste treatment studies for PCBs. Current projects include a study to identify source of PCB-contamination on-site, including analysis of soils, sediments and water, treatment process evaluations and pilot scale testing programs. ZENON also has exclusive experience in the analysis of emissions from PCB destruction units and soil/groundwater investigations

Quebec

Cie Nationale de Forage & Sondage Inc.
Division of Lavalin
1325 Newton
Boucherville, Quebec
J4B 5H2
Tél: (514) 655-9510
Fax: (514) 876-9273
Characterization of site, sampling experts analysis of PCBs in water, soil, sludge, sediment air The company consults on the management of decontamination projects.

Inspec-Sol Inc.
4600 Cote Vertu, Suite 200
Montreal, Quebec
H4S 1C4
Tel (514) 333-5151
Fax: (514) 333-4874
Geotechnical engineering and soil sampling. Groundwater and hydrogeology studies

International Environmental Materials Inc.
9045 Cote de Liesse, Suite 103
Dorval, Quebec
H9P 2M9
Tel: (514) 631-8813
Chemical waste management specializing in PCB waste. Site service; transportation; disposal.

Monenco Consultants Limited
2045 Stanley Rd.
P O. Box 6088, Station A
Montreal, Quebec
H3C 3Z8
Tel: (514) 499-3300
Monenco Consultants offers technical consultation and complete engineering, procurement and construction (or construction management) services for hazardous chemical spill delineation, clean-up, treatment and site rehabilitation, waste treatment system design and upgrade. Also offer hazardous chemical spill contingency planning and occupational hygiene consulting services.

Morgan Shaffer Corporation
5110 Coutrai Avenue
Montreal, Quebec
H3W 1A7
Tel (514) 739-1967
Fax: (514) 739-0434
Morgan Shaffer offers analysis of PCBs in transformer insulating fluids, soil water and other materials

NOVALAB Ltée
9420 Cote de Liesse,
Lachine, Quebec
H8T 1A1
Tel (514) 636-6216
Fax: (514) 631-9814
NOVALAB provides analysis of PCB on various media including blood, soil, air, tissues, oil, waste and other solids.

Pluritec-Dillon Inc.
1801 McGill College
Suite 930
Montreal, Quebec
H3A 2N4
Tel: (514) 844-8980
Pluritec-Dillon consultants provide PCB hazard assessment, waste management and PCB waste disposal.

PPM Canada Inc.
28 Edison, Mart E
Place Bonaventure, C.P. 788
Montreal, Quebec
H5A 1E1
Tel: (514) 871-2215/6
Fax: (514) 866-0516
PPM Canada provides PCB anaylsis and destruction, transformer decontamination for reuse or disposal. Also, drums, tanks, rectifiers are decontaminated for reuse or disposal.

Sanexen International
7777 Louis-H. Lafontaine Blvd.,
Anjou, Quebec
H1K 4E4
Tel: (514) 355-3351.
The Selenco/Sanivan Group offers mineral oil decontamination, askarel replacement, PCB transportation, carcus decontamination, soil and water decontamination and site remediation. The company is building a PCB destruction facility in Sennetere, Québec. The facility will start excepting waste material in the spring of 1988.

Sani-Mobile Inc.
666 route Trans Canada
St. David (Levis), Quebec
G6W 6M7
Tel (418) 833-6840
Water treatment for contaminated

MONS 225266

PCBs. Site clean-up and restoration, sampling and analysis, custom made decontamination equipment, contaminated equipment securisation, decontamination of equipment, contaminated oil and equipment transportation.

Sani Mobile Montreal Inc.
2685 Francis Hughes
Laval, Quebec
H7A 3S8
Tel: (514) 382-9604
Water treatment for contaminated PCBs. Site clean-up and restoration, sampling and analysis, custom made decontamination equipment, contaminated equipment securisation, decontamination of equipment, contaminated oil and equipment transportation.

Sodexen Inc.
2670 Industrial Blvd.
Chomedy, Laval, Quebec
H7L 3S2
Tel: (514) 381-8684
Fax: (514) 381-4909
Environmental services company in all fields of industrial environmental compliance. Sampling, lab analysis, hazardous waste management, site charactenzation and remediation, industrial hygiene PCB services offered. Serving eastern Canada.

Syprotec Inc.
68 Hymus Blvd
Pointe-Claire, Quebec
H9R 1E4
Tel: (514) 694-3637
Fax: (514) 694-9245
Kwik-Screen Analytical Testing System (KSATS) for PCBs in soil and dielectric oils. Major utilities have proven the KSATS is simple, fast and economical. When testing soil it is useful for rapidly mapping spill sites, identifying PCB spills, and confirming PCB spill clean-up. When testing oil samples it may be accurately used in the lab or taken into the field for on-the-spot testing.



Technitrol/Eco Research (Canada) Ltee.
121 Hymus Blvd
Pointe Claire, Quebec
H9R 1E6
Tel: (514) 697-3723
Fax: (514) 697-2090
Technitrol provides analysis of PCBs in any matrix including oil, water, soil, paper, clothing, living organisms, blood, urine, etc. Sampling services are also offered.

Westinghouse Canada Inc.
Services Division
180 rue Authier
St. Laurent, Quebec
H4M 2C9
Tel: (514) 748-8811
Fax: (514) 744-6582
Westinghouse offers the "single supplier solution" to your PCB problems. Operating from over 40 locations, our skilled PCB trained field service specialities develop and implement environmental cost effective turn key projects or handle small jobs for you. Our services include: Lab analysis, site and equipment risk analysis, equipment repair or replacement non-PCB in nature, site storage, disposal, transportation, chemical decontamination and the TransForm process for declassifying askarel transformers.

Other Locations:

11 rue Maisonneuve
Baie Comeau, Quebec
G4Z 1C6
Tel: (418) 296-8253

1084 Manic St.
Chicoutimi, Quebec
G7K 1A2
Tel: (418) 549-6968
Fax: (418) 549-7048

2385 rue Watt
Ste. Foy, Quebec
G1P 3X2
Tel: (418) 656-1026
Fax: (418) 565-1025

790 Place Boland
Trois Rivieres, Quebec
G8Z 4H2
Tel: (819) 371-1880

MONS 225267

1224 Bergar St
Chomedey, Quebec
H7L 9Z7
Tel (514) 629-3625

Atlantic Canada

Westinghouse Canada Inc.
Services Division
80 Enterprise St.
Moncton, N.B
E1C 8T4
Tel: (506) 382-4457
Fax: (506) 858-9483
Westinghouse offers the "single supplier solution" to your PCB problems. Operating from over 40 locations, our skilled PCB trained field service specialities develop and implement environmental cost effective turn key projects or handle small jobs for you. Our services include: Lab analysis, site and equipment risk analysis, equipment repair or replacement non-PCB in nature, site storage, disposal, transportation, chemical decontamination and the TransForm process for declassifying askarel transformers.

Other Locations:
137 Water St.
Campbellton, N. B.
E3N 1B4
Tel: (506) 753-5041
Fax: (506) 753-2548

70 Crown St.
Saint John, N. B.
E2L 3Y2
Tel: (506) 642-7706
Fax: (506) 658-0618

Canchem Incorporated
800 Windmill Rd. Ste. 10
Dartmouth, N. S.
B3B 1L1
Tel: (902) 835-9591
Maintenance service: spill clean-up; special containers; transportation; consultation and testing.

Kemic Bioresearch
Laboratories Ltd.
70 Exhibition St., P O Box 878
Valley Professional Centre
Kentville, N S
B4N 4H8
Tel (902) 678-8195
Fax (902) 678-6876
Bio-medical research, testing and consultancy Special expertise in environmental and occupational toxicology including analytical monitoring. Also organize instructional courses regarding toxicology and related fields

Marine and Environmental Services
Shed 27, Pier 28,
Ocean Terminal Rd.
Halifax, N.S.
B3J 2M4
Tel: (902) 423-2446
Atlantic based company specializing in hazardous spill control and clean-up of chemical and oil spills and emergency response services affecting the environment.

Monenco Maritimes Ltd.
Suite 500, Barrington Tower
Scotia Square
Halifax, N.S.
B3J 2A8
Tel: (902) 429-8110
Technical consultation and complete engineering, procurement and construction (or construction management) services for hazardous chemical spill delineation, clean-up, treatment and site rehabilitation, waste treatment system design and upgrade. Also, hazardous chemical spill contingency planning and occupational hygiene consulting services.

Ocean Chem Group
32 - 1000 Windmill Rd.
Dartmouth, N S.
B3B 1L7
Tel: (902) 463-0114
Fax: (902) 466-5743
Ocean Chem Group provides laboratory analysis of hydraulic oils for PCB content, laboratory analysis of soils and waters for residual PCBs: also, specialized soil, water and air sampling and general environmental consulting.

Porter-Dillon Inc.
Ste. 202, 2651 Dutch Village Rd.
Halifax, N. S
B3L 4G5
Tel. (902) 453-1115
Porter-Dillon consultants provide PCB hazard assessment, waste management and PCB waste disposal.

Westinghouse Canada Inc.
Services Division
Sydport Industrial Park
Sydney, N.S.
B1P 6R7
Tel: (902) 562-2242
Fax: (902) 562-7665
Westinghouse offers the "single supplier solution" to your PCB problems. Operating from over 40 locations, our skilled PCB trained field service specialities develop and implement environmental cost effective turn key projects or handle small jobs for you. Our services include: Lab analysis, site and equipment risk analysis, equipment repair or replacement non-PCB in nature, site storage, disposal, transportation, chemical decontamination and the TransForm process for declassifying askarel transformers

Golder Associates
716 Water St.
St. John's, Nfld.
A1E 1C1
Tel: (709) 579-2165
Golder Associates provides a complete range of geotechnical and hydrogeological consulting services throughout Canada and the U.S. related to the assessment of soil and groundwater contamination due to PCBs, sampling and monitoring, spill investigations, site remediation and engineered waste containment.

Shawmont Newfoundland Limited
Ballyrou Place, 280 Torbay Rd .
P.O. Box 9600
St. John's, Nfld.
A1A 3C1
Tel: (709) 754-0250
Technical consultation and complete engineering, procurement and construction (or construction management) services for hazardous chemical spill delineation, clean-up, treatment and site rehabilitation waste treatment system design and upgrade. Also, hazardous chemical spill

MONS 225268

contingency planning and occupational hygiene consulting services.

Westinghouse Canada Inc.
Services Division
89 O' Leary Ave.
St. John's, Nfld.
A1B 2C9
Tel: (709) 722-7282
Fax: (709) 722-1053
Westinghouse offers the "single supplier solution" to your PCB problems. Operating from over 40 locations, our skilled PCB trained field service specialities develop and implement environmental cost effective turn key projects or handle small jobs for you. Our services include Lab analysis, site and equipment risk analysis, equipment repair or replacement non-PCB in nature, site storage, disposal, transportation, chemical decontamination and the TransForm process for declassifying askarel transformers.

MONS 225269

Government Services Directory

British Columbia

Federal Regional Office
(Pacific and Yukon Region)
Steve Doss
Environmental Protection Service
3rd Floor
Kapilano 100
Park Royal
West Vancouver, B. C.
V7T 1A2
Tel: (604) 666-6711
Emergency Tel: (604) 666-8100

Provincial Government
Lanny Hubbard
Ministry of Environment and Parks
Waste Management Branch
810 Blanshard St.
Victoria, B. C.
V8V 1X5
Tel: (604) 387-9953

PCB Emergencies
Provincial Emergency Program
3287 Oak St.
Victoria, B.C.
V8X 1P1
Tel: Zenith 2667, or
(604) 387-5956

Alberta

Federal Government
Ray Nickson
Environmental Protection Service
Twin Atrai
#2, Second Floor
4999 - 98th Ave.
Edmonton, Alta.
T6B 2X3
Tel: (403) 468-8041
Emergency Tel. (403) 468-8020

Provincial Government
Al Leander
Waste Management Branch
Alberta Environment
4th Floor,
9820 106th Street,
Edmonton, Alta.
T5K 2J6
(403) 427-5868

PCB Emergencies
Pollution Emergency Reponse Team
(PERT)
Tel: 1-800-222-6514

Saskatchewan

Federal Government
Hal Sommerstad
Environmental Protection Service
241 - 1901 Victoria Ave.
Regina, Sask.
S4P 3R4
Tel: (306) 780-6404
Emergency Tel: (403) 468-8020

Provincial Government
Larry Lecnar
Spills Control Centre
Engineering and Public Safety Branch
3085 Albert St.
Regina, Sask.
S4S 0B1
Tel: (306) 787-6195

PCB Emergencies
Spills Control Centre
24 hour emergency
Tel: 1-800-667-7525

Manitoba

Federal Government
Suzanne Richards
Environmental Protection Service
800 Kensington Building
275 Portage Ave.
Winnipeg, Man.
R3B 2B3
Emergency phone (403) 468-8020
Office (204) 983-2961

Provincial Government
Mike Stefanson
Director of Communications
Room 906
330 St. Mary Ave.
Winnipeg, Man.
R3B 3Z5
Telephone: (204) 945-4742

PCB Emergencies
Emergency Response
139 Tuxedo Ave.
Winnipeg, Man.
R3N 0H6
1-800-944-4888

Ontario

Federal Government
(Regional Office)
Regional Office
Dave McBain
Environmental Protection Service
7 th Floor
25 St. Clair St. E.
Toronto, Ont.
M4T 1M2
Tel. (416) 966-5840

MONS 225270

PCB Emergencies
Spills Action Centre
5th Floor
7 Overlea Blvd.
Toronto, Ontario.
M4H 1A8
Local Calls (24 hrs): (416) 965-9619
Out-Of-Town (24 hrs). 1-800-268-6060

Quebec

Federal Government
Bruno Lafortune
Environmental Protection Service
1179 Bluery St.
Montreal, Quebec
H3B 3H9

Provincial Government
Direction des Substances Dangereuses
3900 Rue Marly
Ste-Foy (Québec City), Québec
G1X 4E4
Telphone (418)

Atlantic Canada

Nova Scotia

Federal Government
Sandy Matheson
Environmental Protection Service
5th Floor, Queen's Square
45 Alderney Dr.
Dartmouth, N.S.
B2Y 2N6
Emergency phone Zenith 49000
Office (902) 426-6141

New Brunswick

Federal Government
David Silliphant
Enviromental Protection Branch
Department of Municipal Affairs and Environment
P O Box 6000
Fredricton, New Brunswick
Telephone (506) 452-3286

Prince Edward Island

Federal Government
Arthur J Hiscock
Environmental Protection Service
P O. Box 426
Charlottetown, P.E.I.
C1A 7K7
Emergency phone Zenith 49000
Office (902) 566-7042

Newfoundland

Federal Government
John Neate
Environmental Protection Service
P O Box 5037, N W Atlantic Fisheries Centre
St. John's, Newfoundland
A1C 5V3
Emergency phone (709) 737-2063
Office (709) 772-5488

MONS 225271