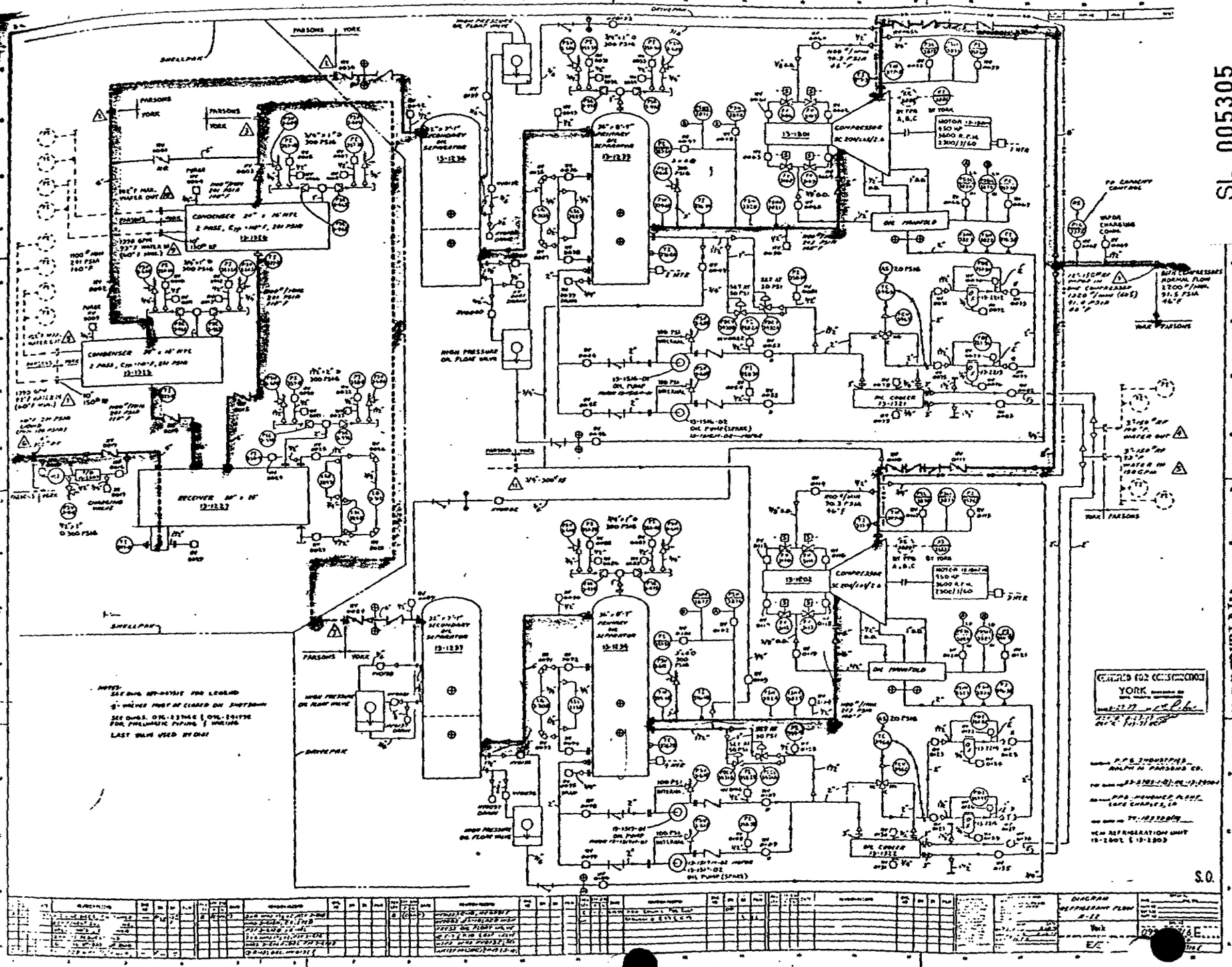

SL 005305

CONFIDENTIAL:
Subject to Protective Order
of 14th Judicial District Court