A-C FULL VOLTAGE – MAGNETIC

3 Phase Non-Reversing Starters

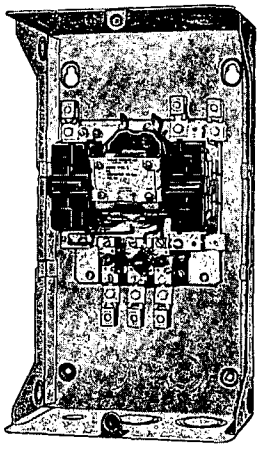

Size 4, NEMA 1

TYPICAL WIRING DIAGRAMS

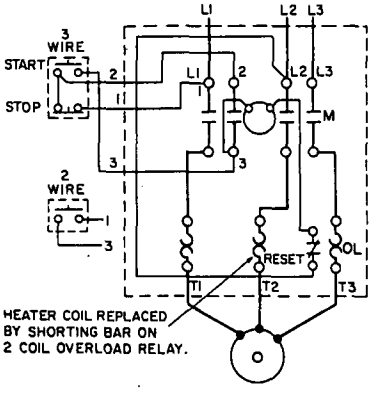

Starter with Overload Relay Reset Button Only

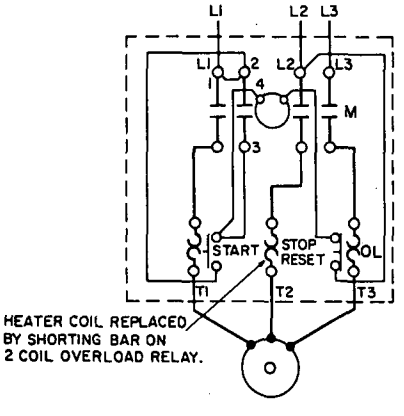

Starter with Local Start, Stop Pushbuttons

APPROXIMATE DIMENSIONS AND SHIPPING WEIGHTS

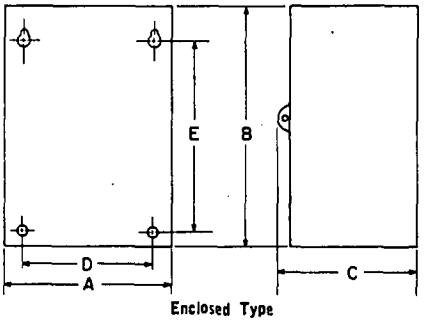

Enclosed Type

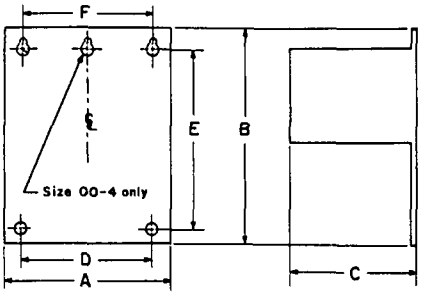

Open Type

NEMA 1 — Enclosed Type

NEMA Size	Dimensions in Inches: Wide A	High B	Deep C	Mounting D	Mounting E	Ship. Wt. Lbs.
00	5⅜	7	4⅞	3½	5½	7
0	5⅜	8⅜	5	3½	6¾	7½
1	6⅜	9½	5⅜	4⅜	7⅜	9½
2	8¾	13¾	7½	6¼	11⅛	24
3	11¼	18⅛	8⅝	8	14½	39
4	13	23¼	8⅝	10	18½	49
5	17	37¾	11½	14¾	36¼	75
6	28	60	28½	Floor Mtd.		---
7 & 8	48	72	40¼	Floor Mtd.		---

OPEN TYPE

NEMA Size	Type	Dimensions in Inches: Wide A	High B	Deep C	Mounting D	Mounting E	Mounting F	Ship. Wt. Lbs.
00	All	4⅛	5½	4⅛	2½	5	---	3¼
0	All	4¾	6⅛	4⅛	2¾	5½	---	3¾
1	All	5¾	6¾	4⅞	4	5¾	---	5
2	All	7¼	9	5⅝	5½	7⅞	---	12
3	All	9	10¾	7½	7	9⅛	---	19
4	440 V. Max.	10	13⅛	5⅝	7	9	---	26
	550 V. Max.	10	13⅛	7	7	9	---	26
5	440 V. Max.	13	15¼	6⅛	12	11	4½	50
	550 V. Max.	13	15¼	7½	12	11	4½	50
6	---	---	---	---	---	---	---	---
7 & 8	---	---	---	---	---	---	---	---

NEMA 3

NEMA Size	Dimensions in Inches: Wide A	High B	Deep C	Mounting D	Mounting E	Ship. Wt. Lbs.
0	9⅛	10⅝	6⅞	5	8¼	16
1	9⅛	10⅝	6⅞	5	8¼	18
2	10⅝	14⅛	6⅞	5	11¾	32
3	13¼	19⅛	8½	6	16¾	52
4	14¼	24	10⅝	7	21⅝	65
5	18¼	34	10⅝	10	31⅝	87

NEMA 4

Dimensions in Inches: Wide A	High B	Deep C	Mounting D	Mounting E	Ship. Wt. Lbs.
8	11¾	8⅞	4¾	10¾	23
8	11¾	8⅞	4¾	10¾	25
10¾	16¾	9⅛	7½	15¾	33
13	21¾	9½	9¾	20¾	55
13	24¾	9½	9¾	23¾	68
17	37¾	10⅜	14¾	36¼	90

NEMA 5-12

NEMA Size	Dimensions in Inches: Wide A	High B	Deep C	Mounting D	Mounting E	Ship. Wt. Lbs.
0	8	11¾	7	4¾	10¾	22
1	8	11¾	7	4¾	10¾	24
2	10¾	16⅜	9¼	7⅜	15½	33
3	13	21¼	9⅝	9⅜	20	55
4	13	24⅜	9¾	9⅜	23¾	68
5	17	37¾	11½	14¾	36¼	90

NEMA 7-D & 9-EFG

NEMA Type	Dimensions in Inches: Wide A	High B	Deep C	Mounting D	Mounting E	Ship. Wt. Lbs.
7	9¾	11½	7⅝	8	9¾	20
9	7⅛	10	7	5¼	9¼	14
7	9¾	11½	7⅝	8	9¾	22½
9	8½	10⅞	7¼	6⅜	10	17¼
7 & 9	12½	15⅝	8⅜	10¼	13⅜	43
7 & 9	14⅝	21⅜	9¾	12¾	19⅜	70
7 & 9	16⅛	24⅝	9⅛	14	23¼	95
7 & 9	23	28½	25½	8	17	280

NEMA 1 WITH CONTROL TRANSFORMER

NEMA Size	Dimensions in Inches: Wide A	High B	Deep C	Mounting D	Mounting E	Ship Wt. Lbs.
0	7⅛	16¼	6⅞	4¾	14	17¼
1	7⅛	16¼	6⅞	4¾	14	19
2	9⅛	21⅜	9⅛	6¼	18¾	39½
3	12¼	26¼	8⅞	9	22½	65

NEMA 1 WITH FAST TRIP OVERLOAD RELAY

Dimensions in Inches: Wide A	High B	Deep C	Mounting D	Mounting E	Ship. Wt. Lbs.
5⅜	8⅝	5	3½	6¾	7½
6⅝	9½	5⅝	4⅝	7⅜	9½
8¾	13¾	7½	6¼	11⅛	24
11¼	18⅛	8⅝	8	14½	39