DIRECTIONS FOR APPLYING GLATEX Contempora

THE ARISTOCRAT OF MODERN EXTERIORS

SIDING SHINGLES

PLAINTIFF'S EXHIBIT

USG-1462

PLEASE OBSERVE THESE PRECAUTIONS: *Store the shingles in a perfectly dry place, preferably in a building. If impossible to store inside, pile bundles of shingles flat on planks at least 4" from the ground, and protect them carefully with a waterproof covering. Moisture getting between the shingles in bundles may cause discoloration.*

Never apply over wet, frosty, or ice covered walls, or in wet weather.

It is recommended when leaving a job at night that the top unfinished course be temporarily flashed with asphalt roofing paper to prevent rain running down behind the shingles before the job is finished.

The special face nails furnished with the shingles should be used for all exposed nailing.

These shingles are for application on vertical side walls only, and must not be used on roof surfaces.

ATTENTION These shingles may develop a temporary condition known as efflorescence or "bloom" when exposed to such moisture elements as dew, frost or fog. This is merely a surface film and ordinary rains will rinse it off. In area not exposed to the rain, such as those under porches, wide eaves, etc., rinsing with ordinary water will remove it. It rarely occurs again after a single washing.

PREPARATION OF WALLS The wall surfaces to be covered should be made as smooth and even as possible. All warped and irregular boards must be firmly nailed in place. If old shingles or clapboards have thick butts and large exposure, it is necessary to apply bevel wood nailing strips running horizontally, or lath of sufficient thickness to bring the surface out in line with the vertical of the wall. These nailing strips should be on 8 3/8" centers.

When applying GLATEX Shingles over old brick or stone walls, horizontal nailing strips should be similarly spaced.

When applying over GLATEX, the best practice is to remove the old stucco, nailing the shingles to the wood sheathing. Where the stucco is in good condition, however, wood nailing strips may be used as for brick walls.

To assist in preventing air infiltration and to provide a suitable even surface upon which to nail the shingles, the walls should preferably be covered with a layer of USG Asphalt Felt or similar breather type material before applying the shingles. The use of a vapor barrier as an underlayment is not recommended, as this might permit condensation to occur within the wall. CAUTION: GLATEX should never be applied on metallic surfaces or underlayments such as aluminum foil, either perforated or unperforated, which might cause condensation to occur against the back of the siding. When such a product is used, we cannot assume responsibility for unsatisfactory performance of the siding.

MOULDING Whenever the use of GLATEX Siding shingles over old siding brings the wall surface out beyond the old door and window frames, new wood moulding should be installed to cover the exposed edges of the siding shingles. Adequate flashing should be used over all window and door openings, and a suitable water table or drip edge provided along the base and under all openings. See detail No. 1 .

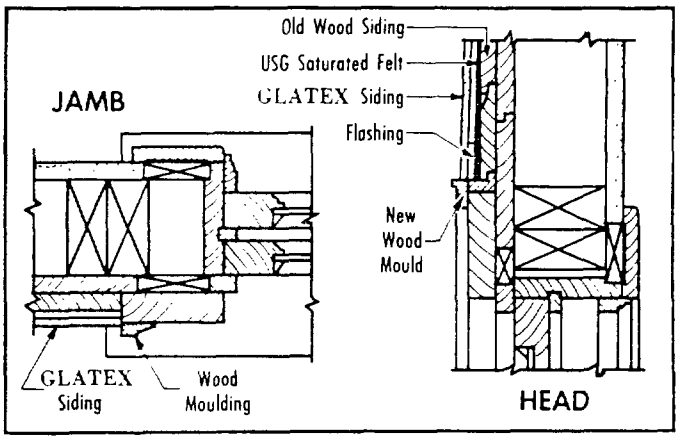

Detail No. 1 FINISHING AROUND WINDOWS

OUTSIDE AND INSIDE CORNERS Any one of several methods of finishing corners may be used. Shingles may be butted against existing corner boards, or new corner boards installed. Bull nose corner bead or individual metal corners are sometimes used. Individual metal corners matching various colors in our shingle line are obtainable. Some outside corners are formed by weaving or "lacing" alternate courses of shingles, lining up the side edges of corner shingles at each course with the faces of the two walls alternately, so a single line will not be formed. When this is done, edges should be brought down to a close fit with a rasp. See detail No. 3.

Both inside and outside corners should be flashed with heavy asphalt felt or metal flashing strips to provide a true corner and additional weather protection. See details No. 2 and No. 3 .

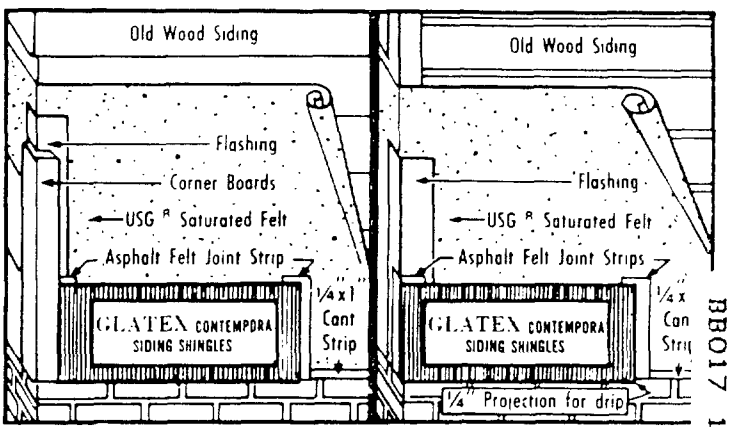

Detail No. 2 APPLICATION OF FIRST COURSE

CAULKING All door and window frames should be adequately caulked with caulking cement applied with a pressure gun.

BB017 1272

*T. M. REG. U. S. PAT. OFF.

CUTTING AND PUNCHING GLATEX Siding Shingles are always furnished die cut, with clean, sharp edges. Where it is necessary to cut shingles on the job, both for the sake of a finished job, and because it is quicker, it is recommended that an asbestos shingle cutter be used. It is in fact almost indispensable. Such shingle cutters with a 27½" or 32" blade are regularly provided with a punch for punching holes for concealed nails, and a notching device for cutting irregular shapes to fit around window sills. These cutters can be easily obtained from our dealers.

Where shingle cutters are not available, shingles may be scored with a sharp instrument, and snapped over a straight edge.

FIRST COURSE Apply ¼" x 1" cant strip or wood furring strip along the bottom of the wall. Snap a level chalk line 9⅛" above the bottom of this cant strip. Shingles in the first course should be laid with the top edge along this chalk line, thus insuring a straight level base line, and permitting the shingle to overhang the cant strip ¼", forming a proper drip edge. Apply a joint strip folded vertically at the corner. See detail No. 2. Start the application of the first course with a full size shingle, extending the butt ¼" below the cant strip to form a drip edge. *Secure the shingle by nailing the first colored face nail at the bottom of the shingle.* Then insert a joint strip beneath the shingle so that the strip centers under the vertical joint of this shingle and the shingle to be applied adjacent to it. Bring the top edge of the shingle to the chalk line and drive in the second colored face nail. Continue application of subsequent shingles in a similar manner placing an asphalt joint strip under each joint.

Butts of shingles are to be secured with special face nails, driven through the holes provided. Be sure that each face nail at the end of a shingle engages a joint strip.

It is important in nailing that you nail across the shingle—never nail both ends and then the center.

SECOND AND SUCCEEDING COURSES Apply a folded joint strip at the corner as in the first course, providing a ¾" lap of the strip over the first course shingles. See detail No. 3. Cut a full size shingle in half to provide for staggered joint application. Always use two holes in the butt of any piece of shingle, punching new holes if necessary. ***Note:*** Shingles can be aligned for proper exposure by inserting two colored face nails in the holes at the butt of the shingle allowing the inserted nails to rest upon the top of the underlying shingle.

Face nails are then driven as before being careful to insert a joint strip at each vertical joint as before described with the end coming ¾ inch down over the lower course. Continue application with full size shingles, being careful to make tight joints.

Complete succeeding courses as described, *breaking vertical joints at half shingles in alternating courses.*

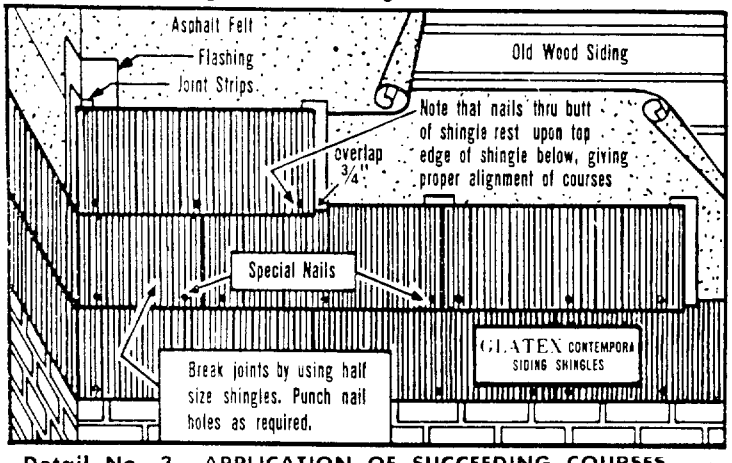

Detail No. 3 APPLICATION OF SUCCEEDING COURSES

OVER GYPSUM OR INSULATING SHEATHING Various types of attachment systems are available for the application of siding over these sheathings. GLATEX may be obtained without face nail holes for use with such attachment systems.

OVER HIGH DENSITY INSULATING SHEATHING A special 1⅜-inch aluminum annular ring nail should be used to apply GLATEX to this sheathing. This nail should be 0.160-inch in diameter with a smooth needle point.

OVER PLYWOOD SHEATHING When applying GLATEX siding over plywood sheathing, the use of a 1¼-inch long, 0.114 inch diameter shank screw thread aluminum nail is recommended.

UNITED STATES GYPSUM

The Greatest Name in Building

Gypsum • Lime • Steel • Insulation • Roofing • Paint

BB017 1280

ACR-98 Rev., 10 60. Printed in U.S.A.

*T.M. REG. U.S. PAT. OFF