FOAMGLAS® APPLICATION SPECIFICATIONS

...for DUAL TEMPERATURE Equipment and Piping

(Sub-zero to 400°F)

This specification covers the application of FOAMGLAS insulation for use on equipment and piping normally operating at temperatures below 70°F, and subjected to cycle operation and thereout service up to 400°F. It is applicable to either indoor or outdoor service.

26105-I



201058

General Office:

Field Offices:

PITTSBURGH pc CORNING

Litho in U. S. A.

FI-1042 Rev. 5M-1/66

PITTSBURGH pc CORNING

PLAINTIFF'S
EXHIBIT
U-703

Table I

MINIMUM SUGGESTED THICKNESSES FOR SPECIFIED TEMPERATURES

figures in table are degrees Fahrenheit and are minimum temperatures for use with thickness and design conditions stated. When design temperature falls between two thickness columns, use the greater thickness. Table is based on thickness required to prevent condensation on surfaces with .9 emissivity, in 90° F still air at 80% relative humidity. Heat gain average 8-9 Btu/ft²/Hr. insulation surface. Where other design conditions are used, thicknesses should be adapted to meet job requirements.

Pipe Size	450	400	350	300	250	200	150	100	50	0	-50	-100	-150	-200	-250	-300	-350	-400	-450	-500
½"	45	10	-25	-45	-95	-160	-275	-305	-335	-350	-450									
¾"	50	25	-10	-25	-70	-135	-225	-255	-300	-360	-415	-450								
1"	50	25	-10	-25	-70	-120	-180	-255	-300	-360	-425	-450								
1¼"	50	30	5	-15	-60	-105	-145	-200	-265	-315	-375	-425	-450							
1½"	50	30	15	-15	-45	-100	-120	-165	-230	-280	-345	-390	-440	-450						
2"	50	30	15	-15	-45	-90	-120	-175	-225	-290	-340	-385	-430	-450						
2½"	50	30	15	-10	-35	-60	-105	-130	-175	-225	-290	-330	-375	-425	-450					
3"	50	30	15	-10	-35	-60	-105	-125	-175	-225	-290	-330	-370	-415	-450					
3½"	50	30	15	-10	-35	-60	-105	-135	-175	-225	-290	-330	-355	-410	-450					
4"	50	30	20	0	-30	-55	-85	-135	-160	-205	-255	-300	-360	-375	-420	-450				
4½"	50	30	20	0	-30	-55	-85	-135	-160	-205	-255	-300	-340	-380	-420	-450				
5"	50	45	25	0	-25	-45	-80	-110	-140	-175	-220	-270	-305	-345	-380	-415	-450			
6"	50	45	25	0	-25	-45	-70	-105	-125	-155	-195	-240	-280	-325	-360	-395	-430	-450		
7"		45	25	0	-25	-40	-65	-85	-120	-150	-185	-220	-275	-300	-340	-375	-410	-450		
8"		45	25	0	-15	-35	-60	-85	-105	-145	-175	-215	-255	-295	-325	-380	-395	-425	-450	
9"		45	25	5	-10	-35	-55	-80	-105	-135	-170	-200	-240	-265	-315	-345	-380	-415	-445	-450
10"		45	30	10	-10	-25	-50	-70	-105	-125	-150	-185	-225	-255	-300	-330	-360	-410	-430	-440	-450
11"		45	30	10	-5	-25	-45	-70	-105	-130	-145	-175	-210	-255	-290	-320	-350	-380	-410	-435	-450
12"		45	30	15	-5	-25	-40	-65	-95	-115	-140	-170	-205	-245	-285	-325	-340	-370	-400	-425	-450
14"		45	30	15	0	-25	-40	-55	-80	-105	-130	-160	-190	-225	-265	-295	-325	-355	-380	-410	-430	-450
16"		45	30	20	0	-25	-35	-55	-75	-105	-125	-150	-180	-210	-250	-285	-310	-340	-365	-395	-425	-450
18"		45	30	20	0	-25	-35	-50	-70	-105	-115	-145	-175	-200	-235	-275	-295	-325	-355	-380	-410	-435	-450
20"		50	30	20	0	-25	-35	-45	-65	-85	-110	-135	-155	-190	-225	-260	-290	-315	-345	-370	-395	-425	-450
24"		50	30	20	0	-25	-35	-45	-55	-85	-105	-130	-155	-180	-205	-240	-270	-300	-330	-355	-380	-405	-430
28"		50	30	20	5	-10	-25	-45	-60	-80	-105	-125	-145	-170	-200	-235	-260	-295	-315	-340	-365	-390	-415
32"		50	30	20	5	-10	-25	-40	-60	-75	-105	-120	-140	-170	-190	-225	-250	-285	-305	-330	-350	-375	-400
36"		50	30	20	10	-5	-25	-40	-55	-75	-105	-115	-135	-160	-185	-215	-240	-280	-300	-320	-345	-365	-390
Over C.D.																				
42"		50	30	25	10	-5	-20	-35	-55	-70	-95	-110	-130	-155	-175	-195	-220	-260	-280	-310	-330	-355	-375
48"		50	30	25	10	-5	-20	-35	-50	-70	-90	-105	-125	-145	-170	-190	-225	-245	-280	-305	-325	-345	-365
54"		50	35	25	10	-5	-20	-35	-50	-65	-85	-105	-125	-145	-165	-190	-225	-240	-270	-295	-315	-340	-360
60"		50	40	25	10	-5	-20	-30	-50	-65	-85	-105	-125	-145	-165	-185	-210	-230	-260	-290	-310	-330	-350
66"		50	40	25	10	-5	-15	-30	-50	-65	-80	-105	-120	-140	-160	-180	-205	-230	-260	-285	-305	-325	-345
72"		50	40	25	10	0	-15	-30	-50	-65	-80	-105	-115	-135	-155	-180	-200	-230	-255	-285	-300	-320	-340
78"		50	40	25	10	0	-15	-30	-45	-65	-80	-105	-115	-135	-155	-175	-200	-225	-250	-280	-300	-315	-340
96"		50	40	25	10	0	-15	-30	-45	-65	-80	-105	-115	-130	-150	-170	-195	-220	-240	-270	-290	-310	-330
108"		50	40	25	10	0	-15	-30	-45	-60	-75	-105	-110	-130	-150	-170	-190	-215	-240	-265	-290	-305	-325
120"		50	40	25	10	0	-15	-30	-45	-60	-75	-105	-110	-130	-145	-170	-190	-210	-230	-260	-280	-300	-320
144"		50	40	25	10	0	-15	-30	-45	-60	-75	-95	-110	-125	-145	-165	-185	-205	-230	-255	-280	-300	-305
Over 144" to Flat		50	40	25	15	0	-10	-25	-40	-55	-65	-80	-105	-115	-135	-145	-165	-180	-200	-220	-240	-265	-280

Copyright 1959, Pittsburgh Corning Corporation

Prior to the application of any insulation, all metal surfaces shall be thoroughly cleaned of grease, dirt, rust and scale. At the option of the designer, the metal shall then be primed with either a rust inhibiting paint or PC Primer Sealer 3A depending upon the temperature involved.

I. EQUIPMENT

A. Thickness

Equipment shall be insulated with thickness of FOAMGLAS insulation as shown in Table I. Insulation thickness shall be determined by lowest temperature at which the equipment normally operates.

B. Insulation Supports

1. Vertical Equipment.

   a. Angle or plate supports shall be welded around the shell at top and bottom.

   b. On equipment requiring multiple-layer insulation, horizontal leg of support shall be of such length as to support 1/2 the thickness of the outer layer of insulation. Horizontal leg of insulation supports for single layer application shall be of such length as to support 1/2 the thickness of the insulation.

C. Application

1. FOAMGLAS insulation shall be curved sidewall segments or beveled lags fabricated to fit the diameter of the equipment to which it is applied. Insulation shall be applied in staggered position with all joints tightly butted and secured with specified strap in sufficient tension to hold insulation in place.

   a. Additional layer or layers of FOAMGLAS insulation, where specified, shall be applied in the same manner as the first layer, with side and end joints staggered over joints of preceding layer, so that no two joints coincide.

   b. All butt edges and ends of outermost layer (or single layer) shall be sealed with a buttered coat of joint sealer. Service temperature limits of sealer shall be within range of cycling temperatures to which it is exposed.

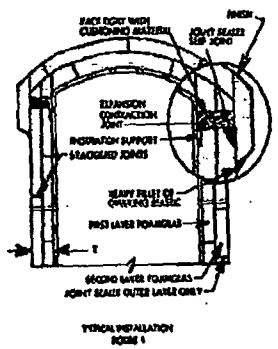

TYPICAL INSTALLATION
FIGURE 1

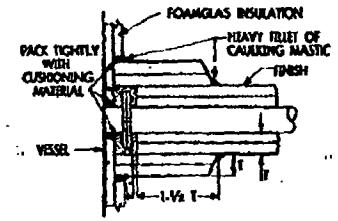

FOAMGLAS INSULATION OF VESSEL NOZZLE
FIGURE 2

c. FOAMGLAS insulation shall be applied with all joints fitted to eliminate voids. Voids shall not be filled with vapor seal coating, but eliminated by refitting or replacing insulation.

d. An additional layer of FOAMGLAS insulation shall be applied over the outside layer where insulation supports are located.

e. Typical installation shown in Figure 1.

2. Each layer of FOAMGLAS insulation shall be secured in place with stainless steel strapping, where contour of equipment permits firm and effective attachment. Strapping shall be spaced on 9" centers where 18" length insulation is used, and on 12" centers where 24" length insulation is used.

a. On irregular surfaces, where use of insulation strap is impractical, FOAMGLAS insulation shall be secured with stainless steel wire.

b. Head insulation, as well as insulation around manholes and other connections, may be fastened in place using a floating ring of steel rod or stranded cable. One end of the band is fastened to the floating ring and the other is anchored to an extra band or bands placed around the sidewall insulation. Bands shall be spaced on 12 inch centers around the perimeter of the extra band or bands.

3. Expansion-contraction joints shall be provided below insulation support as shown in Figure 1.

4. One inch of cushioning blanket shall be packed around nozzles, vessel flanges, and other projections where they extend through the insulation as shown in Figure 2.

5. Where equipment is supported on metal cradles, FOAMGLAS insulation shall be carried down over cradles and shall be installed as shown in Figure 3.

6. Where equipment is supported by structural steel members, FOAMGLAS insulation shall be extended not less than four times the specified insulation thickness in each direction, measured from junction of equipment with insulated support lug. Thickness of insulation over steel supports shall be one-half that specified for body of equipment. Thickness of insulation over support lugs to be the same as body insulation. Installation shall be as shown in Figure 4.

7. Equipment legs shall be insulated with FOAMGLAS block as part of equipment area. FOAMGLAS insulation to extend over structural legs and down legs a distance of four times insulation thickness. Thickness shall be as specified for body of equipment. Body insulation shall be brought up to and butted firmly against tank leg flange. Spaces between flanges and webs of structural members shall be filled with FOAMGLAS block. Installation shall be as shown in Figure 5.

8. Skirts supporting vertical equipment shall be insulated inside and outside as part of equipment area, FOAMGLAS to extend downward from junction of inside of skirt with insulated bottom head a distance of not less than four times the thickness of insulation, but in no case less than one foot. Thickness shall be as specified for body of equipment. FOAMGLAS insulation shall be secured to inside of skirt with an approved adhesive. FOAMGLAS insulation inside skirt shall be supported on angle or plate support. Blank nuts on 12 inch centers shall be provided on inside of skirt for securement of bottom head insulation. Installation shall be as shown in Figure 6.

9. Where equipment is subject to excessive vibration, the insulation shall be coated with a thin application (to fill surface cells only) of specified anti-abrasive coating, and allowed to dry before application of the insulation. On single layer applications, coat surface of insulation in contact with equipment. On multi-layer applications, coat all surfaces except outer surface of last layer and joint surfaces to be sealed.

D. Finish

A variety of materials may be used for finishing FOAMGLAS insulation to meet specific design conditions. Typical finishes include:

1. Glass fabric reinforced mastic.

After specified thickness of equipment insulation has been installed, a tack coat of an approved coating (Pittcote 300, or 400) shall be sprayed, brushed or troweled on to the insulation at 2 gallons per 100 sq. ft. While the coat is still tacky, an open weave glass membrane (10" x 10" or 10" x 20" mesh, asphalt impregnated for Pittcote 300, non-asphaltic for Pittcote 400) shall be laid smooth and thoroughly embedded in the coating. Care must be exercised that the weave does not rupture and that the cloth is overlapped approximately three inches to provide strength at joint equal to that maintained elsewhere.

Before surface becomes dry to the touch, a second coating shall be sprayed, brushed or troweled over the reinforcing cloth. Coverage shall be 6 gallons per 100 sq. ft. for Pittcote 300, and 4 gallons per 100 sq. ft. for Pittcote 400. The glass fabric shall be completely covered with mastic with no portion visible.

Painting.

When asphaltic materials are specified for the weathercoat and paint is desired, it may be done as follows:

a. As soon as asphalt surface has dried, the surface shall be painted with an asphalt base aluminum paint.

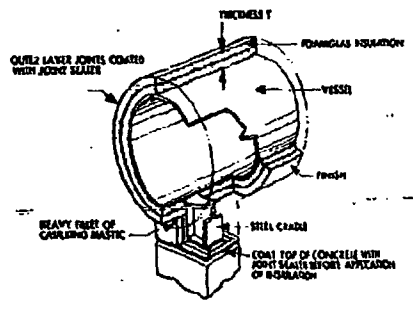

FOAMGLAS INSULATION ON VESSEL CRADLES & SUPPORTS

FIGURE 3

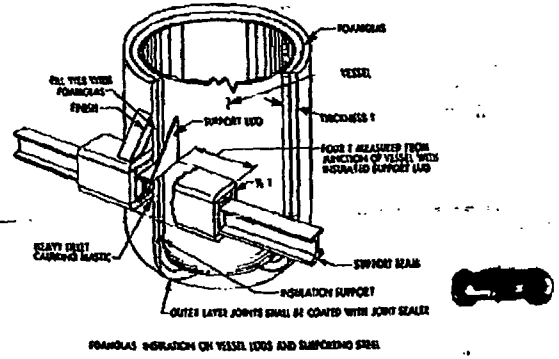

FOAMGLAS INSULATION ON VESSEL LUGS AND SUBMERGED STEEL

FIGURE 4

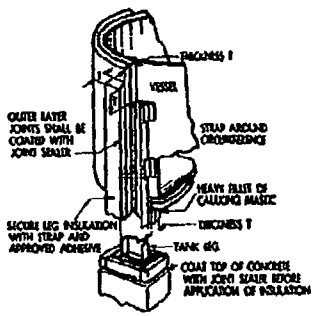

FOAMGLAS INSULATION ON VESSEL LEGS

FIGURE 5

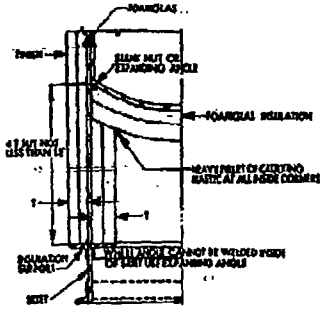

FOAMGLAS INSULATION ON VESSEL SKIRT

FIGURE 6

b. If color is desired, the asphalt surface shall be sealed with asphalt sealer and painted to desired color.

E. Flashing

On equipment located outdoors, it is imperative that proper flashing materials and methods be used at nozzles, manholes and other projections, as well as the junction of horizontal and vertical installations.

II. PIPING

A. Thickness

All piping shall be insulated with the proper thickness of FOAMGLAS insulation as shown in Table I. Insulation thickness shall be determined by lowest temperature at which the piping normally operates.

B. Application

1. Where single layer "Factory-wrapped" insulation is used, application shall be made as received, with joints tightly butted and sufficiently buttered with specified joint sealer. Wrapping laps shall be brushed with asphalt cut back and pressed firmly in place.
2. Where single layer "Regular" insulation is used, the FOAMGLAS insulation will be applied to piping with butt joints staggered and all joints tightly butted and buttered with joint sealer. A finish shall then be applied in similar manner as called for under "Equipment" in these specifications.
3. On multiple-layer insulation, where specified, the additional layer or layers shall be applied with side and end joints staggered over joints of preceding layer.
4. Only outer layer joints of multiple-layer applications shall be buttered with specified joint sealer before installation. The joints shall be drawn together when FOAMGLAS insulation is applied so that only a very thin vapor seal separates the section of insulation.
5. Service temperature limits of joint sealer shall be within range of cycling temperatures to which it is exposed.
6. FOAMGLAS insulation shall be applied with all joints fitted to eliminate voids. Large voids shall not be filled with vapor seal coating, but eliminated by refitting or replacing insulation.
7. Where piping is subject to excessive vibration, the insulation shall be coated with a thin application (to fill surface cells only) of specified anti-abrasive coating, and allowed to dry before application of the insulation. On single layer applications, coat bore surface of insulation. On multi-layer applications, coat all surfaces except outer surface of last layer and joint surfaces to be sealed.
8. Pipe insulation shall be secured in place with stainless steel insulation strap. Strapping shall be spaced on 9" centers where 18" length insulation is used and on 12" centers where 24" length insulation is used.
9. After specified thickness of insulation has been installed, a finish shall be applied as called for under "Equipment" in these specifications.
10. Expansion and contraction joints shall be installed in both horizontal and vertical straight run piping when piping will be subjected to temperatures which dictate the necessity of such joints. Chart at right may be used as a guide for determining number of joints required.
    a. Joists shall be packed tightly with cushioning material.
    b. When expansion and contraction joints are required, expansion and contraction should be provided by and in the flange cover of flanged joints when they occur in the line.
    c. Typical installations shown in Figures 7A, B, C.
11. FOAMGLAS insulation on flanges, valves and other fittings shall consist of prefabricated fitting covers of the same material and thickness specified for pipe insulation.
    a. Fitting covers shall be applied in same manner as pipe insulation. Stainless steel insulation strap will be so located that maximum strength and securement shall be obtained. Fitting fillers are not necessary, provided all joints are properly sealed.
    b. Protruding metal parts (such as valve stems) shall be thoroughly sealed.
    c. Hangers shall be on the outside of the insulation and shall not be in contact with the pipe. Curved metal shields shall be used between the hangers and the bottom of the insulation. Shield and hanger spacing shall be designed to limit the compressive stress between hanger and insulation to 33 psi.
    d. Outer surface of fitting covers shall be reinforced and finished in the same manner as specified for pipe insulation. Care shall be exercised that reinforcing cloth overlaps connecting pipe insulation a distance of not less than six inches.

These specifications are necessarily general in nature and do not cover all possible methods of application. Application procedure is at the discretion and responsibility of the design engineer to meet specific job requirements.

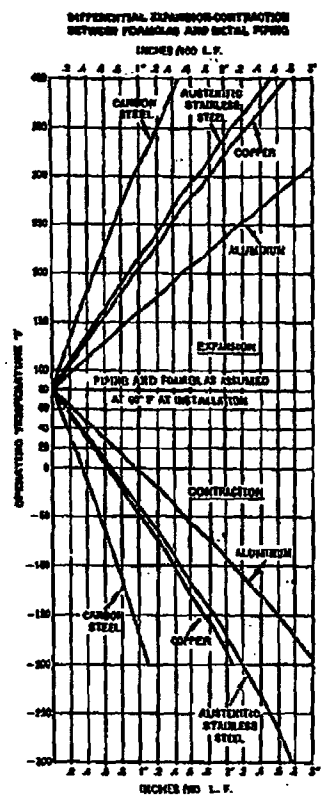

EXPANSION-CONTRACTION OF PIPING CALCULATED FROM 60° F TO OPERATING TEMPERATURE

EXPANSION-CONTRACTION OF FOAMGLAS CALCULATED FROM 60° F TO MEAN INSULATION TEMPERATURE

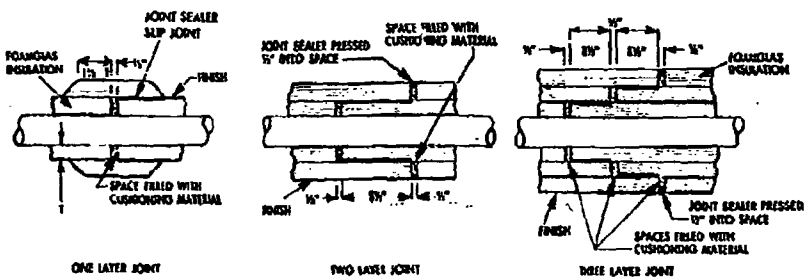

FOAMGLAS INSULATION EXPANSION CONTRACTION JOINTS FOR HORIZONTAL PIPING
NOTE: ALL OUTER LAYER JOINTS COATED WITH JOINT SEALER

FIGURE 7A

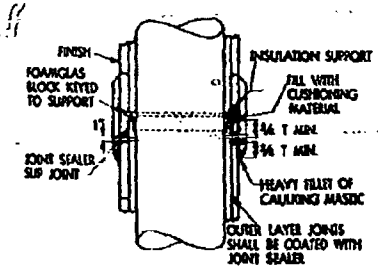

VERTICAL PIPING EXPANSION-CONTRACTION JOINT

FIGURE 7B

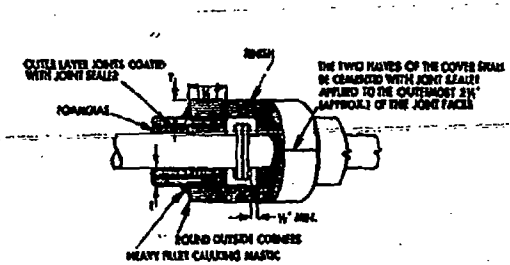

FOAMGLAS INSULATION ON LINE FLANGE

FIGURE 7C

RECOMMENDED ACCESSORY MATERIALS FOAMGLAS PIPING AND EQUIPMENT

[illegible]	[illegible]	[illegible]	[illegible]
Regular Hot Erection Asphalt	Adhesive & Sealer	-- 50°F. to 150°F.	Refineries
RS-1950 (Erection Asphalt) RS-2813 (Erection Asphalt)	Adhesive & Sealer Adhesive & Sealer	--100°F. to 150°F. -- 25°F. to 200°F.	H.H. Robertson Co. Farmers Bank Bldg. Pittsburgh, Pa.
Pittcote 300 Fibrated Asphalt Cutback	Coating & Sealer	-- 40°F. to 250°F.	Pittsburgh Corning Corporation
Pittcote 400 Vinyl Emulsion Mastic	Coating	-- 50°F. to 180°F.	Pittsburgh Corning Corporation
Pittseal 111	Sealer & Slipjoint	--100°F. to 200°F.	Pittsburgh Corning Corporation
Anti-Abrasive Compound 1A	Bore Coating	-300°F. to 150°F.	Pittsburgh Corning Corporation
Keenes Cement	Bore Coating	-- 25°F. to 500°F.	Local Builders' Supply Firms
CS Paint	White insulation coating Lagging adhesive for light-weight fabrics	-- 10°F. to 120°F.	Pittsburgh Corning Corporation
Primer Sealer 3A	Asphaltic Primer	-- 50°F. to 150°F.	Pittsburgh Corning Corporation
Glass Fabrics 10 x 10 asphalt treated or 10 x 20 asphalt treated 10 x 10 plain or 10 x 20 plain	Membrane for asphaltic coatings Membranes for vinyl coatings	(determined by coating used)	Pittsburgh Corning Corporation

FOR OTHER APPLICATIONS A FULL LINE OF ACCESSORIES IS AVAILABLE.

Outstanding Physical Properties of FOAMGLAS

Absorption of Moisture.....0.2% by volume when tested according to ASTM Designation C-240-61.
Acid Resistance.....Impervious to common acids and acid fumes.
Capillarity.....0
Coefficient of Expansion.....0.0000045/°F.
Combustibility.....Will not burn.
Composition.....A true glass—completely inorganic.
Compressive Strength (av., ult.).....100 lbs. per sq. in.
Density.....9 lbs. per cu. ft.
Flexural Strength.....75 lbs. per sq. in.
Hygroscopicity.....No increase in weight in 246 days in air at 90% RH.
Modulus of Elasticity.....180,000 lbs. per sq. in.
Permeability.....0.00
Shear Strength.....40 lbs. per sq. in.
Specific Heat.....0.20 btu per lb.
Thermal Conductivity:
At 50°F.....0.38 btu/hr./sq. ft./°F/in.
At 75°F.....0.40 btu/hr./sq. ft./°F/in.
Thermal Diffusivity.....0.42 sq. ft. per day.

FOAMGLAS complies with the requirements of Federal Specification HH-I-551c or revisions thereof, and ASTM C552

261061

General Office:
[illegible]
Pittsburgh, Pennsylvania 15222

Field Offices:
[illegible]
Houston, Texas 77005
3417 Bissonnet
P.O. Box 2410
713 526-4345

New York, New York 10017
230 Park Avenue
212 682-5080

Suite 705
Oakbrook Profes. Center
312 654-0810
Chicago Number 242-4048

Toronto 12, Ontario
[illegible]
416 [illegible]

PITTSBURGH pc CORNING

Litho in U.S.A.
31-104D Rev. 5M-1/66

FOAMGLAS® APPLICATION SPECIFICATIONS ...for UNDERGROUND PIPING

This specification covers the application of FOAMGLAS insulation for low pressure underground steam, hot water systems and chilled water systems.

261062

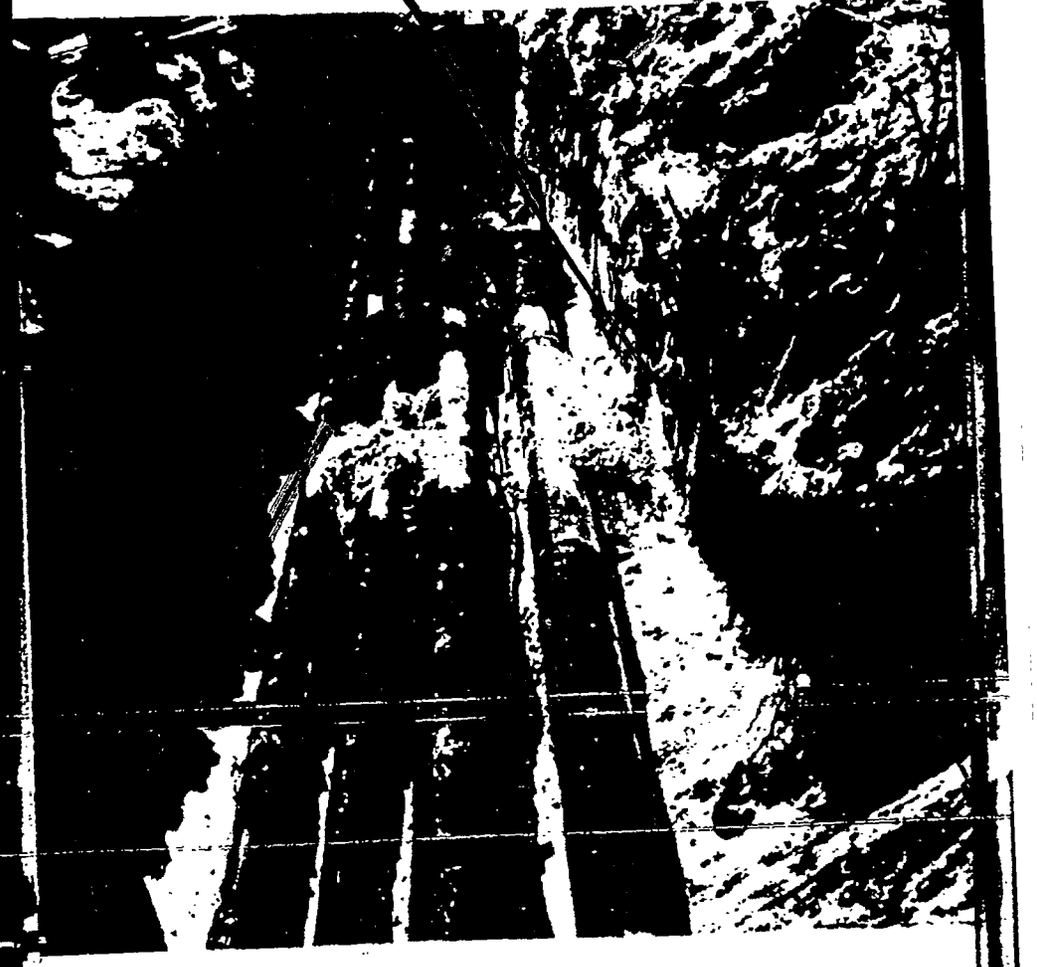

PITTSBURGH pc CORNING