NAVSHIPS 361-1647

PLAINTIFF'S EXHIBIT

WH-1103d.1

Technical Manual

1500-KW A-C GEARED-TURBINE DRIVEN GENERATOR UNIT(S)

FOR

UNITED STATES OF AMERICA

NAVY DEPARTMENT

WESTINGHOUSE ELECTRIC CORPORATION
Steam Division
[illegible]INGTON, PENNSYLVANIA, U.S.A.

TECHNICAL MANUAL 1430-003

BUREAU OF SHIPS ○ NAVY DEPARTMENT ○ WASHINGTON, D.C.

Westinghouse Electric Corporation Industry & Defense Products

Marine Division
Hendy Avenue
Sunnyvale California 94088

INSTRUCTION SHEET
Supplement "A" NAVSHIPS 361-1647
MAY 1970

Technical Manual NAVSHIPS 361-1647 is modified as follows:

Approval and Procurement Record Page: Remove and replace with attached Approval and Procurement Record Page
Pages 00.1 and 00.2: Remove and replace with attached pages 00.1 and 00.2
Page 100A: Insert Page 100.A facing page 100.1

Page 200.3: Remove and replace with attached page 200.3
Red Tab 5: Insert Red Tab 5 following page 439
Supplement A: Insert Supplement A CVA 63 Governor Modification as provided following Red Tab 5
Destroy superceded pages in accordance with current Navy Department directives.

Insert this page immediately following the front cover.

FORM # SV8084
DOCUMENT TRANSMITTAL

21 JANUARY 1971
DATE

Westinghouse Electric Corporation
SUNNYVALE, CALIFORNIA 94088

IN REPLY, REFER TO: 70-TD-5263 (12/11/70)
TRANSMITTAL SERIAL NO.

WESTINGHOUSE S.O. NO.	WESTINGHOUSE G.O. NO.	GOVERNMENT CONTRACT NO.	CUSTOMER ORDER NO.
1-41V2636	SE-24220	N00406-70C-0127	

CUSTOMER	DESIGN AGENT – CONTRACT ADMINISTRATOR	ULTIMATE USER
Commanding Officer (Code 202) NAVAL SUPPLY CTR, Puget Sound Brementon, Wash 98314	Chief DCASO Westinghouse Electric Corp. Sunnyvale, Calif. 94088	USN

PRINTS ARE:

☐ FOR APPROVAL

Drawings are in compliance with your specified requirements. Drawings "Approved" or "Approved with Modifications" authorize Westinghouse to proceed with manufacture. Modifications not in the contract or modifications made during or after drawing approval may result in a price change and/or shipment delay. To maintain shipping schedule, approved drawings must be received by Westinghouse no later than _____

☐ FOR CONSTRUCTION OR INSTALLATION

The equipment shown on these drawing(s) has been released for manufacture, any modification may result in a price change and shipment delay.

☐ FOR REFERENCE OR INFORMATION

☒ FOR FINAL DISTRIBUTION

DESCRIPTION; Supplement A NAVSHIPS 361-1647 (W) 1430-C66 | DD250 REQ'D: YES (X) NO ( )

CONTRACT LINE ITEM: Contract Para 2.8.2 PARTIAL ( ) FINAL (X)

Subject: Supplement A and Change Pages for NAVSHIPS 361-1647, Westinghouse 1430-C66

The enclosed Change Pages and Supplement A are forwarded for insertion in the subject manual.

XMTL	Copies	Addressee
4	50	Puget Sound Naval Shipyard
1	1	Sunnyvale Marine Service, 41-4, R.H. Overly
1	1	Boston Office, Steam Service Manager, W. F. Clark
1	1	New Orleans Office, Port Engineer, P.E. Collins
1	1	Springfield, Pa. Office, Steam Service Manager, F.J. Horan
1	1	Richmond, Va. Office, Steam Service Manager, A.F. Seeber
1	1	Atlanta Office, Steam Service Manager, W.F. Caperton
1	1	Houston Office, Steam Service Manager, R. E. Melany
2	2	San Francisco Office, Steam Service Manager, T. D. Hardin
1	1	Los Angeles Office, Steam Service Manager, M. J. Locklear
1	1	New York Office, Steam Service Manager, F. C. Lucke
3	2	ML&H Documentation Section, Arques
1	1	J. M. Gate, 11-2
1	1	Archives, Bldg. 123
2	2	Marine Mech. Engineering File 41-2
1	1	M. A. Penfield, 11-8
1	1	R. Niederer 11-8

OGNIZANT ENGINEER	DATE	Q.C. ENGINEER	DATE	
R. Niederer		G. G. Winterbourne	1/20/71	(L) 1-21-71

DRAWINGS ARE NOT NECESSARILY TO SCALE.

PAGE 1 OF 1 PAGE(S)

SEND APPROVAL OR INQUIRIES TO WESTINGHOUSE c/o:

DISTRICT ORDER CORRESPONDENT	STREET ADDRESS	CITY	STATE
R. Niederer (signature) FOR	Hendy Avenue	Sunnyvale, California	94088

NAVSHIPS 361-1647

Fred Gorham
Marine Engrg

Technical Manual

1500-KW A-C GEARED TURBINE-GENERATOR UNIT(S)

TURBINE(S) AND REDUCTION GEAR(S)

A-C GENERATOR(S)

D-C ROTOTROL(S) EXCITER(S)

GENERATOR VOLTAGE REGULATOR(S)

UNITED STATES OF AMERICA
NAVY DEPARTMENT

NAVY CONTRACT NObs-67530
WESTINGHOUSE ORDER WG-74200-T

NAVY CONTRACT NObs-68201
WESTINGHOUSE ORDER WG-75200-T

RETURN TO
PACIFIC COAST ARCHIVES
BUILDING
SUNNYVALE, CALIF.
P & T No. 51 Box No. 6180
SHELF LOCATION 2B7C

WESTINGHOUSE ELECTRIC CORPORATION
Steam Division
ESSINGTON, PENNSYLVANIA, U.S.A.

SEND TO ARCHIVES
ON Sept- 1966 DATE
NAME BK- 2. a/. L

TECHNICAL MANUAL 1430-C66

BUREAU OF SHIPS • NAVY DEPARTMENT • MARCH, 1958
Revised NAVSHIPS 361-1647, June, 1959

APPROVAL AND PROCUREMENT RECORD PAGE

BASIC APPROVAL DATA: 1,500 Kw Turbo-Generator Units;

BASIC APPROVAL

(*CVA-63*) - BuShips letter to W. E. Corp., Essington, Pa., NObs-67530(560-G) Ser. 560-45708 Dated 16, Oct. 1957

(*CVA-64*)- BuShips letter to W. E. Corp., Essington, Pa., NObs-68201 (560-G) Ser. 560-45680 Dated 21, Oct., 1957

Contract or P.O.	Date	Vessels Applicable	Quantity of Manuals	Building Yard
NObs-67530	8-30-55	CVA-63	50*	New York Shipbuilding Corp., Camden, New Jersey
NObs-68201	4-16-56	CVA-64	50*	New York Naval Shipyard, Brooklyn, N. Y.

REMARKS

*Stated number of manuals were supplied on these contracts, to Bureau of Ships, which retains control over ultimate distribution.

CVA-63 Governor Modification Supplement added - May 1970

CERTIFICATION

It is hereby certified that the technical manuals provided under contracts NObs-67530 and NObs-68201, originate with these orders and are not identical to any manuals previously prepared.

Signature [signature] 11/21/57 for

WESTINGHOUSE ELECTRIC CORPORATION
ESSINGTON, PENNSYLVANIA, U.S.A.

SERIAL NUMBER ASSIGNMENT PAGE

CVA 63

Equipment	Unit No. 1	Unit No. 2	Unit No. 3	Unit No. 4
Turbine	10-A-8756-1	10-A-8756-2	10-A-8756-3	10-A-8756-4
Auxiliary Condenser	10-A-8757-1	10-A-8757-2	10-A-8757-3	10-A-8757-4
Auxiliary Air Ejector	10-A-8758-1	10-A-8758-2	10-A-8758-3	10-A-8758-4
Generator	1-S-55-P-588	2-S-55-P-588	3-S-55-P-588	4-S-55-P-588
Exciter	1-S-55-P-589	2-S-55-P-589	3-S-55-P-589	4-S-55-P-589
	Unit No. 5	Unit No. 6	Unit No. 7	Unit No. 8
Turbine	10-A-8756-5	10-A-8756-6	10-A-8756-7	10-A-8756-8
Auxiliary Condenser	10-A-8757-5	10-A-8757-6	10-A-8757-7	10-A-8757-8
Auxiliary Air Ejector	10-A-8758-5	10-A-8758-6	10-A-8758-7	10-A-8758-8
Generator	5-S-55-P-588	6-S-55-P-588	7-S-55-P-588	8-S-55-P-588
Exciter	5-S-55-P-589	6-S-55-P-589	7-S-55-P-589	8-S-55-P-589

CVA 64

	Unit No. 1	Unit No. 2	Unit No. 3	Unit No. 4
Turbine	10-A-9721-1	10-A-9721-2	10-A-9721-3	10-A-9721-4
Auxiliary Condenser	10-A-9722-1	10-A-9722-2	10-A-9722-3	10-A-9722-4
Auxiliary Air Ejector	10-A-9723-1	10-A-9723-2	10-A-9723-3	10-A-9723-4
Generator	1-S-57-P-975	2-S-57-P-975	3-S-57-P-975	4-S-57-P-975
Exciter	1-S-57-P-976	2-S-57-P-976	3-S-57-P-976	4-S-57-P-976
	Unit No. 5	Unit No. 6	Unit No. 7	Unit No. 8
Turbine	10-A-9721-5	10-A-9721-6	10-A-9721-7	10-A-9721-8
Auxiliary Condenser	10-A-9722-5	10-A-9722-6	10-A-9722-7	10-A-9722-8
Auxiliary Air Ejector	10-A-9723-5	10-A-9723-6	10-A-9723-7	10-A-9723-8
Generator	5-S-57-P-975	6-S-57-P-975	7-S-57-P-975	8-S-57-P-975
Exciter	5-S-57-P-976	6-S-57-P-976	7-S-57-P-976	8-S-57-P-976

NOTE

The letter "S" in the Generator and Exciter Serial number means "STATOR". The rotor bears the same serial number with the letter "R" in place of the "S". The apparatus may be identified from data on the respective nameplate.

TABLE OF CONTENTS

Description	Red Tab
CHAPTER 1 - TURBINE EQUIPMENT	1
CHAPTER 2 - A-C GENERATOR	2
CHAPTER 3 - D-C ROTOTROL EXCITER	3
CHAPTER 4 - GENERATOR VOLTAGE REGULATOR	4
CHAPTER 5 - SUPPLEMENT "A"—CVA63 GOVERNOR MODIFICATION	5

NOTICE

SEE SUPPLEMENT "A" RED TAB 5 FOR
TEXT MATERIAL AND ILLUSTRATIONS
COVERING CVA-63 GENERATOR GOVERNOR
MODIFICATION.

CHAPTER 1—TURBINE EQUIPMENT

TABLE OF CONTENTS

Description	Page
List of Illustrations	100.3
Index	137
Section A - Turbine, Reduction Gear and Condensing Equipment Characteristics	101
General Application	101
Turbine Ratings	101
Reduction Gear Ratings	101
Oil System Capacity	101
Bearing Loads and Pressures	102
Auxiliary Condenser Data	103
Auxiliary Ejector Data	103
Section B - Description of Turbine and Accessories	105
General	105
Cylinder	105
Turbine Rotor	106
Nozzle Block	106
Impulse Blading, Curtis Stage	106
Impulse Blading, Rateau Stages	106
Interstage Diaphragm Seals	107
Curtis Wheel Chamber Labyrinth Seals	107
Turbine Gland Seals	107
Turbine Bearing, Combined Thrust and Journal	108
Oil Seal Ring	109
Steam Gland and Drain System	109
Steam Seal Manifold	109
Rotor Position Indicator	109
Steam Strainer	110
Throttle Valve	110
Steam Chest	111
Steam Chest Valve Setting	111
Governor & Steam Chest Servo-Motor Mechanisms	111
Governor Speed Changer	114
Section C - Description of Reduction Gear and Accessories	115
General Description	115
Rotating Elements	115
Pinion and Gear Bearings	115
Oil Seal Rings	116
Pinion and Gear Sprays	116
Governor and Oil Pump Drive Assembly	116
Main Oil Pump	117
Auxiliary Oil Pump, Manually Operated	117
Oil Cooler, Strainer and By-Pass Valve	117
Oil System	118
Lubricating Oil	119
Tachometer	119
Section D - Safety Devices	120
Overspeed Trip and Manual Trip Mechanism	120
Back Pressure Trip Mechanism	120
Low Oil Pressure Alarm Contact Maker	120

TABLE OF CONTENTS — Continued

Description	Page
Atmosphere Relief Valve	121
Testing of Safety Devices	121
(a) Overspeed Trip Mechanism	121
(b) Back Pressure Trip	122
(c) Low Oil Pressure Alarm Contact Maker	122
(d) Atmosphere Relief Valve	122
Section E - Condensing Equipment	124
Auxiliary Condenser	124
(a) General	124
(b) Shell	124
(c) Tube Fastening	124
(d) Expansion Joints	124
(e) Condensate Well	124
(f) Water Boxes	124
(g) Air Baffles and Offtake	124
(h) Accessories	124
Two Stage Air Ejectors	125
(a) General	125
(b) Construction	125
(c) Tube Fastening	126
Section F - Installation of the Unit	127
Alignment of Unit and Setting of Turbine Rotor	127
Alignment of Reduction Gear and Generator	128
Pipe Connections	128
Section G - Operation	129
General	129
Starting the Unit	129
Starting Auxiliary Air Ejectors	130
Parallel Operation	130
Shutting Down the Unit	130
Operation Precautions	131
Section H - Maintenance	132
Inspection	132
Weights	132
Rotor Clearance Diagram	132
Rotor Lifting Device (for Removing Bearing Shells)	132
Rotor Lifting Gear and Guides	132
Joint Sealing	132
Auxiliary Condenser	133
Air Ejector	133
Tools and Wrenches	133
Repair Parts	133
Section I - List of Repair Parts and Basic Plan List	134
Repair Parts	134
Basic Plan List	134
Plan List (Drawing)	136
General Index	137

LIST OF ILLUSTRATIONS

Figure	Title	Tab
T-1	Outline of Turbine, Gear, Generator and Condenser	1
T-2	Longitudinal Section, Turbine, Pinion and Gear	2
T-3	Curtis and Rateau Blading	3
T-4	Turbine Bearing - Combined Thrust and Journal	4
T-5	Reduction Gear Bearings	5
T-6	Interstage Diaphragm Seal Ring Assemblies	6
T-7	Rotor Gland and Labyrinth Seal Ring Assemblies	7
T-8	Steam Drain and Gland Piping Diagram	8
T-9	Steam Seal Manifold	9
T-10	Steam Strainer	10
T-11	Throttle Valve	11
T-12	Steam Chest	12
T-13	Governor and Speed Changer Assembly	13
T-14	Governor Servo-motor Mechanism	14
T-15	Oil Pump and Governor Drive Assembly	15
T-16	Main Oil Pump	16
T-17	Auxiliary Oil Pump	17
T-18	Oil Strainer, Oil Cooler, and By-Pass Valve Assembly	18
T-19	Low Oil Pressure Alarm Contact Maker	19
T-20	Oil System and Control Diagram	20
T-21	Overspeed and Manual Trip	21
T-22	Back Pressure Trip Assembly	22
T-23	Tachometer Mounting Assembly	23
T-24	Rotor Position Indicator	24
T-25	Rotor Clearance Diagram	25
T-26	Rotor Lifting Device for Removing Bearings	26
T-27	Rotor Lifting Gear and Guides	27
T-28	Atmospheric Relief Valve	28
T-29	Tools and Wrenches (Turbine)	29
T-30	Cylinder Joint Sealing Arrangement	30
T-31	Assembly of Auxiliary Condenser	31
T-32	Assembly of Air Ejectors	32
T-33	Repair Parts (Turbine and Reduction Gear)	33
T-34	Repair Parts (Condenser and Ejector Equipment)	34
T-35	Machinery Manufacturers Variations (CVA-63)	35
T-36	Machinery Manufacturers Variations (CVA-64)	36

CHAPTER 1
TURBINE, REDUCTION GEAR AND CONDENSING EQUIPMENT

SECTION A—CHARACTERISTICS

1-A-1 GENERAL APPLICATION

(a) Each unit consists of a high speed condensing turbine, arranged to drive an A-C generator and D-C exciter through the medium of a double reduction gear, which serves to reconcile the high speed required for efficiency in the turbine to the lower practicable generator speed. The turbine reduction gear and generators are mounted on a common bedplate, to which are secured also the oil cooler, condenser etc. An outline arrangement plan of the units is shown in Figure T-1.

1-A-2 TURBINE RATINGS

(a) The nominal rating of each unit is 1500 kw on an 80% power factor, 3 phase, 60 cycle, 450 volt, a-c generator; including 10 kw on a 69.4 volt, 144 amp., d-c exciter.

(b) The turbine is designed to operate on steam at a throttle pressure of 1050 psig with 940°F. total temperature, with an exhaust pressure of 2.5 inches Hg. absolute. The turbine is capable of operating with a maximum pressure of 1200 psig and 1000°F total temperature.

(c) The following steam consumptions are guaranteed when the units are operating under the designed steam conditions of 1050 psig, 940°FTT.

Load Kw	Exhaust Vac.	Steam Rate lb/hr./kw.
375	28.78 inches	15.00
900	28.28 inches	9.75
1125	28.04 inches	9.55
1500	27.50 inches	9.40

(d) Gland sealing steam, supplied from a separate source of approximately 10 psig, is required at loads below 300 kw. The required quantity of sealing steam will vary up to a maximum of 51 lb/hr, at no load. The normal gland sealing pressure is 1-2 psig.

(e) The gland leakage to the gland condenser is as follows:

At full load:	HP gland	14 lb/hr Steam (1370 BTU)
		5 lb/hr Air
	LP gland	6 lb/hr Steam (1370 BTU)
		5 lb/hr Air
At 1/4 load:	HP gland	6 lb/hr Steam (1337 BTU)
		5 lb/hr Air
	LP gland	6 lb/hr Steam (1337 BTU)
		5 lb/hr Air

Governor Valve Stem Leakoff 10 lb/hr.

A water suction of 0.5 to 1.0 inches is maintained at gland leakoff pockets to prevent escape of gland steam to engine room.

(f) The turbine exhausts into the auxiliary condenser at 2.5 inches Hg. absolute exhaust pressure.

(g) The normal operating speed of the turbine is 9532 rpm and that of the generator is 1200 rpm.

(h) The turbine overspeed trip mechanism is set to operate at 10,500 rpm (with an rpm tolerance of 2% plus or minus).

1-A-3 REDUCTION GEAR RATINGS

(a) The pinions and gears of the high speed and low speed rotating elements are of the single helical type and the reduction gear is designed to transmit a normal load of 2,115 BHP with the high speed pinion operating at 9,532 rpm and the low speed gear at 1,200 rpm.

1-A-4 OIL SYSTEM CAPACITY

(a) Oil system capacity: at high level 80 gallons; normal level 76 gallons and at low level 72 gallons.

1-A-5 BEARING LOADS AND PRESSURES

RADIAL BRG. LOADS & PRESSURES

PARTIAL ADMISSION STATIC LOADS, & TORQUE

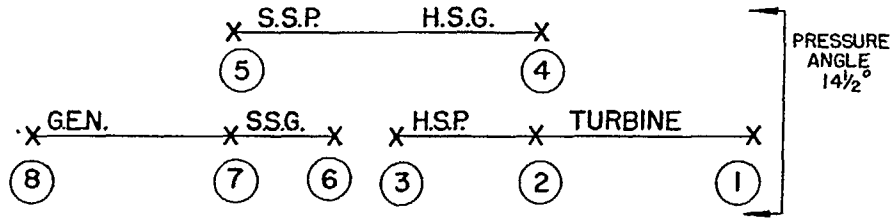

SUMMARY OF JOURNAL LOADS ON BEARINGS

BRG.	VERT. FORCE	HORIZ. FORCE	RESULANT	BRG. SIZE	AREA	PRESSURE	ANGLE
1	482	663	820	2 X 2	4	205	54°
2	2013	610	2100	3 X 2½	7½	280	17°
3	2013	610	2100	3 X 2½	7½	280	17°
4	200	1600	1610	3 X 2	6	268	83°
5	5910	1830	6190	5 X 4	20	310	17°
6	3530	1225	3740	4 X 3	12	311	19°
7	3530	1225	3740	4 X 3	12	311	19°
8	2840	—	2840	4 X 3	12	237	0°

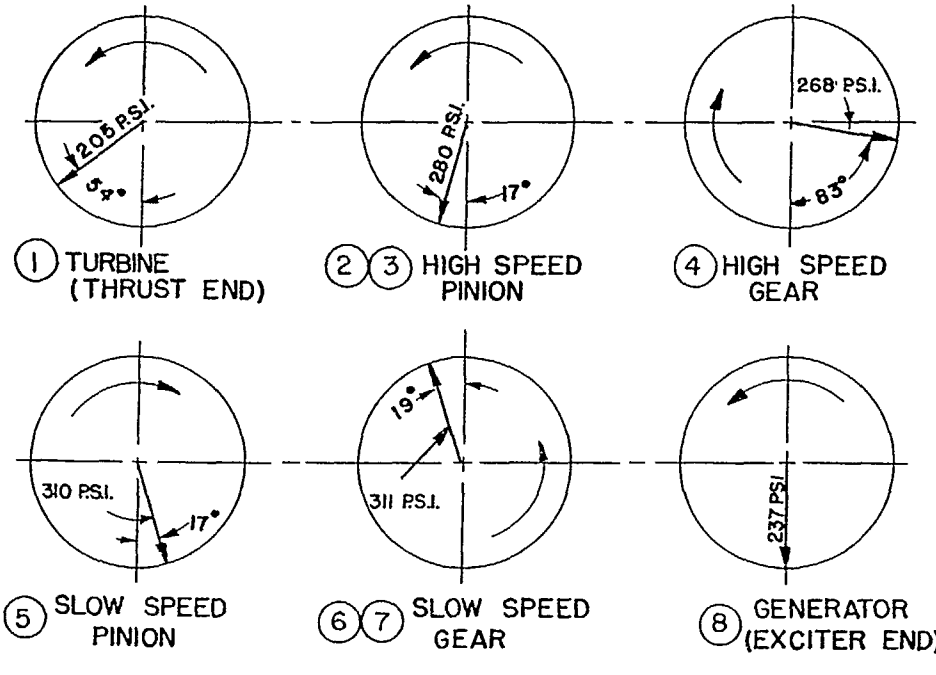

1-A-6 AUXILIARY CONDENSER DATA

Reference: Certification Data, Drawing No. 911-C-921 BuShips No. CVA63-300-C1738405

(a) TOTAL SURFACE . . . 1,265 sq. ft.

(b) STEAM CONDITIONS

Steam Condensed - Aux.
Turb. Exhaust . . . . . 14,073 lbs/hr
Steam Enthalpy at Exhaust . 1,081 Btu/lb
Total Heat to Condenser . . 14,133,500 Btu/hr
Condenser Vacuum . . . . . 27.5 inches Hg.

(c) CIRCULATING WATER CONDITIONS

Flow . . . . . 1,785 Gallons/min.
Tube Velocity . . . . . 6.0 Ft/Sec.
Temperature, Inlet . . . . $75^{o}F$
Temperature, Outlet . . . $90.9^{o}F$
Friction Drop . . . . . 10.6 Ft. of water

(d) TUBE DATA

Total Number 877
Size. . . . . 5/8 in. Diam.
Gauge . . . . . 18 BWG
Effective Tube Length . . . . . 8 ft. 9-7/8 in.
Total Tube Length . . . . . 9 ft. 00 in.
Material . . . . . 70-30 Copper-Nickel Alloy

(Mtl. Spec. MIL-C-15726)

1-A-7 AUXILIARY EJECTOR DATA

Reference: Certification Data, Drawing No. 1-JC-6184 BuShips No. CVA61-S6102-C-1507283

(a) STEAM CONDITIONS

Steam Pressure at Ejectors . . . . 135 psig
Steam Temperature . . . . . $395^{o}FTT$

(b) STEAM CONSUMPTION

First Stage . . . . . 141 lbs/hr
Second Stage . . . . . 94 lbs/hr
Total . . . . . 235 lbs/hr

(c) The two stage ejector unit shall remove free dry air plus associated vapors under the following conditions:

1) Free Dry Air, lbs/hr 12.6
2) Absolute Pressure, Ins. Hg. Abs. . . 29.0
3) Saturated Vapor, Temp. Deg. F. . . . 71.5
4) Cooling Water, gpm Min. 25.0
5) Cooling Water Inlet Temp. Deg. F . . 79.0
6) Pressure Drop through Cond., psi . . 5.0
7) Condensate Temp. Rise for Min. Flow Deg. F 26.5

(d) The gland condenser is designed for condensing 50 lbs/hr of gland leakoff steam mixed with 25 lbs/hr of air.

(e) *COOLING SURFACES OF CONDENSER*

Inter-Condenser #1 . . . . . 28.5 sq.ft.
Inter-Condenser #2 . . . . . 28.5 sq.ft.
After and Gland Condenser . . . . . 57.0 sq.ft.
Total . . . . . 114.0 sq.ft.

(f) TUBE DATA

Total Number 160
Size. . . . . 5/8 inches O.D.
Gauge . . . . . 18 BWG
Effective Tube Length. . 4 ft. 3-15/16 inches
Total Tube Length . . . 4 ft. 6 inches
Material . . . . . Admiralty Metal

(Mtl. Spec. WW-T-756 Type A).

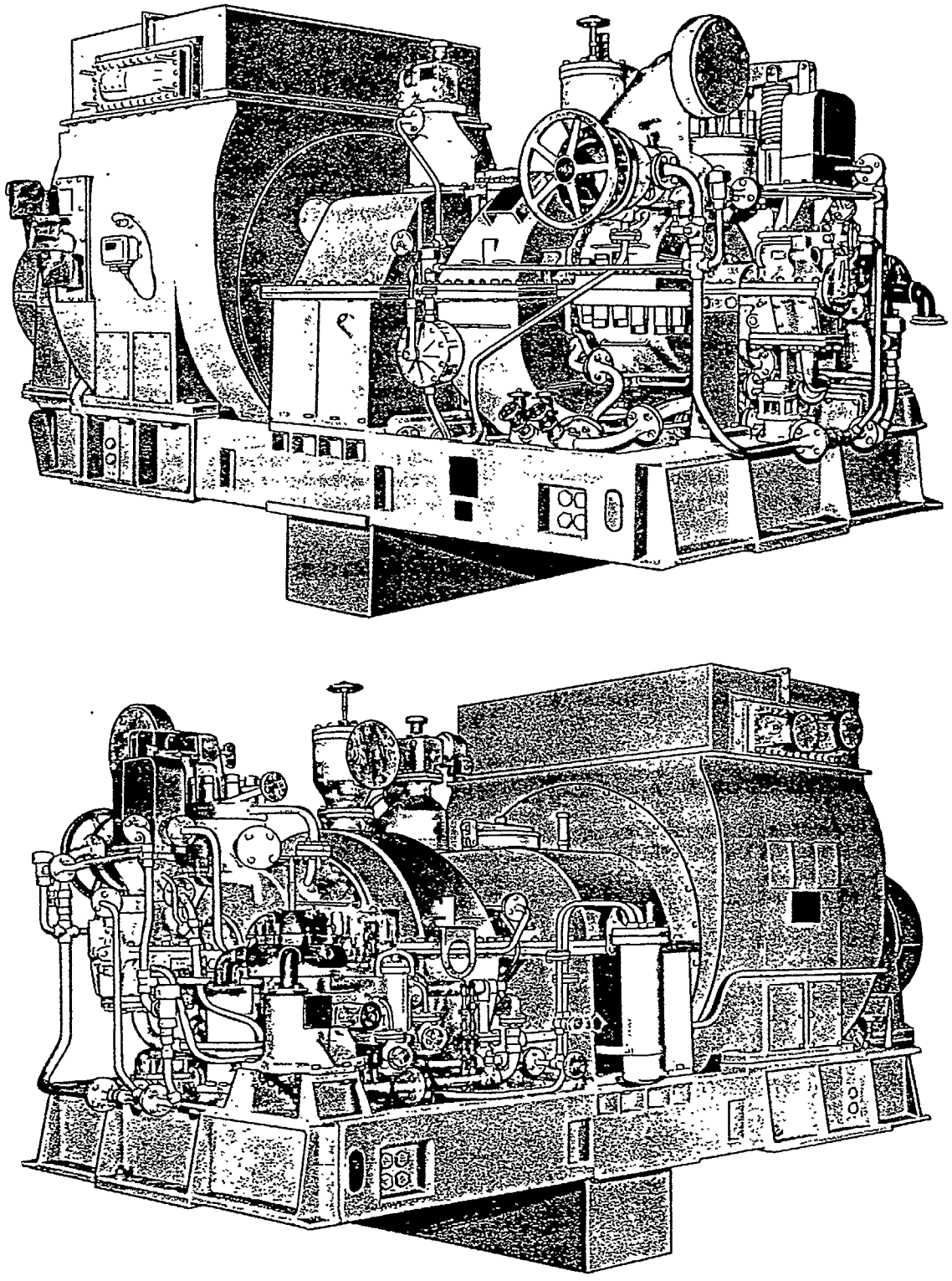

Turbine, Reduction Gear and Generator Assembled on Bedplate Ready for Shipping

SECTION B—DESCRIPTION OF TURBINE AND ACCESSORIES

1-B-1 GENERAL

(a) The turbine, of straight-impulse type, a longitudinal section of which is shown in Figure T-2 consists of a combination of Curtis and Rateau stages. The Curtis element consists of one pressure stage with two velocity stages. This is followed by six Rateau stages.

(b) The steam, after passing through the throttle valve and the steam chest valves, enters the first-stage nozzles where it is expanded to the pressure existing in the impulse chamber. The velocity energy, acquired in this expansion, is converted into rotative energy by the impulse blades. The steam is then expanded successively through the Rateau stages to the pressure maintained in the condenser thus imparting further rotative energy to the rotor.

(c) The turbine exhaust end cylinder is secured to the gear case by stud bolts mounted in a half flange. The half flange has been machined with a spigotted fit as shown in the illustration Figure T-2, by means of which the alignment of the turbine and gear are held to a common plane and base line. The thrust end is supported by a transverse plate which is bolted to the cylinder and the bedplate. The web of the transverse plate provides the necessary flexibility for longitudinal expansion and contraction of the cylinder.

1-B-2 CYLINDER

(a) The turbine cylinder consists of a base and cover, bolted together on a horizontal joint and each made in two pieces, joined at a vertical joint between the fourth and fifth blade stages. This vertical joint is made up permanently at initial assembly and the two pieces are henceforth treated as one. The horizontal joint flanges have been carefully machined to provide a true metal to metal joint. The horizontal joint of the two pieces that form the cylinder cover has been relieved, as shown in Figure T-30, by means of which joint sealing compound can be used to insure an absolute tight joint, in the event that at some future date leaks develop. The vertical joint has been treated in the same manner, the flanges of the inlet end cylinder base and cover being relieved as shown in Figure T-30.

(b) The pieces that make up the cylinder inlet end are cast from a high grade of cast alloy steel, the steam chest being cast integral with the inlet end cylinder cover. The exhaust end cylinder pieces are fabricated from a high grade of plate steel and the joint flanges are carefully machined to a full bearing surface, with metal to metal joints.

(c) The cylinder is protected from excessive steam pressures by the atmospheric relief valve illustrated in Figure T-28 which is set to open at 10 psig. The atmosphere relief valve is

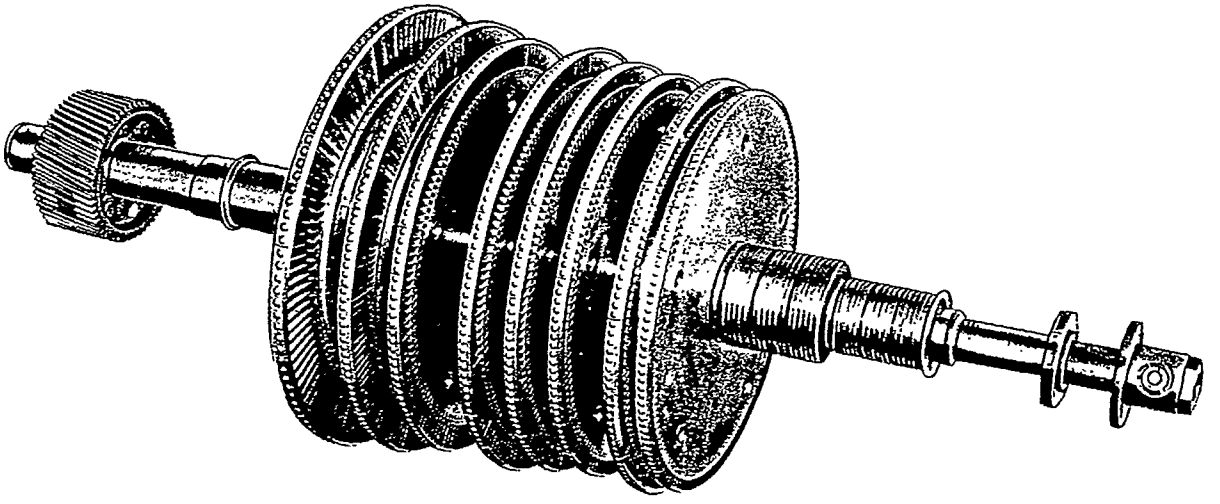

Turbine Rotating Element and High Speed Pinion Assembly

capable of relieving the full throttle flow of steam to atmosphere with the turbine exhaust casing pressure not exceeding 30 psig.

(d) The turbine cylinder is also protected by a back-pressure trip which will close the throttle valve when the back-pressure at the turbine casing reaches 5 psig pressure.

1-B-3 TURBINE ROTOR

(a) The turbine rotor shown in Figure T-2, is made from a high grade alloy steel forging. The blade discs are integrally machined from the solid forging. The rotor forging is bored out on the centerline through the greater part of its length to permit examination of the internal quality of the forged metal. The hole is afterward plugged and the plug serves as a lathe center during machining.

(b) The axial drilled passages through each of the rotor blade discs, are provided for the purpose of balancing the steam pressure on both sides of the disc, thereby substantially equalizing axial thrust on the rotor.

(c) The overspeed trip body and thrust collar are mounted on and secured to one end of the rotor shaft and the high speed pinion is rigidly connected to an integral flange at the other end.

(d) After the blades have been installed and locked in place and the final machining completed, the overspeed trip body thrust collar and high speed pinion are secured in place. The rotor is then dynamically balanced.

1-B-4 NOZZLE BLOCK

(a) In order to insure that a proper nozzle area will be employed for any given operating load condition, four nozzles are provided in the nozzle block which is constructed of forged alloy steel. The block is bolted to a machined face on the cylinder cover and is connected to the steam chest valves by internal passage machining. The arrangement of the nozzle element is shown in the illustration, Figure T-2.

1-B-5 IMPULSE BLADING, CURTIS STAGE

(a) The first stage of impulse blading in the turbine is shown in Figure T-3 and is of the velocity compounded type, having two moving rows of blades on the rotor and part of a stationary row between them, secured to the cylinder cover. The steam from the nozzles is directed to the first rotating row of blades, passing into the segment of stationary blades between the moving rows, and thence to the second rotating row of blades.

(b) The rotating blades are secured to the disc by means of a side entry type of fastening, the blade roots being pressed into axial machined slots, broached in the rim of the rotor disc. After all of the blades have been entered, the metal of the blade root ends are peened into a recess in the disc rim, to lock the blades in place. The blades are then shrouded into 26 groups, 18 of which consist of 6 blades and the remaining 8 groups of 5 blades each. The shroud strips are secured by riveting over the tenons on the ends of each blade.

(c) The stationary blades are mounted in "L" shaped grooves machined in the cylinder and locked in place and stiffened against vibration by a series of short keys which are caulked partly in the "L" of the groove and partly in a notch machined in the side of each blade root. The blades are milled from bar stock of stainless steel and are provided with an integral shroud, thus forming a closed passage for the steam flow. To provide additional strength, the blades are also banded together in groups. The blade shanks are machined accurately, to fit closely to one another and to give the correct spacing for the steam passage area.

(d) Blade shields are secured to the cylinder and extend around that portion of the circumference which is not utilized for the steam admission nozzles. These shields isolate the blade path from the remainder of the steam space and thus decrease the windage loss due to the blades rotating in the comparatively dense steam. In order to prevent any accumulation of condensation in the bottom of the shields, holes are drilled at the bottom, on the vertical centerline, to allow condensation to flow to drain.

1-B-6 IMPULSE BLADING, RATEAU STAGES

(a) The Curtis element is followed by the six Rateau stages shown in Figure T-3, which are divided from the former, and from each other, by interstage nozzle diaphragms. The nozzles for the Rateau stages are vane sections welded to inner and outer rings to make the complete diaphragm assembly. The diaphragms are made in halves and extend completely around the rotor, and each is fitted with the proper number of nozzle vane passages. Each stage of blading absorbs a part of the energy of the steam, reducing its velocity, after which it is further expanded through the next set of nozzles, regain-

ing a high initial velocity, to be absorbed in the next row of blades. The diaphragms are centered by means of radial disposed crushing pins. Retaining screws, through the diaphragm upper half into the cylinder cover, serve the dual purpose of preventing diaphragm rotation and also permit the cylinder cover to be lifted with the diaphragm upper half in position. Tapped holes for lifting eyes are provided in each diaphragm half, at the horizontal joint, whereby they may be lifted with ease.

(b) The diaphragm nozzles of the first three stages occupy only a portion of the circumference, varying in area in accordance with the increase in volume of the progressively expanded steam. The nozzles of the fourth, fifth and sixth stages however occupy the full circumference of the diaphragm. In order to prevent any accumulation of condensation between the diaphragms, holes are drilled at the bottom on the vertical centerline, to allow the condensation to flow to drain.

(c) The rotating blades of the first four rows of these single row Rateau stages are similar to the Curtis blade stages, being secured to the disc by means of a side entry type of fastening. The blade roots are pressed into axial machined slots, broached in the rim of the rotor disc. After all the blades have been entered, the metal of the blade root ends are peened into a recess in the disc rim, locking the blades in place. The blades are then shrouded into groups in the same manner as used in the Curtis stage.

(d) The rotating blades of the last two Rateau blade stages are secured to the turbine rotor by a type of fastening consisting of a "T" Root, with lugs machined on the blade shank which straddle and hold in the sides of the groove, thus resisting the tendency of the blade pull to spread the side of the blade groove. The blades are held against the top of the groove by half-round segments, caulked in place at the bottom. With this type of fastening, it is of course necessary to widen the groove at one point, in order to enter the blades in the "T" shaped groove and the last blade installed at this starting point is secured with pins, as shown in the illustration Figure T-3.

1-B-7 INTERSTAGE DIAPHRAGM SEALS

(a) Steam leakage from stage to stage between the stationary diaphragms and the rotor shaft is minimized by means of the seal rings shown in Figure T-6. These seals are stepped toothed labyrinth strips, integrally machined leaded brass rings, made in four segments and mounted in "L" shaped grooves machined in the diaphragms. The rings are held away with a small clearance from the grooved surface of the rotor shaft by the shoulders machined in the groove. The actual designed clearance dimension is shown in Figure T-25. The rings are held against the shoulders by flat springs and are prevented from rotating within the grooves by means of pins, that engage recesses, at the horizontal joint.

(b) The radial clearance between the rotor and the seal rings is indicated in Figure T-25, and is the designed "cold" clearance. The seal rings have been machined with small gaps between the segments to provide for circumferential expansion. The ring segments have been match-marked and numbered with their corresponding groove number to facilitate correct reassembly.

1-B-8 CURTIS WHEEL CHAMBER LABYRINTH SEALS

(a) In order to minimize leakage of high pressure steam from the Curtis wheel chamber and to lighten the load on the gland at the high pressure end of the turbine, a group of three seal rings, shown in Figure T-7, is mounted in the cylinder base and cover between the Curtis wheel chamber and inlet end gland.

(b) Each of these three leaded brass seal rings is fitted with twelve rows of integrally machined labyrinth strips, by means of which the steam escaping outward along the shaft is throttled to a much lower pressure. The rings are made in four segments and mounted in "L" shaped grooves machined in the cylinder, and are held away with a small clearance from the grooved surface of the rotor shaft by the shoulders machined in the groove. The rings are held against the shoulders by flat springs and are prevented from rotating by means of pins, that engage recesses, at the horizontal joint.

(c) The radial clearance between the rotor and the seal rings is indicated in Figure T-25 and is the designed "cold" clearance. Small gaps have been machined between the ring segments, to provide for circumferential expansion. The ring segments have been match-marked and numbered with their corresponding groove number to facilitate correct reassembly.

1-B-9 TURBINE GLAND SEALS

(a) At the point where the turbine rotor shaft extends through the ends of the cylinder, leak-

age of steam from, or air into cylinder is prevented by means of glands of the stepped tooth labyrinth type. These glands consist of a group of three leaded-brass rings, each fitted with ten rows of integrally machined labyrinth strips, made in four segments, set in "L" shaped grooves in the gland cases, and held against the shoulder of the "L" by means of flat springs. As shown in the illustration Figure T-7, the rings are prevented from turning by the pins, that engage recesses at the horizontal joint.

(b) The radial clearances between the rotor and the gland seal rings are indicated in the illustration, Figure T-25. These radial clearances are the designed "cold" clearances. In addition to the radial clearances, the alloy metal seal rings have small gaps between the segments, when cold, to provide for expansion and the segments are match-marked so they may be reassembled correctly.

(c) The seal rings are numbered consecutively starting with the outer-most ring at the thrust end of the unit, hence the gland and labyrinth seal rings at that end are numbered 1 through 6 and at the exhaust end, 7 through 9.

(d) Examination of the longitudinal section Figure T-2, shows that internal passages have been machined between the various ring assemblies. The cavity between rings No. 1 and 2 at the inlet end and that between No. 8 and 9 at the exhaust end are connected to the gland leakoff connections. The cavity between rings No. 3 and 4 at the inlet end is connected to the gland steam seal system as shown in the Steam Drain and Gland Piping Diagram, Figure T-8.

1-B-10 TURBINE BEARING, COMBINED THRUST AND JOURNAL

(a) Examination of the longitudinal section Figure T-2, shows that a thrust collar is located on and keyed to, the steam inlet end of the turbine rotor. The overspeed trip body, which is threaded on the rotor shaft, secures the thrust collar in its position, and it is at this point that the net rotor end thrust is transferred to the stationary parts by means of the thrust bearing shown in Figure T-4.

(b) The thrust bearing is of the double thrust type, having babbitted faced shoes on both sides of the thrust collar. The thrust bearing is mounted in a common cage with the journal bearing.

(c) The thrust bearing consists of four babbitted shoes "7" mounted on each side of the thrust collar "6", which are supported on the upper and lower leveling plates "8" and "9" and by rocking upon each other they allow the shoes to move relatively to one another, so that the babbitted faces of all the shoes on either side, are pressed against the thrust collar with equal force. Thus it can be seen that each shoe takes an equal share of the thrust load. On each side of the thrust collar, the inner leveling plates "8", supporting the shoes "7", rest upon the outer leveling plates "9", which in turn are carried in the casing "2" and base ring "3", both of which are made in halves. As may be seen in the longitudinal assembly, Figure T-2, the casing "2" and base ring "3" are supported in the cylinder base and enclosed by the bearing cover. Stop pins, mounted in the bearing cover, extend into milled keyways cut in the casing and base ring upper halves, preventing both of these from having any rotary movement.

(d) The correct axial position of the thrust bearing, and hence the correct axial location of the rotor is determined by the thickness of the inner and outer filler rings which are made in halves. The inner filler ring is located between the split casing "2" and the cylinder base and bearing cover. The outer filler ring is located between the end ring "15" and the cylinder base and bearing cover. The thickness of these filler rings must be such that the clearance as shown in Figure T-25 will be produced when the rotor is jacked toward the exhaust end of the turbine.

(e) The actual internal clearance of the thrust bearing should be .010 inch in order to permit establishment of a proper oil film between the thrust collar and the shoes. After filler rings of correct thickness have been installed and the proper running clearance is obtained, the clearance should be checked by rolling the rotor and jacking it from one extreme axial position to the other and measuring the end travel by means of a dial type indicator.

(f) Oil for thrust bearing lubrication is supplied to the cylinder base and by means of machined internal passages, the oil is directed to the journal bearing and to both sides of the thrust collar. The oil control ring "16" directs the oil escaping from the periphery of the shoes to an outlet, hence the thrust bearing operates under a constant oil bath.

(g) The rotating element, which consists of the turbine rotor, the rigidly connected pinion and the overspeed trip body is carried in three

journal bearings which are similar in general design. The bearings are shown in the illustrations Figures T-4 and T-5 and may be located in the longitudinal assembly, Figure T-2.

(h) The turbine rotor journal bearing, shown in Figure T-4 is mounted in a common casing with the thrust bearing, and is of the articulated self adjusting type. The split casing "2" has been internally machined to accommodate four babbitt lined journal shoes "4" each pivoted on the longitudinal disposed pin "5". The pins locate the journal shoes and permit the small angular movement necessary for the formation of an oil film between the shoes and rotor shaft.

(i) Oil for the journal bearing lubrication is supplied to the cylinder base (through the same flanged connection which supplies the thrust bearing) and by means of internal passages, the oil is directed to the annular groove machined on the outer surface of the split casing "2". Radial passages drilled in this groove, permit the oil to flow to and lubricate the journal bearing shoes "4", then escaping from the ends of the bearing, the oil flows to drain.

1-B-11 OIL SEAL RING

(a) The bearing oil seal ring, which is used to prevent the escape of oil along the shaft from the bearing housing is shown in Figure T-2. The ring, made in halves, of leaded brass, is of the labyrinth type and is fitted into a groove machined in the cylinder base and bearing cover. The seals are machined in the bore of the ring and are integral with it. The correct running clearance between the seal ring and the rotor is shown in Figure T-25.

(b) Any oil which creeps along the shaft is caught in the grooves in the oil ring and flows through a series of radial drain holes in the pocket, in the lower half of the ring. Holes are drilled in the baffle which permit the oil to flow to drain, however, these holes are drilled at sufficient height to maintain an oil level in the pocket, thus preventing the escape of oil vapor through the drain holes.

1-B-12 STEAM GLAND AND DRAIN SYSTEM

(a) The diagram of the steam gland and drain piping is shown in Figure T-8. Sealing steam for the glands is supplied in part from an auxiliary exhaust at approximately 10 psig. The gland steam supply is controlled at the steam seal manifold. A gauge is provided to indicate the supply pressure. The quantity of sealing steam required will be variable, up to 51 lb/hr maximum at no load, depending upon the operating load conditions of the unit. The steam pressure at the glands should be maintained at not more than 2 psig. The proper sequence of operation of the manifold valves is tabulated in Figure T-8.

(b) When starting the unit and during operation at light loads, steam is admitted from the auxiliary exhaust line to satisfy the sealing requirements. During operation at heavy loads, the amount of steam obtained from the high pressure gland leakoff, is more than enough for the sealing requirements, hence the supply from the auxiliary exhaust line is shut off, and the supply to the low pressure glands is reduced by adjusting the valves. The excess steam is discharged into the turbine at the fourth stage of Rateau blading. Thus it can be seen that in the line from the high pressure end, steam is fed to, or drawn from this gland, as determined by the pressure existing in the system.

1-B-13 STEAM SEAL MANIFOLD

(a) The steam seal manifold which is shown in Figure T-9 and located diagrammatically in Figure T-8, is the means by which the flow of gland sealing steam may be controlled. The operation of this manifold under various load conditions is fully explained in paragraph 1-B-12.

1-B-14 ROTOR POSITION INDICATOR

(a) The rotor position indicator, which is mounted in the thrust bearing housing end cover is shown in Figure T-24. A reading is taken by pushing lightly on the pad on the pointer "1" until the plunger "7", makes contact with the end of the rotor. Immediately after installation the rotor should be jacked toward the steam exhaust end and while in this position the pointer set at zero by loosening the socket head cap screw "9" to adjust it and then tightening up securely. Thereafter when a reading is taken, the displacement of the pointer from zero, will indicate the axial displacement of the rotor, one division on the graduated scale representing a rotor displacement of .002 inch. Spring "6" holds plunger "7" out of contact with the turbine rotor, when the indicator is not being used.

(b) The indicator readings should be taken with the unit carrying a load or with the rotor jacked toward the steam exhaust end, otherwise the clearance in the thrust bearing will give an erroneous reading.

1-B-15 STEAM STRAINER

(a) Steam is admitted to the throttle valve through the "Y" type flanged steam strainer illustrated in Figure T-10. The steam strainer body is cast from a high grade of chrome-moly steel and machined to accommodate a basket type strainer of perforated stainless steel. A cover of chrome-moly steel, secured to the strainer body proper with stud bolts, forms the closure. A stainless steel asbestos gasket is used to prevent joint leakage.The steam strainer body is fabricated to the cylinder cover.

1-B-16 THROTTLE VALVE

(a) The throttle valve shown in Figure T-11 is for the purpose of starting the unit by admitting steam or stopping the unit by shutting off the flow of steam. This valve is of the plug type and closes against a diffuser shaped inlet nozzle or valve seat. The valve actuating force is oil pressure, acting within an operating cylinder upon a piston and against the resistance of a compression spring.

(b) As shown in the illustration, the handwheel "5" is secured to a threaded shaft "6" which can be screwed in or out through the cover "4", and butts against a ball thrust bearing "16" is mounted in a recess in the piston "7", against the spacer "13", seated on the sleeve "11" and held in place by the retainer "17" the retaining ring "18". The piston "7" is secured to the end of the valve stem "19" which closes against the valve seat "24". Three compression piston rings "8" are mounted in annular grooves machined in the piston which reduce oil leakage to a minimum. A relay "13", loaded by the spring "12", is located within the sleeve "11".

(c) The pressure of the operating oil admitted to the body operating cylinder from the oil pump discharge, tends to move the piston "7" and hence the valve stem "19" in an opening direction, but such movement is dependent upon backing off the shaft "6" by rotating the handwheel "5". The compression spring "10" provides a force tending always to close the valve, which is normally over-balanced by the oil pressure acting in the opposite and opening direction.

(d) It will be seen that the valve is held open only by the oil pressure acting against the piston. Consequently, if any one of the tripping devices are actuated, causing loss of the oil pressure in the system and hence in the operating cylinder, the compression of the spring "10" will immediately force the valve against the seat, thus shutting off the steam supply to the turbine. When the valve has been tripped shut, restoration of the oil pressure in the cylinder cannot be accomplished until the handwheel "5" has first been turned to the fully closed position. This is also true for initial startups.

(e) The handwheel "5" must be in the closed position before oil pressure can be established within the cylinder, under the piston "7". The relay "13" loaded by the spring "12" is held in position sealing a drain orifice, against the set screw "33" which is threaded into the shaft "6" and locked in place by the nut "35". When for any reason the valve has been tripped shut, the relay "13", under the influence of the spring "12" is held against the set screw "33" and movement of the piston "7" and valve stem "19" in the closing direction opens the drain orifice formed in the sleeve "11". Hence oil from under the piston "7" may then bleed through the machined passages in the piston "7" and flow to drain through the opened orifice in the sleeve which is normally plugged by the relay. Should oil pressure be restored under the piston "7", with the handwheel in the open position, the oil would merely flow to drain as outlined above and the throttle valve would remain closed with the flow of steam to the turbine stopped. THE HANDWHEEL MUST BE TURNED TO THE CLOSED POSITION BEFORE TURBINE OPERATION MAY BE RESUMED.

(f) The valve stem "19" is guided by four bushings mounted in the operating cylinder body "3" and the cover "2". The inner and outer bushings "20" are so arranged in the cylinder body, so as to permit any oil bleeding along the valve stem to drain off through the provided connection, as shown. The inner and outer bushings "20" and "21", mounted in the cover "2" are so arranged to permit any steam leakage along the valve stem to be carried off through the flanged connection.

(g) A valve is formed on the valve stem "19" which seats upon the inner surface of the valve stem bushing "21", when the throttle valve is in the fully open position. Hence at this time, steam leakage along the stem is reduced to a minimum.

(h) Valve seat "24" is mounted in the cylinder and secured in position by the expansion ring "25" which is seal welded to the valve seat and the cylinder as shown in the illustration.

1-B-17 STEAM CHEST

(a) The steam chest is illustrated in Figure T-12. The valves are of the single-seated plug type. The seating surfaces are spherical and the seats are of the diffuser type.

(b) As shown in the illustration, the valves are carried by a flange, formed on the end of the valve lifting rod stem "5". The lifting rod is connected to the operating mechanism by levers and links.

(c) It is guided in the steam chest cover by bushings and is held against rotation by the guide stud "14" which is mounted in the cylinder and extends upwards through the flange. As the operating mechanism raises and lowers the lifting flange, it in turn raises the valves by engaging the adjusting nuts. The adjusting nuts are threaded on the valves and hence the point at which each valve opens, and the amount of opening, can be varied by means of these adjusting nuts.

(d) There is an unbalanced steam force tending to close the valves and they have sufficient clearance in the lifting flange so that they will seat themselves under steam pressure, whenever the lifting flange reaches the closed position.

(f) The opening through which the valve lifting rod stem extends into the steam chest, is sealed against escape of steam to the atmosphere by the provision of close fitting bushings (upper "7" intermediate "32" and lower "6"). Two steam leakoffs are provided, one, the high pressure between the lower bushing "6" and the intermediate bushing "32" and the other a low pressure from an annular groove machined in the upper bushing "7". The steam from the high pressure leakoff is led to a zone of lower pressure within the turbine cylinder, while the low pressure leakoff is connected to the gland eductor system.

(g) For establishing the proper lifts for the several valves a special fixture is provided, the application of which is shown on the tool illustration, Fig. T-29. It comprises a temporary cover to be bolted in place on the steam chest instead of the steam chest cover; an indicator mounting rod; and a rod to be set up on the valve stem.

(h) To use this fixture proceed as follows:- Disconnect the governor linkage and remove the steam chest cover. Bolt in its place, the valve setting fixture assembly as shown in Figure T-29, setting it so that four holes in the cover come over the four valves, and set up the rod "4". Drop the rod "3" through the proper hole in cover plate "2" so that it rests on top of No. 1 valve. Clamp two dial indicators to the rod and set one against the top of the valve lifting stem, and the other against the top of the rod "3" compressing them sufficiently to insure positive response when the stem is lifted.

(i) Set both indicator dials at zero. Lift the valve lifting stem until a reading shows on each of the indicators. The difference of the two readings will be the clearance for No. 1 valve. Three or four check readings should be taken and the differences should be the same in every instance.

(j) Next shift the rod "3" to No. 2 valve and repeat the above process. Do this with each of the four valves. We will then have a series of differences, thus for example:-

Reading	No. 1	No. 2	No. 3	No. 4
Stem	.049	.144	.267	.348
Valve Rod	.009	.018	.055	.050
Difference	.040	.126	.212	.298

(k) These differences are the clearances of the several valves between the valve lifting plate and the valve nuts and should be the same as listed in the tabulation of valve settings as shown in the illustration, Figure T-12.

(l) The amount the valve lifting stem is raised in the above operation is immaterial as long as it is enough to obtain readings on both indicators, and that successive trials show the same difference between the stem and valve readings.

1-B-18 STEAM CHEST VALVE SETTING

The steam chest valve adjustment was determined at the factory to the design load points, after which the correct lifts for the several valves were stamped on a plate, which is secured to the steam chest lever. These dimensions are shown in the illustration, Figure T-12.

1-B-19 GOVERNOR & STEAM CHEST SERVOMOTOR MECHANISM

(a) The governor, as shown in the illustration, Figure T-13 is of the vertical shaft flyball type,

in which the revolving weights move radially in response to changes in centrifugal force, resulting from changes in turbine speeds. The changes in centrifugal force and thus the position of the weights are transmitted to a cup valve "39", the position of which determines the amount of governor control oil that is permitted to pass through this variable orifice to drain, the balance of the control oil being directed to the operating servo-motor mechanism which is shown in Figure T-14.

(b) As shown in the Oil System and Control Diagram, Figure T-20, the H.P. oil from the main oil pump discharge (or from the auxiliary hand pump) is directed through external piping to the relay, "6" of Figure T-14, entering the servo-motor as shown. The H.P. oil also passes through a 3/32 inch orifice to become the governor control oil which is directed to the space above the cup valve, "39" of Figure T-13, and also to the cavity surrounding the bellows assembly "5" of Figure T-14.

(c) The portion of the H.P. oil that is piped to the servo-motor operating mechanism from the pump discharge, enters the servo-motor housing to a neutral position of the relay, Item "6" of Figure T-14. Examination of the illustration shows that this relay, seated on a spring "35", is forced upward, but restrained through linkage from moving except as permitted by a movement of the bellows and stem assembly "5". Thus the governor control oil, entering the servo-motor housing as shown, acts upon this bellows and stem assembly; closing the bellows and moving the stem "10" upwards against the action of the spring "36" with an increase in control oil pressure; and allowing the bellows to expand under the influence of the spring "36" and moving the stem downward with a decrease in control oil pressure.

(d) The movement of the stem and bellows assembly, permits the movement of the relay "6" in a similar direction. The movement of the relay permits the H.P. oil to flow through machined passages to either the upper or lower surface of the piston "2", causing the piston and piston rod "24" to move.

(e) The piston rod "24" is connected by linkage to the steam chest valves.

(f) Referring to Figure T-13, the governor hub, which holds the weights assembly, is driven by the high speed pinion, through a series of bevel gears, which are shown in the illustration Figure T-15. The governor weights are secured to a strap of spring steel mounted across the diameter of the hub, that is in the form of a ring. The spring is formed into a "U" at the center and the forces acting upon the weights flex the strap spring, thus transmitting the forces through the spring seat to the cup valve "39". When the governor is at rest, the strap spring holds the governor weights "43", in their inner-most position. The cup valve stem "37" rests upon a button "48" supported in the center of the governor weight strap.

(g) The entire rotating element of the governor is carried in two bearings (bushings), the upper "13" serving as a combined thrust and journal bearing while the lower "14" serves as a journal bearing only. The bearing bushings are mounted in the shaft housing "6" which in turn is located on and secured to the gear housing base.

(h) The space within the cup valve seat is supplied with governor control oil as described in paragraph (b) and the cup valve regulates the amount of oil permitted to drain, in proportion to the centrifugal force of the governor weights and thus controls the oil pressure acting under the cup valve seat and hence the pressure of the control oil.

(i) The balance of forces for any given operating condition, consists of the centrifugal force of the governor weights acting upward, through the strap, button and cup valve; opposed by the governor control oil pressure acting downward on the cup valve. The value of the governor control oil pressure is determined by the annular area of the variable cup valve orifice and the part of the centrifugal force of the governor weights not balanced by the force of the spring; hence, every turbine speed (and consequent value of centrifugal force on the governor weights) determines a definite value of governor control oil pressure.

(j) The operation of the governor and steam chest is as follows:- With the turbine at rest, the governor weights "43" of Figure T-13 are held in their inner-most position by the strap spring and the steam chest valves "3" of Figure T-12 are held closed through linkage connected to the operating piston "2" of Figure T-14, which is held in its upper-most position, when no oil pressure is available, by the action of the spring "60" of Figure T-14, pressing upwards upon the lever "11" of Fig. T-12. The Figure T-14 shows the steam chest servo-motor operating mechanism in a position with the turbine at rest. The spring "36" has expanded the bellows to the maximum and the stop nut "18" is almost seated

on the cover "32". The operating piston "2" is held in the upper-most position and the relay "6", is in a position just past neutral, with the relay closing the lower ported passage leading to the lower surface of the piston "2". The upper ported passage, leading to the upper surface of the piston is just cracked open.

(k) In order to start the unit it is first necessary to turn the throttle valve handwheel "18" (Figure T-11) approximately one-half turn in the opening direction, and depress the overspeed trip reset knob handle (Figure T-21) which will permit the throttle valve to be opened under oil pressure, when established. Start the auxiliary hand oil pump (Figure T-17) to insure turbine journal and thrust bearing lubrication as well as initial operation of the servo-motor mechanism and hence the initial opening of the throttle valve and steam chest valves. The operation of the hand pump supplies the throttle valve, governor and servo-motor mechanism with oil, building up control oil pressure in the space above the cup valve "39" of Figure T-13, and to the cavity surrounding the stem and bellows assembly "5" of Figure T-14. At the same time oil through the throttle valve line is supplied to the throttle valve operating cylinder under the piston "7" of Figure T-11, and through the H.P. line to the relay "6" of Figure T-14, passing through the upper ported passage to the upper side of the operating piston "2" of Figure T-14. As the manually operated auxiliary oil pump builds up these oil pressures, the control oil acting upon the bellows assembly "5" of Figure T-14, closes the bellows against the action of the spring "36", moving the stem "10" in an upward direction, which permits the relay "6" to also move upward, opening wide the upper ported passage to the upper side of the operating piston "2", moving it in a downward direction. The increased oil pressure under the throttle valve piston "7" of Figure T-11, has raised the valve stem "19" from its seat.

(l) The action of the operating piston "2" moving downward results in the steam chest No. 1 valve being opened by means of the connecting linkage. After the unit has been checked for satisfactory operation the speed may be increased by further opening of the throttle valve. As the turbine increases in speed, the main oil pump will be in operation and the operation of the auxiliary oil pump may be discontinued. As the turbine approaches normal speed, the centrifugal forces will begin to move the governor weights "43" of Figure T-13 outward. The unit is now coming under control of the governor and approaches the full, no load speed.

(m) As load is applied to the unit, the turbine speed decreases, and the centrifugal force acting on the governor weights is reduced. The governor spring force being constant, the reduction in centrifugal force is balanced by an increase in governor control oil pressure. This results from the upward movement of the cup valve "39" of Figure T-13, reducing the annular opening of this variable orifice and hence increasing the pressure of the control oil to the servo-motor mechanism. The increase in the control oil pressure acts upon the bellows assembly "5" of Figure T-14, moving the bellows and stem "10" upward, the relay "6" following in a similar direction in a porportional amount and opens the upper ported passage around the relay, permitting the H.P. oil to flow to the upper surface of the piston, the movement of which in a downward direction further opens the steam chest valves (by means of the connecting linkage) sufficiently to maintain the required turbine speed.

(n) If the load decreases, the turbine speed accelerates, increasing the centrifugal force on the governor weights and thus increasing the annular opening of the cup valve "39" of Figure T-13, which permits a greater amount of the governor control oil to flow to drain causing a reduction in the control oil pressure. This reduction in control oil pressure reduces the pressure upon the bellows assembly "5" of Figure T-14, permitting the bellows to expand by the action of the spring "36". Examination of Figure T-14, shows that the relay "6" would then be moved in a downward direction, closing the upper ported passage and opening the lower port, permitting the H.P. oil to flow to the lower surface of the piston "2", the movement of which in an upward direction closes the steam chest valves (by means of the connecting linkage) sufficiently to maintain the required speed.

(o) Thus it can be seen by examination of the Oil System and Control Diagram Figure T-20, that the governor is capable of closing the steam chest valves in minimum time, in the event of total loss of load. In the event of total loss of oil pressure, the throttle valve would immediately close under the influence of the compression spring "10" of Figure T-11; the overbalancing pressure of H.P. oil being lost. With such a loss of oil pressure, the bellows assembly "5" and stem "10" moving downward acting under the influence of the spring "36" would also close the steam chest valves, by means of the connecting leakage in minimum time. Restoration of oil pressure alone will not permit turbine operation to be resumed. The throttle valve handwheel "5" of Figure T-11, must first be

fully closed before oil pressure may be re-established under the piston "7" of Figure T-11, and the procedure outlined above in paragraph (k) for starting, carried out.

1-B-20 GOVERNOR SPEED CHANGER

(a) The hand and motor-operated speed changer, by means of which the speed or load of the unit can be varied is shown in Figure T-13. The principal parts of the electrically operated portions are:- The motor shafts, worms and worm wheels. The principal parts of the hand operated portions are:- The handwheel and shaft. Both the electrically operated and hand-operated portions act to regulate the turbine speed by means of changing the position of the valve seat "32".

(b) The electric motor, connected to the shaft "19" drives the worm "17" which in turn drives the worm gear "16" and worm gear "18". The worm gear "18" drives the clutch collar "21" by friction, caused by the spring "23" acting against the special washer (spring seat) "20". The collar "21" is secured to the shaft "76", which is threaded in the bushing "25" in the top of the speed changer housing "1". Since the bushing is stationary, rotation of the shaft "76" by the worm gear "18", screws the shaft either upward or downward, through the bushing "25" and housing "1" thus changing the position of the valve seat "32", and hence the speed or load corresponding to a given governor weight position.

(c) For hand operation, rotation of the hand knob is transmitted directly through the shaft "76" in the manner described above, to the cup valve seat "32", moving it upward or downward. The clutch collar "21" with the spring "23" and special washer "20" form a friction type clutch which is held in engagement by the spring "23". This clutch slips where the hand-operated feature is used and also serves as a safety device, in the event of overtravel of the speed changer motor.

(d) The hand adjustment knob "24", mounted on the shaft "76" has an indicating arrow directing counter-clockwise rotation for an increase in turbine speed or load and hence clockwise rotation for a decrease in turbine speed or load. The adjustment of the shaft "76" by the hand knob or speed changer motor is not identical with the adjustment (or change in position) of the valve seat "32". The shaft "76" is threaded with R.H. threads 11-1/2 threads per inch at the bushing "25" and 11 threads per inch at the cup valve seat "32". Hence, one revolution of the hand knob in a counterclockwise direction causes the shaft to travel upward approximately .087 inch through the bushing "25". (1.000 ÷ 11.5 = .087 inch). The cup valve seat "32", being prevented from turning by the guide pin "33", will move in a downward direction, with shaft movement, approximately .091 inch. Thus the new position of the cup valve seat is the difference between the two or a movement of .004 inch in the downward direction. The same figures apply to the adjustment of the knob in the opposite direction causing the cup valve seat to move in the upward direction. The amount of cup valve seat travel is identical per revolution of the shaft "76" for the hand adjustment knob or for the speed changer motor, operated by remote control from the control panelboard.

SECTION C—DESCRIPTION OF REDUCTION GEAR AND ACCESSORIES

1-C-1 GENERAL DESCRIPTION

(a) The illustration Figure T-2, shows a longitudinal section through both the high speed and slow speed rotating elements of the double reduction gear. The gear housing consists of a fabricated steel base and cover sections. The housing base is secured to the turbine exhaust end cylinder by stud bolts, mounted in a half flange. The half flange has been machined with a spigotted fit as shown in the illustration Figure T-2, by means of which the alignment of the turbine and gear are held to a common plane and base line. The gear housing base also serves as an oil reservoir, with the main oil pump and governor drive mechanism mounted at the horizontal flange. The cover, which is secured to the base at the horizontal flanged joint, is fitted with an inspection or access opening. The governor and speed changing mechanisms are mounted on the cover adjacent to the access opening.

(b) Lubricating oil, delivered by the main oil pump is supplied to the various gear bearings and meshing teeth of the rotating elements through internal and external passages fabricated to the housing. Drains are provided whereby the oil may be returned to the oil reservoir.

1-C-2 ROTATING ELEMENTS

(a) The rotating elements of the double reduction gear consist of one high speed pinion and high speed gear, together with one low speed pinion and low speed gear, all shown in Figure T-2. The pinions and gears are of the single helix type, carefully machined in order to produce a balanced tooth loading.

(b) The high speed pinion consists of a toothed rim, fitted with an internal flange. The exhaust end of the turbine rotor shaft is also machined with an integral flange as shown in Figure T-2 and the high speed pinion is shrunk on the turbine rotor shaft, the two flanges being secured together with fitted bolts.

(c) Two journal bearings, one on each side of the high speed pinion are mounted in the gear housing base and support this end of the turbine rotor shaft.

(d) The high speed gear consists of a truncated cone forging fitted with an integral rim machined with single helix teeth. The truncated portion of the cone is secured to the hub of the low speed pinion with fitted bolts.

(e) The low speed pinion, machined from a forging of high grade alloy steel, consists of a shaft and pinion integrally forged and carefully machined. The high speed truncated gear is then shrunk on the pinion shaft and after the axial drilled holes in the pinion and gear hubs have been commonly reamed, the two pieces are secured together with fitted bolts. The pinion shaft is supported in two journal bearings as shown in Figure T-2. A tachometer of the generator type, mounted on the gear housing, is connected to and driven by the low speed pinion shaft.

(f) The low speed gear with its integral shaft has been machined from a forging of alloy steel. The shaft is supported in two journal bearings and is provided with a flange whereby it may be rigidly connected to the generator coupling flange.

1-C-3 PINION AND GEAR BEARINGS

(a) The two journal bearings which support the gear end of the turbine rotor upon which the high speed pinion is mounted are similar in design. The actual size of the bearing shells are different, but in both cases these bearings are of the segmental shoe type and are illustrated in Figure T-5. Each bearing consists of a bearing shell split at the horizontal plane, the two halves being doweled together and internally machined to accommodate four (4) babbitt lined pads, each pivoted on an axially disposed pin. The pins locate each pad and permit the small angular movement necessary for the formation of an oil film between the pads and the journal surface of the rotor. A pin, extending from the bearing shell lower half into the gear housing base, prevents any circumferential movement of the shell. Lubricating oil, under pressure from the main oil pump, is supplied through internal passages to the location of these two bearings. Both bearing shells have been machined with an annular groove on their outer circumference and four radial oil inlet passages 90° apart, through the shells. Hence, the oil under constant pressure is directed to the bearing shells, flowing through the radial inlets to the journals and hence to the ends of the bearing where it may flow to drain.

(b) The two bearings which support the shaft upon which the low speed pinion and the high speed gear is mounted, are of the split shell type. Both of these bearings consist of a steel shell, split in the horizontal plane with the two halves doweled together. An annular groove has been machined on the outer circumference of each shell and oil inlet passages are provided on each side at the horizontal joint. The low speed pinion bearing shell is lined with genuine tin-based babbitt the entire length of the journal surface, the babbitt being relieved at the oil inlets, permitting the oil to cover the entire journal surface. The high speed gear bearing journal, as shown in the Figure T-2 is located in an annular groove machined in the shaft. Hence, for the high speed gear bearing in addition to the journal surface, the ends are also lined with genuine babbitt. The babbitted bearing ends are machined with radial grooves permitting the development of an oil film over the entire end surface. Any small amount of unbalanced end thrust that may be present is transferred to the stationary parts at this point, the high speed gear bearing serving as a combined journal and thrust bearing. Pins, located in the lower half of each bearing shell, extend into the gear housing base thus preventing any rotation of the shell. Lubricating oil is also supplied to these bearings by the main oil pump, through internal passages to the bearing locations, through the shell inlets, escaping from the bearing ends and flowing to drain.

(c) The two bearings which support the low speed gear shaft are also of the split shell type. The halves are doweled together at the horizontal joint. Both bearings are machined with an annular groove on the outer circumference which connects with two oil inlet passages, located at the horizontal joint. Pins in the lower bearing halves, extending into the gear housing base, prevent bearing rotation. Oil supplied by the main oil pump is directed by means of internal passages to the location of these bearings entering through the inlets to the journal surface, escaping at the ends and flowing to drain. The bearing at the turbine end of the low speed gear shaft is lined the entire length of the journal surface with a high grade of tin base babbitt. The journal surface for the bearing which supports the generator end of the low speed gear shaft is located in an annular groove machined on the shaft. Hence, for this low speed gear bearing in addition to the journal surface, a portion of the shell ends are also lined with babbitt. The babbitted bearings ends are machined with radial grooves, which permit the development of an oil film over this portion of the ends, for it is at this point that any small amount of unbalanced thrust that is present, will be transferred to the stationary parts of the gear. Thus, this bearing serves as a combined journal and thrust bearing.

1-C-4 OIL SEAL RINGS

(a) The oil seal rings which are used to prevent the escape of oil where the rotating shafts extend through the gear housing consist of labyrinth rings made in halves and baffle plates also made in halves. These rings are shown in the illustration Figure T-2 and are mounted in an annular groove machined in the gear housing base and cover. The oil seal ring and baffle assembly is constructed and machined to form several annular chambers encircling the rotating shafts with a close clearance. Several of the chambers are interconnected by radial and axial drilled passages which permit any oil creeping along the shafts to be caught in the labyrinths. The oil then flows into a pocket formed in the lower half of the rings and thence through the axial passages to drain back to the reservoir. These axial passages are located at sufficient height to maintain an oil level in the pocket, thus preventing the escape of oil vapor from the reservoir.

1-C-5 PINION AND GEAR SPRAYS

(a) Oil spray nozzles have been fabricated into the gear housing base structure, by means of which the meshing teeth of each pinion and gear are under constant lubrication. The location of these nozzles is indicated in Figure T-2, one nozzle serving the H.S. elements and two nozzles serving the L.S. elements. Each nozzle consists of a button fitting machined with a slotted head that flattens the oil stream into a fan shaped sheet which is directed between the pinion and gear teeth.

1-C-6 GOVERNOR AND OIL PUMP DRIVE ASSEMBLY

(a) The driving element for the governor and main oil pump which is shown in the assembly Figure T-15 consists of a main gear "5" fitted with an integral stub shaft, upon which is mounted a bevel pinion, that in turn drives the bevel gear. The bevel gear is secured to the drive shaft "3", which rotates in the bearing "6" and is connected at its lower end to the main oil pump, and at the upper end to the splined shaft of the governor, Item "8" of Figure T-13.

(b) The main gear "5", driven by the high speed pinion, rotates in the bearings "7" mounted in the pump support "2". The spacer "10" is located on the stub shaft which is integral with the main gear wheel "5". The pinion (of the bevel pinion and gear assembly "8") is mounted

on the stub shaft with the key "13" and secured in place with the elastic stop nut "11".

(c) The spiral bevel gear is mounted on the shaft "3" with the key "12" and secured in place by the coupling "4" which in turn is locked in position by the set screw "17". The thrust washer "9" is installed between the bevel gear hub and the thrust surface of the bearing "6".

(d) The entire governor and oil pump drive assembly is mounted on the gear housing base and the method of lubricating the bearings and meshing gears and pinions is shown in the Oil System and Control Diagram, Figure T-20.

1-C-7 MAIN OIL PUMP

(a) The main oil pump, shown in the illustration Figure T-16 is manufactured by the Gimple Machine Works Inc., of Philadelphia, Pa. The pump is mounted in the oil reservoir and is driven by the oil pump and governor drive assembly which is shown in Figure T-15.

(b) As shown in the Figure T-16, the pump consists of two driven helical gears, "6" and "7", mounted on the shaft "11" and meshing with the two driving helical gears "4" and "5". The driving gears are mounted on and secured to the shaft "10" with the key "14". The gear shafts "10" and "11" are mounted in the bearings "8" and "9". The driving and driven gears, with their respective bearings are enclosed in the pump discharge and suction housing halves "2" and "3".

(c) The lower end of the drive shaft "3" of Figure T-15 is threaded into the coupling "15" of Figure T-16, and secured in place with the set screw "16". The lower end of the coupling "15" engages splines machined on the upper end of the drive shaft "10".

(d) A nozzle pump suction is cast integral with the pump housing half "3" which is continuously submerged in oil in the reservoir. The rotation of the pump gears entrains the oil between the gear teeth and the housing wall, sweeping the oil from the suction to the discharge. Any oil return, except for the small amount of leakage, is prevented by the meshing teeth of the gears.

(e) As shown in the Oil System and Control Diagram, Figure T-20, the oil pump gear bearings are submerged in a constant oil bath, hence lubrication of the bearing surfaces is constant.

1-C-8 AUXILIARY OIL PUMP, MANUALLY OPERATED

(a) The manually operated, self priming auxiliary oil pump, which is used to supply oil for the system when starting up from a cold unit condition is shown in Figure T-17. It is operated by turning the crank "5" in a clockwise direction and will deliver 12.8 gpm when operated at 100 rpm. The crank "5", turns the shaft "12" and the rotor "7" in the same direction. The packing "13" and packing nut "11" prevent leakage along the shaft where it extends through the cylinder head "2".

(b) The rotor, which is eccentric to the centerline of the pump cylinder, contains three spring positioned vanes "9", which operate with small axial clearance and follow the inner surface of the pump body being pressed radially outward by the springs "10". Oil entering from the suction side is imprisoned between consecutive vanes and is carried around to the discharge side. The small axial clearance between the vanes and the cylinder heads, prevents oil from returning to the suction side except for a very small amount of leakage.

(c) The auxiliary oil pump furnishes oil for lubrication and simultaneously provides oil with sufficient pressure to actuate valves to start the unit. The discharge from this pump up to the point where oil is furnished at 10 psig for lubricating purposes, must be maintained at sufficient pressure to open the throttle valve and lift the governor valves. That portion of the oil for lubrication is maintained at 10 psig by the L.P. relief valve which functions as an adjustable orifice, thus protecting the bearings from high pressure oil. The remaining oil necessary to furnish pressure to open the throttle valve, governor valves, etc. will build up in pressure sufficient to perform these operations but not exceeding 75 psig as determined by the high pressure relief valve setting. Steam is thus made available through the opening of these valves to start the unit. The adjustable orifice set at 10 psig and the 75 psig relief valve are built into a common chamber in the filter cooler combination.

1-C-9 OIL COOLER, STRAINER AND BY-PASS VALVE

(a) The assembly shown in Figure T-18 consists of an oil cooler, duplex oil strainer, and a strainer by-pass valve. Two relief valves are installed in the oil inlet side of the assembly.

A study of the Oil System and Control Diagram Figure T-20 should be made which shows the diagrammatic location of this assembly.

(b) The L.P. relief valve, (adjustable orifice), installed adjacent to the strainer by-pass valve, is set to maintain an oil pressure of 10 psig at the oil cooler discharge. The H.P. relief valve, installed below the by-pass valve, is set to open at 75 psig, discharging into a drain line returning to the oil reservoir.

(c) The oil cooler is of the shell and tube type, with the oil circulating through the shell around the tubes, and the circulated cooling water making two passes through the tubes. The tubes are straight and are rolled into both tube sheets. The inlet-outlet tube sheet is secured between the shell and the inlet-outlet water chamber, but the reverse tube sheet is free to float endwise within the shell, it being sealed against leakage of oil to water or vice versa, by two rings of packing, clamped between the shell and the reverse chamber. Gaskets prevent joint leakage between the inlet-outlet water chamber, tube sheet and shell connections.

(d) Flanged oil and water connections are made to the shell, so that the water chambers can be removed without disturbing any piping. Vents are provided in the inlet-outlet water chamber cover. Both water chamber covers have been provided with zinc pencils, secured to pipe plugs. These zinc pencil electrodes should be examined at intervals of not less than thirty days and cleaned or replaced if their condition so warrants. Removal of the zinc pencil-plug from the reverse chamber cover permits full drainage from the tube side.

(e) Preferably the oil pressure in the shell should be higher than the water pressure in the tubes, so that a leaky tube will not cause contamination of the oil supply, although it will cause a loss of oil from the system, if the quantity of oil in the reservoir diminishes, the cooler should be examined at once for leaks.

(f) The oil strainer, also shown in Figure T-18 is of the duplex type and is equipped with magnets for removal of ferrous materials from the oil. The basket assembly, through which the oil must flow is of reinforced construction, the basket "44" of wire mesh being strengthened by an outer framework "36". Each basket is provided with a handle "38" of spring material, by means of which the basket can be lifted out for cleaning and which also holds the basket in place, the handle being compressed by the cover "5".

(g) The flow of oil to the individual strainers is controlled by the plug "3" which is so designed that when turned in its conical seat by the turning lever "20", it will change over the inlet and outlet connections from one strainer to the other, but will not completely cut off the oil flow during the change over period. The purpose of the jack lever "13" is to loosen the conical plug from its seat before the turning lever "20" is so applied. After the change over has been made, the jack lever may be tightened, securely seating the plug on the seat, preventing any oil bleeding around the plug.

1-C-10 OIL SYSTEM

(a) The arrangement of the oil system is shown diagrammatically in Figure T-20. This system consists essentially of a reservoir, formed by the reduction gear housing, a main oil pump, a cooler, a duplex strainer, an oil filter, hand-operated auxiliary oil pump for use when starting or stopping the unit and the connecting piping.

(b) The level of the oil in the reservoir is shown by the bayonet type oil gage, which is located on the generator end of the gear housing base. The oil level should be maintained so that it is between the maximum and minimum limit marks on the bayonet, with the unit in operation.

(c) During normal operation, the main pump discharges at pressure in excess of 75 psig. A part of this oil is led through machined passages and external piping to operate the governor and the steam chest and throttle valve operating mechanisms. The pressure in this part of the system is maintained at a maximum of 75 psig by a H.P. relief valve, built in as part of the oil strainer assembly which discharges the oil in excess of this value back into the reservoir. The remainder of the system oil is directed through a L.P. relief valve (adjustable orifice) to the strainer and cooler, to lubricate the bearings and the reduction gear teeth. This L.P. relief valve, functioning as a regulating orifice limits the pressure in this portion of the system to 10 psig. During operation, a portion of the H.P. oil is constantly being fed through a 7/32 inch diameter fixed orifice and an oil filter into the oil cooler-bearing oil supply system, by-passing the L.P. relief valve (adjustable orifice). Cut out valves are installed in the by-pass line, on each side of the oil filter as shown in Figure 20, which enable the line to be closed off during examination or replacement of an oil filter cartridge. The maximum permissible temperature of the oil leav-

ing any bearing is 180°F. The temperature rise of oil passing through any bearing is not to exceed 50°F.

(d) As shown in the Oil System and Control Diagram, Figure T-20, a low-pressure-alarm contact maker is connected in the most remote part of the system so as to sound an alarm, if the pressure at the bearings drops to 4 psig. The alarm contact maker is illustrated in Figure T-19. A by-pass valve, around the cooler (Figure T-18) is provided so that the cooler can be taken out of service for cleaning or repair while the unit is operating. The cooler circulating water should preferably not be turned on, when starting the unit, until normal bearing operation temperatures have been established. When the unit is in service the oil cooler water circulation should be carefully adjusted so as to prevent under-cooling of the oil.

1-C-11 LUBRICATING OIL

(a) Oil, Navy Symbol 2190-T, having a viscosity of 185-205 S.S.U. at 130°F should be used in the oil system.

1-C-12 TACHOMETER

(a) A tachometer of the generator type, illustrated in Figure T-23 is provided and installed on the generator end of the gear housing. The tachometer is driven by a shouldered shaft (4) threaded to the low speed pinion shaft and secured in place with the set screw (5). The rotating portion of the tachometer generator is mounted on the shouldered shaft (4) and secured with the lock washer (6) and locknut (7). The tachometer generator voltage developed may be read in terms of turbine rpm at the control station.

(b) An aluminum oil baffle (8) is provided which encircles the shaft (4) with a small clearance, and guards against oil drains from the pinion bearing leaking into the tachometer. However, an oil drain passage is provided outside of the oil baffle, in order that the minute amounts of oil which may creep along the shaft (4), are permitted to drain freely into the reduction gear housing.

SECTION D—SAFETY DEVICES

1-D-1 OVERSPEED TRIP AND MANUAL TRIP MECHANISM

(a) The overspeed trip mechanism shown in Figure T-21, provides a means of automatically releasing the operating oil pressure under the throttle valve operating piston which allows the piston spring to close the valve. The mechanism comprises a trip of the eccentric weight shaft type, and an oil-release valve, together with a resetting device and a manual trip mounted in a housing on the thrust bearing pedestal cover.

(b) The overspeed trip consists of an eccentrically loaded weight "26" held in a transverse hole in the rotor shaft by the retainer "23" and retainer nut "25". The centrifugal force acting on the weight is resisted by the compression of spring "24", which is adjustable by means of the liners "18" through "22" and "28".

(c) At the predetermined speed of 10,500 rpm, for which the device is set, the centrifugal force overcomes the spring resistance and the weight moves outward to the limit of its travel, striking the trip lever "10". This pushes up pilot valve "12" releasing to drain, the pressure above valve piston "6". The piston "6" in turn is moved upward by the compression of spring "15" and thereby opens to drain operating oil line leading to the throttle valve operating cylinder, shutting down the unit.

(d) When the speed of the turbine has dropped to approximately 7,300 rpm the trip mechanism can be reset by pressing down on the reset knob "9" which is connected to the plunger "11". With the pilot valve "12" closed and the piston valve "6" returned to its closed position, full oil pressure will be restored above the valve and piston, and unbalance them in the closing direction thus holding them on their seats.

(e) By pressing on the manual trip plunger "13", the same effect can be obtained as though the overspeed trip had functioned.

1-D-2 BACK PRESSURE TRIP MECHANISM

(a) The back pressure trip, illustrated in Figure T-22 consists of a valve, seating against an opening and controlling the flow of oil from a lower chamber in the valve body to an upper chamber and thence to drain. The valve is normally held in the closed position by spring which presses against an adjustable spring seat secured to the valve stem.

(b) A bellows assembly mounted on the bonnet by means of spacer bolts extends into a housing or cap which is connected to the exhaust space of the turbine through a pipe connection. The bellows is normally held at its maximum extension by a spring. However, should the unit go non-condensing, and the exhaust pressure reach 5 psig, the pressure on the bellows will overcome the spring resistance and compress the bellows which in turn moves the valve stem, unseating the valve. The opening of this valve releases the oil pressure in the operating oil line to the throttle valve operating cylinder and causes the unit to shut down in like manner to the overspeed trip.

1-D-3 LOW OIL PRESSURE ALARM CONTACT MAKER

The contact maker which closes the alarm bell circuit to warn the operator of dangerously low oil pressure is shown in Figure T-19. It is adjusted to operate and close the alarm circuit if the bearing oil pressure falls to a predetermined minimum of 4 pounds. With an increase in the bearing oil pressure, the contact maker will break circuit at 5-1/2 pounds. The operation of this device is as follows:

The bellows element is actuated by direct oil pressure, which in turn operates the switch mechanism to make or break the circuit. The switch is a single pole, single throw type, designed for 115 volt, 60 cycle service. A permanent magnet at the contacts provides a quick make and break, and prevents excessive arcing. The control element causes the switch to cut-in and cut-out in accordance with the setting of the range adjusting screw and differential adjusting screw.

The method of setting the switch mechanism is as follows:

1. As the adjusting screws for setting the range and differential are located inside the case, the cover plate should be removed.

2. The differential adjusting screw should be turned clockwise to the wider position.

3. The bearing oil pressure should be brought to a point at which it is desired to have the switch close the circuit (4 pounds).

4. The range adjusting screw should be turned until the switch just "closes".

5. The bearing oil pressure should be increased to the point at which it is desired to have the switch open the circuit (5-1/2 pounds).

6. The differential adjusting screw should be turned counterclockwise until the circuit opens.

The changing of the range adjustment screw raises or lowers both the "closing" and "opening" points but will not alter the differential between the two points.

After the "closing" and "opening" adjustments have been checked from the gauge pressures the cover plate should be replaced.

1-D-4 ATMOSPHERE RELIEF VALVE

(a) The atmosphere relief valve shown in Figure T-28 is mounted on the cylinder cover at the exhaust end of the turbine, as shown in the Figures T-1 and T-2. This valve, when operating, permits excess pressures within the turbine cylinder to be discharged to the atmosphere. The valve is water sealed and spring loaded and is adjusted to start opening when a pressure of 10 psig exists within the turbine cylinder at the exhaust end.

(b) The spring loading of the valve cannot be adjusted, the spring being permanently set for the 10 pound loading.

(c) The atmosphere relief valve consists of a cast steel body "19" and cover "12" secured to each other by means of the studs "13" and hex nuts "11". A stainless steel seat ring "18" is threaded into the body. The cover is threaded to receive the stem bushing "14", the bore of which is also threaded to receive the valve stem "3". The valve disc "17" is fitted with four guide legs extending into the bore of the seat ring "18". The upper end of the valve disc has a milled slot to receive the valve stem, the lower end of which has been machined with an integral collar, by means of which the valve disc is raised whenever the handwheel "2" is turned in the counterclockwise opening direction. The handwheel "2" is secured on the valve stem "3" with the hex nut "1". A stop collar "6" is located on the valve stem with the taper pin "7". The valve stem bushing "14" is prevented from rotating by means of the socket head cap screw "8" through the bushing into the cover "12". An indicator "4" is also mounted on the valve stem and secured with the taper pin "5". The brass indicator plate "20" secured to the cover "12" will show by the referenced position of the indicator "4", the relative position of the valve stem. Connections are provided, as shown, for the sealing water inlet and overflow drain.

1-D-5 TESTING OF SAFETY DEVICES

(a) Overspeed Trip Mechanism

The overspeed trip was set at the factory, to operate at 10,500 rpm and no additional adjustment should be necessary. No change should be made in the thickness of the overspeed trip body weight adjustment liners without first having checked to make sure that all the parts are clean and in proper operating conditions as determined by several successive trials, and that the tripping speed is incorrect and does require adjustment.

The overspeed trip mechanism may be tested by pushing in on the manual trip plunger, "13" of Figure T-21. Since this releases the operating oil pressure from above the trip valve piston "6", it actuates the valve and trips the throttle. This, however, only insures that the trip valve operates properly and that the throttle mechanism responds to the resultant drop in oil pressure.

To test the overspeed trip itself it is necessary to overspeed the unit.

CAUTION: The utmost care should be used in making this test.

To make the test proceed as follows:

1 - Gradually reduce the load to zero.

2 - Trip the circuit breaker and take the unit off the line.

3 - Close down on the throttle valve until speed drops slightly, indicating that the unit is under manual control with the steam chest valves in the wide-open position.

4 - Block the steam chest valves in this position.

5 - Remove turbine front end cover upon which the rotor position indicator is mounted and apply a reliable hand tachometer to measure the speed. Do not trust portable vibrating reed type tachometers for this purpose.

6 - Station a man at the manual trip ready to trip the unit by hand if the tachometer reader signals to do so.

Very gradually inch open the throttle valve and raise the speed to the tripping point (10,500

rpm). If the unit exceeds this speed without tripping, do not in any case go beyond 10,800 rpm but shut down and check the trip for cleanliness. If the trip is perfectly clean start up and check speed again. If the trip still fails to function at 10,500 rpm remove one liner of minimum thickness from the overspeed trip assembly and try again.

(b) Back Pressure Trip

The back pressure trip can be tested with compressed air when the unit is shut down, but should also occasionally be tested by operating the unit at no-load and building up back pressure by shutting down the circulating pump and air ejector. This trip should function at 5 psig.

(c) Low Oil Pressure Alarm Contact Maker

This device may be checked when shutting down the unit by noting when the alarm sounds and observing the bearing oil pressure gage on the gageboard. The alarm should ring when pressure falls to approximately 4 psig.

(d) Atmosphere Relief Valve

The spring loading of the atmosphere relief valve can be tested with compressed air, when the unit is shut down. However, this procedure requires that the valve be removed from the turbine cylinder. A more desirable arrangement is to test the valve with the unit operating at no load, and a built up back pressure. This test can be accomplished by first installing a blank metallic gasket in the flanged joint between the turbine exhaust and the back pressure trip mechanism. The unit can then be started without the condensing equipment being in operation and allowing the back pressure to build up. Watch the exhaust pressure gauge to see at what pressure the relief valve starts to open. In the ordinary sense, this valve is not susceptible of adjustment or regulation, the spring loading being fixed. However, shim material could be placed under the spring in an emergency, to increase the spring loading. Should the spring setting be too much out of the designed value, it is recommended that a spare be installed. After the valve has been satisfactorily tested, the unit should be temporarily shut down and the blank metallic gasket removed from the back pressure trip mechanism before endeavoring to restart the unit.

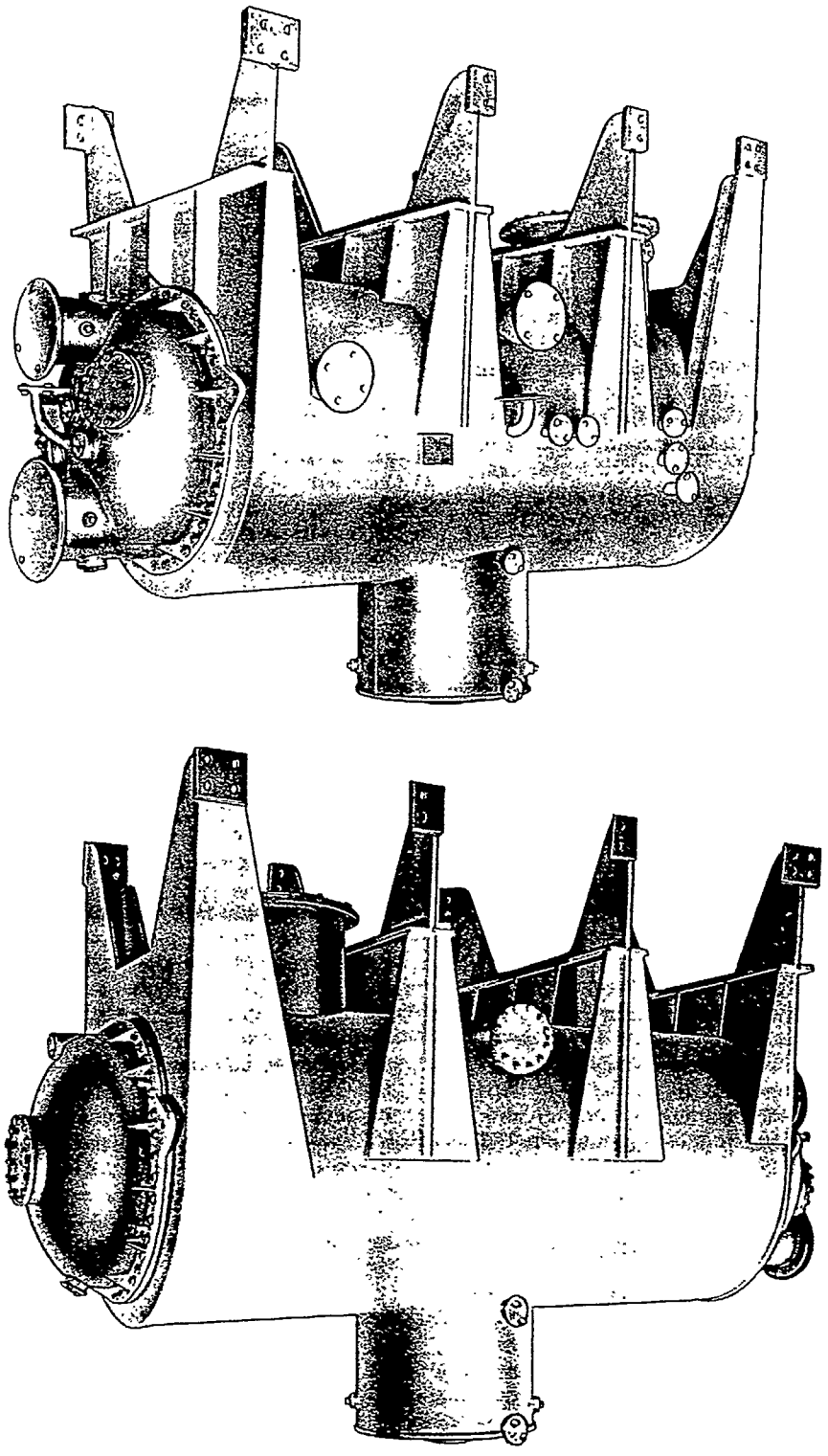

Auxiliary Condenser Assembly Ready for Shipping

SECTION E—CONDENSING EQUIPMENT

1-E-1 AUXILIARY CONDENSER

(a) General

The auxiliary condenser is of the radial flow, two pass type with the steam inlet located at the conventional position at the top. There is one circulating water inlet and one circulating water outlet opening in the inlet-outlet water box. The circulating cooling water makes two passes back and forth through the condenser shell. A condensate well is provided and the necessary connections are made to the shell for the admission of various vents and drains. The condenser is connected to the turbine exhaust by a flexible expansion joint. An assembly of the condenser is illustrated in Figure T-31.

(b) Shell

The condenser shell is fabricated of plate material and stiffened against external pressure by the tube support plates which are welded to brackets which in turn are welded to the shell proper. The tube plates are mounted directly on the shell ends and secured as shown in the Figure T-31. Fabricated to the shell proper are hanger supports, which are in turn secured to the turbine foundation.

(c) Tube Fastening

In order to allow for the differential expansion that takes place between the shell and the tubes, only the inlet end of the tubes have been rolled into the tube sheet. The outlet end of the tubes are secured to the tube sheet with expansion packing rings which in turn are secured between metallic rings, as shown in the Figure T-31.

(d) Expansion Joints

The flexible expansion joint by means of which the turbine cylinder exhaust flange is connected to the condenser shell inlet flange, consists of a stainless steel corrugated tube or bellows secured to flanges at each end by welding. The flanges have been machined with bolt holes matching those of the turbine exhaust and condenser inlet. The expansion joint is bolted to the turbine and condenser. Any differential expansion between these two pieces of apparatus is absorbed by this flexible joint.

(e) Condensate Well

An opening is provided in the bottom of the condenser shell, through which the condensate drains into a cylindrical well which is welded to the shell. The condensate rains down through the steam flowing to the lower tubes and drains from the shell into the well.

(f) Water Boxes

The water boxes are formed from copper-nickel alloy fabricated to a steel flange. Rib supports fabricated to the flange and the water boxes provide additional flange strength. The inlet-outlet water box has the inlet nozzle at the bottom and the outlet nozzle at the top and is partitioned horizontally through the mid-section so that the circulating water flows toward the reverse end of the shell through the lower bank of tubes and returns through the upper bank. The reverse water box is merely a domed cover of similar material which serves to direct the flow of water from the lower bank of tubes to the upper bank. Suitable access openings are provided at both ends to permit examination of the tube plates. Zinc plates are mounted on the inside of the access cover plates at each end.

(g) Air Baffles and Offtake

The steam entering the condenser shell has access to the full periphery of the tube bundle. A longitudinal "A" shaped baffle extends the full length of the shell and the apex of this "A" forms the air collecting space toward which the steam flows from all directions. The air is removed from the condenser at the inlet end where the air and vapors will last have contact with the coolest tubes. Before entering the internal offtake passage, the air and non-condensable vapors are forced to pass out among the tubes by means of a transverse baffle, thus insuring that they will receive the maximum degree of cooling before being withdrawn from the condenser.

(h) Accessories

As indicated in the illustration, Figure T-31, the inlet water box as well as the shell proper have been provided with relief valves. The relief valve mounted on the inlet water box is set at 20 psig while the relief valve mounted on the shell is set at 10 psig. On the steam inlet trunk provision has been made for the connection of a dial type vacuum gage. Thermometers

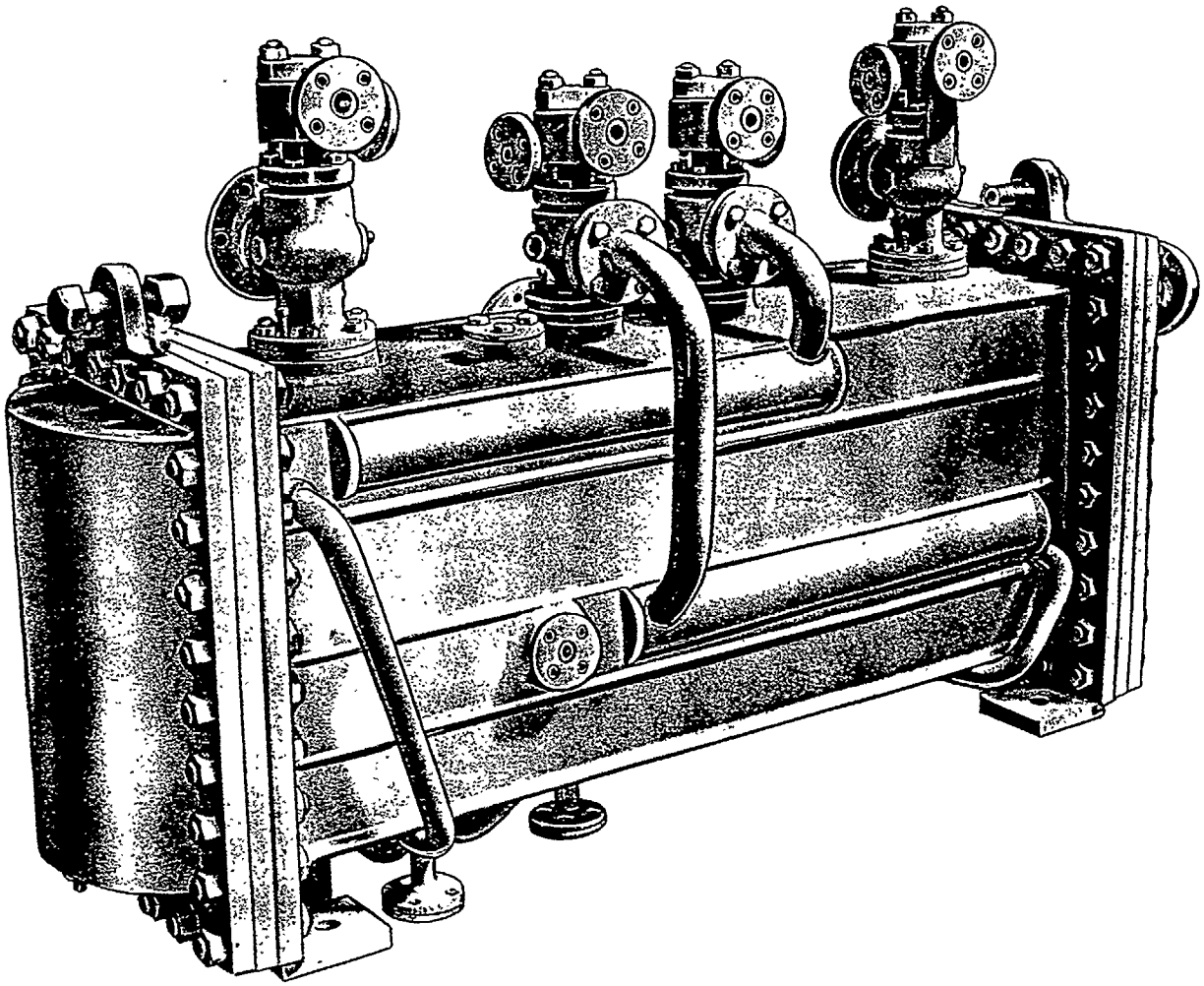

Auxiliary Air Ejectors Assembled on Inter-After and Gland Condenser Showing Reverse Water Box End

are mounted on the condenser shell, the condensate well and the circulating water inlet and outlet nozzles.

1-E-2 TWO STAGE AIR EJECTORS

(a) General

The air and uncondensed vapors are removed from the auxiliary condenser by twin two stage air ejectors, mounted on an integral surface type inter-and-after and gland steam condenser. The arrangement and structural details are shown in Figure T-32.

The gases drawn into the first stage ejectors are entrained by the steam jets from the first stage nozzles and are carried through the diffusers into the inter-condenser. There the steam is condensed and the gases cooled. From the inter-condensers, the gases enter the second stage ejectors where they are again entrained by the motive steam and discharged through the diffusers into the after and gland condenser, where they are vented to the atmosphere, the steam being condensed.

(b) Construction

For the sake of compactness and simplicity the first stage and second stage diffusers are recessed into the inter and after condenser structure so that only the mixing chambers project above the condenser shell and no interstage piping is needed. The piping required is the steam supply piping to the ejectors and the cooling water piping and condensate drains. The

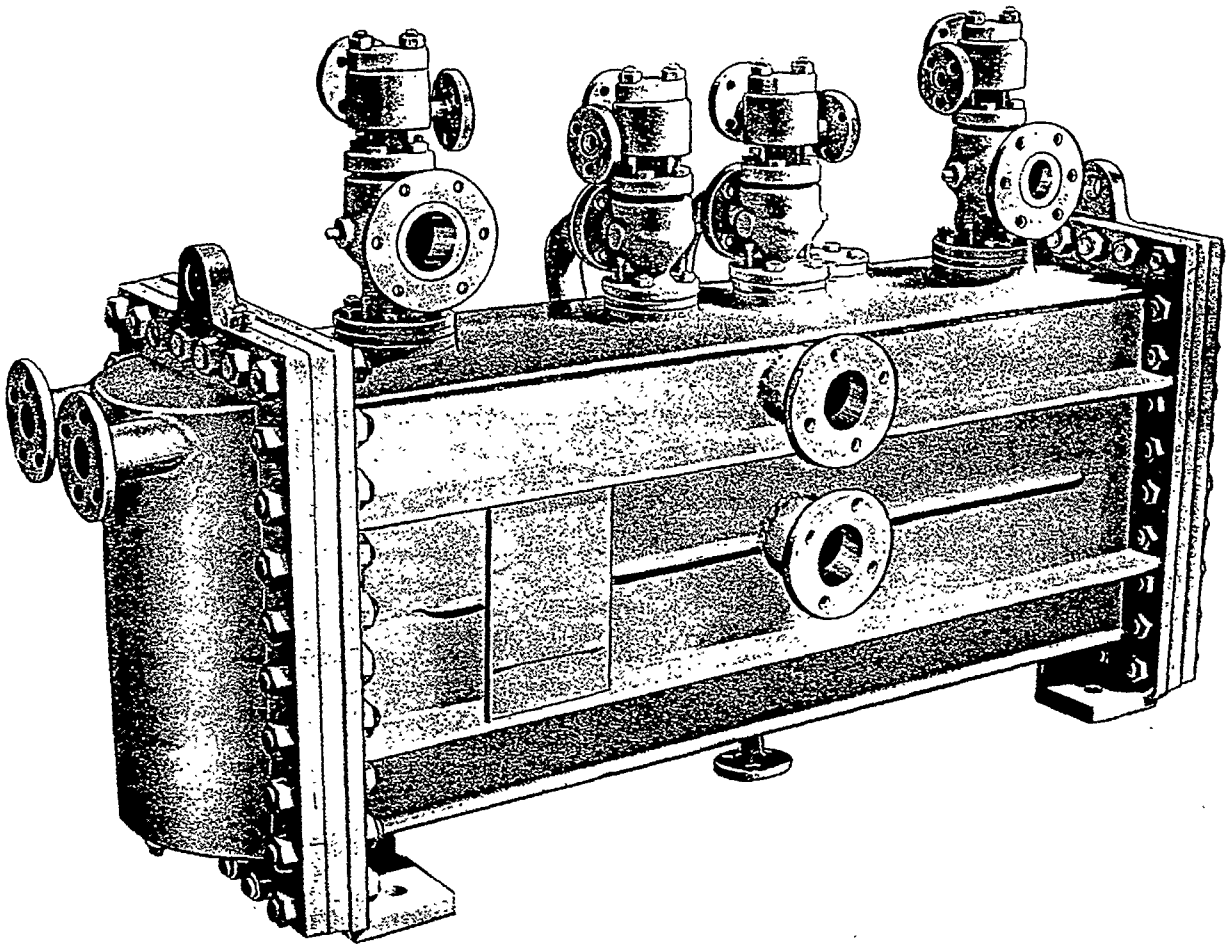

Auxiliary Air Ejectors Assembled on Inter-After and Gland Condenser Showing Water Box Connections

characteristics of the construction are shown in the Figure T-32, the path of the gases being indicated by arrows. The inter-and-after condenser shell is fabricated from plate by welding as are also the water chamber covers. In order to make it possible to cut out either ejector unit for examination or replacement without need for interstage valves, the inter-condenser is divided into two sections, each of which serves only one first stage ejector and is separately drained. Therefore, to work on either first-stage unit, it is only necessary to close the valve in the air line from the condenser and the steam stop valve for the ejector and the inter-condenser drain for that unit, then unbolt the connections from the ejector and remove it from the condenser. The after-condenser is also divided into two sections but both receive the vapors through a common opening. However, since the after-condenser is at atmospheric pressure, it is only necessary to be careful in removing the ejector to guard against any vagrant puffs of steam by using clean pieces of canvas which may also be used to cover the opening in the after-condenser while the ejector is removed.

(c) Tube Fastening

As shown in the illustration, the tube plates are mounted between the shell flange and the water box flanges and are commonly secured. In order to compensate for the differential expansion between the shell structure and the tubes, the latter has been rolled and flared into the tube sheet at the inlet end only. At the outlet end of the tube, the tube sheet has been counter bored and threaded. This opening is then packed with copper foil packing which is held securely in place by ferrules threaded into the counter bore.

SECTION F—INSTALLATION OF THE UNIT

1-F-1 ALIGNMENT OF UNIT AND SETTING OF TURBINE ROTOR

(a) The bedplate of the unit is supported at three points on seating pads and is bolted down at these points only, as shown in Figure T-1. Each turbine generator unit was carefully aligned in the shop, the bedplate having first been set perfectly level. After the several parts had been set on the bedplate and correctly aligned, they were doweled to the bedplate. It is therefore evident that if the bedplate has been set upon a properly leveled foundation in the ship, the parts will be in alignment as established at the factory and the relationship of the parts should be unchanged.

(b) When the unit was first assembled, the turbine cylinder cover was inverted and the turbine rotor was placed in it and adjusted axially to obtain the proper clearance dimension between the nozzle block and the first rotating row of impulse blades, as shown in the Rotor Clearance Diagram Figure T-25. The distance from the low pressure end of the cylinder cover to the face of the turbine rotor at the exhaust end, was then measured. This dimension was recorded and is also stamped on the turbine cylinder base horizontal joint flange at the low pressure end.

(c) The rotor, (with the thrust bearing but without the thrust bearing liners) was then placed in the cylinder base, which had previously been doweled and bolted to the gear housing base, and the rotor was adjusted axially until the dimension from the rotor to exhaust housing agreed with the figure stamped on the flange. Next, the axial distance from the thrust bearing casing flange (Figure T-4 Item "2") to the housing was measured and the inner filler ring (Figure T-4, Item "12") of proper thickness was installed. Then, with the turbine rotor barred tight toward the exhaust end, the axial dimension from the outer surface of the end ring (Figure T-4 Item "15") to the housing was measured the nominal thrust clearance subtracted therefrom and the outer filler ring (Figure T-4, Item "14") was ground to this value and installed. The thrust clearance was then checked by barring the rotor first one way and then the other and comparing the positions in the housing.

(d) In the event that a new rotor should ever be installed in the unit, the process described above should be carried out to insure establishment of proper internal clearances in the turbine.

(e) With the turbine rotor located as described above, the proper loading of the turbine and high speed pinion bearings were checked. If these three bearings were originally put in line with a mandrel, the two pinion bearings will be unequally loaded. To load them equally, the turbine inlet end bearing will actually have to be raised .016 inch by moving the support (Figure T-2, Item "21") the required amount. The high speed pinion bearing loading may then be checked by:

(1) Rolling out the high speed pinion generator end bearing #3 and noting the down spring of the shaft which should be .0015 inch, as measured on the shoulder just outside the journal.

(2) Rolling out the high speed pinion turbine end bearing #2 and noting the down spring of the shaft which should be .001 inch, as measured on the shoulder, adjacent to this journal, on the turbine side.

NOTE: IT IS MORE IMPORTANT TO OBTAIN THE CORRECT RATIO OF THESE DEFLECTIONS, THAN A SPECIFIC VALUE OF EITHER, FOR THE ABOVE VALUES ARE SUBJECT TO A TOLERANCE OF .001" PLUS OR MINUS. THE DEFLECTION OF #2 BEARING SHOULD BE 70% OF THAT AT #3 BEARING.

With the turbine rotor located correctly in the bearings, the high speed gear and slow speed pinion were installed, rolling the turbine rotor as necessary to enter the teeth in mesh. The criterion of proper alignment is uniform tooth contact, hence a check was then made to insure balanced tooth loading. The high speed pinion journals were then clamped, so that they would ride hard down on the bottom half of the bearings. The high speed pinion teeth were then coated with Prussian Blue and the high speed pinion and gear rotated together and the resulting marking on the gear teeth observed. Any adjustment that was necessary to produce a uniform tooth contact for the high speed element was made by carefully scraping the babbitted faced pinion journal bearings. The scraping should be limited to the tolerance of the bearing bore.

(f) With the turbine rotor and the high speed pinion and gear element in this satisfactory and true position, the low speed gear was then placed

in the journal bearings, rolling the gear as necessary to bring the gear and pinion teeth in mesh.

(g) The low speed rotating element was then checked for a balanced and uniform tooth contact. The low speed pinion was coated with Prussian blue and rotated with the gear and observing the markings upon the latter. In most cases no adjustment was required, the tooth loading being constant. For those cases where an adjustment of 0.0002 to 0.0004 inch was required, the low speed gear bearing was carefully scraped the required amount.

1-F-2 ALIGNMENT OF REDUCTION GEAR AND GENERATOR

(a) The only variable in the alignment of the reduction gear and generator is the position of the generator stator in relation to the gear housing. The generator stator is independently mounted on the bedplate and hence its position with respect to the gear housing is, to a limited degree, adjustable.

(b) With the turbine and reduction gear located as described above in Paragraph 1-F-1, the generator was then moved into position with the generator rotor flange and low speed gear flange mounted on the spigot fit and loosely bolted together. Feeler gauge readings were then taken between the coupling faces at four equidistant points. Here as in the turbine, it is endeavored to have a balanced and uniform tooth contact and as well a balanced loading upon the two slow speed gear bearings. To produce these conditions the coupling faces are then drawn together in such a manner to produce the following feeler gauge readings. With a zero reading at the top in the 12 o'clock position, there should be a gap of 0.010 inch at the bottom or 6 o'clock position. The establishment of this 0.010 gap, greater at the bottom of the coupling faces is the equivalent of bringing the coupling faces together in a parallel condition and then raising the generator outboard bearing a value of 0.039 inch. With the generator stator clamped in this position, the securing bolt holes were reamed and with fitted bolts, secured to the bedplate.

1-F-3 PIPE CONNECTIONS

(a) The steam pipe connected to the turbine throttle valve steam strainer must not be rigid because, if it were, it could move the unit out of alignment. The steam inlet pipe connections should be made with long radius bends supported at a point close to the turbine. When making this connection the pipe should never be sprung into place. It should be made so that the joints match properly.

(b) Before connecting the steam line to the turbine the line should be thoroughly blown out with high pressure steam to remove any foreign matter such as dirt, scale or joint compound, which if carried into the turbine could prevent the closing of the steam chest valves and cause overspeeding or plug up part of a nozzle throat, thus reducing the capacity and efficiency of the unit.

(c) Wet steam is objectionable as it causes much more rapid erosion of the blades and nozzles than does dry steam. It also reduces both the efficiency and capacity of the unit. Slugs of water whether from priming of the boilers or the picking up of condensation in the pipe line, if carried through the turbine cause serious shocks, vibrations and speed fluctuations or may trip the overspeed trip mechanism. If the pipe connections are such as to allow condensation to collect in the steam line, drains must be installed for use when starting up.

SECTION G—OPERATION

1-G-1 GENERAL

(a) When turbines are started from a cold condition they are subject to expansion moments caused by the temperature of the incoming steam. Care, must therefore be exercised in warming-up the turbine to obtain uniform heating of the turbine parts. During the warm up period the turbine should be inspected for any unusual noise, for correct oil flow and bearing temperatures, for satisfactory gland sealing steam flows and for freedom of operation. Before proceeding with the warming up, a time schedule and check list should be prepared so that the steps listed below will be accomplished in sufficient time and in a satisfactory manner.

1-G-2 STARTING THE UNIT

(a) The starting procedure is as follows:

Step 1. See that the circuit breaker and main generator switch are open.

Step 2. Cut in all resistance in the field rheostat.

Step 3. See that the throttle valve is in the fully closed position. Make sure that the overspeed trip mechanism is in operating condition.

Step 4. Check the oil level in the reservoir and the temperature of the oil.

SPECIAL CAUTION: Except in extreme emergency such as battle conditions, units should not be started up until the oil in the reservoir is at least 60°F. Oil below 60°F should be removed from the reservoir and preheated to that value before the unit is turned over.

When starting up with oil in the reservoir between 60°F and 100°F, the unit should be operated slowly until such time as the inlet oil to the bearings is 100°F or until such time as there is a free flow from the bearings, at which point full speed may be attained and load applied.

Due caution should be used when starting up with cold oil for lower oil temperatures require lower warming up speeds.

Step 5. Drain the steam inlet piping.

Step 6. Open the drains from the throttle valve, steam seal manifold and vent the turbine glands.

Step 7. Start the circulating cooling water pump to auxiliary condenser.

Step 8. Start the condensate pump, recirculating condensate if necessary.

Step 9. Start the auxiliary condenser air ejector as outlined below, in the paragraph 1-G-3.

Step 10. Depress the reset handle on overspeed trip (Figure T-21). Prime the lubricating system thoroughly with the auxiliary oil pump, and continue operating this hand pump until the unit is operating at sufficient speed for the main oil pump to take over.

Step 11. Open the throttle valve handwheel one-half to one turn, sufficient to permit the turbine rolling immediately so that the turbine rotor will be heated evenly. Note: When the throttle valve handwheel has been turned in the opening direction the oil pressure in the system, as established by the operation of the auxiliary oil pump, will act upon the throttle valve operating piston opening this valve sufficiently to permit the initial flow of steam to the steam chest valves and hence the turbine. The steam chest valves will be in the partial open position being under the influence of the steam chest operating mechanism.

Step 12. As soon as the rotor has started turning, turn steam on the glands using not more than 2 pounds pressure.

Step 13. Operate the hand trip to check the operation of the tripping mechanism.

Step 14. Fully close the throttle valve to re-establish oil pressure under the throttle valve operating piston, followed by reopening the throttle valve handwheel one-half to one turn. After several minutes operation at this low speed open the throttle valve handwheel one or two additional turns, permitting a greater steam flow. Bring the turbine speed up slowly, as the vacuum rises, coming up to normal speed in a period of not less than five minutes. The unit is now coming under the influence of the governor which acts to control the speed.

Step 15. See that the bearing oil pressure is maintained between 7 and 10 pounds.

Step 16. Close all drains.

Step 17. Check lubricating oil temperature and if normal operating temperatures have been reached, start circulation of cooling water through oil cooler.

Step 18. Gradually open the throttle valve additional turns until the turbine is operating at normal full, noload speed.

Step 19. Adjust the voltage regulator for normal voltage of the generator. (Reference should be made to Chapters 3 and 4 for further study).

Step 20. Connect the generator to the line and put on load.

1-G-3 STARTING AUXILIARY AIR EJECTORS

(a) The operation of the auxiliary air ejectors is simple and should require very little attention, however, the designed steam conditions must be adhered to for satisfactory operation. An excess of a few percent in pressure may be tolerated although wasteful of steam and detrimental to the ejector capacity, but any reduction below the designed pressure would not only reduce the efficiency but involves danger of instability and breakdown. When trouble is experienced, it is very often due to either low steam pressure or wet steam or to an obstructed nozzle or steam strainer. Such a condition is indicated by unstable operation or failure to obtain or maintain full vacuum.

(b) To start either of the twin ejectors:

1. Be sure that the air vent at atmosphere is free.

2. The condensate drains from the inter-and-after condensers must be free.

3. Open the valves to allow the water to be circulated through the inter-and-after condensers.

4. Open the steam inlet valve on the second stage ejector.

5. Open the valve between the first stage ejector and the condenser.

6. After maximum vacuum obtainable with second stage alone is reached open the steam valve to the first stage.

The condensate from the inter-condensers is drained back to the main condenser, thus providing an opportunity for the liberation of entrained air from the ejector condensate. The condensate outlet from the after-condenser should be connected to drain system or returned by pump or trap into the make-up supply or into the condenser.

1-G-4 PARALLEL OPERATION

(a) When it is desired to place one unit in parallel operation with another unit which is already operating on the line, the recommended procedure is as follows:

Step 1. Bring the unit up to normal no-load speed as outlined above in paragraph 1-G-2.

Step 2. With the speed changer regulate the speed to the synchronous speed of the system.

Step 3. Observe the synchroscope and manipulate the speed changer until synchronism is indicated.

Step 4. Throw the unit on the line.

Step 5. Re-adjust the speed changer until each unit takes its share of the load at the proper speed.

(b) The proper voltage to obtain before throwing one generator in parallel with the other, can be found best by trial. It may vary slightly from the line voltage, depending upon local conditions.

1-G-5 SHUTTING DOWN THE UNIT

(a) The recommended procedure for shutting down the unit is as follows:

Step 1. Reduce the load to practically zero by manipulating the speed changer.

Step 2. Throw off the load by opening the circuit breaker, and then finally the main generator switch.

Step 3. Close the turbine throttle valve by the manual operation of the handwheel. Note: The manual closing of the throttle valve stops the flow of all steam to the turbine but at the same time permits the main oil pump to continue in operation supplying oil to the journal and thrust bearings.

Step 4. Break vacuum by means of vacuum breaker.

Step 5. Shut off steam to glands.

Step 6. Shut down auxiliary air ejector.

Step 7. Shut off circulating cooling water to condenser.

Step 8. Shut down condensate pump.

Step 9. Open drains to throttle valve, steam manifold and steam inlet piping. Vent glands.

Step 10. Operate the auxiliary oil pump where oil pressure falls to 4 pounds or less, until the turbine rotor comes to rest. With the decreasing oil pressure, the low oil pressure alarm contact maker should function when the value of 4 psig is reached and at this time the auxiliary oil pump should be started.

Step 11. Shut down circulating pump, close valves in cooling water supply to oil cooler.

Step 12. Clean machine and place in readiness for reoperation.

1-G-6 OPERATION PRECAUTIONS

(a) The following operating precautions should be carefully observed:

Point 1 - Avoid passing steam through the turbine with the rotor at rest. With the throttle and steam chest closed the throttle valve drain should be open.

Point 2 - Avoid air being drawn through the glands with the rotor at rest.

Point 3 - Periodically, at monthly intervals inspect the overspeed trip weight to see that it works freely in the body. Test all safety devices to see that each one functions properly.

Point 4 - Keep the throttle valve and steam chest valve lifting rods clean. Do not under any circumstances paint these parts.

Point 5 - Keep bearing oil pressures between 7 and 10 pounds gauge.

Point 6 - Keep the oil level in the reservoir between the limits indicated on the oil level gauge.

Point 7 - Keep oil strainer clean.

Point 8 - Keep oil cooler clean.

Point 9 - When the unit is not operating, keep all switches open.

Point 10 - At the least sign of trouble, stop the unit immediately. Investigate and correct the trouble before re-starting the unit.

Point 11 - Once each week, where practicable, test the overspeed trip by actually overspeeding the unit as described in paragraph 1-D-5(a).

Point 12 - If for any reason the throttle valve is tripped, restoration of oil pressure under the throttle valve operating piston cannot be accomplished until the throttle valve handwheel has first been turned to the fully closed position and then reopened as described in Paragraph 1-B-16.

SECTION H—MAINTENANCE

1-H-1 INSPECTION

(a) About once each year, depending on the nature of the service, the unit should be dismantled and thoroughly inspected and cleaned. Erosion of the blades, nozzles and valves, wear of bearings (including the thrust bearing) and changes in clearances, are the main points to be inspected. The gear-case cover should be removed to permit inspection of the gear teeth. If the gear tooth wear is not well-distributed over the tooth surfaces, the parallelism of the pinion and gear bearings should be checked.

(b) The oil cooler, oil strainer, and steam strainer should be cleaned. All oil piping should be disconnected and thoroughly washed and cleaned. A light coat of shellac should be applied to the flange faces in making up the joints.

1-H-2 WEIGHTS

(a) The calculated, and for some items the actual weight of the principle parts of the unit which may require handling are given in the table below:

Name of Part	Pounds
Turbine Complete	4,736
Gear	3,626
Bedplate (actual weight)	2,160
Oil Cooler and Strainer (Dry)	320
Generator Complete	12,235
Exciter Complete (actual weight)	2,365
On Board Repair Parts (One Set)	1,433
Condenser (Dry) (actual weight)	9,255
Condenser (Operation)	10,952
Condenser (Flooded)	15,300
Air Ejector (Dry)	1,700
Air Ejector (Operating)	1,900
Air Ejector (Flooded)	2,200
Accessories	265
Oil Piping	327
Steam Gland and Drain Piping	66
Total Weight of Unit Dry (Actual Weight)	35,295
Total Weight of Unit (Operating)	37,792
Total Weight of Unit (Condenser Flooded)	42,140

1-H-3 ROTOR CLEARANCE DIAGRAM

(a) Figure T-25 shows the normal clearances and the clearance limits throughout the turbine. These clearances should be checked whenever an inspection of the turbine is being made.

1-H-4 ROTOR LIFTING DEVICE (FOR REMOVING BEARING SHELLS)

(a) In order that the turbine and pinion bearings may be examined or removed without the necessity of lifting the turbine-cylinder cover, two rotor-lifting yokes are furnished as shown in Figure T-26. By slipping these yokes into place as indicated in the Figure and applying pressure on the jackscrews, the rotor may be raised sufficiently so that the lower halves of the bearings may be rolled out for examination or replacement, the auto stop cover, steam chest servomotor mechanism and rotor position indicator first having been removed. Care should be taken when using these yokes to make sure that the rotor is raised just enough to take its weight off the bearings, because by the use of the jackscrews, the rotor might be lifted sufficiently to damage the thin seal-strips around the blading and dummy seals.

1-H-5 ROTOR LIFTING GEAR AND GUIDES

(a) Figure T-27 shows the arrangement of the rotor lifting gear and guides. The guides are bolted to the turbine cylinder base, one pair at each end. The guides serve to hold the rotor central when lifting and thus lessen the danger of damaging the blading. The lifting gear is fabricated from plate steel and pipe. The slings fit around the rotor as shown and then over the collars. The hanger is welded to the pipe at a point which balances the two ends and thus keeps the rotor level while it is being lifted.

1-H-6 JOINT SEALING

(a) The horizontal and vertical joints of the turbine cylinder are grooved, for filling with a joint sealing compound, in the event that at some future date the flanged joint shows signs of leakage. Tapped holes located around the flanges as shown in Figure T-30 are on the outside of the casing and are accessible upon removal of the lagging.

(b) To fill the grooves, remove one end plug and the adjacent plug; start at one end and in-

ject the sealing material with the gun provided, until it overflows through the adjacent hole. The first hole should now be plugged and the process repeated at the other holes until the entire groove has been filled. With the gun in the next to the last hole and the sealing material flowing from the end hole, plug the end hole and put pressure on the gun to fill the groove solidly and then promptly plug the last hole.

(c) This operation must be carried on rapidly and continuously to finish before the sealing material hardens. Clean the gun thoroughly and oil it before putting it away.

(d) Reference should be made to the BuShips Manual for an approved sealing compound.

1-H-7 AUXILIARY CONDENSER

(a) Unless the circulating water is badly contaminated, maintenance should be negligible. Most troubles arise from bad circulating water, over-treated or under-treated boiler water or both.

(b) Since the shell is a welded structure, air leaks, if any occur will probably be found at the valve stems or joint flanges. The preferred method of testing is to fill the condenser and turbine with water nearly to the turbine centerline and then check all doubtful points for water seepage, the water chamber access covers being removed so that all tube ends may be examined. Should any leaking tubes be found they may be plugged, re-rolled or repacked depending upon the nature of the leak, until it is convenient to have the tube replaced.

1-H-8 AIR EJECTORS

The design of these twin ejectors are such that should some difficulty arise, the stand-by unit may immediately be cut in service and the unit suffering the casualty cut out of service for examination.

Occasionally some foreign matter may become lodged in the nozzle, rendering it useless. Such a condition must, of course, be corrected by removing the foreign matter. The ejector nozzle is secured in the mixing chamber by being clamped down by the steam chest, into which it is screwed. A pipe plug in the steam chest provides access to the nozzle throat by the use of a piece of soft copper wire. If this will not serve, the steam chest and nozzle may be removed together and the obstruction backed out. If the nozzle gasket is damaged in the operation it must be replaced with one of like thickness. Too much stress cannot be laid on the importance of maintaining the proper distance between the nozzle outlet and the inlet of the diffuser. The correctness of this dimension is vital to the operation of the ejector.

1-H-9 TOOLS AND WRENCHES

(a) Special tools and wrenches are provided to facilitate the disassembly and reassembly of the units in case of overhaul or repair. Figure T-29 illustrates these tools so that the personnel may more readily identify them and choose the proper tool for each operation.

1-H-10 REPAIR PARTS

(a) The lists which face the illustrated figures in this book have been compiled to facilitate ordering additional spare or repair parts by name and number. Whenever parts are ordered, it is of utmost importance to give the Serial Number of the turbine on which the parts are to be used.

(b) A complete list of the spare or repair parts as supplied with the original equipment are listed in Figures T-33 and T-34.

SECTION I—REPAIR PARTS AND BASIC PLAN LIST

1-1-1 REPAIR PARTS

The various repair parts supplied for this unit, are listed in the Figures T-33 and T-34. All those parts which apply to the Turbine, Reduction Gear and associated mechanisms are shown in Figure T-33. All those parts which apply to the condensing equipment and associated mechanisms are shown in Figure T-34.

Before ordering repair parts consult drawings shown in Figures T-35 and T-36, the Manufacturer's Machinery Variations for CVA 63 and CVA 64.

1-1-2 BASIC PLAN LISTS

	Westinghouse Electric Corporation	BuShips
Plan List, Turbine	1-JH-5061	CVA-63-201-H-1703622
Plan List, Condenser	908-D-929	CVA-63-300-D-1738391

TURBINE, REDUCTION GEAR AND CONDENSING EQUIPMENT

General Index

Index	Paragraph	Page
Air Ejectors, Two Stage	1-E-2,1-H-8	125,133
Alignment of Generator	1-F-2	127
Alignment of Reduction Gear	1-F-2	128
Alignment of Unit	1-F-1	127
Application, General	1-A-1	101
Atmosphere Relief Valve	1-D-4	121
Auxiliary Air Ejectors, Two Stage	1-E-2	125
Auxiliary Air Ejector Data	1-A-7	103
Auxiliary Condenser	1-E-1,1-H-7	124,133
Auxiliary Condenser Data	1-A-6	103
Auxiliary Oil Pump	1-C-8	117
Back Pressure Trip Mechanism	1-D-2	120
Basic Plan Lists	1-I-1	134
Bearing, Loads and Pressures	1-A-5	102
Bearing, Turbine, Combined Thrust and Journal	1-B-10	108
Bearing, Pinion and Gear	1-C-3	115
Blading, Impulse, Curtis Stage	1-B-5	106
Blading, Impulse, Rateau Stage	1-B-6	106
By-pass Valve, Oil Cooler	1-C-9	117
Capacity, Oil System	1-A-4	101
Characteristics	---	101
Condenser, Auxiliary	1-E-1	124
Condenser Data, Auxiliary	1-A-6	103
Condenser Maintenance, Auxiliary	1-H-7	133
Condensing Equipment	---	124
Clearances, Rotor	1-H-3	132
Curtis Wheel Chamber Labyrinth Seals	1-B-8	107
Cylinder, Joint Sealing	1-H-6	132
Cylinders, Turbine	1-B-2	105
Description of Reduction Gear and Accessories	---	115
Description of Turbine and Accessories	---	105
Ejector Data, Auxiliary Air	1-A-7	103
Ejectors, Two-Stage Air	1-E-2	125
Ejector Maintenance, Air	1-H-8	133
Gear Bearings, Pinion and	1-C-3	115
General Application	1-A-1	101
General Description of Reduction Gear	1-C-1	115
Glands, Turbine	1-B-9	107
Governor Speed Changer	1-B-20	114
Governor and Steam Chest Servo-Motor Mechanism	1-B-19	111

Turbine Equipment General Index — Continued

Index	Paragraph	Page
Governor and Oil Pump Drive Assembly	1-C-6	116
Impulse Blading, Curtis Stage	1-B-5	106
Impulse Blading, Rateau Stage	1-B-6	106
Inspection	1-H-6	132
Installation of Unit	---	127
Interstage Diaphragm Seals	1-B-7	107
Joint Sealing	1-H-6	132
Loads, Bearing, and Pressures	1-A-5	102
Low Oil Pressure Alarm Contact Maker	1-D-3	120
Lubricating Oil	1-C-11	119
Main Oil Pump	1-C-7	117
Maintenance	---	132
Maintenance, Auxiliary Air Ejector	1-H-8	133
Maintenance Auxiliary Condenser	1-H-7	133
Manual Trip	1-D-1	120
Nozzle Block, Turbine	1-B-4	106
Oil Cooler, Strainer and By-pass Valve	1-C-9	117
Oil Cooler By-pass Valve	1-C-9	117
Oil Lubricating	1-C-11	118
Oil Pump, Auxiliary	1-C-8	117
Oil Pump Drive Assembly, Governor and	1-C-6	116
Oil Pump, Main	1-C-7	177
Oil Seal Ring	1-B-11	109
Oil Sprays, Pinion and Gear	1-C-5	116
Oil Strainer	1-C-9	117
Oil System	1-C-10	118
Oil System Capacity	1-A-4	101
Operation	---	129
Operation, General	1-G-1	129
Operation, Parallel	1-G-4	130
Operation, Precautions	1-G-6	131
Overspeed Trip and Manual Trip Mechanism.	1-D-1	120
Parallel Operation	1-G-4	130
Pinion and Gear Bearings	1-C-3	115
Pinion and Gear Sprays	1-C-5	116
Pipe Connections	1-F-3	128
Precautions, Operation	1-G-6	131
Pressures, Bearing	1-A-5	102
Ratings, Gear	1-A-3	101
Ratings, Turbine	1-A-2	101
Reduction Gear Characteristics	---	101
Reduction Gear, General Description	1-C-1	115
Reduction Gear Ratings	1-A-3	101
Relief Valve, Atmosphere	1-D-4	121
Repair Parts	1-H-10,1-I-1	133,134

Turbine Equipment General Index — Continued

Index	Paragraph	Page
Repair Parts, Machinery Variations	1-I-1	134
Rotating Elements, Reduction Gear	1-C-2	115
Rotor Clearance Diagram	1-H-3	132
Rotor Lifting Gear and Guides	1-H-5	132
Rotor Lifting Gear (for Removing Bearing Shells)	1-H-4	132
Rotor Position Indicator	1-B-14	109
Rotor, Turbine	1-B-3	106
Safety Devices	---	120
Safety Devices, Testing of	1-D-5	121
Seal Ring, Turbine Oil	1-B-11	109
Seal Rings, Reduction Gear Oil	1-C-4	116
Seals, Curtis Wheel Chamber Labyrinth	1-B-8	107
Seals, Interstage Diaphragm	1-B-7	107
Seals, Turbine Gland	1-B-9	107
Setting of Turbine Rotor	1-F-1	127
Shutting Down the Unit	1-G-5	130
Speed Changer, Governor	1-B-20	114
Sprays, Pinion and Gear Oil	1-C-5	116
Starting Auxiliary Air Ejectors	1-G-3	130
Starting the Unit	1-G-2	129
Steam Chest	1-B-17	110
Steam Chest Servo-Motor Mechanism	1-B-19	111
Steam Chest Valve Settings	1-B-18	111
Steam Gland and Drain System	1-B-12	109
Steam Seal Manifold	1-B-13	109
Steam Strainer	1-B-15	110
Tachometer	1-C-12	119
Testing of Safety Devices	1-D-5	121
Throttle Valve	1-B-16	110
Thrust Bearing Turbine	1-B-10	108
Tools	1-H-9	133
Turbine Characteristics	---	101
Turbine Glands	1-B-9	107
Turbine, General Description	1-B-1	105
Turbine, Ratings	1-A-2	101
Turbine Rotor	1-B-3	106
Valve Setting, Steam Chest	1-B-18	111
Weights	1-H-2	132
Wrenches	1-H-9	133

CHAPTER 2—A-C GENERATOR

TABLE OF CONTENTS

Description	Page
SEC. 1 - DESCRIPTION OF GENERATOR	201
General Information	201
Purpose	201
Machine Identification and Data	201
Generator Classification	201
Generator Test Data	201
Nameplate Data	203
Description of Apparatus	203
Illustrations	203
General Arrangement	203
Frame	203
End Bells and Enclosing Covers	203
Air Cooler	203
Bearing	205
Core	205
Armature (Stator) Winding	205
Shaft and Spider	205
Field Poles	206
Lower Coil Support, Balance Weights and Blowers	206
Field (Rotor) Winding	206
Collector	206
Brush Rigging and Brushes	206
Mechanical Rotation	206
Phase Rotation	206
Short Circuit Currents	206
Air Seal	207
Armature and Field Leads	207
Space Heaters	207
Stator Temperature Detectors	207
Air Temperature Relay	207
Ventilation and Cooling	207
Spare Parts	207
SEC. 2 - INSTALLATION OF GENERATOR	208
Storage	208
Handling and Packing	208
Installation and Erection	208
General	208
Examination of Bearing and Journal	208
Cleaning Collector Rings	208
Alignment of Equipment	208
SEC. 3 - OPERATION OF GENERATOR	210
Starting	210
Brush Adjustment	210
Initial Check on Insulation Resistance	210
Drying-Out Windings	210
Final Check before First Start	211
Starting Generator	212
Check During First Start	212
Starting Single Generator Unit	212
Paralleled Generators	212

TABLE OF CONTENTS — Continued

Description	Page
Explanation of Synchronizing Lamp Circuits	213
Determining Proper Phase Sequence	213
Synchronizing Generators With Lamps	214
Synchronizing Generators With A Synchroscope	214
Operation of A-C Generators	215
Single Generator	215
Parallel Generators	215
Shutting Down of A-C Generator	216
Removing Generator From Service	216
Routine Shutdown	216
Extended Shutdown	216
SEC. 4 - MAINTENANCE OF GENERATOR	217
General Maintenance	217
Temperature	217
Possible Sources of Collector and Brush Trouble	217
Corrective Maintenance	218
Insulation Resistance	218
Annual Inspection	220
Cleaning Generator	220
Ordering Renewal Parts	220
Communications	220
Dismantling The Generator	221
To Remove Rototrol-Exciter Stator and Rotor	221
To Remove Bearing and Pedestal	221
To Remove Enclosing Covers and Cooler	221
To Remove Rotor	222
To Remove Stator	222
Reassembling Generator and Rototrol-Exciter	222
To Re-assemble Stator and Rotor	222
To Replace Pedestal and Bearing and Couple to Speed Reduction Gear	222
To Replace End Bells and Enclosing Covers	223
To Replace Exciter Stator and Rotor	223
Removal and Replacement of Generator Coils	223
Removal of Stator Coils	223
Replacement of Stator Coils	223
Removal of Rotor Coils	224
Replacement of Rotor Coils	224
Emergency Repair Measures	225
Rebabbitting Bearings	225
Repair of Air Cooler	225
SEC. 5 - GENERATOR AIR COOLER	226
Installation of Air Cooler	226
Operation of Air Cooler	226
Maintenance of Air Cooler	226
Cleaning of Air Cooler	226

LIST OF ILLUSTRATIONS

Figure	Title	Page
G-1	Photograph of Generator and Exciter Completely Assembled	202
G-2	Photograph of Generator Stator	204
G-3	Photograph of Generator Rotor	204
G-4	Connections for Drying-out Windings with DC Welder	211
G-5	Typical Behavior of Insulation Resistance during Dry-out Run	211
G-6	Connections for Synchronizing 3 Phase Generators	213
G-7	Synchroscope	214
G-8	Diagram of Connections for Measuring Insulation Resistance	219
G-9	Outline and Section	Tab 1
G-10	Coils, Insulation, Bearings and Specifications	Tab 2
G-11	Strap Field Coil Winding and Insulation Data, Class B	Tab 3
G-12	Stator Coil Insulation Data, Class B	Tab 4
G-13	Certification Data	Tab 5
G-14	Factory Test Data	Tab 6
G-15	Generator Air Cooler Assembly	Tab 7

NOTE

See Figs. G-9A and G-9B for pole and field alterations to AC Generators, CVA 63 only.

CHAPTER 2
SHIPS SERVICE A-C GENERATOR

SECTION 1—DESCRIPTION OF GENERATOR

GENERAL INFORMATION

Purpose

These instructions are intended to describe the construction and to guide in the installation, operation and maintenance of the ship's service generators.

Machine Identification and Data
Rating (Fig. G-10)

These generators are rated 1500 KW (1875 Kv-a) 80% power factor, 450 volts, 2400 amperes, 3 Phase, 60 cycles, 1200 RPM, excitation 125 volts, 149 amperes d-c; temperature rise for rated continuous load per Table I.

Generator Classification (Fig. G-10)

(a) Reference Ambient Temperature: 50°C

(b) Table and Method of Measuring Temperature Rise: Table I

(c) Class of Insulation: Class B

(d) Degree of Enclosure: Totally enclosed with heat exchanger.

(e) Method of Cooling: Self-Ventilated

(f) Manufacturer's Type Designation: Special 6-44-1/2-19-1/2

(g) Means of Excitation: 125 volt, 1200 RPM, direct current, ROTOTROL type, Ship's Service Generator-Exciter, which is direct connected to main shaft.

(h) Prime Mover: Steam turbine via speed decreasing gear.

Generator Test Data

Factory test data are furnished at the close of these instructions.

TABLE I

Item	TEMPERATURE RISE-DEGREES CENTIGRADE		
	By Thermometer	By Resistance	By Detector
Armature Windings	60	70	70
Insulated Field Windings	60	70	--
Collector Rings	75	--	--
Bearings	30	--	--
Cores and Mechanical Parts in Contact with or Adjacent to Insulation	60	--	--

The calculated performance table from drawing 1-JH-2802 is given in Table II.

TABLE II

Load	KW	P.F.	Kv-A	Amps	D-C EXCITATION		
					Amps	Volts	KW
50% cont.	750	.80	937.5	1200	108.5	58.1	6.3
75% cont.	1125	.80	1406	1800	126.3	60.9	7.7
100% cont.	1500	.80	1875	2400	144	69.4	9.99
150% 5 min.	1406	.50	2810	3600	201	96.9	19.48

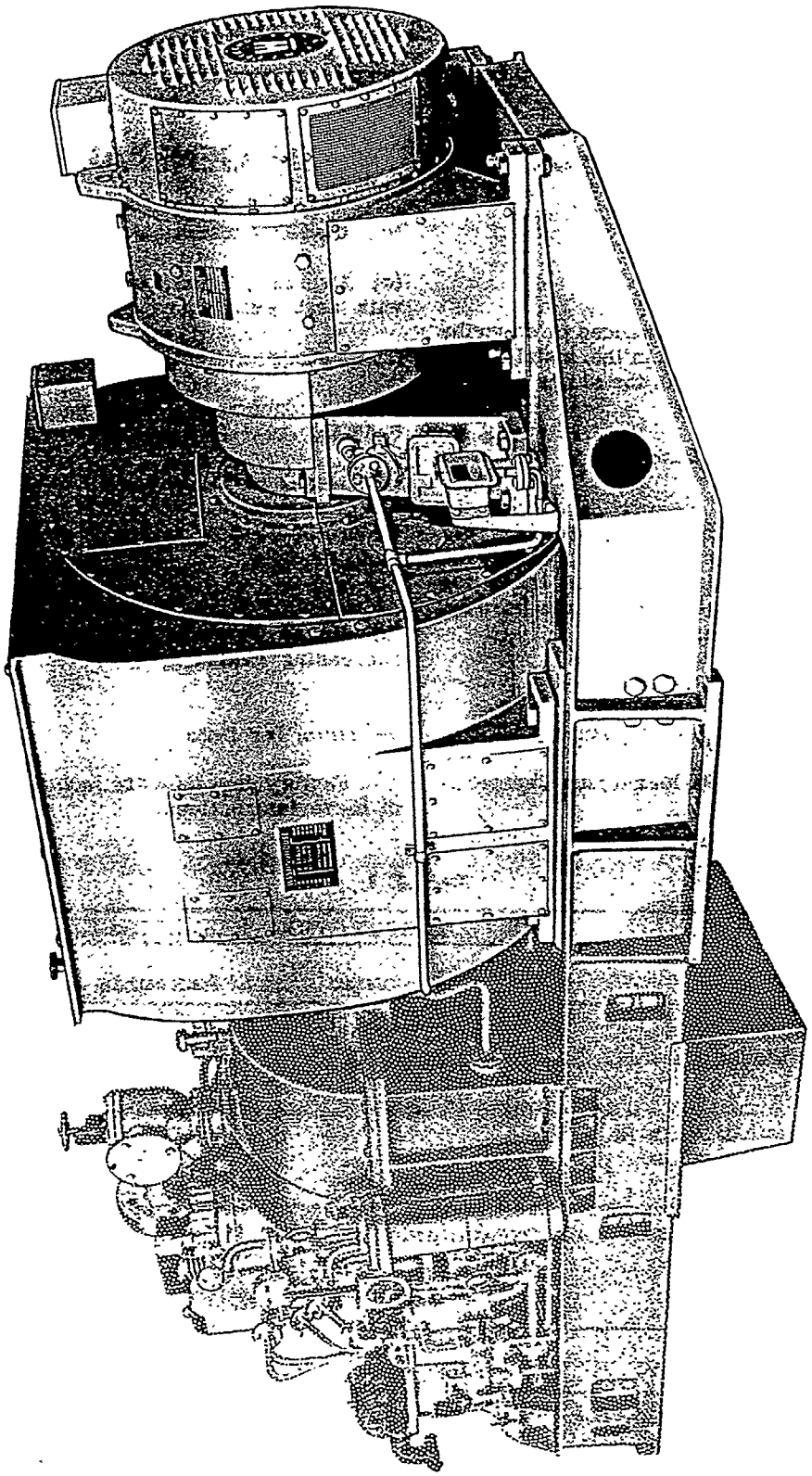

FIG. G-1—Turbine, Gear, Generator and Rototrol-Exciter

Nameplate Data

1500 Kw (1875 Kv-a)
450 Volts
80% power factor
3 phase
1200 RPM
125 Exciting Volts
149 Exciting Amperes

It is recommended that the nameplate readings of the new equipment be reviewed and office copies of these readings be made available. This information will be found useful in subsequent correspondence on the equipment.

Always refer to the serial number stamped on the nameplate of the machine when corresponding with the manufacturer for this is the number which identifies the machine.

DESCRIPTION OF APPARATUS

Illustrations

Reference to the drawings, Figures G-9 to G-16 will be found useful in supplementing the following description.

General Arrangement
(Fig. G-9)

The generator unit consists of the steam turbine, speed decreasing gear, a-c generator, and the direct connected d-c ROTOTROL (exciter). Separate instructions are furnished for the ROTOTROL exciter. See Chapter 3.

The a-c generator is coupled to the speed decreasing gear by a forged flange coupling at the rear end. The shaft is supported at the other end of the a-c machine by a pedestal type bearing. The stator frame is mounted on the sub-base. The exciter rotor is overhung on the shaft. The exciter stator is mounted on the sub-base.

Frame
(Fig. G-9)

The enclosed box-type frame in fabricated from hot rolled steel members. Heavy steel-slab feet, welded to the lower portion of the frame rings, insure rigid attachment of the generator to the sub-base. These feet are situated parallel to the shaft and are drilled for holding down bolts and jackscrews. Lifting bars, welded inside the frame cover, facilitate lifting of the frame.

The stator-core laminations are stamped from special silicon steel. They are stacked on transverse bolts and are clamped between the steel frame rings. Ventilating spaces are provided by fingerplate spacers permitting air to circulate through the core. Terminals of the armature are brought out to straps at the side of the frame.

End Bells and Enclosing Covers
(Fig. G-9)

Covers and air shields which are bolted and welded to the frame parts enclose and direct the ventilating air and protect the armature windings. The rear cover is split on the horizontal centerline. The air cooler housing directs the air from the cooler into each end of the frame for re-entrance to the machine.

Removable covers at each end of the machine provide access for air gap measurement and inspection. Elongated holes are located in the air shield portion of the end bells in line with these cover plates. Three drains with plugs are located at the lowest part of the frame.

Air Cooler
(Fig. G-15)

The air cooler for the a-c generator is located at the top of the generator frame. It is a double-tube type of cooler furnished by the Harrison Radiator Division of the General Motors Corporation.

The purpose of the double-tube construction is to enable leaks in the water tubes to be detected before serious failure of a tube occurs. Each double tube consists of water-carrying tube surrounded by a close-fitting outer tube. Axial grooves in the inside surface of the outer tube extend the full length of the cooler.

The grooves in the outer tubes all open into "tell-tale" chambers at each end of the cooler. When a leak occurs in the main water-carrying tube, the leakage runs into the grooves in the surrounding tube, and from there it runs into one of the chambers mentioned. This arrangement is designed to prevent water leakage into the air ducts and generator. Leakage can be detected only if the lower-most drain is open permanently to permit the leakage from the "tell-tale" chamber to be observed.

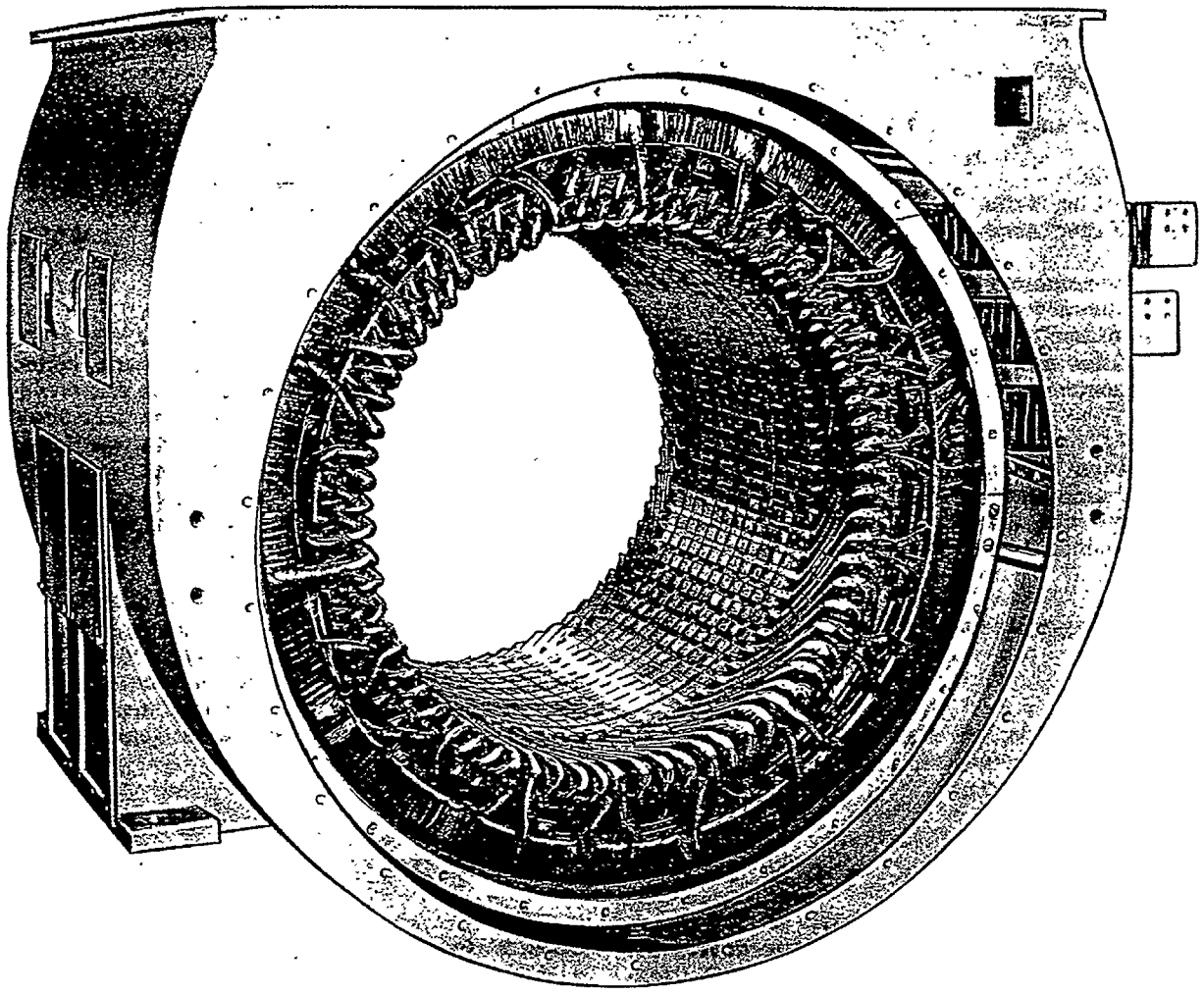

FIG. G-2 — Generator Stator

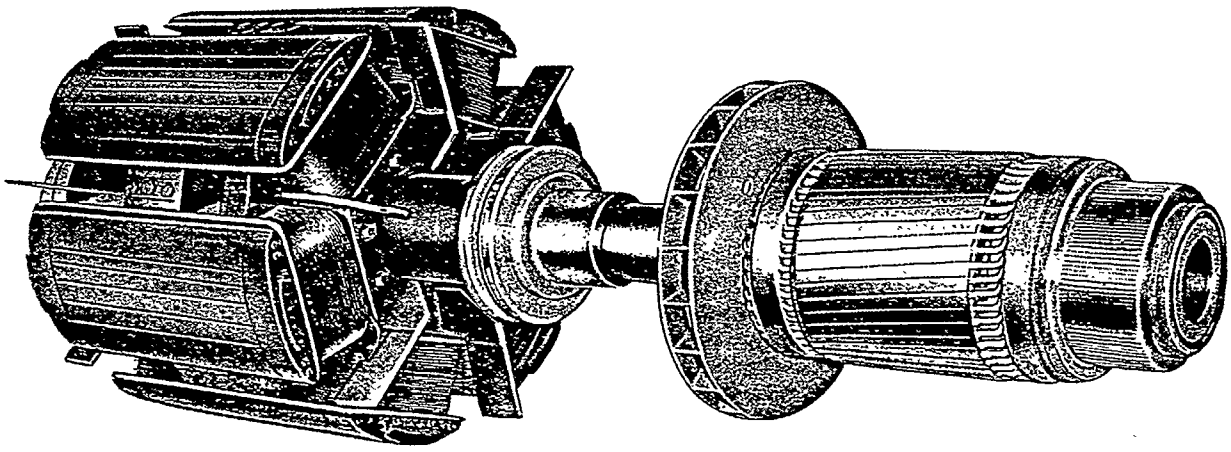

FIG. G-3 — Generator Rotor

The air cooler requires 60 gpm of cooling water at a temperature not exceeding 85°F.

Bearing
(Fig. G-9 and G-10)

The shaft is supported by a pedestal type split-sleeve insulated bearing at the collector end. The other end is supported by the speed reduction gear. The bearing insulation provides protection against bearing currents. The bearing is split horizontally and consists of an upper and lower cast steel shell lined with babbitt. Lubrication is provided by the forced feed system of the prime mover. A fixed orifice at the bearing inlet supplied with the generator by the generator builder limits the oil flow through the bearing to 1-1/2 gallon per minute at a pressure of approximately 5 psi.

In addition to oil throwers machined on the shaft, front and rear oil seals are provided to prevent leakage of oil along the shaft, and to prevent entrance of dust and dirt into the bearing. Each seal consists of two semi-circular steel rings having copper seal and look strips on their inner periphery, bolted to the bracket. The small clearance between the shaft and the inner periphery of the seal prevents leakage of oil along the shaft away from the bearing. Standard Navy type flanges are provided for the oil inlet and drain connections.

Core
(Fig. G-9)

The core of the machine is built up of circular, segmental laminations of silicon steel stacked on twelve transverse studs. Each circular lamination consists of six segments. Ventilating spaces are formed between the frame rings and the ends of the core by finger plate spacers, and between the packages of punchings by vent plate spacers at all positions along the length of the core. This arrangement furnishes a means for dissipating heat from the core by permitting cooling air to enter the inner portion of the core. The laminations are insulated from one another with a surface coating of sodium silicate (water glass). Finger plates at each end of the core prevent loosening of the teeth. After the punchings are stacked in the machine, they are compressed to the proper core length, and the frame rings are welded in place to hold the armature core firmly in the frame. The stator punchings have 82 slots each having a finished size, after stacking, of 0.525" wide by 2.325" deep.

Armature (Stator) Winding
(Figs. G-10 and G-12)

Tabulation of Winding

Coil Grouping: 4 Coils per Group
1 Group per Pole per Phase - 3 Groups per Pole - 18 Groups Total 72 Coils
Throw of Coils: Slots 1 to 10 -
6 Poles - 3 Phase - 6 Parallels - Delta

The stationary armature has a bore of 31.5" and has 72 slots, each of which has a finished size of 0.525" wide by 2.325" deep. The armature coil is of the diamond type and consists of 4 conductors, each of which is two strands wide by two strands deep of double-glass-covered copper wire. The strands are .102" thick; and .204" wide. The weight of one coil is approximately 9.5 pounds.

Each of the straight sides of the coil is insulated with one and one-half turns of a .010 inch thick Glasweve and mica wrapper. The end portions of the coil are insulated by hand taping with one layer of half-overlapped .007 inch thick glass-backed mica tape. The coil is finished all over with one half-overlapped layer of .005 inch thick, Glasweve tape. The finished coil is impregnated with a heat-reactive varnish by the vacuum-and-pressure method.

The coils are placed directly in the slots without slot calls. Glass-Melamine-Micarta wedges are used to hold the coils in place in the slots. The coils are roped to an insulated steel ring at each end of the winding to prevent distortion of the end turns in case of short-circuit.

The assembled stator is treated twice in a moisture-and-oil resistant varnish.

Shaft and Spider
(Fig. G-9)

The rotor shaft is machined from a solid steel forging. An integral flange is provided on the rear end for coupling to the speed reduction gear. The front end of the shaft is machined to receive the quill of the exciter rotor. The spider which carries the field poles is built up of steel laminations riveted together, the assembly being pressed on and keyed to the shaft. The spider laminations are punched with dovetail slots for mounting the field poles.

Field Poles
(Fig. G-9)

The six poles are constructed of laminated steel punchings which are securely bound together by through rivets. Each field pole is fastened to the spider by a dovetail, which is held in place by two tapered keys. The dovetails are prevented from buckling by a weld extending the full length of each dovetail.

The brass upper coil support is held to the pole by studs.

Lower Coil Support, Balance Weights and Blowers
(Fig. G-9)

The lower coil supports and blowers are made of steel angle and sheet and are bolted to the spider assembly at the centerline between the poles. Elongated bolt holes in the lower coil supports permit the position of the supports to be adjusted. Balance weights are placed under the heads of the bolts which hold the lower coil support to the spider.

Field (Rotor) Winding
(Figs. G-9 and G-11)

Each open field coil consists of 82 turns of .032 x 2" and 29 turns of .047 x 2" edge-wound bare copper strap. The dimensions of the uninsulated coil are 6.845" in width by 20-1/2" in length with a radius of 1-1/8" at the corners. Starting with the 4th turn from the top, the end section has every 4th turn extended 1/2" beyond the normal position. After the bare copper is formed, the coil is insulated as described on Figure G-11. The lower part of the side section of the coil is machined to the dimensions shown on Figure G-10, and the center section of the lower portion of the side of the coil is machined to give clearance for the coil brace bolts.

The coil is assembled on the pole with glass-melamine washers, and after assembly it is treated four times in moisture and oil-resisting varnish.

Each coil is secured in its position on the pole by the upper and lower coil supports. The upper coil supports are made from brass, and they are held to the pole by studs. The lower coil supports are made from steel angle and are bolted to the spider. The holes for the bolts are elongated to allow for adjustment of the lower coil support. It is pressed against the coil as tightly as possible during assembly.

Collector
(Fig. G-9)

The collector assembly is pressed on the shaft between the spider and the journal. It consists of two helically grooved bronze collector rings shrunk onto a length of steel bushing around which a sleeve of mica has been built up with the entire bushing used as a mandrel. Two copper studs, one threaded into each ring pass through glass melamine insulating tubes connecting the rings to their respective field leads. The surface of each collector ring is machined with a helical groove to improve brush performance.

The collector assembly is held in place on the shaft by a light press fit and three set screws inserted into a groove in the shaft so as to prevent both rotational and axial movement.

Brush Rigging and Brushes
(Figs. G-9 and G-10)

The four brushholders are supported on two insulated steel studs mounted from the pedestal. The part of the stud which screws into the pedestal is eccentric from the part which the brushholders mount from so that the distance of the brushholders from the collector ring may be adjusted by turning the stud. A lock nut secures the stud in position. Each brushholder contains two brushes 3/4" wide by 1-1/2" thick by 2" long. Each generator requires eight brushes. The brushes are grade WH4 - Navy grade H per 17B8. For replacement brushes, order Style #1593190.

Mechanical Rotation
(Fig. G-9)

The rotation of the generator is clockwise as viewed from the collector end.

Phase Rotation
(Fig. G-10)

When the mechanical rotation of the generator is clockwise as viewed from the collector end, the emf's induced in the phases will reach positive maximum values in the following manner:

$$T_1 - T_2 - T_3$$

Short Circuit Currents
(Fig. G-10)

The sustained short circuit current per phase is calculated to be approximately as follows:

(1) With the regulator in operation 10770 amperes
(2) Without the regulator in operation 4780 amperes and full load field excitation.

The symmetrical RMS short-circuit current is calculated to be approximately 26,500 amperes for the first half cycle.

The windings are designed to withstand the stresses incident to short-circuits when the machine is operated at full load and at rated voltage and power factor.

Air Seal
(Fig. G-9)

At the rear end of the generator a brass seal ring having a small clearance between it and the shaft coupling prevents mingling of the outside air with the cooling air of the machine's recirculating ventilation system.

Armature and Field Leads
(Figs. G-9 and G 13)

The armature leads are made of copper strap and are brought out at the side of the generator frame. Solderless terminals are provided as indicated on the certification data dwg.

The field leads consist of jumper cables which connect the brushholders to the exciter terminals. Except for metering leads brought out at the exciter terminal box. There are no external connections to the generator field and no terminals are required, since the generator field leads M_1 and M_2 connect directly to the exciter armature leads A_1 and A_2.

Space Heaters
(Figs. G-9, G-10 and G-13)

Eight 250 watt, tubular-type space heaters are located on the lower part of the frame inside the machine. The heaters are all connected in parallel for operation from a 115-volt power supply. The leads are brought out to the terminal board located on the right-hand side of the generator frame as viewed from the collector end. A removable cover plate provides access to the space heater terminal board. From there the space heater leads leave the generator through a conduit. See the Certification Data drawing for the size of the conduit.

Stator Temperature Detectors
(Figs. G-9, G-10 and G-13)

The temperature detectors consist of ten-ohm resistance coils embedded between the upper and lower coil sides in the stator slots. The six detectors are equally spaced around the circumference of the generator. The connections are shown on Figure G-10. The leads are brought out to the terminal board with conduit connection at the right hand side of generator frame as viewed from the collector end. Refer to the Certification Data drawing for the size of the conduit.

Air Temperature Relay
(Figs. G-9 and G-13)

An air temperature alarm contact maker is located in the discharge air stream at the side of the frame. The relay is set to close on rising temperature at 85°C (185°F). Conduit may be connected to the box of the relay. Refer to the Certification Data drawing for the size of the conduit.

Ventilation and Cooling
(Fig. G-9)

The generator is ventilated with air circulated through the machine by the combined blowing action of the field poles and blower blades. The blades are located at each end of the rotor and are shrouded by the inner end bells.

Air from the outer end bells is drawn axially into each end of the machine near the shaft. Part of the air ventilates the end turns of the stator coils and passes,through openings through the finger plates, into the space between the stator core and the frame cover. The remainder of the air enters the space between the field poles, crosses the air gap, and flows radially through the stator vent ducts into this same space behind the stator core. From there, all the air is directed into the air cooler through an opening at the top of the generator frame. After passing through the cooler, the air is returned to the generator through ducts which are integral parts of the frame.

The air cooler requires 60 gpm of water having a temperature of 85°F, when the generator is carrying full rated load.

Spare Parts
(Fig. G-13)

The spare parts furnished for the a-c generators are given on the Lists of Spare Parts and Tools, Figure G-13. These lists are included at the close of these instructions, and they indicate whether the items are to be stored on shipboard or ashore.

SECTION 2—INSTALLATION OF GENERATOR

STORAGE

The generator is shipped with the windings well protected from moisture. At the destination, the rotor and stator should be placed in locations protected from the weather and from mechanical injury. Rain, snow, water or steam from leaking pipes, or condensation from the atmosphere should be excluded. It is particularly important to keep the windings dry for moisture lowers the insulation resistance and increases the likelihood of a breakdown. If the machine is brought from cold surroundings into a warm room, it should be kept covered until its temperature has risen to room temperature in order to prevent the condensation of moisture on the windings and other parts.

When storage over a period of time is anticipated, the machine should be completely enclosed by a tarpaulin or a covering of wood, metal or roofing paper unless the machine is in a protected location.

HANDLING AND PACKING

It is easily possible, by rough handling or careless use of bars or hooks, to do more damage to a machine before or during erection than would be done in years of regular service.

Care should be taken in transporting and handling the machines to see that the windings are not damaged. A blow upon any part of the windings is likely to injure the insulation and result in the burning out of a coil.

Lifting the parts of the generator set should be done with the greatest possible care. The a-c-generator is provided with lifting holes at the sides of the frame, and the bearing caps are equipped with eyes for lifting. The bottom of the air gap of the a-c machine should be shimmed in order to hold the rotor in position when both the stator and rotor of the machine are lifted together.

In lifting the rotor, it is preferable to use rope slings looped around the shaft. If chains are used, they should not be looped around the journals unless the latter are properly protected. In no case should the ropes or chains be allowed to exert pressure on the windings or collector rings.

INSTALLATION AND ERECTION

The instructions included for assembly and disassembly of the generator unit are intended to supplement the erection instructions furnished with the turbine and speed reduction gear. Satisfactory performance of the generator unit cannot be obtained when the unit is improperly aligned with the speed reduction gear.

GENERAL

The principal external dimensions of the generator set and the provisions for mounting it on the turbine sub-base are shown on the Outline and Section Drawing 1-JH-2801 which appears as Figure G-9 of these instructions.

EXAMINATION OF BEARING AND JOURNAL

Before the machine is installed, the surface of the bearing and journal should be examined for injuries accidentally sustained during or after shipment. Scratches on the surface of the babbitt should be smoothed out, and scratches or rust on the journal should be polished off before the machine is assembled.

CLEANING COLLECTOR RINGS

Remove the protective compound covering the collector rings. A cloth dipped in benzine (or other solvent) will be useful in removing this compound.

ALIGNMENT OF EQUIPMENT

When the a-c generator and exciter have been approximately located on the turbine sub-base, with the rotor in the machine and the coupling loosely fitted, the final alignment should be undertaken.

Care must be taken in locating the position of the generator frame axially on the sub-base so as to be sure that the journal is centered axially in the bearing. This may be checked when the top half of the bracket and top half of the bearing shell is removed.

The fit at the face of the coupling is the guide for alignment of the rotating parts with the reduction gear. The bearing cap should be removed so that the bearing can align itself

properly in the pedestal. Liners should be inserted under the pedestal feet as needed to cause the faces of the coupling to fit together as specified in the instructions for the turbine and gear. The coupling bolts should then be tightened.

The position of the generator stator should be adjusted so that the following conditions are met after the frame feet bolts are pulled tight.

1. The proper axial clearance exists at the journal between the journal oil throwers and the bearing. The clearances at the ends of the bearing should be such that they will be approximately equal after the coupling bolts are tightened.

2. The air gaps are equal around the bore within 1/64". It is particularly important that the air gap between the armature core and the pole faces be uniform, for any inequality in the gap will cause unnecessary friction and heating in the bearings as well as unequal heating of the iron in the armature core.

During these adjustments, the air gap should be gaged from both ends of the machine at different points around the rotor. Gages for the purpose should extend to the center of the core.

The feeler gage should be inserted along the core between poles and then moved over into the space between the pole face and the stator core. This procedure reduces the likelihood of reading too small a value for the air gap at a point near the end of the machine where a high punching is most likely to exist.

If accurate readings of the air gap are required, the varnish should be removed from both the rotor and stator punchings at the air gap surface.

3. The coupling outage is less than .001" as measured at the flange with a dial indicator after the coupling bolts have been tightened. The presence of burrs, nicks, or other results of poor handling will be noticed in this check.

4. Refer to the Rototrol instructions for description of special electrical adjustment of the Rototrol exciter air gap.

When the proper alignment of all parts is obtained, ream holding down bolt holes and install bolts.

SECTION 3—OPERATION OF GENERATOR

STARTING

Brush Adjustment

Brushes and brushholders should be examined before the machine is started up to make sure that the brushes are in the proper position, that there is a proper fit between the collector and the brushes, and that the brushes are free in the holder. If the faces of the brushes do not conform to the curvature of the collector, it is necessary to grind them to shape.. This operation is always required when new brushes are installed.

When fitting new brushes or damaged brushes, the operator should use sandpaper "Grade 1-1/2" for the roughing out and "Grade O" for the final fitting. The sandpaper should be drawn in the direction of rotation under the brushes. Rounding of the brush edges can be avoided by releasing pressure as the paper is drawn back and by being careful to keep the ends of the paper as close to the collector as possible. Each brush should be treated in turn, and it will be found that by this means a satisfactory contact is quickly secured.

The brushholders should be adjusted so that they are 1/8" from the collector rings.

An initial brush pressure of 2-1/2 psi or 2 pounds-5 ounces is recommended. Once the machine is in service, the pressure may be altered as necessary.

Initial Check on Insulation Resistance

The insulation resistance of an electrical machine gives an indication of whether the machine is in a suitable condition for operation or potential tests. If the insulation resistance of a winding is below the minimum acceptable value for a new machine, the winding should be dried out.

Once the windings are in a satisfactory condition for operation, it is recommended that initial readings be taken for both the armature and field windings so as to provide a basis for later comparison.

Further information on insulation resistance is given under the general heading "Maintenance", following.

Drying-Out Windings

If the insulation resistance indicates that the windings have absorbed moisture during shipment, the generator should be dried out before any high potential test is made or before the generator is initially run. Once the windings have been dried out, the space heaters should be placed in operation whenever the machine is not running. The windings may be dried either by the use of external heat or by the circulation of current through the windings themselves.

When external heat is to be applied, it is advisable to use resistance heaters or steam coils as sources of heat. The space heaters located inside of the generator are not of sufficient capacity for use in drying out the machine; so additional heaters are required. The space heaters may be used as supplementary sources of heat. The machine should be covered, and the heaters should be placed near the bottom of the enclosure. Care should be taken to protect the machine against direct radiation from the heaters. Effective drying cannot be accomplished unless means are provided to circulate the air so as to remove the moisture. The circulation of heated air can be improved by the following:

1. Forcing air into the bottom of the enclosure with small fans.

2. Having the enclosure sufficiently close-fitting to cause most of the heated air to pass through the ventilating spaces in the machine.

3. Providing an opening at the top of the enclosure for the escape of moisture-laden air.

When the heating is to be accomplished by the circulation of current, a d-c welding set may be used to provide the current. The current in any part of the winding should not exceed the rated value. Refer to Fig. G-4.

Another method of circulating current through the armature windings of the generator without subjecting them to full voltage is to drive the machine at a convenient speed with the armature windings short-circuited and with the proper value of excitation applied to the field to give somewhat less than rated armature current.

Regardless of the method of heating used, it is essential that the heat be brought up grad-

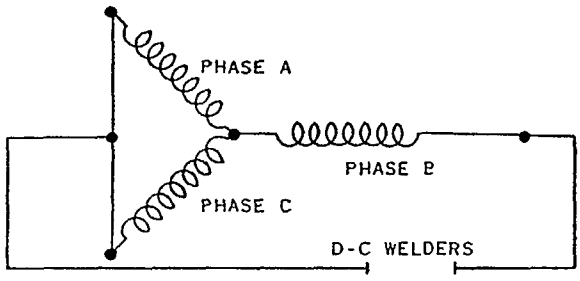

FIG. G-4 — Connections for Drying-out Windings with DC Welder

ually at first, the aim being to allow the water vapor to find its way out naturally through the insulation. Too rapid heating is likely to develop such steam pressure in local portions that escape passages are forced through the insulation, injuring it permanently. It is generally desirable to consume 15 to 20 hours in bringing the temperature up to the value required.

The total temperature of any part of the machine should not exceed 75°C during the early part of the drying out period. Later, after the insulation resistance has passed its minimum value and has become nearly stable, the temperature may be raised to 125°C or slightly higher. If the windings are heated by passing current through them, the temperature of the armature coils should be determined by the embedded detectors, and the temperature of the field windings may be determined by comparison of the winding resistance with its resistance at a known temperature. Refer to the section on "Temperature" for the method of measuring temperature by change of resistance.

During the drying-out process, measurements of insulation resistance should be taken at regular intervals, and it is recommended that the results be plotted in the form of a curve of insulation resistance vs. time. A typical curve of this kind is shown as Figure G-5. The initial drop in insulation resistance can be attributed to the effect of rising temperature, and the subsequent rise in resistance is caused by the removal of moisture. The drying-out process should be continued until the insulation resistance becomes approximately constant at a high value.

Final Check before First Start

Before the unit is started, the following check should be made:

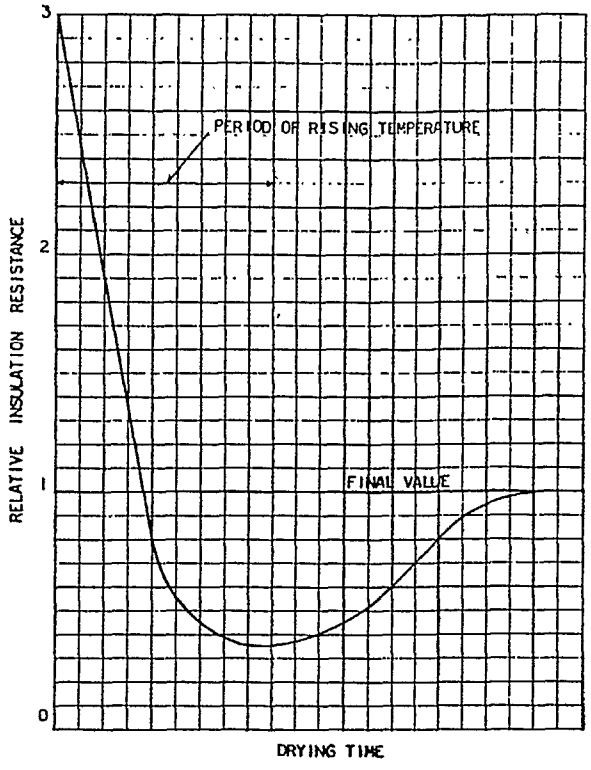

FIG. G-5 — Typical Behavior of Insulation Resistance During Dry-out Run

a. Be sure that all necessary work of installation and erection has been completed.

b. Carefully examine the interior of the generator for loose objects such as bolts, nuts and tools. Such items should be removed from the machine, and care should be taken to prevent their being drawn into it by magnetic attraction.

c. Check to be sure that the brushes are free in their holders and that the brush pressure is about 2-1/2 psi (roughly 2 lb. 5 oz. per brush for this machine).

d. Be sure that the voltage and frequency marked on the nameplate of the generator correspond with that of the power line.

e. Check the wiring and piping to be sure that all connections have been made properly.

f. Check to see that the proper electrical clearances exist between conductors. Do not allow brush shunts to touch each other.

g. Check the drain holes at the bottom of the frame to be sure that they are not clogged.

h. Be sure that all moving parts have sufficient clearance with respect to adjacent stationary parts.

i. Check to see that the windings are free from dirt and moisture.

j. Measure the insulation resistance of the windings, and dry-out the windings if the test shows this to be necessary.

k. Be sure that the coverplates have been installed over the openings in the frame and end bells.

STARTING GENERATOR

Check During First Start

When the unit is first started, the following observations should be made:,

a. Check sight-flow indicators in the oil piping to be sure that an adequate supply of oil is being furnished to the bearing.

b. Be sure that the air cooler is adequately supplied with cooling water of the proper temperature.

c. Watch temperatures wherever possible to be sure that none is excessive.

d. Check the brush rigging to be sure that the brushes ride properly on the collector rings.

Starting Single Generator Unit

a) Before the generator is started from rest, make certain that a-c line breakers are open and no load is connected to the generator.

b) For generating systems equipped with standby regulators, check to determine if the desired regulator is connected for operation. For adjustment and operation of the WRN-11 Static Voltage Regulator see the manual for the Voltage Regulating Equipment.

c) After the regulator has been adjusted for starting:

1. Jumper between D and C_3 of the POTENTIAL UNIT terminal block removed when generators are not to be operated in parallel.

2. Regulator transfer switch (VA) turned to NORMAL unless a standby regulator is used.

3. Regulator control switch (CA) turned to MANUAL.

4. VOLTAGE ADJUSTING UNIT set for the desired generator voltage (normally 450 volts).

5. MANUAL CONTROL UNIT handle turned to extreme LOWER.

d) Start the prime mover and bring it up to the desired speed as indicated by a tachometer.

e) Adjust regulator to bring generator voltage up to the desired value = (normally 450 volts).

1. MANUAL CONTROL UNIT handle turned to extreme RAISE position until the generator voltage starts to rise.

2. MANUAL CONTROL UNIT handle turned back toward the LOWER position to obtain the desired voltage.

f) Set regulator for automatic operation and readjust generator voltage to the desired value.

1. Regulator Control Switch (CA) turned to AUTOMATIC.

2. VOLTAGE ADJUSTING UNIT reset for desired generator voltage.

g) Close the a-c line circuit breaker. The generator is ready to be loaded.

h) If it is desired to operate using MANUAL control, it will be necessary to adjust the generator voltage as the load changes. For a discussion of the effects of a change in excitation see the section on "Operation" which follows.

Paralleled Generators

When the a-c generator units are to be paralleled, the starting of subsequent units is similar to that described for a single generator, but additional care is required in order to synchronize the units.

In order that synchronous generators may be connected to a system already in operation, the voltage of the incoming machine and that of the system must be approximately the same at each instant. This requires that the two voltages be of the same frequency, have the same magnitude and phase rotation, and be in phase with each other. Voltmeters indicate whether the magnitudes of the voltages are the same, and frequency meters of tachometers indicate whether the frequencies, are approximately the same. Whether the voltages are

exactly in phase and of exactly the same frequency is indicated either by a synchroscope or by a synchronizing lamp circuit.

Explanation of Synchronizing Lamp Circuits

Although the indication of synchronism given by a synchronizing lamp circuit is less precise than the indication given by a synchroscope, the frequent use of the lamp circuit justifies an explanation of its operation.

Lamps should be connected between the leads which will be joined together when the generators are synchronized. The lamps should be adapted for the highest voltage which they will receive. This voltage will be twice the normal value and will occur when the machine voltages are in phase opposition. When the voltage of the system is too high for the synchronizing apparatus, it is usual to place voltage transformers between the main circuits and the synchronizing circuits so as to reduce the voltage at the switchboard to a safe value. Fig. G-6 show such connections between two of the same phases of the two three-phase generators. One generator may be considered as representing a system which is already in operation. A recommended check on the transformer connections is given in a later paragraph.

As the voltage of the incoming generator and the voltage of the system change from a condition of phase-coincidence to one of phase-opposition, the flow of current through the lamps changes from a minimum to a maximum. When the voltages are exactly equal and in phase, the current through the lamps is zero. A phase difference between the voltages causes current to flow through the lamp circuit and illuminate the lamps.

If there is a small difference between the frequency of the incoming generator and that of the system, the lamps increase in brilliancy until the voltage of the machine and that of the system are in exact opposition. From this condition, the lamps decrease in brilliancy until they are completely dark (if the voltages are equal in magnitude), indicating that the voltages are again in phase. The frequency with which the lamps alternate between the bright and the dim condition is proportional to the difference between the generator and system frequencies.

When the frequencies of the incoming generator and the system are equal and the voltages are equal but out of phase, the lamps glow with a steady brilliancy. The degree of brilliancy depends upon the amount of phase displacement between the two voltages.

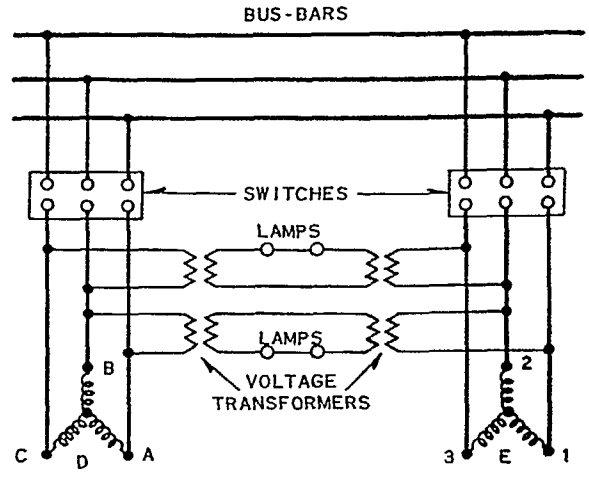

FIG. G-6 — Connections for Synchronizing 3 Phase Generators

When the voltage transformers are required in the lamp circuit because of high line voltages, it is possible for the transformer connections to be made in such a manner that the lamps burn with maximum brilliancy when the two voltages in question are IN PHASE rather than OUT OF PHASE. It is preferable to USE DARK LAMPS TO INDICATE SYNCHRONISM instead.

The following check can be used to make certain that the lamps will be dark when the voltages are in phase. Disconnect the main leads of the incoming generator at the generator, and throw it in the main switch of this generator so that its bus work will be energized from the system. Both voltage transformers will then be energized from the same voltage source, and the lamps will be dark if the transformer connections are correct. If the lamps burn brightly under these conditions, the two connections to one of the primaries or to one of the secondaries of the voltage transformers should be reversed.

Determining Proper Phase Sequence

When a generator is to be synchronized with a system already in operation, the phase sequence of the generator must be the same as that of the system. To check the phase sequence, the following procedure is recommended: Refer to Fig. G-6, and assume that generator "D" is to be synchronized with the system represented by generator "E" Note that synchronizing equipment is required, in two phases

when the phase sequence is to be checked. Check the two lamp circuits separately, as described in the preceding section, to be sure that the lamps in each circuit are dark when the voltages being compared are equal and in phase. Once the circuits have been checked, the proper phase sequence for the incoming generator may be determined.

To check the phase sequence, observe both sets of lamps when the voltage, and frequency of the incoming generator have been made approximately equal to those of the system. If both sets of lamps become bright and dark in unison when the frequency or the incoming generator is slightly different from that of the system, the phase rotation of the generator is the same as that of the system.

If one set of lamps is bright while the other is dark, the phase sequence of the incoming generator is opposite to that of the system. To make the phase sequence of the generator agree with that of the system, interchange any two of the three line connectors between the generator and the bus. It is well to make a confirming check on the phase sequence after changing the connections, but first the lamps should again be checked to be sure that they will be dark when the corresponding voltages are equal and in phase.

Synchronizing Generators With Lamps

Synchronizing lamps are recommended for use as a check on the operation of the synchroscope and for emergency use in case the synchroscope is inoperative. Separate voltage transformers should be used for the synchroscope and lamps. If the phase sequence of the incoming machine is known to be correct, lamps need to be connected between only one phase of the generator and one phase of the system. The lamps should be connected so as to be dark at synchronism and to be at maximum brilliancy when the generator and system voltages are 180 degrees out of phase. Zero potential is applied to the lamps at synchronism. However, an incandescent lamp appears dark even though a considerable potential is applied. For this reason, lamps do not give as definite and accurate an indication of synchronism as is obtained with a synchroscope. Nevertheless they may be used satisfactorily if proper care is exercised.

With the generator frequency slightly greater than that of the system, adjust the speed of the generator so that the bright and dim sequence of the lamps becomes slow and constant. Anticipate the time required for the breaker to close its contacts, and throw the breaker so that its contacts will close at the middle of the dark period.



FIG. G-7 — Synchroscope

Synchronizing Generators With A Synchroscope

A synchroscope is an instrument which is used to indicate the instantaneous difference in phase between the voltage of the incoming generator and the voltage of the system with which the generator is to be synchronized. Refer to Figure G-7. The voltage of the system is used as a reference, and its voltage vector can be represented as a stationary pointer in the "twelve o'clock" position on the dial of the instrument. The voltage vector of the incoming generator is represented by the movable pointer. The number of mechanical degrees between these "vectors" on the synchroscope dial is the number of electrical degrees by which the generator and system voltages are out of phase.

When the pointer is in the left-hand portion of the dial, the voltage of the incoming generator is considered to be lagging the voltage of the system. When the pointer is in the right-hand portion of the dial, the voltage of the incoming generator is considered to be leading the voltage of the system.

The speed of rotation of the pointer is proportional to the difference between the frequency of the generator and that of the system. If the generator frequency is higher than the system frequency, the pointer will rotate in the "FAST" (clockwise) direction, indicating that the gen-

erator is running too fast. If the generator frequency is less than the system frequency, the pointer will rotate in the "SLOW" (Counter-clockwise) direction, indicating that the generator is running too slowly.

Before the incoming generator is connected to the system, a check should be made on the synchroscope to be sure that the pointer of the instrument rotates when the generator frequency is known to be somewhat different from the system frequency.

When the incoming generator and the system are in exact synchronism, the following conditions exist:

a. The voltage of the generator is equal to the voltage of the system. When this condition exists, the generator and system voltmeter readings are equal.

b. The frequency of the generator is equal to the frequency of the system. When this condition exists, the pointer of the synchroscope remains stationary.

c. The voltage of the generator is in phase with the voltage of the system. When this condition exists, the pointer of the synchroscope is in the "Twelve o'clock" position.

In practice, the best results in synchronizing a generator with a system are obtained by closing the line breaker when the pointer is rotating slowly in the "FAST" direction and approaching the "twelve o'clock" position. By observing the synchroscope carefully and timing the closing operation properly, the circuit may be completed at the exact point of synchronism, or at least within a very few degrees of it. Faulty synchronizing will cause a disturbance on the power system and may result in automatic tripping of the circuit breakers.

OPERATION OF A-C GENERATORS

Single Generator

When a synchronous generator operates alone, and is not paralleled with other generators, the field current must be adjusted for each change in load in order to maintain rated voltage. This adjustment can be made through manual control of the regulator, but it is preferable for this to be done with the regulator set for automatic operation to keep the voltage constant even though the load varies rapidly. No change in the power factor of the generator can be affected by changing the field current of the generator, as the power factor for a single generator is determined entirely by the characteristics of the load.

Parallel Generators

a) REQUIREMENTS FOR SUCCESSFUL PARALLEL OPERATION

1. The following paragraphs give the general requirements for successful parallel operation of synchronous generators:

2. The speed regulation of the prime movers should be alike. That is, the percent drop in speed for a given percent increase in load should be the same for all units. The drop in speed from no-load to full-load may be only two percent or less, but if it is the same for all of the generators which are in parallel, the total load will be divided between them in proportion to their ratings.

3. The speed governors of the prime movers should be free from "hunting" and should bring the machines quickly to a steady speed. Any oscillation of the governors will result in a transfer of load back and forth between machines and a fluctuation of the voltage.

b) LOAD DIVISION AND POWER FACTOR CONTROL

1. When synchronous generators are operating in parallel, the power factor of each depends upon their relative excitation and upon the division of the total kilowatt-load among the machines. It is preferable for all the generators to operate at the same power factors.

2. In the following discussion, let it be assumed that the load is to be divided between two generators of equal rating. In addition, it will be assumed that the WRN-11 regulator is set for MANUAL operation. The kilowatt-load may be divided equally between the generators by adjusting the governor settings of the two prime movers. When the two generators are carrying equal loads, their watt-meter readings will be equal. This redivision of load may be affected without any appreciable change in the frequency of the power system (normally 60 cycles) by making each governor adjustment very slight and by making the adjustments alternately on the two machines.

3. After the load is balanced, the power factor and line current of the two generators may be equalized by properly adjusting the manual control unit of the WRN-11 regulator. This may be accomplished without appreciable change in the ship's service voltage (normally 450 volts) by slight and alternate adjustments of the MANUAL CONTROL UNIT handles of the two regulators. Refer to Chapter on Voltage Regulating Equipment.

4. With the Kilowatt-load divided equally between the two generators, the machine operating at the lower lagging power factor has the higher line-current ammeter reading. If the MANUAL CONTROL UNIT handle for the generator having the higher line current is turned slightly toward the LOWER position (in order to decrease excitation), the power factor of this machine will increase and the line-current ammeter reading for this machine will decrease.

5. In an extreme condition of improper MANUAL CONTROL UNIT setting, one generator may be operating at a low lagging power factor while the other generator is operating at unity power factor. Under this condition, the ammeter reading of the lagging power factor machine will be considerably higher than that of the other machine. This is due to the fact that the one generator is carrying all of the reactive-load whereas the other machine is carrying only its share of the kilowatt load.

6. When the WRN-11 voltage regulator is set for automatic control, during the power factor adjustments, the same equalization of current may be obtained. In this case it is necessary to vary from the VOLTAGE ADJUSTING UNIT INSTEAD of the MANUAL CONTROL UNIT. The regulators will continue to maintain the proper division of reactive-load by means of reactive compensation, regardless of changes in load. Refer to Chapter on Voltage Regulator for instructions regarding the jumper required between D and C3 of the POTENTIAL UNIT terminal block for parallel operation.

SHUTTING DOWN OF A-C GENERATOR

Removing Generator From Service

When an a-c generator is operating in parallel with other generators of a system, and it is desired to remove the generator from service, the operator should reduce the load on the generator by adjusting the governor of the generator's prime mover. When all the load has been shifted to the other machines, disconnect the generator from the line. The MANUAL CONTROL UNIT handle of the regulator should then be turned to the extreme LOWER position. Turn the regulator control switch (CA) to MANUAL AND the voltage will drop to zero.

Routine Shutdown

a) The following procedure is recommended for a routine shutdown.

1. Open all line switches to isolate the machine from the external circuits.

2. Shut off the cooling water.

3. Turn on the space heaters.

4. Keep the generator warm and dry.

Extended Shutdown

a) During an extended shutdown, the following protective measures should be taken unless the generator unit can be started periodically and run for a few minutes:

1. Apply slushing compound to the shaft journals and bearing housing to prevent rusting.

2. Remove the brushes from the rings and wipe the rings with paraffin as the machine is coming to a stop with the rings still warm. Be sure that the generator has first been disconnected from the line and that the excitation has been removed before the brushes are raised.

3. Turn on the space heaters.

SECTION 4—MAINTENANCE OF GENERATOR

GENERAL MAINTENANCE

Temperature

The appearance of excessive temperature in any part of the machine is an indication of trouble. The situation should be investigated immediately and the cause of the trouble removed. Routine checks on temperature are recommended so that such conditions may be discovered before serious damage is done.

The bearing thermostat warns of excessive bearing temperature. If the alarm sounds, the oil supply should be checked. Shut down the unit if the temperature cannot be reduced immediately.

The temperature of the stator windings is determined by the resistance-coil type of temperature detectors. The temperature indicating meter which is used with the detectors acts upon the change in the resistance of the detector coils with temperature.

The temperature of the field windings is measured by the change in resistance of the field winding itself.

When the change of resistance of a copper winding is used to measure the average total temperature of the winding, the following equation can be used:

$$t_2 = \frac{R_2(234.5 + t_1)}{R_1} - 234.5$$

in which the resistance values (R) are both in the same units, and the total temperatures (t) are in degrees Centigrade. Subscript "1" refers to the known condition. Subscript "2" refers to the condition at which the resistance is known but the temperature is to be calculated. This equation is satisfactory for the range of temperatures normally obtained in electrical machines.

Possible Sources of Collector and Brush Trouble

One of the principal indications of improper brush and collector performance is sparking. The following list presents possible causes of brush and collector trouble. USE THIS INFORMATION TO PREVENT TROUBLE as well as to remedy it.

IMPROPER BRUSHHOLDER SPRING TENSION

The spring tension should be sufficient to maintain contact between the brush and the collector ring in spite of small vibrations of the brush rigging and collector rings. However, the pressure should not be such as to cause undue mechanical wear. It has been found that a brush pressure of 2-1/2 psi of brush area gives the best brush performance. This is equivalent to approximately 2 lbs. 5 oz. for this machine.

BRUSHES REQUIRING REPLACEMENT

As the brushes become shorter from wear, the springs should be tightened so as to maintain the proper brush pressure. Brushes should be replaced before they reach the limit of their travel.

UNEQUAL CURRENT DISTRIBUTION AMONG BRUSHES

Sparking may result from an unequal distribution of current among the brushes on any one ring. The spring tension should be relieved temporarily on the brush carrying the excessive current. Readjustment of the spring tension may be necessary for all the brushes on the ring to cause each brush to carry its proper share of the current.

DIRTY OR OILY COLLECTOR RINGS OR BRUSH RIGGING

Imperfect contact results when dirt, oil, or particles broken from the brush are present between the brush and the ring. Furthermore, dust between the brush and the holder may conduct sufficient current to fuse the brush to the holder.

The collector rings, brushes, and brushholders should be kept clean and free from dirt, carbon dust, and oil. A piece of canvas dipped in a grease solvent is recommended for cleaning these parts.

IMPROPER BRUSHES

Brushes of the proper grade are furnished with the machine. Other types may give unsatisfactory performance. See "Brush Rigging and Brushes", Page 206.

Brushes of the proper size must be used, If the brushes are too small, they may become

wedged at an angle in the holders. If they are too large they will stick in the holders, but this can be remedied by rubbing the sides of the brush with fine sandpaper.

IMPROPER ALIGNMENT OF BRUSHHOLDERS

The alignment of the brushes on the ring should be checked occasionally to be sure that a brush does not overhang the edge of the ring. If the brush is allowed to overhang, the overhanging part develops a thin edge which chips and breaks off.

VIBRATION OF THE BRUSH RIGGING

Any loose parts of the brush rigging should be tightened.

UNBALANCE IN THE ROTOR OR ECCENTRICITY OF THE COLLECTOR RINGS

Either of these conditions can cause the brushes to leave the rings and draw an arc once every revolution. This repeated arcing at the same place on the ring in time burns the imprint of the brush on the ring.

The truth of the rings can be checked with a dial indicator on the back of a brush while the unit is running at low speed. If the rings are eccentric on the shaft, they should be turned, or ground, and polished. These operations must be done when the rotor is turning, for if they are done at standstill or by hand,the eccentricity of the rings may actually be increased.

ROUGH OR MARKED RINGS

Any black spots that appear on the surface of the collector should be removed by polishing lightly with fine sandpaper. It is very important that this be done; for while these spots are not serious in themselves, they will lead to pitting of the rings and the necessity for regrinding. However, no harm is done to the rings if the condition is corrected at once. If the rings are very rough, they should be ground and polished with the rotor turning. This should not be done at standstill or by hand, for under these circumstances, the rings may be made eccentric and uneven.

CORRODED RINGS

Brush imprints may be burned on the surface of the rings as a result of causes other than unbalance and eccentricity. This burning also occurs when the rings have been left unprotected during an extended shutdown. This usually occurs on a machine which is subjected to corrosive fumes. When the machine is shut down, the fumes act upon the surface of the rings except where they are covered by the brushes. The difference in surface caused by this action produces a slight burning as the rings rotate after the machine has been returned to service. Brush imprints due to corrosive fumes can appear at any point on the rings, depending upon the position in which the rotor happens to stop. Refer to the instructions on "Routine Shutdown" for protective measures.

Corroded rings may require grinding and should always be polished before being returned to service.

UNEVEN HARDNESS OF RING

If a ring is not of uniform hardness around the periphery, uneven wear results, and the performance becomes unsatisfactory.

ELECTROLYTIC ACTION

Because there is an electrolytic action at the surface of the rings, their performance is improved by reversing their polarity occasionally. In some cases, it has been found useful to do this as often as once a week.

UNUSUAL OPERATING CONDITIONS

Excessive current densities due to overloads.

The mechanical contact between the brush and the ring is never absolutely perfect, and high current density at the contact surface can cause sparking with brush fits that would be sufficiently accurate for normal densities.

Extended operation with a low value of brush current.

Brush "chatter", accompanied by sparking, has been found to result from this practice, as when machines are run without load in a standby capacity.

CORRECTIVE MAINTENANCE

Insulation Resistance

GENERAL

The insulation resistance of a winding is the resistance of the insulation to a d-c voltage tending to produce leakage current through the insulation and over its creepage surfaces. Although it is not a measure of the dielectric

strength of the insulation, the insulation resistance indicates whether the machine is in a suitable condition for operation or for high-potential tests.

Insulation resistance is affected by a number of conditions, and often an apparent inconsistency in a group of readings can be attributed to variations in one or more of the test conditions which have been incorrectly assumed constant.

The actual insulation resistance is lowered by the following conditions:

1. Aging of the insulation.

2. Mechanical damage to the insulation.

3. Presence of dirt in the machine.

4. Increased moisture content of the insulation.

5. Increased temperature of the insulation. (The effect of temperature on insulation resistance is great, the resistance at 25°C, being six to fourteen times that at 75°C, depending upon the type of machine.)

Measurements of insulation resistance are lowered by the following factors:

1. Increased magnitude of the test voltage used. (Variations of test voltage as small as two or three to one make no appreciable difference).

2. Increased time of application of test voltage.

SIGNIFICANCE OF TESTS

Insulation resistance varies widely among machines of different sizes and voltages. Therefore, measurements of this quantity are useful chiefly for comparison with those made at other times on the same machine. MONTHLY TESTS OF INSULATION RESISTANCE are recommended for detecting changes in the insulation material or creepage surfaces. In order for these tests to be correlated properly, each test should be made under the same conditions.

A trend toward lower insulation resistance is a warning that failure of the insulation is possible. For this reason, the readings obtained at any particular time should be compared with the previous readings in order to be of maximum significance.

The behavior of insulation resistance while the windings of a machine are being dried out is discussed in the section on "Drying Out Windings".

CONDITIONS FOR TESTS

In order for all the tests to be made under approximately equal conditions of temperature and moisture, it is suggested that the insulation resistance be measured immediately after shutdown while the machine is still hot. It is preferable to use the same method and the same circuit for all tests. In any case, the records of insulation resistance will be more valuable for future reference if the conditions of temperature, moisture, etc., and the test circuit and voltage are noted along with the insulation resistance.

METHOD OF TEST

The insulation resistance of a winding may be measured by using either an instrument called a megger or a d-c test circuit. In either case, one connection is made to the frame (for stator windings) or to the shaft (for rotor windings), and the other connection is made to a common terminal to which all leads of the winding in question are attached.

When the d-c circuit is used, readings are taken with a high-resistance d-c voltmeter, first with the meter connected directly across a 500 or 600 volt d-c power supply, and next with the unknown insulation resistance in series with the meter and power supply. A recommended test consists of 500 volts d-c applied for 60 seconds. Refer to Figure G-8.

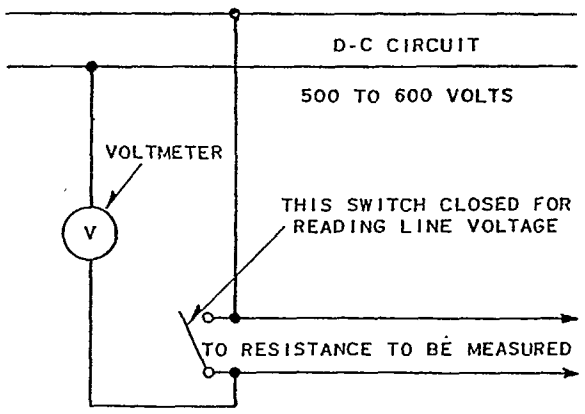

FIG. G-8 — Diagram of Connections for Measuring Insulation Resistance

The insulation resistance may be calculated from the following formula when the d-c test circuit has been used:

$R = \frac{R' \ (E-E')}{1{,}000{,}000 \ E'}$, where

R = Insulation resistance in megohms.

R' = Resistance of voltmeter in ohms.

E = Voltage of d-c power supply.

E' = Voltage read on meter when insulation resistance is in series with the voltmeter.

If the readings of insulation resistance are low, the leads should be disconnected and the measurement repeated separately on the winding and on the leads in order to determine whether the trouble is in the winding or in the leads.

MINIMUM ACCEPTABLE VALUES FOR NEW MACHINES

For values of insulation resistance below which the machine is unsafe for operation, refer to chapter 60, Bureau of Ships Manual.

Annual Inspection

It is recommended that after one year of operation, and once a year thereafter, the generator be thoroughly inspected.

Remove the end bells and the bearings.

Examine the stator core and armature coils for loose wedges, coils, or coil bracing or any other unusual condition. Check the appearance of the coil insulation.

Check the rotor for loose damper bars and loose connections. Check the condition of the turn-to-turn insulation of the field coils and the condition of the ground insulation between the coil and the pole. Be sure that the lower coil supports press the field coils firmly against the upper coil supports. If a field coil is not tight, loosen the lower coil support, push the coil and lower coil support tightly against the pole head and upper coil support, and secure the lower coil support tightly in position. This procedure is done most successfully when the coil in question is located at the bottom of the machine where the weight of the coil can rest upon the head of the pole.

Inspect the collector rings, being sure that they are tight. If the rings are rough, marked, or corroded, polish them as described in the section on "Possible Sources of Collector And Brush Troubles".

Inspect the bearings and smooth out any rough places in the babbitt.

Bring to the attention of a Westinghouse Service representative any condition which cannot be repaired by the maintenance crew.

Clean the generator thoroughly, and clean the air cooler if necessary. These procedures are covered in separate sections.

Cleaning Generator

At the annual shutdown period, the generator should be cleaned. It is advisable to remove the dirt from all accessible parts of the generator, but particularly from the windings, collector, brush rigging, ventilating spaces, and parts adjacent to the electrical windings and connections. Follow the procedures outlined in Chapter 60, Section IV, of the Bureau of Ships Manual.

Ordering Renewal Parts

When ordering renewal parts, give the name of the parts, the drawing and item numbers which apply, and the nameplate reading of the machine, including the serial number. The stator serial number will be found stamped on the nameplate and on the metal under the nameplate. The rotor serial is stamped on the end of the shaft.

Communications

Should communication be desirable or necessary regarding the installation covered by this instruction book, or an individual device included in the installation, replies will be greatly facilitated by citing the General Order (G.O.) number for the complete equipment and the nameplate readings of the detail apparatus involved.

Do not fail to give the stator and/or rotor serial number and the COMPLETE nameplate reading when the information is desired for rotating machines. The stator serial number is stamped on the machine nameplate and the metal under the nameplate and on the machine foot. The rotor serial number is stamped on the end of the shaft.

Should any particular information be desired, please be very careful to state clearly and fully the question for consideration, and the associated conditions.

Communications should be addressed to the nearest Westinghouse Electric Corporation Sales Office. Local sales, engineering or service representatives are usually available for quick consultation.

DISMANTLING THE GENERATOR

Step I. To Remove Rototrol-Exciter Stator and Rotor

See the detailed instructions in the chapter on the Rototrol Exciter.

1. Remove covers from front bracket and raise brushes from the commutator. Remove rear end bell and drip cover.

2. Disconnect all external leads to the exciter stator. Tag leads to facilitate correct replacement.

3. Check air gaps under each pole of exciter carefully and record. Very careful setting of the exciter air gap is necessary for proper operation, and records of the air gap will be very helpful for realignment.

4. Remove the four fitted holding-down bolts from the exciter feet, and slide the exciter stator out axially. Lift the exciter stator by lifting eye at top of frame. The weight of the exciter stator is approximately 1800 pounds. Keep all shims in place to reduce work of realignment.

5. Remove 1"-8 bolt in end of shaft holding exciter rotor. Thread 1-1/2"-6 pulling-off bolt furnished with shipboard spares into the tapped hole provided in the exciter quill nut, and pull off the exciter rotor by tightening this bolt against the end of the shaft. When quill is free from fit on the shaft, place a sling around the body of the rotor and slide off the shaft taking care not to damage the exciter coils or commutator by bumping. The weight of the exciter rotor is approximately 515 pounds.

Step II. To Remove Bearing and Pedestal (Fig. G-9)

1. Remove front outer cover, Item 26, Fig. G-9, from end bell. Shut off oil supply line and disconnect it from pedestal. Drain oil from drain line and disconnect it from pedestal.

2. Unbolt top half of bearing seals, Item 44, Fig. G-9, from bearing cap. Remove the seal closest to the exciter.

3. Unbolt bearing cap, Item 36, Fig. G-9, from pedestal and remove. The bearing cap weighs approximately 50 lbs. Unbolt top bearing seal half nearest to collector from bottom seal half and remove.

4. Lift brushes from collector rings. Disconnect leads at brush holders. Unbolt semicircular piece which holds the brush holder studs, items 52, Fig. G-9, from pedestal and remove brush rigging without disassembly.

5. Lift off top half of bearing, Item 39, Fig. G-9.

6. Remove bulb of bearing alarm contact maker, Item 37, Fig. G-9, from bearing, Item 40, Fig. G-9. Disconnect leads and conduit.

7. Remove rear air seal, Item 88 and rear outer cover, Item 31, Fig. G-9. Remove rear air shield, Item 30, Fig. G-9. Do not damage stator coils by bumping. Place a sheet of steel or fibre board approximately 1/16" thick in lower part of air gap to protect stator punchings when rotor is rested in the stator bore.

8. Disconnect coupling bolts at speed reduction gear. Note or apply match marks on coupling halves before disassembling.

9. Relieve weight of rotor on bearing by lifting slightly with a jack under the shaft placed near the pedestal, and roll lower half of bearing, Item 40, out of pedestal.

10. Disengage pilot fit of shaft at speed reduction gear, and allow rotor to rest on shim in bore of stator.

11. Slide pedestal, Item 35, out axially. The pedestal without cap or bearing seals weighs approximately 220 pounds.

Step III. To Remove Enclosing Covers and Cooler (Fig. G-9)

1. Disconnect leads and conduit at field lead box on front end cover. Free leads from cleat. Remove front end cover, Item 27, Fig. G-9.

2. Remove front air shield, Item 25, Fig. G-9. Do not damage stator coil end turns by bumping.

3. Remove cooler housing, Item 33, Fig. G-9, in sections.

4. Drain water from cooler, Item 34, Fig. G-9, by opening lower (.540 outside diameter) drain.

5. Disconnect piping and remove bolts holding cooler to generator frame.

6. Remove cooler from generator frame, taking care not to spill any water left in the cooler into the machine. The weight of the cooler is approximately 750 pounds.

7. Remove front end cover, Item 27, Fig. G-9, and front air shield, Item 25, Fig. G-9.

Step IV. To Remove Rotor (Fig. G-9)

1. Disconnect main leads, air-temperature alarm contact maker leads, space-heater leads, and temperature detector leads, and free conduit attachments to frame. Tag all leads to facilitate easy replacement.

2. Remove air-temperature alarm contact-maker, Item 92, Fig. G-9, from frame to prevent its being damaged when moving the stator.

3. Remove the four fitted bolts in each generator frame foot.

4. Lift the stator and rotor together, blocking up and skewing stator on prime mover sub-base, so that a jack shaft can be assembled on the generator coupling flange. Keep shims under the frame feet in place to make re-assembly easier.

5. Assemble a jack shaft on the generator coupling flange. Place a sling on both ends of the shaft, and slide rotor out until centerline of rotor clears the stator frame.

6. Block both ends of the shaft to support rotor and release slings.

7. Place sling around center of rotor body and move straight out or by skewing. Great care should be used to prevent damage to the stator coil end turns by bumping.

Step V. To Remove Stator (Fig. G-9)

1. With hooks placed in the four lifting holes at the sides of the frame, exposed by removing covers, Item 2, Fig. G-9, lift the stator from the prime mover sub-base.

REASSEMBLING GENERATOR AND ROTOTROL-EXCITER

Step I. To Re-assemble Stator and Rotor (Fig. G-9)

1. Place the generator stator on the prime mover sub base in an elevated skewed position so that the rotor can be handled with its jack shaft in place.

2. Place a sheet of steel on fibre board approximately 1/16" thick in lower part of stator bore to protect stator punchings. Place slings around the center of the rotor and insert rotor into stator as far as possible and rest on blocking. Do not bump stator coil end turns.

3. Place a sling on both ends of the shaft and slide rotor into stator bore and rest on shim in bottom of stator bore. Remove temporary jack shaft.

4. Lower end straighten stator and rotor together on the prime-mover sub-base, placing shims from previous alignment under feet.

5. Replace air-temperature alarm contact-maker, Item 92, Fig. G-9, on frame.

6. Replace cooler, Item 34, Fig. G-9, on frame, and connect water and drain piping.

7. Connect main leads, air-temperature alarm contact-maker leads, space heater leads, and temperature-detector leads. Replace conduit and fittings associated with this wiring.

Step II. To Replace Pedestal and Bearing and Couple to Speed Reduction Gear (Fig. G-9)

1. Place pedestal, Item 35, Fig. G-9, in position on the sub-base with liners under feet from previous alignment.

2. Raise rotor on blocking, and roll lower half of bearing, Item 40, Fig. G-9, into place, applying a layer of oil to the babbitt surface of the bearing. The bearing and journal must be free from grit and dirt.

3. Align the equipment as described under Installation and Erection, Page 208, and in the manual for prime mover. Place all coupling bolts in position, tighten and secure. Replace holding-down bolts in frame and pedestal feet.

4. Replace bulb of bearing-alarm contact maker, Item 37.

5. Replace top bearing half, Item 39, Fig. G-9. Replace bearing cap, Item 36, Fig. G-9.

6. Replace oil seal rings, Items 44 and 45, Fig. G-9 on the pedestal, checking clearance to shaft with a feeler gauge to make sure it is uniform around the circumference.

7. Replace oil supply and drain lines, taking every possible care to avoid introduction of dirt into the oiling system.

8. Assemble brush rigging, Items 50 to 54, Fig. G-9, on pedestal and adjust brush holders and fit of brushes on ring as described on Page 210.

Step III. To Replace End Bells and Enclosing Covers (Fig. G-9)

1. Assemble rear airshield, Item 30, Fig. G-9.

2. Assemble rear outer cover, Item 31, and adjust air seal, Item 88, for equal clearance at shaft flange by means of a feeler gauge.

3. Assemble front airshield, Item 25, Fig. G-9.

4. Connect brush holder leads.

5. Assemble front end cover, Item 27, Fig. G-9, bringing brush holder leads out through opening to conduit box. Tighten brush holder leads in conduit box.

6. Assemble front outer cover, Item 26, Fig. G-9.

7. Assemble cooler housing, Item 33.

Step IV. To Replace Exciter Stator and Rotor (Fig. G-9)

1. Coat the fits on the exciter shaft with white lead in oil. Place a sling around the body of the exciter rotor and slide on shaft as far as possible. Thread the 1" eight-holding-on bolt into the threaded hole in the end of the shaft, with the plain washer under the head of the bolt, and draw the rotor into the proper position by tightening this bolt. Remove bolt, place plain and lock washers in position and tighten the bolt in place. Do not damage coils or commutator by bumping.

2. Lift the exciter stator into position, first making sure that all brushes are in the raised position.

3. Connect all external leads to the exciter stator. Connect the two field lead jumpers from the generator after the air gap or the exciter has been set electrically as described in the Rototrol exciter instructions. Install conduit associated with this wiring.

4. Lower brushes on commutator and adjust brush holders; check brush tension and fit of brushes on commutator.

5. Set air-gap of exciter as close as possible to the previous alignment (not necessarily equal). Check electrical operation of the exciter and tuning of the exciter as directed in the instructions for the Rototrol exciter, before inserting the fitted holding down bolts and securing the exciter stator to the engine sub base permanently.

6. Replace covers and end bells on exciter, both front and rear.

REMOVAL AND REPLACEMENT OF GENERATOR COILS

Removal of Stator Coils
(Figs. G-12, G-10 and G-9)

1. Remove generator end bells and rotor to obtain access to the stator coils.

2. Remove insulation at coil-lead connections.

3. Remove twine with which coils are lashed to the brace rings, and the twine binding the spacers between the end turns.

4. Using brazing tongs, disconnect coil leads from each other and from wiring-around-frame.

5. Drive out the stator-slot wedges, Item 101, Fig. G-9.

6. Raise the top-layer coil sides of nine coils and tie in the raised position.

7. Remove the stator coils from the slots, starting with the coil adjacent to the raised coil sides.

8. File the wiring around frame connections clean.

9. Clean any excess varnish from stator slots by scraping.

Replacement of Stator Coils
(Figs. G-12, G-10 and G-9)

1. Before rewinding, check spare coils for possible damage in storage, also, check the coils disturbed in the machine, by visual inspection, and check the insulation resistance with a 500 volt hand megger.

2. Place the coils in the slots with the leads toward the connection end. Place temperature detectors in slots between the coil sides as shown on Fig. G-10 and place glass melamine

strips in remainder of the slots. The coils must fit tightly in the slots. If necessary, drive strips of mica at the sides of the coils to tighten them width-wise in the slots, and use filler underneath the wedges to tighten the coils depth-wise in the slot. Note that the connections between the groups of coils are made with the coil ends. Therefore, care should be used when replacing coils, that coils with long leads are placed at the ends of groups of 4 coils, to avoid the necessity of patching in pieces of copper. The coils must be centered in the slot, with an equal amount of straight portion extending beyond the core at each end. All coils are to be drifted into the slots as carefully as possible by placing a board over the entire length of the coil. Light blows from a mallet are to be distributed over the length of the board in such a manner as to force the coils in evenly.

3. The coils must be lashed to each other with the spacers, Item 17, Fig. G-9, between them, and to the support ring, Item 13, Fig. G-9 as they are placed in the slots. That is, when the second bottom coil side is placed in the slot, the end turns are lashed immediately, and each succeeding coil is lashed as it is put in. Lashing is done with glass twine, Westinghouse No. 8211-2, Navy Spec. 17-I-31.

4. To complete the winding, the top-layer coil sides of the first throw of coils should be tied in the raised position with twine. When all bottom-layer coil sides and the strips between coils are in place, remove the twine and force the top layer coil sides of the first throw of coils into the slots.

5. Drive the stator slot wedges, Item 101, Fig. G-9, into the wedge grooves. Care must be taken not to damage the coils when driving the wedge. Use filler strips of insulating material to make coils tight in slots if necessary.

6. Wire the coil ends together temporarily by wrapping with light, bare-copper wire and check the insulation resistance with a 500 volt hand megger. Remove all of the temporary connection wire.

7. Cut and bend coil leads to form coil groups per tabulation of Fig. G-10, and to connect groups per schematic wiring diagram, Fig. G-10. Assemble lead connections, braze connections and apply insulation per Fig. No. 4 of Fig. G-12.

8. After the stator is wound, preheat 5 to 10 hours at 130°C. Cool to 60°C. Dip the stator in varnish Westinghouse No. 2227, Navy Spec JAN-V-1137, Type M grade BB at a temperature of 30°C and viscosity of 20 to 55 seconds, Saybolt. Soak 10 to 20 minutes or until bubbling ceases. Drain 30 minutes and bake 15 hours at 130°C.

9. Cool stator to 60°C and repeat the treatment given in paragraph 8 above to give a total of two dip and bake treatments. (When stator cannot be dipped, apply varnish with hose and pump. Continue flow until windings are saturated. Drain as above. Be sure to ground metal nozzle of hose.)

10. Make insulation resistance check with 500 volt hand megger.

Removal of Rotor Coils (Fig. G-9)

1. Remove generator rotor from stator to obtain access to the field coils. Remove exciter rotor.

2. Unbolt and remove the blowers, Item 63, Fig. G-9.

3. Unbolt and remove the coil braces, Items 81 and 82, Fig. G-9.

4. Heat joints between field coils to soften solder, remove bolts and disconnect. Also disconnect collector leads.

5. Remove locking screws, Item 87, Fig. G-9 from the collector bushing and pull collector from shaft by pulling on bushing, Item 84, Fig. G-9. Do not pull on rings, Item 83, Fig. G-9. Do not damage collector by bumping the rings.

6. Drive out dovetail keys, Item 62, Fig. G-9. Note that the dovetail key assembly consists of three pieces; a thick, drive-out tapered wedge; a thinner, drive-in tapered wedge; and a thin shim placed between the drive-out key and the punchings of the spider. To drive the keys out, strike the thin end of the thick, drive-out key sharply.

7. Remove poles and coils from the spider, and remove coils, coil washers, and wedge washers from the poles. See Items 64 to 78, Fig. G-9.

Replacement of Rotor Coils (Fig. G-9)

1. Assemble top washers, field coils with insulating cell, and bottom washers on the poles with leads located on the collector end. For diagram of leads on open and crossed coils and of assembly of open and crossed coils on the machine, See Fig. G-10. The poles and coils should be weighed at the time of assembly and distributed around the rotor so that it will be

as well balanced as possible. The coils must fit tightly on the poles. Use mica or glass melamine sheet material at sides and ends of coil to make the coil fit snugly on the pole if necessary. Center the poles and wedge washers with the center of the spider. Coat the dovetail keys with white lead and oil. Place the dovetail keys in the dovetail slot, with the thin shim next to the spider punchings, the thick drive-out key next, and the thin drive-in key next to the pole punchings. Drive the thin drive-in key tight, pounding pole down tight on spider. Do not cut off keys until after rotor is run and the keys are re-driven.

2. Coat collector fit on shaft with white lead and oil. Heat collector to 185°C (do not overheat), place the collector in position on the shaft, and cool with an air blast.

3. Tin field coil connections, connect the coils, insert bolts in connections, and solder connections, covering bolt head and nut with solder. Replace connections to collector and solder the connections at field coil.

4. Measure the resistance of the rotor winding and check the insulation resistance with a hand megger. Also, pass a small amount of direct current through the field winding and check the polarity of the field poles with a compass or with a nail supported at the center by a string. Poles must be alternately of north and south polarity.

5. Assemble the coil braces, Items 81 and 82, Fig. G-9 and lock the bolts securely by bending up corners of locking plate.

6. Run the rotor at 1380 RPM, bringing the speed up gradually, and noting the vibration. Make temporary balance corrections if necessary to run without dangerous vibration at 1380 RPM. Drive the dovetail keys tight and cut them off at the spider.

7. Assemble the blowers, Item 63, Fig. G-9, pressing them up under the field coils as tightly as possible.

8. Preheat the assembled rotor 5 to 10 hours at 130°C. Cool to 60°C. Dip the rotor in varnish-Westinghouse P.D.S. #2370, Navy Spec. JAN-V-1137 type M, grade CB at 30°C and viscosity of 20 to 55 seconds, Saybolt. Soak 10 to 20 minutes or until bubbling ceases. Drain 30 minutes and bake 15 hours at 130°C.

9. Cool rotor to 60°C and repeat the treatment described in paragraph 8 above three times to give a total of four dip and bake treatments. (When the rotor cannot be dipped, apply varnish with hose and pump. Continue flow until windings are saturated. Drain as above. Be sure to ground metal nozzle of hose.)

10. Install rotor and check mechanical balance at rated speed. Attach balance weights under heads of bolts holding blowers to spider.

EMERGENCY REPAIR MEASURES

Rebabbitting Bearings

In case it is necessary to rebabbitt an old bearing on a ship, it is necessary to melt out the old babbitt and prepare a suitable mandrel. Since the bearing is split, each half should be babbitted individually. The mandrel should consist of a half cylinder with shoulders running along its length so that the sides of the bearing may rest on them and form a close fit. Pieces of felt should be placed around the ends of the bearing shell to prevent the babbitt from running out at the ends. Remove bearing insulation and replace after bearing is rebabbitted.

Only a good tin-base babbitt such as Navy Spec. No. 46M2, Grade 2, or an approved lead-base babbitt (Westinghouse Alloy No. 25) should be used for such work. The melted babbitt should be poured into the gate until it begins to overflow. Sufficient time should elapse after the pouring and before the mandrel is removed from the bearing to allow the babbitt to harden.

The bearing should then be bored or reamed to the proper size. Holes for the introduction and draining of oil from the bearing should be drilled and the proper machining done to provide grooves at the splits and eccentric chambers for the oil in the center of the bearing. The finishing operations may be done with a suitable scraper.

Repair of Air Cooler

"Approximately 5% of the tubes may be blocked off and the generator air cooler will still operate efficiently. Thus a leaking tube may be blocked off by inserting plugs into each end".

These plugs are furnished with the spare parts - See list of Certification Data Sheets 510-D-394, Fig. G-13.

SECTION 5—GENERATOR AIR COOLER

INSTALLATION OF AIR COOLER

HARRISON RADIATOR DWG. H-99006
BUSHIPS DWG. NO. S6101-H-3159718

Flanged connections are provided on the inlet and outlet cover for connection to the sea water line. Either connection may be used as the water inlet.

Strainers or filters, if used to exclude foreign matter or solids must be installed on the inlet side. The cooling water must be free of foreign matter larger than .250 inch screen openings. Strainers or filters are essential if liquids circulated through the cooler contain foreign matter larger than specified.

Utilize the vent and drain connections on the inlet and outlet cover in conformity with applicable shipbuilder plans. The lower .405 outside diameter "tell tale" tube connection must serve as an open drain warning of tube leakage. The drain line from this connection should be piped to an openly visible funnel and then to a sump. The upper .405 outside diameter tube should be left open to serve as a vent for the double tube leakage detection system. Handle the .540" tube connections as conventional vents and drains. Care must be used to install the piping in such a way that the cooler will be full of water at all times during operation. The cooler will not operate properly if all of the tubes do not contain flowing water.

OPERATION OF AIR COOLER

Open the water valves to give the rated flow (at 85°F) 60 gallons of water per minute. No other operating instructions are necessary.

MAINTENANCE OF AIR COOLER

Clean strainers in sea-water inlet line as frequently as required to provide unrestricted flow.

The inside of the tubes should be cleaned as frequently as necessary to provide unrestricted flow of sea water. The unit should be inspected at long intervals to see if the fins on the outside of the tubes require cleanings from deposits of oil and grease from leaky bearings or carbon from brush wear.

Coolers are provided with zinc electrodes to centralize electrolysis. The electrodes should be examined 30 days after installation, and checked 30 days thereafter.

CLEANING OF AIR COOLER

Step I. Close valves in pipe connections to and from cooler; disconnect air ducts, drain water, and remove the unit from the piping.

Step II. Disconnect inlet and rear covers to expose inside of tubes.

Step III. Clean inside of tubes by use of air or water lance. A rubber plug may be pushed through if needed. Never use metal plug, brush or rod which might scratch the tube wall.

Step IV. Clean outside of tubes by use of steam jet, drying with compressed air.

Step V. Clean any foreign matter from inside of inlet and rear covers.

Step VI. Reassemble, using new gaskets when necessary.

Step VII. Reassemble on generator, replace piping, and air housing, and place cooler in operation as described above under Operation of Air Cooler.

SHIP'S SERVICE A-C GENERATOR

General Index

Description	Page
Air Cooler	203
Air Cooler, Repair of	225
Air Temperature Relay	207
Alignment of Equipment	208
Annual Inspection	220
Armature and Field Leads	207
Armature (Stator) Winding	205
Bearing	205
Bearing and Journal, Examination of	208
Bearings, Rebabbitting	225
Brushes, Brush Rigging	206
Brush Adjustment	210
Brushes, Requiring Replacement	217
Brushholder Spring, Improper Tension	217
Brushholders, Improper Alignment	218
Brush Rigging, Oily or Dirty	217
Brush Rigging, (Unbalance; Marked Rough or Corroded; Uneven Hardness, Electrolytic Action)	218
Classification, Generator	201
Cleaning Collector Rings	208
Cleaning Generator	220
Collector	206
Collector and Brush Trouble, Possible Sources of	217
Collector Rings, Cleaning of	208
Collector Rings, Dirty or Oily	217
Communications	220
Cooling, Ventilation and	207
Core	205
Corrective Maintenance	218
Current Distribution, Unequal among Brushes	217
Description of Apparatus	203
DESCRIPTION OF GENERATOR	201
Dimensions (General)	208
Dirty or Oily Collector Rings or Brush Rigging	217
Dismantling the Generator	221
Drying-Out Windings	210
Emergency Repair Measures	225
Equipment, Alignment of	208
Erection, Installation and	208
End Bells and Enclosing Covers	203
Field and Armature Leads	207
Field, (Rotor) Winding	206
Field Poles	206
Frame	203
General Arrangement	203
General (Dimensions)	208
General Maintenance	217
GENERATOR AIR COOLER, Installation, Operation, Etc.	226
Generator Classification	201
Generator Test Data	201

General Index — Continued

Description	Page
Handling and Unpacking	208
Heaters, Space	207
Improper Alignment of Brushes	218
Improper Brushes	217
Initial Check on Insulation Resistance	210
Installation and Erection	208
INSTALLATION OF GENERATOR	208
Insulation Resistance, Initial Check on	210
Insulation Resistance (Maintenance)	218
Journal, Examination of Bearing and	208
Leads, Armature and Field	207
Load Division and Power Factor Control	215
Lower Coil, Support, Balance Weights and Blowers	206
Machine Identification and Data	201
MAINTENANCE OF GENERATOR	217
Mechanical Rotation	206
Nameplate Data	203
Operation of Generator	210
Single Generator	215
Parallel Generators	215
Paralleled Generators	212
Phase Rotation	206
Phase Sequence, Determining Proper	213
Power Factor Control, Load Division and	215
Purpose	201
Reassembling Generator and Rototrol-Exciter	222
Rebabbitting Bearings	225
Removal and Replacement of Generator Coils	223
Removing Generator from Service	216
Renewal Parts, Ordering	220
Repair of Air Cooler	225
Replacement, Brushes Requiring	217
Rotor Coils (Removal, Replacement)	223
Rotation, (Mechanical, Electrical)	206
Rotor (Field) Winding	206
Shaft and Spider	205
Shutdown (Routine, Extended)	216
Shutting Down of A-C Generator	216
Short-Circuit Currents	206
Space Heaters	207
Spare Parts	207
Starting (Check Before and During First Start, Etc.)	210
Stator (Armature) Winding	205
Stator Coils (Removal, Replacement)	223
Stator Temperature Detectors	207
Storage	208
Synchronizing Lamp Circuits, Explanation of	213
Synchronizing Generators with Lamps (with Synchroscope)	214
Tabulation of Winding	205
Temperature	217
Temperature Detectors (Stator); Relay (Air)	207
Test Data, Generator	201
Unequal Current Distribution among Brushes	217
Unusual Operating Conditions	218
Ventilation and Cooling	207
Windings, Drying-Out	210

CHAPTER 3—D-C ROTOTROL-EXCITER

TABLE OF CONTENTS

Description	Page
GENERAL DATA	301
Identification	301
Referenced Specifications	301
Referenced Drawings	301
Exciter Rating	301
Exciter Classification	301
Weights (Calculated)	301
Efficiency	301
SECTION 1 - INTRODUCTION	302
SECTION 2 - DETAILED DESCRIPTION	303
Magnet Frame	303
Front Bracket (Commutator End)	303
Main Pole	303
Commutating Pole	303
Main Field Winding "X" and "Y" Axis	303
Commutating Field Windings	303
Armature Core	303
Armature Winding	303
Commutator	303
Brush Rigging	303
Brushes	304
Shunt Field Tuning and Control Field Resistors	304
Rotation	304
Commutation	304
Spares	304
SECTION 3 - INSTALLATION INSTRUCTIONS	305
Installation of D-C Rototrol Exciter	305
Unpacking	305
Inspection	305
Handling	305
Connections	305
Adjustments	305
General	305
Mechanical Line-up	306
Tuning Procedure	307
SECTION 4 - OPERATION OF ROTOTROL-EXCITER	309
Before Starting	309
Starting	309
SECTION 5 - MAINTENANCE	310
Direct Current Rototrol Exciter	310
General	310
Insulation	310
Methods of Drying	310
Usual Causes of Poor Performance	311
Flashover	313
Causes of Insufficient Voltage	314
Cleanliness	314

2. Remove an outside lead from the terminal block of the front resistor plate with a screwdriver.

3. The resistance between the outside binding posts of this plate should be 200 ohms.

4. The resistance between the center binding post and either outside one should vary between zero and 200 ohms as the handle is turned from one stop to the other. No open-circuit (very high resistance) should be noted at any point of this check.

5. The resistance across the fixed-resistor plate should be between 100 and 200 ohms depending upon the position of the shorting connection.

6. The resistance between the rectifier tap and terminal should not be zero in either direction; i.e., with the ohmmeter leads reversed.

7. Replace lead on front resistor plate.

c) **Voltage Adjusting Unit**
(Fig. VR-12, page 406).

1. Turn regulator control switch (CA) to MAN.

2. The resistance across the resistor (leads V38 and V48 on most schemes, see Master Plan) should vary from zero to 75 ohms, as the handle is turned. Turning the handle toward LOWER should short-out resistance. No open circuits (high resistance points) should be observed on this test.

d) **Potential Unit**
(Fig. VR-9, page 405).

1. Turn the regulator control switch (CA) to MAN.

2. Remove the potential fuses between V1, V2 and the generator bus.

3. Remove the three current-transformer leads C0, C1 and C3 at the terminal block.

4. Megger between terminals V1 or V2 and ground; also between any other convenient terminal on the block and ground. This should be at least .5 megohm.

5. The resistance between V1 and V2 should be 2.05 ohms.

6. The resistance between V18 and V27 should be between a minimum of 6.3 ohms and a maximum of 23.8 ohms. The value depends upon the setting of the resistance.

7. The resistance between V27 and C13 should be 3.2 ohms.

8. The resistance C0 to C1 should be .084 ohm with C23 a center tap.

e) **Automatic Control Unit**
(Fig. VR-6, page 404; and Fig. VR-7, page 404).

1. Turn the regulator control switch (CA) to MAN.

2. Remove wire (-) from resistor tube.

3. Take an ohmmeter around the circuit. A high-inductance coil will show a slowly increasing deflection. No coil in this circuit has so high an inductance that a second or two will not give the correct reading.

Capacitors will show an open-circuit to the ohmmeter but an initial deflection will be noted. Reverse the ohmmeter leads and an even greater deflection will be observed and then it will show a very high resistance. This indicates a good capacitor.

Measured resistance should be within 20 per cent of the value called for.

4. Measure the resistance across the resistor tube, piece 32. It should be 12 ohms.

5. Measure the resistance from NAL to F(+) and F(-). The resistance should be 1.9 ohms This measures piece 24.

6. Measure the resistance across each leg of the rectifiers, piece 34. On each leg reverse the ohmmeter leads. Any rectifier with a shorted leg should be removed.

7. Measure resistance of saturating reactor S, piece 25, across S to V48. The resistance should be approximately 2.2 ohms.

8. Resistance of piece 26, the insulating transformer, is:

a. Secondary is 1.6 ohms, from SS to SF.
b. Primary is 1.1 ohms, from PS to PF.

9. Resistance of reactor, piece 23, is 5 ohms. Measure from PS to F.

10. Resistance of reactor, piece 22 is 1.4 ohms. Measure from PS to F.

11. Check capacitors:

TABLE OF CONTENTS — Continued

Description	Page
SECTION 5 - MAINTENANCE - Continued	
Wiping Cloths	314
Compressed Air	314
Solvents	314
Applying Solvents	314
Water, or Water and Solvents	315
Excessive Heating	315
Field Coils	315
Armature	315
Commutator	315
Disassembly and Assembly	315
Removal of Armature from Shaft	315
Assembly of Armature on Shaft	315
Removal of Poles and Coils	315
Certification Data and Spare Parts CD-5203 (CVA-63)	Tab 1
Certification Data and Spare Parts CD-5243 (CVA-64)	Tab 1
Master Plan Dwg. 1-JH-1815	Tab 2

d. Rectifiers may be shorted. No voltage will appear across shorted legs with power on regulator. Replace rectifier.

e. Check wiring from the regulator through the control switch. See that all connections are tight. Check switch contacts and clean them.

f. Reactor F.R. in POTENTIAL UNIT may be shorted. Measure voltage across C13-V27. If this voltage is not at least half of the generator voltage, the reactor winding is probably shorted, replace reactor.

g. A faulty control field circuit. Check circuit and field. Field F1-F2 should measure between 50 and 60 ohms. See that the field is not reversed.

b) Parallel Machine Operation

Under single-machine operation the generator voltage is the chief symptom of regulator trouble. Under parallel operation, the chief symptom of regulator trouble, is power factor. System voltage will assist in locating the trouble.

HIGH SYSTEM VOLTAGE, POWER FACTORS UNEQUAL

1. The generator with its power factor indicating excessive lag may have a defective regulator. The load power factor generators will be reading lead or close to unity, depending upon the load. Proceed on the faulty regulator as described in "High Voltage" for a single machine.

LOW SYSTEM VOLTAGE, POWER FACTORS UNEQUAL

2. The generator with its power factor indicating lead is probably at fault. The other generators will be indicating at low lagging power factor. Proceed on the faulty regulator as described in "Low Voltage" for a single machine.

CHAPTER 3
D-C ROTOTROL-EXCITER
Style No. 1660 545

GENERAL DATA

1. IDENTIFICATION

Submitted by: Westinghouse Electric Corp.
Application: Ship's Service. Exciter for 1500 KW A-C Generator

2. REFERENCED SPECIFICATIONS

The Rototrol described hereunder will conform strictly with MIL-G-3111,unless exceptions are specifically enumerated on Master Plan Drawing.

3. REFERENCE DRAWINGS

The following plans show the various construction details which cannot be suitably covered in these manufacturer's specifications:

Title of Drawing	Manufacturer's Number	Bureau Number
Master Plan	1-JH-1815	S6101-H-3198187
Certification Data	CD-5203	CVA63-201-1703722
Certification Data	CD-5243	CVA64-201-1748081

4. EXCITER RATING

Kilowatts - 10 Amperes - 144
Volts - 69.4 RPM - 1200
Duty - Continuous Overload Rating - 201 Amperes for 5 minutes
Temperature Rise 60°C

5. EXCITER CLASSIFICATION

Prime Mover - Overhung on A-C Generator Shaft
Degree of Enclosure - Drip-Proof - Protected
Class of Insulation - Class B
Method of Cooling - Self-Ventilated

Ambient Temperature of Reference - 50°C
Type of Winding - Special
Speed Class - Constant

Manufacturer's Type and Class - Frame 123.11E Type SK
Service - Navy Service A
Shockproofness - Hi-Shock

6. WEIGHTS (Calculated)

Rototrol Exciter (Complete) - 2365 lbs.
Spare Armature (Complete less blower)-515 lbs.
Blower - 30 lbs.

7. EFFICIENCY

Included as part of generator efficiency.

b. If the trouble still persists, take the faulty generator out of operation. Check the circuit as described under "Trouble Shooting".

2. LOW SYSTEM VOLTAGE

a. Under this condition one generator will have a very low "leading" power factor. Switch the control of the generator with leading power factor to manual control with the manual control handle set for normal voltage. Equalize the power factor meter readings with the manual control.

b. If the trouble still persists, take the faulty generator out of operation. Check the circuit as described under "Trouble Shooting".

4D4. TROUBLE SHOOTING CHART

a) Single-Machine Operation

It is very unlikely that trouble will be encountered on more than one regulator under parallel operation, consequently a trouble shooting chart for a single regulator will be given first and a short treatment of parallel operation will follow. SECURE THE BOARD before checking any circuits or replacing any parts.

The ROTOTROL brushes should all be raised if the machine is to be run for mechanical checks or any time when the voltage is not intended to be controlled by the regulator or the manual control. The ROTOTROL should never be rotated in the direction opposite to that specified.

1. REGULATOR CIRCUIT CHECK

The regulator can be checked as a unit according to the following procedure:

a. Remove the fuses between the generator's bus and V1 and V2, so power may be applied to V1-V2 without putting power on the generator.

b. The ROTOTROL should be at rest or all of its brushes raised.

c. Turn the regulator control switch (CA) to AUTO.

d. Apply a-c voltage to V1 and V2 of between 100 and 400 volts at approximately 60 cycles per second.

e. Using a d-c voltmeter check the voltage across NAR-NAL. NAR should be positive on the regulator and F1 should be positive with respect to F2 at the machine.

f. Raise the voltage to 450 volts, turn the voltage adjusting rheostat to extreme LOWER and the d-c polarity should reverse NAL and F2 should now be positive.

2. MANUAL CONTROL UNIT CHECK

The manual control unit can be checked individually according to the following procedure:

a. The regulator control switch (CA) must be turned to AUTO.

b. Apply approximately 50 volts d-c to MP and MN of the manual control unit, making MP positive. If step (a) were not observed the ROTOTROL armature would practically short-circuit this voltage.

c. Turn the handle to extreme LOWER.

d. A d-c voltmeter across MR and ML should indicate a voltage with ML positive.

e. Turn the handle to extreme RAISE.

f. The voltmeter should now indicate a voltage with MR positive.

3. VOLTAGE BUILD-UP

If the machines contain insufficient residual magnetism to build up the voltage, the field must be "flashed" as follows:

a. Turn the regulator control switch (CA) to MAN.

b. Turn the manual control handle one quarter turn from the LOWER stop.

c. Run the generator at minimum speed.

d. Apply 5 to 15 volts d-c between MR and ML of the manual control unit or F1 and F2 of the ROTOTROL. Make MR or F1 positive. Watch the a-c generator voltage. Remove the d-c voltage when the a-c voltage reaches 300 to 400 volts, and control the voltage with the manual control unit.

e. If the system now fails to build up on manual control, switch to automatic control.

f. Should the system voltage still fail to build up and both units have been checked as described above, it indicates trouble in the control field circuit. Check all connections, contacts of switches and ROTOTROL control field.

SECTION 1—INTRODUCTION

The Rototrol is quill type with laminated frame and is overhung on the a-c generator shaft with the frame rigidly mounted on the engine bedplate.

The Rototrol is equipped with dripproof covers and all openings are covered with No. 4 mesh screen for suppression of radio noise.

The design of the front bracket cover is such as to provide ready access to all brushes and brushholders, making adjustment or replacement of the brushes easy.

The entire construction of the Rototrol exciter such as to provide a compact and rugged unit combined with maximum accessibility for service and maintenance.

STEP 2. Replace jumper between (C3 and D) on the potential unit terminal block. This puts the reactive-droop compensator into operation.
STEP 3. Place the system in operation under automatic regulator control. Set the voltage at 450 volts and 60 cycles per second. Keep the generator speed constant.
STEP 4. Apply rated load at rated power factor. Note the generator voltage, it should be approximately 4 per cent low or 432 volts. To reduce the load voltage reduce the resistance in resistor (RC) between terminals C13 and D.
STEP 5. Repeat steps 1 to 4 inclusive on the other generator. The full-load voltage on the generators should be equal or very nearly equal. (If the no-load voltage is not the same on the two generators, the change in voltage as load is applied should be compared.)
STEP 6. If the changes in voltage on the two generators are not more than one volt different, they are ready to be operated in parallel.
STEP 7. When two unloaded generators can be paralleled the following procedure gives a satisfactory means of adjusting the reactive droop compensation:

(a) Follow steps 1, 2 and 3 above for Gen. A.

(b) Bring the second generator, Gen. B, up to speed and bring its voltage up under manual voltage control as described in "Initial Operation" on page 426. Switch generator B to automatic regulator control. Keep both machines running at 60 cycles per second throughout the test.

(c) Set the voltage of each generator to 450 volts and parallel the two machines.

(d) Place generator B under manual control. Turn the manual control in the LOWER direction until the ammeters indicate a circulating current of 60% of the rating of one generator.

(e) Note this voltage. It should be about 432 volts (4% droop).

(f) Return the voltage to 450 volts with the manual control of generator B.

(g) Switch generator B to automatic regulator control and generator A to manual control.

(h) Turn the manual control of generator A in the LOWER direction until the same value of current obtained in step (d) is reached.

(i) The voltage should now be within one volt of the value obtained in step (e). If not, adjust resistance (RC) in the regulator for generator B between terminals C13 and D.

(j) Return the voltage to 450 volts with the manual control of generator A.

(k) Switch generator A to automatic regulator control.

(l) The generators are now ready to be operated in parallel to a load.

4D2. NORMAL OPERATION

a) New or repaired equipment should be checked as described under "Initial Operation" page 426. Equipment that has not been used for a considerable time should also be checked as above. After the initial checks have been made the regulating system may be operated according to the following procedure.

1. Single Generator Operation—Ship's Service Generators

STEP 1. Be sure the generator line circuit breaker is open or no load connected to the generator and the regulator control switch (CA) is turned to MAN.
STEP 2. Be sure the voltage adjusting unit and manual control unit are turned to the position marked for 450 volts.
STEP 3. If the generator is to be operated in parallel be sure the jumper is on the potential unit terminal block between (D and C3). If it is not to be operated in parallel, remove this jumper.
STEP 4. Start the prime mover and bring it up to speed.
STEP 5. Turn the regulator control switch (CA) to AUTO. If the voltage is not 450 volts adjust it with the voltage adjusting unit.
STEP 6. Close the generator circuit breaker. The generator is ready to be loaded.
STEP 7. If the generator is to be operated on manual control, it will require adjustment as the generator load is changed to maintain 450 volts.

2. Single Generator Operation—Emergency Generators

STEP 1. Start the prime mover and bring it up to speed. If shutdown procedure outlined below (4D25) has been followed, the generator terminal voltage should come up to 450 volts and remain there under control of the regulator.

3. Parallel Operation—Ship's Service Generators Only

The following procedure is to be followed for paralleling a generator with a bus or another generator.

SECTION 2—DETAILED DESCRIPTION

MAGNET FRAME

The frame is made of laminated sheet steel held together by heavy steel plates on each end welded to a steel plate which completely encircles the laminations.

FRONT BRACKET (COMMUTATOR END)

The front bracket or rocker ring is made of steel. It mounts on the commutator end of the frame and provides the mounting for the brushholders and rods. A canopy is provided which completely covers the brush rig and makes it dripproof. The bottom openings are covered with No. 4 mesh screen for radio noise suppression.

MAIN POLE

The four main poles are made of laminated steel punchings securely held together by rivets. Two bolts are used to fasten the pole piece to the frame. The air gap is detailed on the Master Plan Drawing.

COMMUTATING POLE

The four commutating poles are made of laminated steel punchings securely held together by rivets. Two bolts are used to fasten the poles to the frame. The commutating pole air gap is detailed on the Master Plan Drawing.

MAIN FIELD WINDING, "X" and "Y" AXIS

See Master Plan Drawing for conductor, turns per coil, wire space and lead data. Coils are wound in a shell consisting of a 1/16-inch thick glass melamine tube with 1/8-inch thick glass-melamine end washers. L-shaped pieces of .010-inch glass and mica are placed along sides of coil to protect it from frame and pole tips. The coil is taped with a half-lapped layer of .007-inch glass tape and then impregnated by vacuum-and-pressure method with Westinghouse No. 8826-4 varnish. It is then given two dipping and baking treatments with Westinghouse No. 8826-4 varnish. The center block or mould is 4-3/8 inches wide by 11-1/2 inches long with 1/8 inch radii at the corners.

COMMUTATING FIELD WINDINGS

See Master Plan Drawing for conductor, turns per coil, wire space and lead data. Coils are wound in a shell consisting of a 1/16-inch thick glass-melamine tube with 1/8-inch thick glass-melamine washers. The finished coil is dipped and baked the same as for main field coils. The center block is 6-15/16 inches long by 1-9/16 inches wide with 25/32 inch radii at the corners.

ARMATURE CORE

The armature core consists of circular laminations of silicon steel with steel end plates on each end, all riveted together with the slots skewed 15/16 inch in a counter-clockwise direction from the commutator end. The keyway is then cut and the assembly pressed on the quill. The core length is 10-3/4 inches, and the diameter is 13 inches. There are 49 slots. See Master Plan Drawing for shape and size of slots.

ARMATURE WINDING

See Master Plan Drawing for details.

COMMUTATOR

The commutator is of the V-ring bound type. The bars are of hard drawn copper with a slotted neck portion for receiving the armature coil ends. The bars are held between steel V-ring insulated with formed 1/16 inch mica V-plates. The 147 copper bars are insulated from each other by .025 inch thick mica plates and the mica is undercut 3/64 of an inch. A commutator ring nut located on the threaded front end of the commutator bushing is used to secure the front V-ring in place.

The armature conductors are soldered into the slotted commutator bar necks.

BRUSH RIGGING

The brush rigging is supported on a steel rocker ring which is bolted in place to the frame. The rocker ring carries four round brushholder rods which carry the brushholders.

The rocker ring can be shifted in position. This has been determined at the factory and is doweled in place.

There are twelve brass radial type brushholders, three on each rod. The brushholders clamp tightly to the rod by means of clamping

SEC. D—OPERATING INSTRUCTIONS

4D1. INITIAL OPERATION

a) The following steps should be observed in starting a generating system either the first time or after repairs have been made.

1. Generator With Regulator

STEP 1. Be sure the generator line circuit breaker is open or no load is connected to the generator. .

STEP 2. Turn the regulator control switch (CA) to MAN.

STEP 3. Turn the voltage adjusting unit to extreme LOWER.

STEP 4. Turn the manual control unit to extreme LOWER.

STEP 5. Start the prime mover and bring it up to rated speed.

STEP 6. Turn the manual control unit to the extreme RAISE position. When the generator voltage starts to rise turn the handle back toward LOWER. Set the generator voltage at 450 volts. Mark the position of the manual control unit handle.

STEP 7. Set the handle of the voltage adjusting unit close to the LOWER stop.

STEP 8. Turn the regulator control switch (CA) to AUTO. The generator voltage is then under automatic regulator control. The voltage may not be 450 volts but the voltage adjusting unit can be used to adjust this voltage. Mark the position of the voltage adjusting handle for 450 volts. Turn the handle to the extreme LOWER and RAISE positions. The generator voltage should vary from not more than 436 volts to at least 482 volts. If this range is not met the following procedure should be used:

Turn the voltage adjusting unit to the extreme LOWER position. The generated voltage at 60 cycles per second should be between 430 and 436 volts. If it is not, adjust the tap of the resistor (RV).Shorting-out resistance lowers the voltage. Be sure to de-energize the unit before working on it.

2. Single Generator Under Load

a. The no-load checks on the regulating system should be made before load is applied. When applying load to the generator for the first time, the following procedures should be used:

STEP 1. Remove the parallel operation jumper between (C3 and D) on the potential unit terminal block.

STEP 2. Turn the regulator control switch (CA) to MAN.

STEP 3. Turn the manual control unit to extreme LOWER.

STEP 4. With the generator disconnected from the bus, bring the prime mover up to speed. Bring the voltage up to 450 volts with the manual control unit.

STEP 5. Apply load, maintain 450 volts and normal frequency.

STEP 6. Remove load, still maintaining 450 volts.

STEP 7. Set the regulator control switch (CA) to AUTO.

STEP 8. Adjust the voltage to 450 volts by the voltage adjusting rheostat.

STEP 9. Apply load at a power factor between rated and unity. Hold normal frequency and increase the load to full load. The difference between the maximum and minimum of the average of the three-phase voltage observed from no load to full load should not exceed nine volts. Should the voltage not meet this requirement, the load voltages may be raised by increasing the resistance in (RC).

STEP 10. Turn the voltage adjusting rheostat to each extreme. The voltage range should at least be 436 to 482 volts.

3. Parallel Operation Of Generators

a. The reactive-droop compensators should be used when generators are to be operated in parallel. This will cause equal division of reactive load between generators. Each generator to be operated in parallel should be checked in the following manner:

STEP 1. A new or repaired generating system should be checked as described in paragraphs 4D1 a 1 and 2 before operation in parallel.

screws. Each brushholder has two fingers which press down against the top of the brush in its holder. The pressure at which this finger presses down on the brush is adjusted by the position of the spring which can be placed in one of several notches on the brushholder body. The pressure applied by the finger should be 2 to 2-1/2 pounds per square inch measured parallel to the direction of brush travel in the holder.

BRUSHES

Brushes are 3/8 inch by 3/4 inch by 1-1/2 inches long, grade SA-35, which meet the requirements of Navy Specification 17-B-8, Grade A. These carbon brushes are manufactured by the National Carbon Company for Westinghouse Electric Corporation. The brushes are supplied with flexible copper shunts to carry the current from the brush to its holder. The terminal clip is of a special design to prevent the brushes being thrown out of its holder during shock.

SHUNT FIELD TUNING AND CONTROL FIELD RESISTORS

Mounted on the under side of frame, directly between the feet, are three shunt field tuning resistors and one control field resistor (see Master Plan Drawing for exact location and connections). These are Hi-shock test resistors bought from the Ward Leonard Electric Company. The three shunt field tuning resistors are 150 ohms, 75 watts, with taps and are connected at installation in whatever series parallel combination is necessary in order to tune Rototrol with the generator field. The control field resistor is 400 ohms, 75 watts, adjustable, with a slider, and is adjusted at installation in conjunction with regulator.

ROTATION

1. The rotation of the Rototrol exciter is clockwise as viewed from the commutator end.

COMMUTATION

1. In a d-c machine it is necessary that the current in the armature coil reverse from a maximum in one direction to a maximum in the opposite direction, each time the commutator bar to which the coil is connected passes under a brush. If this reversal of current is not accomplished before the commutator bar emerges from under the brush there may be sparking and damage to the brushes and commutator. In order that this reversal of current may be accomplished during the period the commutator bar is under the brush, interpoles are added to help the current in the armature coil reverse by producing a flux that generates a voltage in the coil being commutated to aid this reversal of current. In a normal generator the load current flows through the commutating coil and produces a flux proportional to the current being commutated.

2. It is necessary to the normal operation of the Rototrol exciter for the current distribution in two brush arms of the same polarity to be varied by means of a current flowing in the control field (F1-F2).

3. As the current distribution in the brush arms is varied the armature coil currents will likewise vary. If only one interpole coil per pole were used the flux from the interpole would not vary correctly with the armature current. In order to obtain a commutating pole flux that varies with the current in each brush arm, four commutating coils are used on each interpole. One coil on each pole is arranged in series with each brush arm and the combined effect gives the required compensating flux for good commutation. Refer to the wiring-around-frame drawing on the Master Plan Drawing for the proper connections.

SPARES

One set of Shipboard spares is ordered. See Certification Data Drawing(s) for list of material supplied.

fier sections referred to in the above description are actually one rectifier stack with a tap. Reference to the diagram of Fig. VR-40 (a) will show how this is possible. The component parts are indicated on the photograph of Fig. VR-11, page 405.

e) Damping Transformer Assembly

1. The primary winding of the damping transformer with an adjustable series resistor is connected across the a-c generator field. The secondary winding is connected in series opposition with the output of the automatic control unit. Any change in the generator field voltage produces a current which opposes the output current of the automatic control unit.

2. The desired amount of damping is obtained by changing the value of the series resistance.

f) Wiring Diagrams

1. Fig. VR-41 shows a typical wiring diagram of the voltage regulator system. This figure shows all of the energized circuits in red for automatic voltage regulator control. The manual control circuit is shown as not energized. Turning the regulator control switch (CA) to MAN transfers the control from the automatic regulator to the manual control unit. This condition is shown in Fig. VR-42.

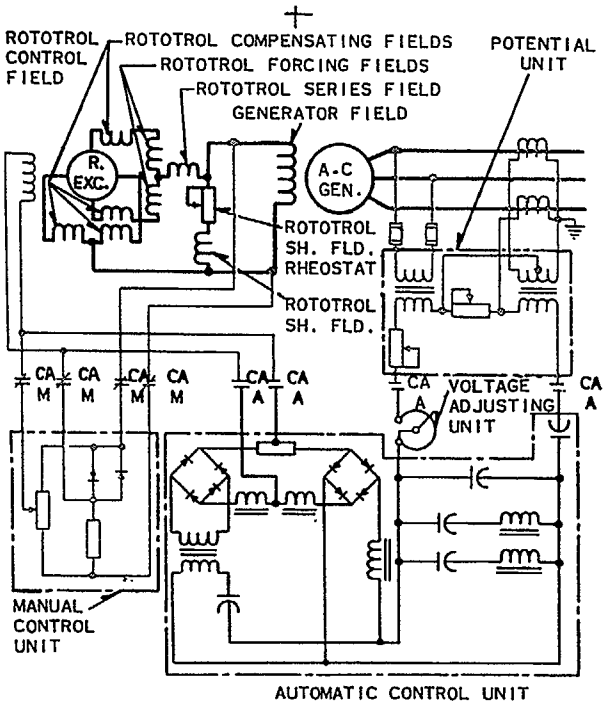

SCHEMATIC DIAGRAM OF VOLTAGE REGULATOR SYSTEM SHOWING MANUAL AND AUTOMATIC CONTROL UNITS. THE REGULATOR CONTROL SWITCH (CA) IS TURNED TO "MAN" PLACING THE MANUAL CONTROL UNIT IN CONTROL OF THE ROTOTROL EXCITER VOLTAGE. ALL ENERGIZED CIRCUITS ARE SHOWN IN RED.

FIG. VR-42 — Schematic Diagram Showing Manual Operation

SECTION 3—INSTALLATION INSTRUCTIONS

UNPACKING

When unpacking, be sure and protect any exposed windings from damage. Coil insulation is easily damaged. Never pry against a winding, nor strike it a blow with a hammer. Do not allow sharp instruments to come in contact with the coils.

INSPECTION

As soon as the machine is unpacked, give it a thorough inspection. Look especially for and loose field connections, bolts, cover, broken brushes, or brushholders, and any noticeable damage to coil insulation. Repair immediately any damage found. If the machine has been in storage some time, or has been exposed to dampness, the insulation resistance should be checked. (See instructions under "Maintenance"-Insulation.)

HANDLING

Electrical equipment is easily damaged when dismantled. If the machine is dismantled and the windings are exposed, care is necessary to protect these windings from damage. In handling the armature, do not allow the commutator or coil ends to be bumped as this will damage them. Support the armature by rope slings about the steel punchings of the core. Never support the armature by pressure on the coil ends or on the commutator, either when using a rope sling or when resting on blocks. Never use any sharp instrument on any coils, as the insulation can easily be punctured.

CONNECTIONS

Connect the exciter in accordance with the diagrams supplied with the regulating equipment and wiring-around-frame drawing.

ADJUSTMENTS

The generator along with the Rototrol-exciter are mounted on the prime-mover bedplate by the manufacturer. All adjustments for tuning of the Rototrol are made at this time, and it should normally not be necessary to further adjust the Rototrol after the set is received. Barring actual breakdown of the Rototrol, there is little to disturb its adjustment. The brushes can affect tuning if they are not completely seated, therefore, when installing new brushes the procedure outlined in the section on "Maintenance" should be followed carefuliy. After the brushes are seated they should be allowed to run in for an hour or more with load on the Rototrol.

Tuning of the Rototrol is also affected by the air gaps, however, the Rototrol feet are fastened to the bedplate with large body-bound bolts, so that the air gaps cannot change unless the bedplate somehow becomes distorted due to a severe blow or shock. This possibility is rather remote inasmuch as the equipment was designed to withstand HI shock.

If the Rototrol is ever dismantled, proper precautions as outlined in the "Disassembly and Assembly" section under "Maintenance" should be strictly adhered to. The reason for these precautions is that adjustments have been made in the Rototrol air gaps during test at the factory to compensate for tolerances in manufacture which for ordinary machines would be of little importance. One method of adjustment at the factory is to insert special slotted liners behind the poles to modify the saturation characteristics.

GENERAL

The following discussion is designed to aid in restoring the Rototrol to its original condition in the event it somehow has been disturbed or if a replacement Rototrol is being installed.

Before proceeding it might be advisable to review the discussion on the Rototrol found in the regulator manual. As described in the regulator manual the Rototrol supplies all its own excitation with little or no excitation being supplied to the control field from the regulator during steady-state conditions. The self-excitation is obtained from both series and shunt-tuning fields. The shunt-tuning field is connected directly across the output of the Rototrol and may be either cumulative or differential, depending on the strength of the series field. The series effect on all up-to-date designs is obtained from the compensating fields by virtue of their connection with respect to the load current. On some designs where the series effect of the compensating fields is insufficient, a separate series field is also provided.

As described in the regulator manual, when current flows in the control field from the regulator, an unbalance of flux is created between the two south or X-axis poles which generates

operation is based on the fact that the voltage across a rectifier unit remains essentially constant over a wide range of current. The rectifier (R1), in series with a fixed resistor, is connected across the ROTOTROL output. The voltage across this rectifier is compared with the voltage across the section of the potentiometer between the potentiometer tap and the positive line.

3. The drop across any section of the potentiometer will vary with the exciter voltage. When the ROTOTROL armature voltage is such that the voltage across the specified section of the potentiometer equals the voltage across the rectifier (R1), there will be no current through the ROTOTROL control field and thus no tendency to change the ROTOTROL voltage, hence the a-c generator excitation. If the ROTOTROL voltage is low, the voltage drop across the section of the potentiometer is lower than the voltage across rectifier (R1). This will cause a current to flow through the ROTOTROL control field in the "raise" direction as shown in Fig. VR-40 (b). This control field current will cause the exciter voltage to increase, returning it to the original balanced value. An increase in exciter voltage will cause the opposite sequence of events and result in return to normal voltage, see Fig. VR-40 (c).

4. Rectifier (R2) enables the operator to control the a-c generator voltage with reversed polarity on the ROTOTROL.

5. Adjustment of the potentiometer tap permits a change in the exciter voltage. Under manual control the a-c generator voltage can be adjusted to any value from zero to the maximum determined by the saturation of the exciter, which is much higher than required by the specifications.

6. A photograph of the manual control unit is shown in Fig. VR-10, page 405. The two recti-

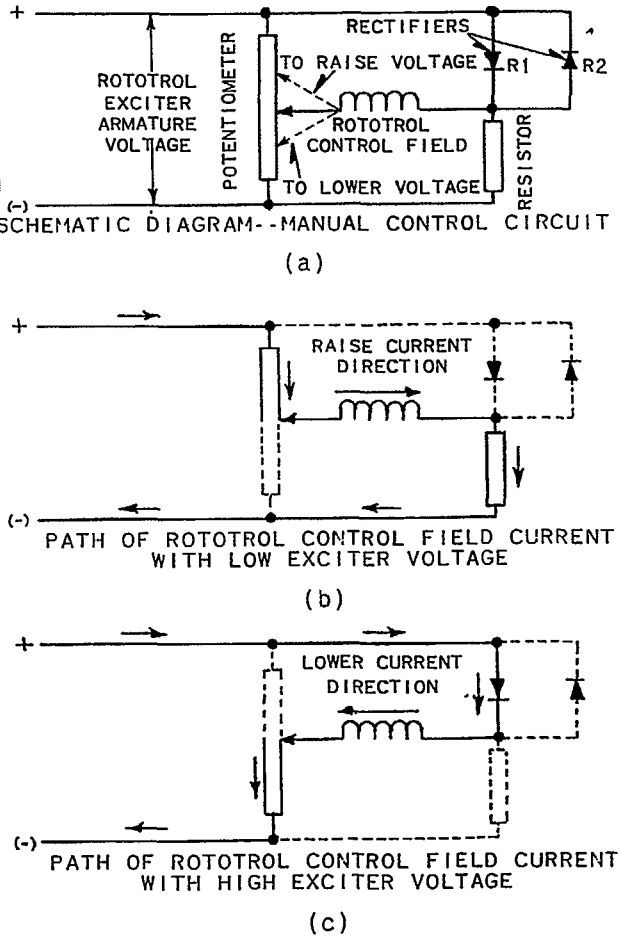

FIG. VR-40 — Schematic Diagrams of Manual Control Unit ("Raise" and "Lower" Conditions)

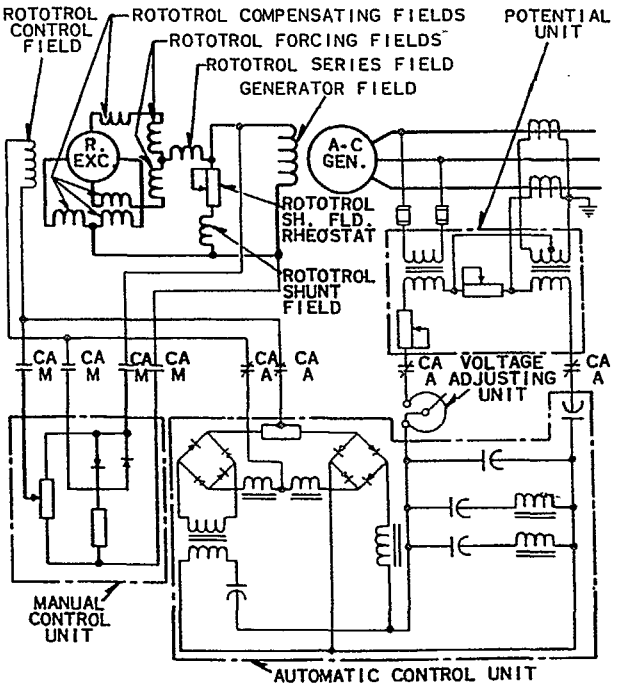

SCHEMATIC DIAGRAM OF VOLTAGE REGULATOR SYSTEM SHOWING MANUAL AND AUTOMATIC CONTROL UNITS. THE REGULATOR CONTROL SWITCH (CA) IS TURNED TO "AUTO" PLACING THE AUTOMATIC REGULATOR IN CONTROL. ALL ENERGIZED CIRCUITS ARE SHOWN IN RED.

FIG. VR-41 — Schematic Diagram Showing Automatic Operation

a difference in voltage between the No. 1 and 3 brushholders and in turn causes a circulating current to flow between these brushholders through the forcing fields. It is possible to obtain this same unbalance of flux on a steady-state basis by unbalancing the X1 and X2 gaps (usually called MP1 and MP3 gaps, respectively) by making one smaller and the other larger. The effect - comparable to a continuous energization of the control field - is cumulative if No. 1 gap is stronger than No. 3 and differential if No. 3 is stronger than No. 1.

It normally is not necessary to unbalance the air gaps, there being enough adjustment in the tapped resistors in series with the shunt tuning field to compensate for slight variations in resistance of the a-c generator field. Occasionally, however, it is not possible to tune the Rototrol because the resistors are at their limit of adjustment. In this case it is found necesary to unbalance the MP1 and MP3 air gaps slightly in order to obtain adjustment with the resistors.

From the regulator manual it is learned that the Rototrol is perfectly tuned when the generated voltage due to the series and shunt-tuning fields is exactly equal to the load voltage for all load points when connected to a constant-resistance load. (In all cases the unsaturated Rototrol is being considered as it is not normally operated beyond the air-gap portion of the saturation curve.) Stated in another way, if the load is increased in steps from zero to some high value the control-field current should not change for any of the steady-state voltage points until the Rototrol starts to saturate. If the control-field current changes in the positive direction for each load point, the Rototrol is said to be undertuned. If the change is in the negative direction it is overtuned, and there might be a tendency toward instability if excessively overtuned. Generally the readings taken within the operating range corresponding to the field current required by the generator from 75 to 125 per cent load are the ones considered. Any irregularities outside the range are not considered serious. These points can be better understood by reference to the following sketch.

Generally speaking, the final setting of the tuning resistors should be determined when the equipment, particularly the generator field, has reached operating temperature. This means, of course, that when the unit is started up cold it will be somewhat overtuned since the generator field resistance will be low. This is not objectionable so long as there is no instability.

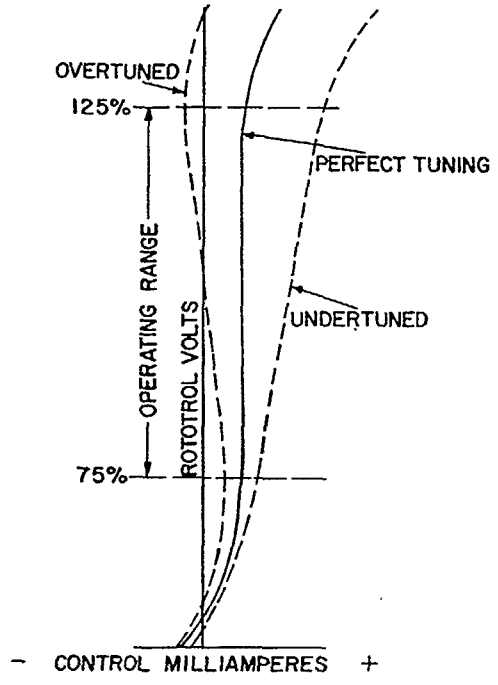

FIG. R-1 — Typical Tuning Curves for Rototrol-Exciter (Westinghouse Drawing TP-56-168)

If this is objectionable it can be corrected by tuning the Rototrol at some resistance load value between cold and hot, which means that the Rototrol will be slightly undertuned at operating temperature. Judgement must be exercised here as to what the best setting should be.

MECHANICAL LINE-UP

The first move to be made in adjusting the Rototrol is to balance the air gaps mechanically.

1. Line up the magnetic centers by moving the frame axially to the point where the center of the main poles lines up with the center of the armature core.

2. The Rototrol-exciter frame must be adjusted to center the armature axis of rotation in the space between opposing main poles. This should be accomplished as follows:

a. Adjust the frame vertically to obtain equal air gap within .005 inch at the center of the vertically located main poles.

b. Adjust the frame horizontally to obtain equal air gaps within .005 inch at the center of the horizontally located main poles.

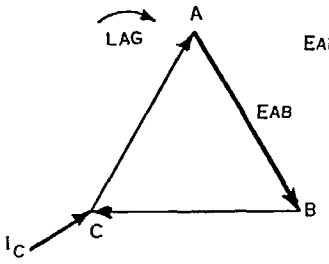

VECTOR DIAGRAM OF A-C GENERATOR VOLTAGE SHOWING THE POSITION OF PHASE (C) CURRENT AT UNITY POWER FACTOR

(a)

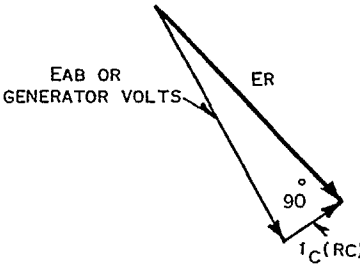

I_C(RC) = VOLTAGE DROP ACROSS RESISTOR RC ENERGIZED BY PHASE C CURRENT SHOWN AT UNITY POWER FACTOR LOAD IN THE DIAGRAM. IT IS SHOWN EXAGGERATED FOR CLARITY.

ER = VOLTAGE TO WHICH REGULATOR RESPONDS AND WHICH IS HELD CONSTANT IN MAGNITUDE

VECTOR DIAGRAM SHOWING REACTIVE DROOP COMPENSATOR DROP AT UNITY POWER FACTOR

(b)

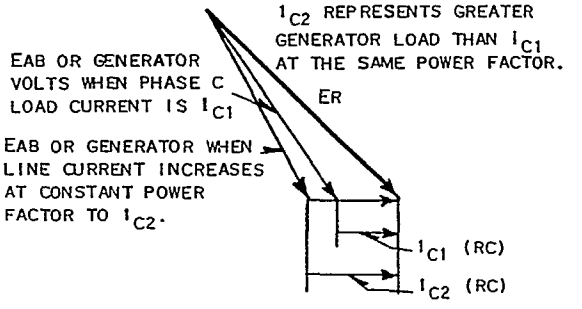

VECTOR DIAGRAM SHOWING OPERATION OF THE REACTIVE DROOP COMPENSATION AS GENERATOR LOAD CURRENT CHANGES AT CONSTANT POWER FACTOR.

(c)

h. In the "WRN-11" the reactive-droop compensator is the resistor (RC) in the potential unit. To introduce droop in the generated voltage with an increase in lagging load current, the contacts (CC) are closed, which shorts out resistance. The resistor drop I_c (RC) is subtracted from the line voltage as explained in paragraph c-3c, page 421. Thus, shorting out a portion of (RC) has the effect of adding a resistance drop to the line voltage.

d) Manual Control Unit

1. The manual control unit provides an alternate method of a-c generator voltage control. It will maintain essentially constant excitation voltage. For a constant a-c generator load, this will result in constant a-c voltage. Load changes will require adjustment of the manual control unit to provide constant output voltage.

2. The circuit of the manual control unit is illustrated in Fig. VR-40 (a). The principle of

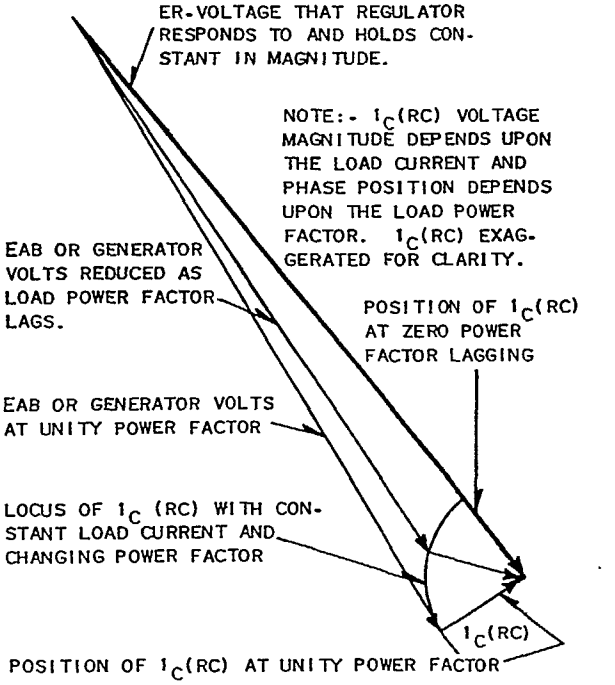

VECTOR DIAGRAM SHOWING OPERATION OF THE REACTIVE DROOP COMPENSATOR AS THE GENERATOR LOAD POWER FACTOR CHANGES AT CONSTANT LOAD CURRENT

(d)

FIG. VR-39 — A-C Generator Vector Diagrams (showing various power factor conditions)

c. Re-check the vertical adjustment as in 2.b.

3. When measuring the single air gaps for the above adjustments:

a. Use a narrow feeler gage and select one armature tooth at the front end of core and one armature tooth at the rear end of core for use in taking all measurements at the respective ends of armature core.

b. Rotate the armature to place the specified tooth under the center of the main pole at which the air gap is to be measured. It is important that the main pole centers be established in a uniform manner so that true corresponding positions are used. The shape of the main pole face creates a tapered air gap.

c. Check the air gaps at both front and at rear to assure that the frame is square with respect to the axis of rotation.

After the gaps have been lined up and shims are in place under the feet, fasten the Rototrol to the bedplate with temporary bolts.

CAUTION: Under no condition should the body-bound bolts be fitted in until all tests have been completed and the Rototrol is operating satisfactorily.

TUNING PROCEDURE

Refer to the tuning test connection schematic diagrams following this discussion. For the purpose of this discussion the main poles will be designated as MP1, MP2, MP3 and MP4 corresponding to the position of the brush arms carrying the same numerical designation as shown on the attached schematics.

This procedure is to be followed only after the mechanical line-up has been completed per the previous instructions.

1. Check the Master Plan Drawing for proper direction of rotation and connect the test equipment in the Rototrol-Exciter circuit per the appropriate attached schematics.

2. Set speed of equipment to normal operating speed with the control field potentiometer set at zero Rototrol-Exciter output voltage.

3. Check brushes for a good seat.

4. Slowly raise the output voltage in 20 volt steps by moving the potentiometer contact away from zero voltage position. Note reading of milliammeter at each point after it has come to rest. (Note that while the potentiometer is being moved in the "raise" direction there will be a momentary swing of the milliammeter in the positive direction the magnitude of which depends on how fast the potentiometer is moved. The swing will be in the negative direction when the potentiometer is being moved in the "lower" direction.)

5. If the steady-state readings of the milliammeter remain relatively constant for each step, the Rototrol is considered tuned. If the readings do not remain constant, proceed to adjust as follows:

a. Continually Increasing Readings

Rototrol is undertuned. There is insufficient self-excitation within the Rototrol. Adjust resistors in series with shunt tuning field to strengthen it if cumulative or weaken it if differential. Consult Master Plan Drawing and compare with connections as found on the Rototrol to determine if the shunt tuning field is cumulative or differential. This connection is made at the factory and sometimes changed at installation and therefore may not be the same for all units on the same order.

b. Continually Decreasing Readings

Rototrol is overtuned. There is too much self-excitation within the Rototrol. Adjust tuning resistors opposite to 5.a., above.

c. If the limit of adjustment of the resistors is reached (either all in or all out) and the Rototrol is still not tuned, it will be necessary to unbalance the MP1 and MP3 air gaps slightly by moving the frame horizontally one way or the other. If undertuned, move the frame in the direction to decrease the MP1 gap and open the MP3 gap, and vice versa if overtuned. Shift the frame only a few thousandths as a slight shift will have a very marked effect.

CAUTION: Always shut the unit down when making adjustments.

6. If there is instability present the Rototrol should be undertuned slightly by adjusting as in 5.b.

7. Perfect tuning is operation where an increase in output voltage causes no steady-state increase or decrease in control field current. The tuning for the Rototrol-Exciter should be judged in the range from 75% to 125% of the

3. With the voltage adjusting rheostat, the resistance between the generator terminals and (V-47 to V-48) can be changed, causing a proportional change in voltage drop. This drop necessitates a change in the a-c generator voltage to produce the required voltage across (V-47 and V-48). Thus, the a-c generator voltage can be set to any operating value, by adjusting the rheostat.

c) The Potential Unit

The potential unit receives its energy directly from the a-c generator bus. The unit consists of the following parts:

1. THE POTENTIAL TRANSFORMER

The potential transformer (P.T.) is a two-winding transformer that supplies energy to the entire circuit.

2. THE VOLTAGE ADJUSTING RESISTOR

The voltage adjusting resistor, (RV) performs electrically the same as the voltage adjusting unit explained in Paragraph b, page 420. It permits adjustment of the generator terminal voltage to the minimum desired value with the voltage adjusting unit shorted. It thus determines the location of the range of a-c generator voltage adjustment.

3. POSITIVE-SEQUENCE FILTER FOR THREE-PHASE RESPONSE

a. The automatic control unit used in the "WRN-11" regulator responds to single-phase voltage. Since the a-c generator load is frequently not balanced between the three phases the voltage drops in the windings may be different, thus, its three terminal voltages are not always equal. If the automatic control unit were connected across one phase of the generator only, that phase would be regulated for constant voltage. The other phase voltages would differ by the amount of the unbalance. In the "WRN-11" voltage regulator, a single-phase voltage is used but a correction is introduced to compensate for unbalance. The resultant voltage which is measured by the regulator may be considered as being proportional to a balanced three-phase voltage, called "positive-sequence voltage". This is the voltage actually generated in the machine windings.

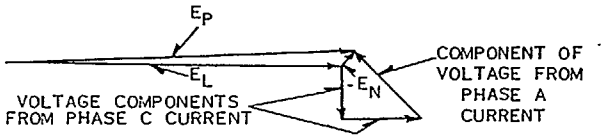

E_L = GENERATOR LINE VOLTAGE CONTAINS BOTH POSITIVE AND NEGATIVE SEQUENCE VOLTAGES THAT IS $E_L=E_P+E_N$.

E_P = POSITIVE SEQUENCE VOLTAGE IS OBTAINED BY SUBTRACTING E_N FROM E_L OR $E_P=E_L-E_N=E_P+E_N-E_N=E_P$.

CURRENT-PRODUCED VOLTAGE DROPS YIELD $-E_N$, THE REVERSE NEGATIVE SEQUENCE VOLTAGE. THE REVERSE VOLTAGE IS OBTAINED BY SELECTING THE PROPER CONNECTIONS. THEY ARE EXAGGERATED ON THIS DIAGRAM FOR CLARITY.

FIG. VR-37 — Vector Diagram of Positive-Sequence Filter

b. Fig. VR-34 shows the two current transformers which energize the mutual reactor (F.R.) and resistor (RC). These elements are connected in series with the potential transformer (P.T.) to form a positive-sequence filter. Thus the voltage across (V8-V27) is proportional to the positive-sequence voltage of the generator and is not affected by voltage unbalance. This makes the regulator sensitive to the three-phase voltage rather than to only a single-phase voltage.

c. The mutual reactor (F.R.), as seen in Fig. VR-34 has a winding that is energized from both the (A and C) phase-current transformers. The flux produced by this current-transformer-energized winding induces a voltage in the other winding between (V17 and V27). This induced voltage is added to the drop in resistor (RC). Their sum is proportional to the negative-sequence voltage at the generator terminals (See Fig. VR-37). The negative-sequence voltage is the component of the three-phase voltage which represents the unbalance in voltage resulting from load unbalance. It is subtracted from the generator voltage to give the positive-sequence voltage across (V8-V27).

4. PARALLEL OPERATION OF A-C GENERATOR

a. When generators are operated in parallel their kilowatt-load division will depend upon the prime movers. The reactive-load division will depend upon their field excitation or, in other words, their automatic regulators when they are used.

b. The condition existing on two similar generators with unequal field currents is that the generator with the higher field current will have a greater voltage induced in its windings. If they are in parallel, the higher-voltage machine will force a current through the windings of both machines. This current, limited primarily by the impedance of the windings which are

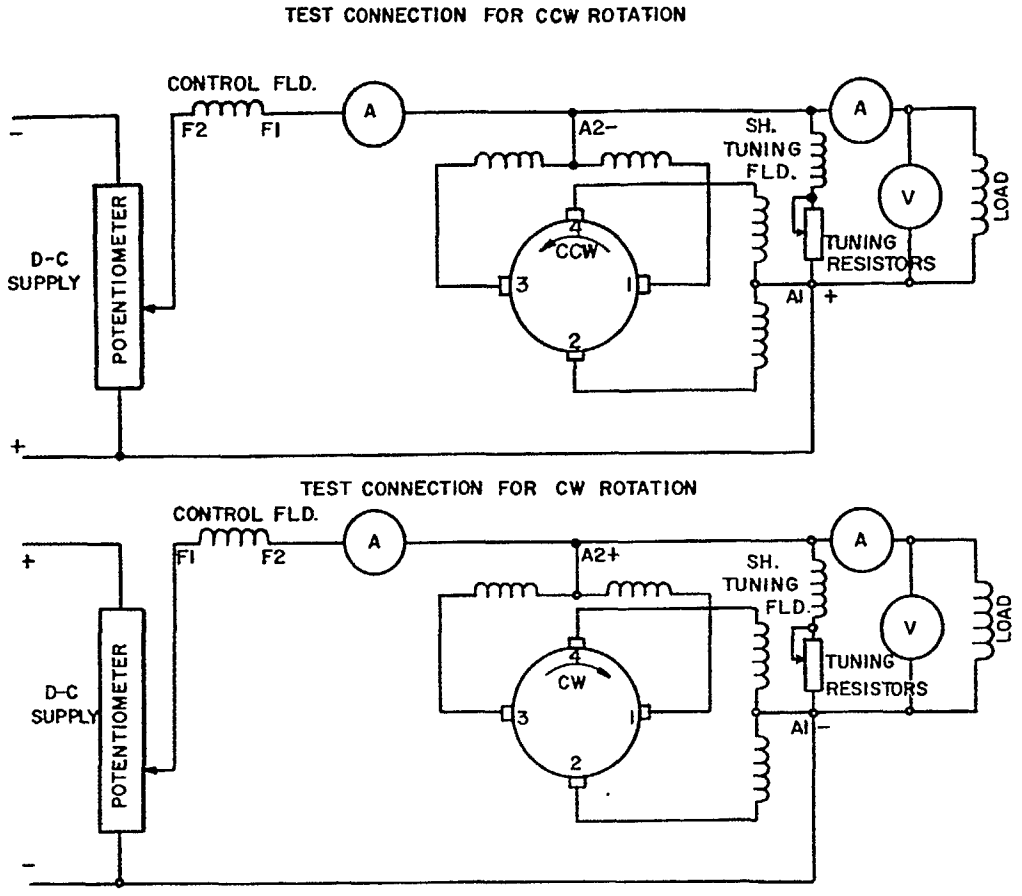

NOTE: THE 400 OHM ADJUSTABLE RESISTOR IN THE CONTROL FIELD CIRCUIT MUST BE OUT OF THE CIRCUIT FOR EITHER TEST CONNECTION

CONTROL FIELD (F1-F2) AMMETER - 0 TO 150 MILLIAMPERES (WITH ZERO CENTER IF POSSIBLE, OR USE TWO REGULAR MILLIAMMETERS CONNECTED "BACK-TO-BACK" SO THAT ONE WILL READ POSITIVE AND THE OTHER NEGATIVE.)
AC GENERATOR FIELD AMMETER - 0 TO 150% FL CURRENT
AC GENERATOR FIELD VOLTMETER - 0 TO 150% FL VOLTAGE
DC SUPPLY - 150% OR MORE OF FL VOLTAGE

FIG. R-2 — Test Connections Rotation with Cumulative Field (Westinghouse Drawing TP-56-169)

output necessary to maintain rated output of the a-c generator.

8. In taking readings to check the tuning it is important to start from zero each time. With good tuning, the control field current should not decrease as the voltage is raised through the range from 75% to 125% output and it should increase a minimum amount.

9. The mechanical air gap deviation from normal should be limited to 25% of the average single air gap.

10. Reconnect control field to the regulator and proceed per the regulator instruction book.

11. If there are signs of unstable operation with the regulator on automatic control, try to reduce it by adjusting the 400-ohm resistor in the control field circuit in accordance with the regulator instructions. If the instability remains even with this resistor at maximum, undertune the Rototrol slightly as in 5.b.

12. Operation at final operating temperature is generally with the Rototrol-exciter slightly undertuned.

corresponding change in the voltage drop across them. This change in voltage drop added to the line voltage of varying frequency impresses the correct voltage in the voltage-sensitive circuit for that frequency.

d. Fig. VR-35 (a) shows the circuit elements lumped in boxes. This is done for convenience in showing the vector diagram to explain the frequency compensation more rigorously.

e. The vector diagram of Fig. VR-35 (b) includes the three conditions of low, normal and high frequency. The voltage across the voltage-sensitive network is used as the reference voltage. Its variation with frequency is clearly shown on this diagram. The capacitor and reactor vectors change in length with frequency as explained above.

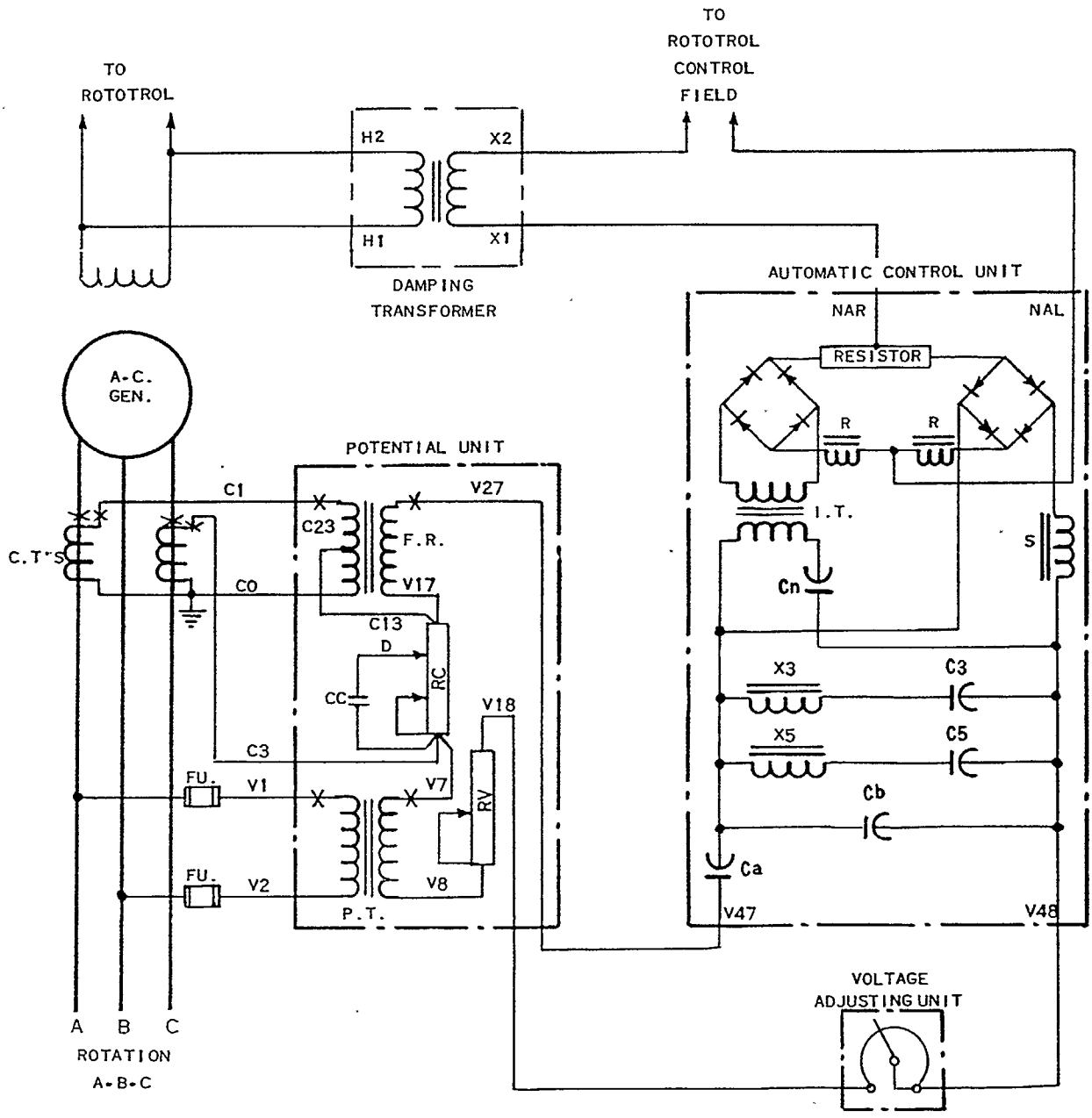

FIG. VR-34 — Schematic Diagram of Regulator

SECTION 4—OPERATION OF ROTOTROL-EXCITER

BEFORE STARTING

Check to see that all connections are made and all joints are tight. Examine the brushes and brushholders. The brushes should be free to slide in the holders and should be bearing against the surface of the commutator. If any broken brushes are found, they should be replaced. (See instructions under "Maintenance"-Brushes.) The holders should provide approximately 2-1/2 psi pressure and should be located 1/16-inch to 1/8-inch from commutator surface. If brush rig has been disturbed during installation, it should be returned to the correct position as set at the factory and which is marked by means of a dowel bolt. Always keep the rig in this position. Examine air gaps and remove any foreign material found therein.

STARTING

Consult regulator portion of manual before starting. On initial starting, proceed slowly and note especially any evidence of rubbing. Follow procedure outlined in regulator portion of manual.

incide on the vector diagram. However, should (e_s) become larger than (e_n), (c) and (g) would no longer coincide as is indicated by the dashed voltage gradient line. In this case (g) will be positive with respect to (c). The reverse will occur with a lower voltage on (e_s) than on (e_n).

3. THE AUTOMATIC CONTROL CIRCUIT

The automatic control circuit, Fig. VR-33 is a combination and modification of the circuits shown in Figs. VR-30 and VR-32 (a). The elements added are:

a. An Insulating Transformer I.T. (shown in the capacitor branch).

This transformer is necessary in one branch since the d-c rectifier terminals are connected together, and a common a-c source is used for both branches of the circuit. If this transformer were not used, it would be possible to have a near short-circuit across the a-c line. The current under this condition would be limited only by the forward resistance in two rectifier legs plus the small resistance in one side of the d-c circuit. The use of this transformer isolates the a-c line from the rectifier in one branch. This eliminates a metallic path between the two a-c lines through the rectifiers.

b. The Reactors (R) (in the d-c circuit).

Their purpose is to reduce the a-c ripple in the d-c voltage.

c. The ROTOTROL Control Field.

This field raises or lowers the exciter output voltage. The control field is connected across terminals (NAR) and (NAL) of Fig. VR-34 which corresponds to (c) and (g) of Fig. VR-32 (a). The performance of the circuit can be explained for the following three conditions.

1. With the a-c voltage at a value corresponding to (E) of Fig. VR-31 on the a-c line terminals, no d-c voltage will appear across the ROTOTROL control field and thus no corrective action will result.

2. With high a-c voltage, say (E+V), on the line terminals, (NAL) will be positive with respect to (NAR) and will pass a current through the ROTOTROL control field in the "lower" direction. In other words, the "lower" current of Fig. VR-33 exceeds the "raise" current. This will be in the direction to cause the generator field excitation to be lowered and thus restore generator voltage to its proper value.

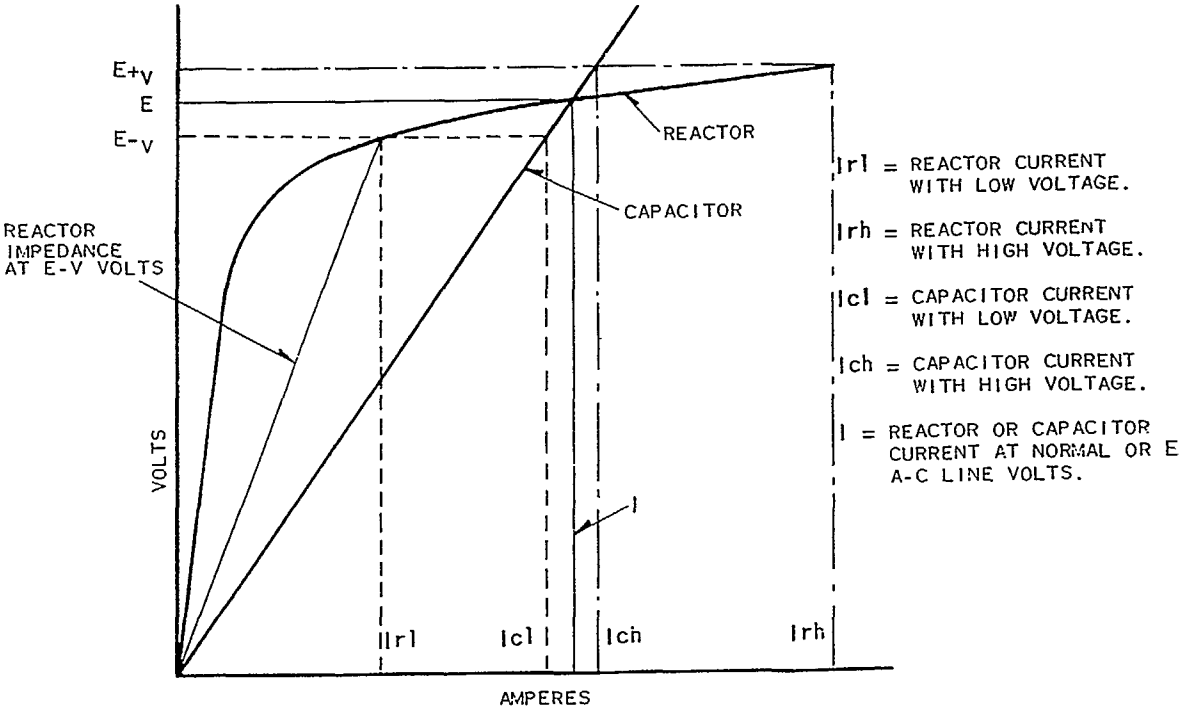

FIG. VR-31 — Volt-Ampere Characteristics of a Capacitor and a Saturated Reactor

SECTION 5—MAINTENANCE

DIRECT CURRENT ROTOTROL EXCITER

General

To obtain long, satisfactory service from direct-current generating equipment, it is necessary to install, operate and maintain such equipment properly. The following gives the simple precautions and instructions for such care. Properly maintained generators and exciters will require very little care other than periodic inspection. The most important factor is to keep the apparatus clean and free of oil, water and other foreign particles.

Insulation

Keep machine free of dirt, oil and water at all times. The greatest enemy to coil insulation is dirt and, if the equipment is kept clean, little trouble will result. The best way to check for excessive dampness in the windings is to make an insulation resistance measurement. This can be done directly by a "megger". If a megger is not available, the measurement can be made using a 100 to 500 volt direct current (the higher voltage available, the more accurate the results) and a direct-current voltmeter, of which the resistance in ohms is known (generally marked on label inside the instrument cover).

The method of making a resistance measurement with a voltmeter is to read the voltage of the line first, then connect the resistance to be measured in series with the voltmeter and take a second reading.

The measured resistance is calculated from the formula:

$$R = \frac{r\,(V-v)}{v} \text{ or } \frac{r}{v}\,(V-v)$$

V = First voltage reading
v = Second voltage reading
R = Resistance of insulation in ohms
r = Resistance of voltmeter in ohms

If a grounded circuit is used in making this measurement, care must be taken to connect the grounded side of the line to the frame of the machine. The voltmeter should be connected between the windings and the other side of the circuit.

The insulation resistance with the machine cold (at room temperature) should not be less than one megohm (1,000,000 ohms); when the windings are hot, it should not be less than:

$$\frac{3\ (\text{rated voltage})}{\text{KW plus } 1000} \quad \text{(In Megohms)}$$

If the resistance is low, the equipment should be dried out before it is started into regular service.

Methods of Drying

There are three general methods of drying the insulation windings:

External Heat
Internal Heat
A combination of External and Internal Heat

Where it is possible to have apparatus dried under vacuum while hot, this is, of course, an extremely effective process.

DRYING WITH EXTERNAL HEAT

It is extremely important that the insulation of new electrical apparatus should be protected against moisture after the apparatus has arrived at its destination. The most satisfactory procedure is to maintain the insulated parts and the air immediately surrounding them at a temperature of 15° to 25°C higher than the general air temperature of the room in which the apparatus is located, but not less than 40°C, actual temperature. This procedure will not only keep dry all insulation that is dry when the apparatus is received, but it will dry off surface moisture that may have accumulated during shipment of the equipment.

The method of producing and applying the heat will depend on many and widely varying conditions. Seldom will conditions be found ideal and, consequently, the problem of drying may often require on the part of the operator a great deal of ingenuity and resourcefulness. Since much damage can be done by the misapplication of heat to the windings of electrical apparatus, it is of paramount importance that this type of work be entrusted to competent persons only.

The application of heat to the windings should in no way injure the insulation by overheating it, nor should it be applied so rapidly that internal vapor pressures will be developed sufficiently to form pockets, or to rupture the insulation. Furthermore, it is essential that

build up only a short way on the curve of Fig. VR-24 (b). Thus, the greater the inductance of a reactor, the lower will be the current resulting from a certain alternating voltage.

5. Another feature is that as the frequency is increased, less time is allowed for the current to rise. Thus, the higher the frequency the greater the opposition to current flow or the greater the inductive reactance.

6. To review, the inductive reactance of a reactor depends upon the inductance and the frequency. The manner in which the inductive reactance varies with inductance and frequency is shown in Fig. VR-24 (c).

7. Fig. VR-24 shows a typical reactor. The coil and iron are indicated as are the leads used for circuit connections.

c. *Saturated Reactor*

1. A reactor that has an iron core will have much more inductance than the same coil without the iron. However, if the voltage across the reactor coil is increased, the current through the coil and the voltage across it will be proportional only for a limited range. Fig. VR-26 (a) shows a circuit that may be used to investigate the relationship between voltage and current of an iron core reactor. As the voltage (E) of this figure is varied, the voltmeter and ammeter are read and recorded. Fig. VR-26 (b) shows a typical curve determined in this manner.

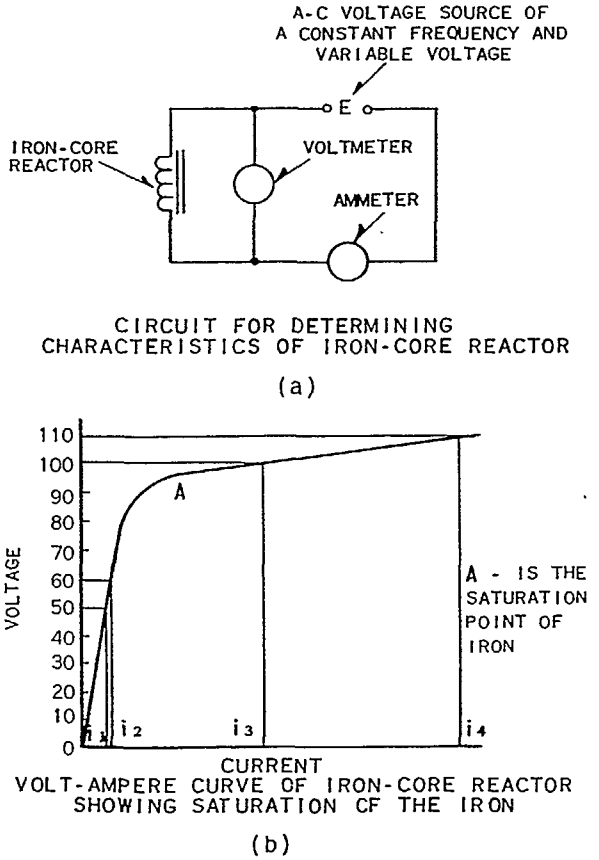

FIG. VR-26 — Characteristics of an Iron-Core Reactor

2. This reactor has an unusual property in the saturated region. Here a slight change in voltage will result in a large change in current. This is indicated on Fig. VR-26 (b). Thus a change in voltage from 50 to 60 per cent results in a small change in current flow from i_1 to i_2. An equal change in voltage from 100 to 110 per cent will result in a current change from i_3 to i_4 which is much greater than the change from i_1 to i_2. This property is utilized in the regulator as will be shown later.

3. The saturating reactor used in the regulator is shown in Fig. VR-27.

d. Rectifier

1. The control field of the ROTOTROL exciter requires a direct-current voltage to control the exciter output. Since the regulator is energized entirely by alternating current, a device for changing alternating current to direct current is necessary. This device is a rectifier.

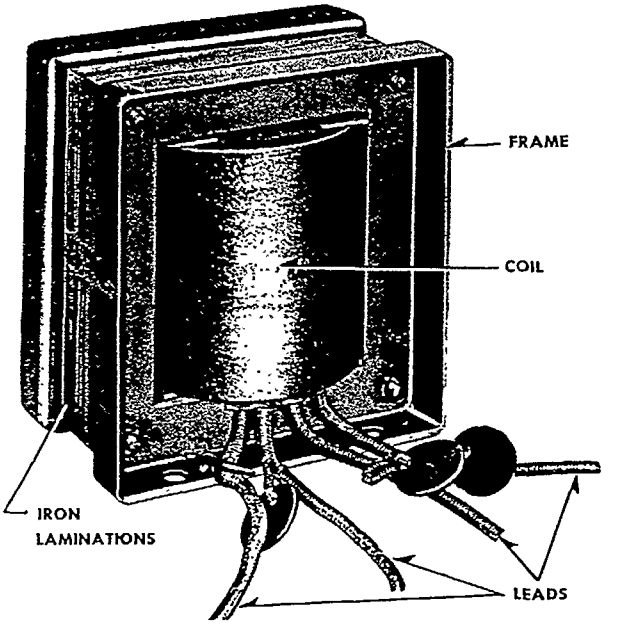

FIG. VR-27 — Saturating Reactor

adequate provision be made for the circulation of hot air within the apparatus being dried and that openings for the escape of moisture-laden air and of gases be made at the top of the enclosure.

WITH STEAM HEAT

Where low pressure steam is available, radiators, or steam pipes placed below the end windings of a stator will provide safe and easily controlled heat. The enclosing parts should be set up against the frame, or a temporary enclosure should be used. There should always be ventilating openings at the top of the machines to provide for the escape of moisture.

WITH FORCED AIR

Hot air may be forced, or blown, through electrical apparatus to dry its insulation. The air may be heated by steam coils, in hot air furnaces, by electric heaters, or by open fires. Although it will remove surface moisture quickly, generally this method is inefficient and costly, unless a blower and air duct have been provided for the permanent installation and there is ample space to locate a heating unit in the duct.

WITH ELECTRIC HEATERS

External drying of the insulation of electrical rotating apparatus by electric heaters distributed under the end windings is strongly recommended. Space heaters are most convenient for this purpose.

DRYING WITH INTERNAL HEAT

The coil insulation of wound electrical apparatus may be dried by circulating current through the windings. Internal heat can be developed in this way without subjecting the insulation to voltages that might damage it during the drying operation. The procedure will depend upon the type of apparatus to be dried and on the facilities available for producing or applying the current.

There is always danger of serious injury to the windings when drying the insulation with current, since the heat generated in the inner parts is not readily dissipated; furthermore, coils containing moisture are much more susceptible to injury from overheating than they are when thoroughly dry. Gases and vapor generated within the insulation by high temperature may develop such pressure that they are forced through the insulation, breaking the continuity of the layers or actually rupturing the material. This method should be followed only under competent supervision.

The drying should be continued until the insulation resistance has dropped to a minimum and has then increased until at least one megohm for each 100 volts operating voltage is indicated, but, in no case, less than one megohm, regardless of voltage. It may then be desirable to maintain the temperature at from 15° to 25° above ambient until ready for operation.

Usual Causes of Poor Performance

SPARKING AT THE BRUSHES

Sparking at the brushes may be due to any of the following causes:

1. Rough or Dirty Commutator

A rough or dirty commutator produces sparking, because it prevents a good contact between the brushes and commutator. The remedy is to clean the commutator if it is dirty and smooth the commutator if it is rough. The commutator may be cleaned by using a silken rag that has been dipped in kerosene and thoroughly wrung out. Resurfacing of a commutator should always be done with a grinding rig, whether it is to be ground concentric or in order to remove high bars or flat spots. A hand stone should never be used on a commutator to obtain a true surface, because it simply follows the irregularities in the surface and, in some cases, may even exaggerate them. The grinding rig consists of an abrasive stone set up similar to a lathe tool in a rigging or carriage which may be moved back and forth in an axial direction and equipped with a radial feed. It should be supported very rigidly so that the stone is subject to a very minimum of vibration.

Grinding should be done when the machine is running in its own bearings at rated speed. Great care must be exercised to prevent copper and stone dust from entering the windings. The grinding rig should be equipped with a vacuum cleaner arrangement fitted over the stone to catch all dust.

The stones used in grinding commutators might be classed as rough, medium and fine. The rough stone has a grit of about 80 mesh and is used only where a very large amount of copper is to be removed. It should be used very seldom because if sufficient copper is to be removed to warrant its use it would be better

tive brushes. This current flowing through the forcing fields on all four poles raises the flux, and thus the ROTOTROL exciter output voltage. When the a-c generator field current has been raised to the proper value, producing normal a-c generator voltage, the output of the regulator to the ROTOTROL control field will decrease to approximately zero. As a result, the forcing field current will also fall to a small value. The ROTOTROL series and shunt self-energizing fields will sustain the output voltage at the new condition.

4C3. VOLTAGE REGULATOR

a) Automatic Control Unit

The automatic control unit will be explained first because it is the voltage-sensitive element and this is the heart of the regulator.

1. FUNDAMENTAL CONCEPTS

A review of some of the basic parts used in building up an electrical device will be included here to assist in comprehending the automatic regulator operation.

a. Capacitor

1. A capacitor is made up of two conducting surfaces separated by an insulator called a "di-electric". A property of a capacitor is that even though no current can flow through it, it can absorb and hold a charge or quantity of electricity. Thus, when a direct-current voltage is applied across a capacitor, a current will appear to flow for a short time. This current is called the charging current (see Figs. VR-22 (a) and (b)). The magnitude of this current will depend upon the physical properties of the capacitor such as size of plates, their separation, the material used for a dielectric, etc., and of course, the voltage applied. These physical properties determine the characteristic known as capacitance. Capacitance will be discussed more latter.

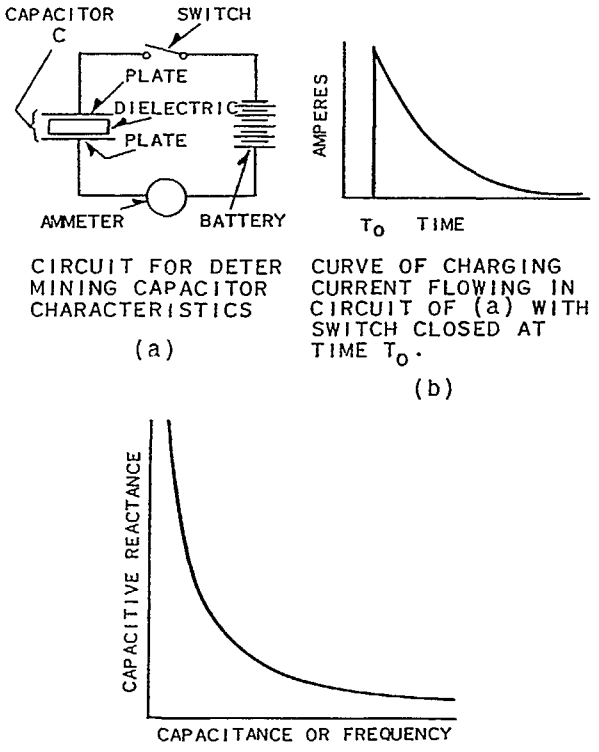

CIRCUIT FOR DETERMINING CAPACITOR CHARACTERISTICS

(a)

CURVE OF CHARGING CURRENT FLOWING IN CIRCUIT OF (a) WITH SWITCH CLOSED AT TIME T_0.

(b)

CURVE SHOWING HOW THE REACTANCE OF A CAPACITOR VARIES WITH CAPACITANCE OR FREQUENCY.

(c)

FIG. VR-22 — Capacitor Characteristics

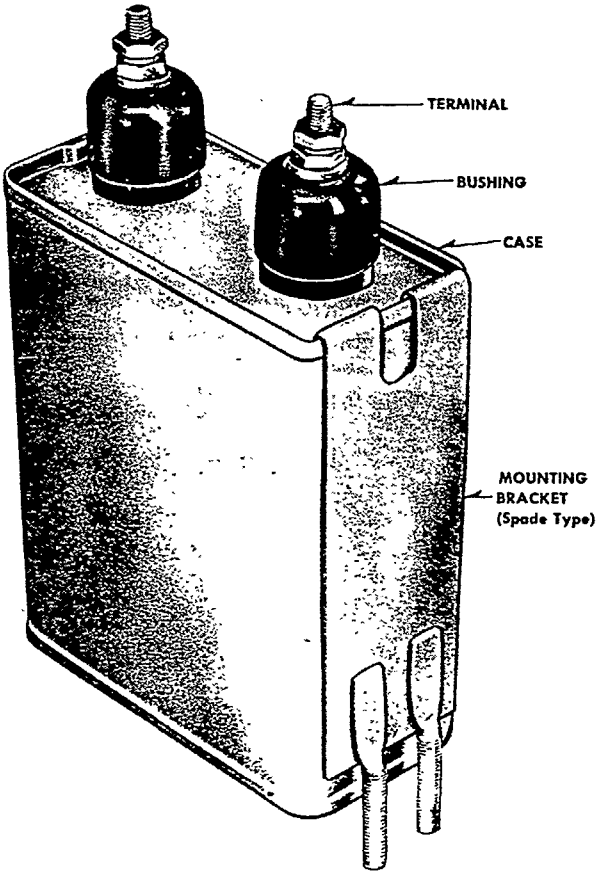

FIG. VR-23 — Capacitor

to take a cut off the surface in a lathe. The medium stone has a grit of about 120 mesh and is used for the bulk of the grinding work, the fine stone being used only to obtain a fine finish. The fine stone should have a grit of about 200 mesh.

After grinding all commutator slots should be cleaned out thoroughly and the edges of the bars beveled. This beveling accomplishes two things: it removes the burrs caused by the stone dragging copper over the slots, and eliminates the sharp edge at the entering side of the bar under a brush. The bevel on the bars is done with a special beveling tool and should be about 1/32 chamfer at 45° for medium thickness of bars. If it is apparent that enough copper is going to be removed by grinding so that the undercutting will be shallow, the commutator should be re-undercut before grinding. This is done by means of a small circular high speed saw about .003 inch thicker than the normal thickness of the mica. In undercutting, great care must be taken to see that a thin sliver of mica is not left against one side of the slot. Sometimes this sliver must be removed by scraping by hand.

After grinding, undercutting the mica, and beveling the edges of the bars, the commutator surface should be polished while operating at rated speed. Aloxite or sandpaper should be used first (never emery cloth or paper) to remove the burrs due to beveling. After a very fine grade of sandpaper has been used, a high polish can be obtained by burnishing with dense felt or canvas.

2. Incorrect Setting of the Brushes

The brushes may have been shifted. The correct brush position has been located at the factory and the rocker ring is locked and doweled to the frame to prevent movement. The brushholder should be adjusted to be approximately 1/16 inch from the face of the commutator, but should not be more than 1/8 inch from the face of the commutator.

3. Incorrect Spacing of the Brushes

Spacing of brush arms, as measured from the edges of the brushes, must be uniform around the commutator. This adjustment is made as the machine is assembled, but it sometimes needs to be checked, if commutation is poor or if brush arms have been disturbed by rough handling. The best method of making this check is to stretch a strip of paper around the commutator under the brushes, allowing the ends to overlap. The paper should be smooth and parallel with the edge of the commutator at all points. A fine, clear mark is made on the paper with a hard, sharp pencil exactly at the toe of each brush. The paper is removed and the spaces between marks are measured. If the measurements are not all the same, they show which arms are incorrectly spaced and in what direction to move them to make the spacing correct. After the arms are adjusted, the spacing should be rechecked by the same method. The difference in spacing never should be more than 1/32 inch.

4. Poor Brush Fit

The ends of all brushes should be fitted to the commutator so that each brush makes good contact over its entire bearing face. This can best be accomplished after the brushholders have been adjusted and the brushes inserted. Lift a set of brushes sufficiently to permit a sheet of sandpaper to be inserted. Draw the sandpaper in the direction of rotation under the brushes releasing the pressure as the paper is drawn back. Be careful to keep the ends of the paper as close to the commutator surface as possible as this will avoid rounding the edges of the brushes. It will be found that by this means a satisfactory contact is quickly secured. Use sandpaper "Grade 1-1/2" for the roughing cut, and "Grade O" for the final fit.

5. Incorrect Brush Pressure

Springs of brushholders must be adjusted so that the pressure on all brushes is uniform. From two to 2-1/2 pounds per square inch is a fair value for the average machine. In general, the tension should be as light as possible and still maintain proper contact with the commutator. The required pressure should be obtained with the lever of the spring in either the lowest or next to lowest notch. Brushes must not only fit their holders snugly, but also must slide freely at all points. Movement of brushes in holders must be as small as possible and still avoid binding.

6. Brush Wear

Brushes may have worn so much as to reach the end of travel of the pressure spring. The brushes should then be replaced.

7. Brush Sticking

Brushes may be sticking in the holders. This would prevent the brush from following the commutator surface. To correct this, take the brush from the holder and clean the brush

to energize another special field called the "forcing field". This field is shown in Fig. VR-20 (b). It acts to increase the flux in each pole, or decrease the flux in each pole, depending upon the polarity of the control field. In Fig. VR-20 (b) it is shown as increasing the flux in each pole, thus raising the generated voltage.

h) The flow of forcing current through the armature winding causes an armature reaction reducing flux in one north pole and increasing flux in the other. This causes a voltage to be generated between the negative brushes. If unopposed, the resulting current flow between the two negative brushes, would cause an armature reaction in opposition to the control field. This opposition would greatly reduce the effect of the control field if not compensated for in some way. The coils shown in series with forcing fields in Fig. VR-20 (c), called "compensating coils", oppose this armature reaction due to forcing current. The compensating coil fields then act to hold the voltage between the negative brushes, and the armature reaction which would oppose the control field, to a minimum.

i) A group of fields are connected in series between the negative brushes. They are compensating fields that operate similarly to the compensating fields mentioned above. They are shown in Fig. VR-20 (d).

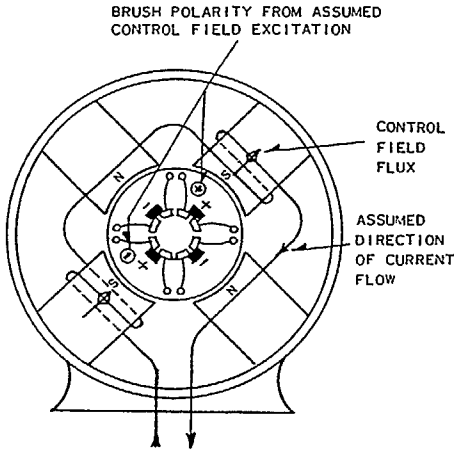

ROTOTROL EXCITER CONTROL FIELD WINDING

(a)

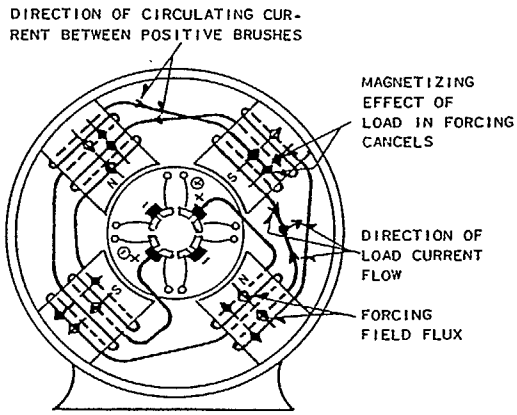

ROTOTROL EXCITER FORCING FIELDS CONNECTED IN SERIES BETWEEN THE POSITIVE BRUSHES

(b)

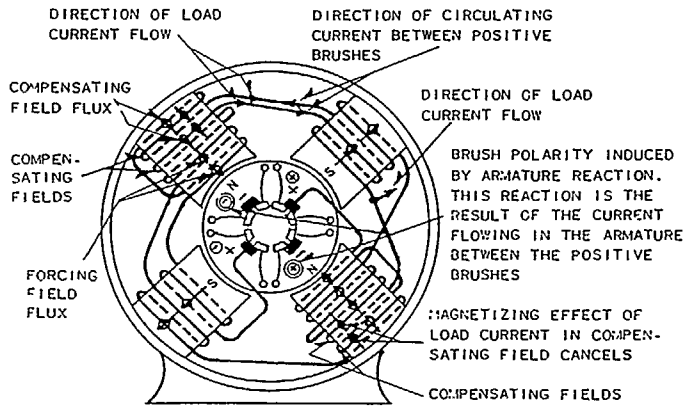

ROTOTROL EXCITER FORCING AND COMPENSATING FIELDS CONNECTED IN SERIES BETWEEN THE POSITIVE BRUSHES

(c)

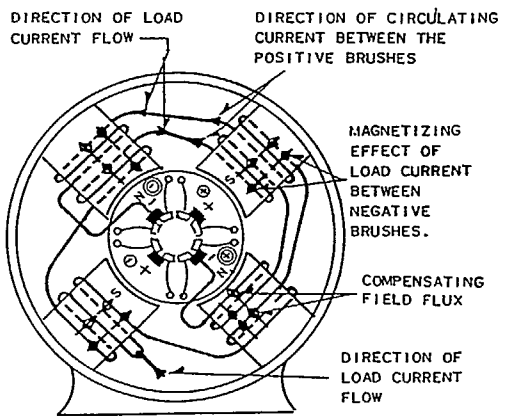

ROTOTROL EXCITER COMPENSATING FIELDS CONNECTED IN SERIES BETWEEN THE NEGATIVE BRUSHES

(d)

FIG. VR-20 — Field Winding of ROTOTROL Exciter

and holder as grease and grit may have worked in to prevent free movement.

8. Machine Overload

Machine may be overloaded. Check meters to determine whether or not machine is operating at a load above its nameplate reading.

9. High or Loose Commutator Bar

Commutator bar may be high or loose. If bar is loose, commutator must be tightened. Tightening of a commutator should never be undertaken by inexperienced personnel.

A high commutator bar must be turned down in an engine lathe, or ground as covered in Paragraph 1, of this subdivision.

10. High Mica on Commutator

Mica should be undercut as explained in Paragraph 1, of this subdivision.

11. Short-Circuited Armature Coil

A short-circuited armature coil may be caused by a thin copper bridge spun over the mica between two commutator bars, or the insulation may have broken down where the end connections of the armature coils cross. A short-circuited armature coil always produces sparking when it passes under a brush, because, being shorted, it has a circulating current in it when it makes contact with the brush and this contact serves to reduce the resistance of the short, allowing more current to flow, a certain amount of which passes through the brushes.

This short can be located by a simple test using a dry cell and a low-range voltmeter. First, lift all the brushes from the commutator except one pair, and to this pair of brushes connect the dry cell. Then with the low-range voltmeter, read the voltage between adjacent commutator bars in sequence around the commutator. The voltage readings will be the same until the shorted coil is reached and the voltmeter will read practically zero. To correct the shorted coil, it must be located and insulated.

12. Open Circuited Armature Coil

An open circuited coil produces severe sparking when the bars to which this coil is connected pass under the brush. Since the coil is open, no current can flow in that circuit. However, a voltage exists across this opening and, when the bars pass under a brush, the brush closes the open circuit causing a rush of current to flow. Also, when the bar leaves the brush, this current is ruptured, which causes the severe sparking. A test similar to the one used to locate the shorted coil is used to locate an open coil. However, the voltage readings will now all be zero until the open coil is reached and all voltage will be read across this open coil. An open coil can also be detected by the burned condition of the commutator bars to which it is attached. The open armature coil must either be repaired or replaced.

13. Short Circuit in One of the Field Circuits

To check for faults in these circuits, lift all the brushes and measure the resistance of the circuits between opposite brush arms. In checking these readings refer to the wiring-around-frame drawings and the test resistances given on the Master Plan Drawing. If the resistances vary more than 5 per cent from these values, check further as follows:

Check the resistance from the midpoint of each of the two circuits to their respective two brush rods - in other words, from A1 to brush rod #2 and brush rod #4, and from A2 to brush rod #1 and brush rod #3. This will indicate which section is at fault and, therefore, which coils to check individually.

The simplest way to check resistance may be to circulate a current through the circuit and measure the voltage drops across each coil and solve for the resistance of each coil. If any coil is found shorted, replace the complete coil on that pole.

CAUTION: Whenever a coil is removed, or for whatever other reason the Rototrol is dismantled, care must be taken to see that the poles and shims back of the poles are replaced in EXACTLY the same location they were in before removal. The air gaps were adjusted at the factory to obtain the required characteristics of the Rototrol exciter, and under no conditions should they be changed. The actual measured air gaps are given on the Master Plan Drawing and are measured at the center of the poles.

FLASHOVER

A flashover happens when arcing occurs between adjacent brushholder brackets. In general, it is caused by excessive voltage, or by abnormally low surface resistance on the commutator between brushholders of opposite polarity. Any condition tending to produce poor commutation increases the danger of flashover.

f) This shows how an incorrect value of a-c line voltage impressed on the automatic control unit, causes a corrective action to be applied to the a-c generator excitation system. The following paragraphs explain the individual units in detail.

4C2. ROTOTROL EXCITER

a) The ROTOTROL exciter is a four-pole, d-c generator of special design. The major features which distinguish the ROTOTROL exciter from a normal exciter are the special field windings and the laminated-steel frame.

b) The ROTOTROL exciter can be explained by reference to a conventional d-c generator which has only a single field winding as shown in Fig. VR-17. Field and brush polarity are shown on this figure. This figure shows a single field circuit that may be excited or energized in a number of ways. It may be connected in series with the armature and excited from armature current, as a series field; or across the armature and excited from the armature voltage as a shunt field. Another possibility is to excite the field from a separate source of voltage. It may be used to represent either the ROTOTROL series field or its shunt field.

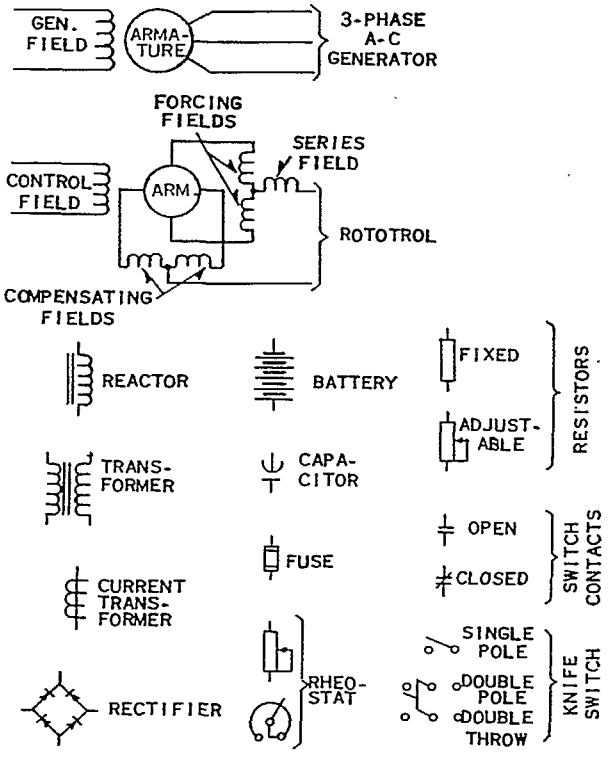

FIG. VR-16 — Diagram Symbols

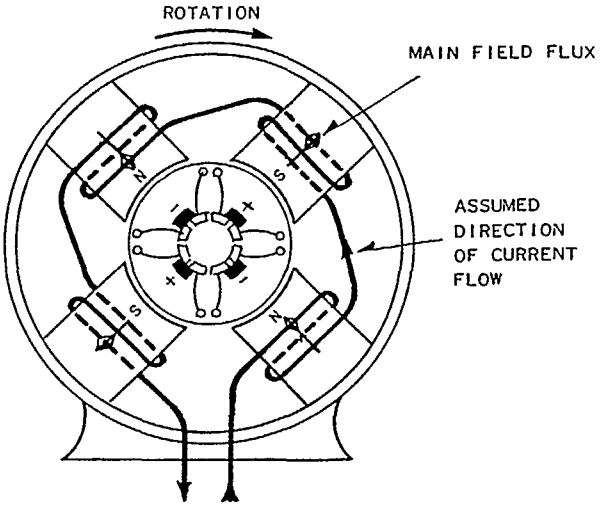

FIG. VR-17 — Field Winding Diagram of Conventional D-C Generator

c) Only a few slots, armature conductors and commutator segments are shown in the figure. A large number of slots, etc., will be used in the machine but showing them on this figure would unnecessarily complicate it.

d) A schematic diagram for the d-c generator is shown in Fig. VR-18 (a). If this generator is driven at constant speed, its armature voltage will vary with field current as shown in Fig. VR-18 (b). For field current up to the value "Ia" of the figure corresponding to part "A" on the saturation curve, the voltage is proportional to field current. At field currents above this value the iron becomes "saturated" and additional field current is less effective in producing voltage.

e) The ROTOTROL exciter is operated over an armature voltage range corresponding to the region below "A" of the saturation curve. This permits "tuning" of the machine. A ROTOTROL is said to be tuned when it has self-energized field windings such that for any armature voltage the flux produced is just sufficient to sustain that voltage. Such a circuit is illustrated in Fig. VR-19 (a). In this circuit the load current passes through the series field which provides part of the field magnetization corresponding to "SF" in Fig. VR-19 (b). The remaining required magnetization is obtained by proper adjustment of the shunt field rheostat. When adjusted properly the two fields together will supply all of the field magnetization required up to the voltage where the saturation curve is no longer linear. These two fields are conventional four-pole fields as the one shown in Fig. VR-17.

Causes of Insufficient Voltage

The following causes may prevent exciters from developing their normal voltage. (Note: Usually, the Rototrol exciter does not need to develop its name plate voltage in order to obtain rated voltage on the main generator. In general, disregard the Rototrol exciter voltage and be concerned only with the ability of the exciter and regulator to produce normal voltage on the main generator.)

1. THE ROTOTROL EXCITER MAY NOT BE UP TO SPEED, DUE TO THE FACT THAT THE PRIME MOVER IS RUNNING SLOW. Speed has a pronounced effect on the voltage output of a Rototrol exciter. To correct this trouble; the prime mover must be speeded up so that it is operating at rated speed.

2. THE SWITCHBOARD INSTRUMENTS MAY BE READING INCORRECTLY. Meters must be checked periodically against a standard meter to be sure that they are reading correctly.

3. THE BRUSHES MAY BE INCORRECTLY SET. They should be returned to the correct position.

4. THE REGULATOR MAY NOT BE FUNCTIONING CORRECTLY. Refer to the regulator portion of this manual.

5. THERE MAY BE A CIRCUIT FAULT IN A FIELD WINDING OR CONNECTION. The best way to check this is to measure resistances. The resistance of the commutating, forcing and compensating fields can be checked as outlined in paragraph 13 under "Commutation". In addition, the control field and the shunt field should also be checked for resistance. Always refer to the Master Plan Drawing for the proper values of resistance.

CLEANLINESS

The methods of cleaning insulation include wiping off the dirt with a "clean, dry cloth"; blowing it out with air pressure; drawing it off with suction apparatus; removing it in various ways with solvents, and washing it off with water--sometimes hot water and a solvent are required.

WIPING CLOTHS

When the apparatus is small and only dry dirt has collected on exposed parts, cleaning with a dry cloth may be satisfactory. Waste should not be used as the lint will adhere to the insulation and collect dust, moisture and oil.

Compressed Air

Blowing out dirt with air at not over 15 lbs. pressure is usually effective, particularly when the dirt has collected in places which cannot be reached with a cloth. Generally, cleaning can be done more quickly with compressed air than with a cloth. This applies especially to large apparatus. Do not direct compressed air against insulation until certain that it is free from moisture that may have accumulated in the air line from condensation. Too great an air pressure may loosen binding tape and blow dirt under it. Dirt blown out of a machine is likely to be drawn into others that are in operation near it. Remember, the use of compressed air simply transfers the dirt from one location to others, and unless the final location is outside the operation room, very little good may be accomplished.

Solvents

If the accumulation of dirt contains oil or grease, a solvent will usually be required to remove it. Carbon tetrachloride may be used as a solvent for cleaning purposes.

The characteristics of carbon tetrachloride are as follows:

This is a non-flammable compound, but due to its mild and somewhat pleasant odor, there is danger of working in excessively high concentrations. Since its vapor is heavier than air, it may accumulate in pits and confined spaces. Even moderate exposures are very dangerous after drinking intoxicating liquors.

This solvent is much more corrosive in its action than the petroleum solvents. It evaporates quickly, however, and may be used for cleaning windings with mild risk, if reasonable precautions are taken.

Applying Solvents

In cleaning electrical apparatus, solvents are generally used by wiping the insulation with cloths moistened with the cleaning fluid. In special cases, the solvents may be sprayed on the insulation, or the insulation parts may be dipped into the solvent.

Refer to Chapter 60, Bureau of Ships Manual, for instructions in the use of carbon tetrachloride.

4B8. DAMPING TRANSFORMER

a) The damping transformer assembly consists of a damping transformer with a adjustable resistor mounted on its frame (Fig. VR-14).

b) This transformer consists of a primary winding and a secondary winding each with the same number of turns.

c) The adjustable resistor is connected in series with the primary winding providing a means of adjusting the damping action of the transformer.

4B9. SPECIFICATION TABLE

a) The following specifications and weights are applicable to the component parts. For additional data, see Master Plan and Certification Data.

Apparatus	BuShips Spec. No.	Weight (Pounds)
Automatic Control Unit	MIL-R-2729	125
Potential Unit	MIL-R-2729	60
Manual Control Unit	MIL-R-2729	12.5
Voltage Adjusting Unit	MIL-R-15109	9.5
Current Transformer	MIL-I-1361	See Cert. Data
Control Switch	MIL-S-18396	5.5
Damping Transformer	MIL-T-16315	75

Water, or Water and Solvents

Electrical apparatus which has been filled with dirt by plant operations, dust storms or other unusual conditions, or has been submerged during a flood and is clogged with mud and foreign matter, will probably require a thorough washing out. In such cases, disassemble the apparatus and thoroughly wash all parts with water. Use an approved solvent to remove grease from the insulation. If water is applied to insulated parts with a hose, the pressure should not exceed 25 lbs. per square inch.

EXCESSIVE HEATING

Heating of Field Coils

Heating of field coils may develop from any one of the following causes:

1. Operating at too low a speed, requiring more than normal field current.
2. Too high generator voltage setting.
3. Partial short-circuit of one coil.
4. Overload on generator.

Heating of Armature

Heating of the armature may develop from any of the following causes:

1. Too great a load.
2. A partial short-circuit of armature coils with heating of the particular coils affected.
3. Short-circuits or grounds on armature or commutator.

Heating of Commutator

Heating of commutator may develop from any of the following causes:

1. Overload.
2. Sparking at the brushes.
3. Too high brush pressure.
4. Lack of inherent lubrication of brushes.

DISASSEMBLY AND ASSEMBLY

Removal of Armature from Shaft

STEP 1. Remove covers on front bracket.

STEP 2. Raise brushes.

STEP 3. Break connections to brushholders.

STEP 4. Remove bolts holding rocker ring to frame and remove rocker ring.

STEP 5. Remove bolt holding quill nut to shaft.

STEP 6. Insert the 1-1/2 inch press-off bolt, (supplied in main generator spare parts) in quill nut.

STEP 7. Turn bolt until armature is pulled off shaft.

STEP 8. Remove armature from frame assembly by drawing it through from the commutator end. Be careful not to damage coil or commutator. Do not support armature wholly or in part by pressure on the coils or commutator. Always use rope slings on the steel punchings.

Assembly of Armature on Shaft

STEP 1. Place armature on shaft and push on as far as possible by hand.

STEP 2. Place nut and spacer on one inch pull-on bolt (supplied with main generator spare parts).

STEP 3. Insert the one inch pull-on bolt through hole in quill nut and engage in hole in end of shaft.

STEP 4. Turn bolt until it is tight in hole in end of shaft.

STEP 5. Turn nut against spacer evenly and armature will move on shaft.

STEP 6. Remove bolt.

STEP 7. Insert bolt to hold quill nut to shaft.

STEP 8. Put on front bracket, make connections to brushholders, seat brushes and replace covers.

Removal of Poles and Coils

STEP 1. Perform steps (1) to (4) as in "Removal of Armature from Shaft".

STEP 2. Disconnect field connection, carefully marking each so that proper polarity will be obtained when reconnected.

STEP 3. Measure and record air gap.

STEP 4. Remove bolts holding pole to frame. Be careful to note and retain all liners between frame and pole as these must be replaced. See CAUTION note following.

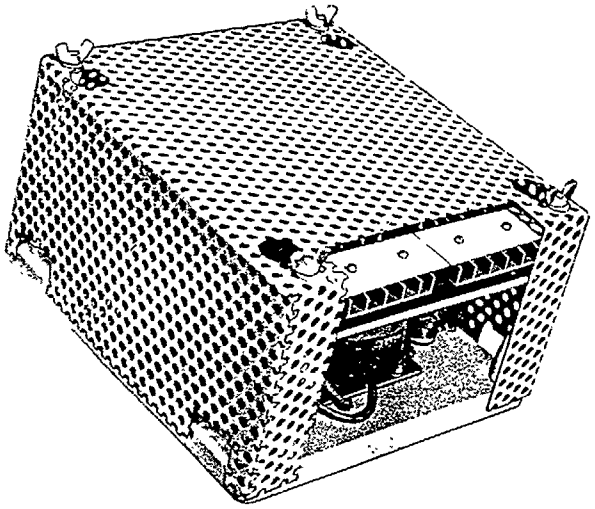

FIG. VR-8 — Potential Unit

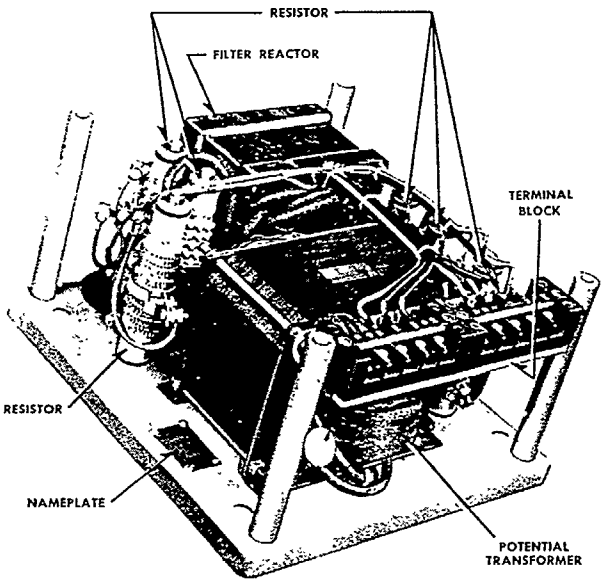

FIG. VR-9 — Potential Unit — Cover Removed

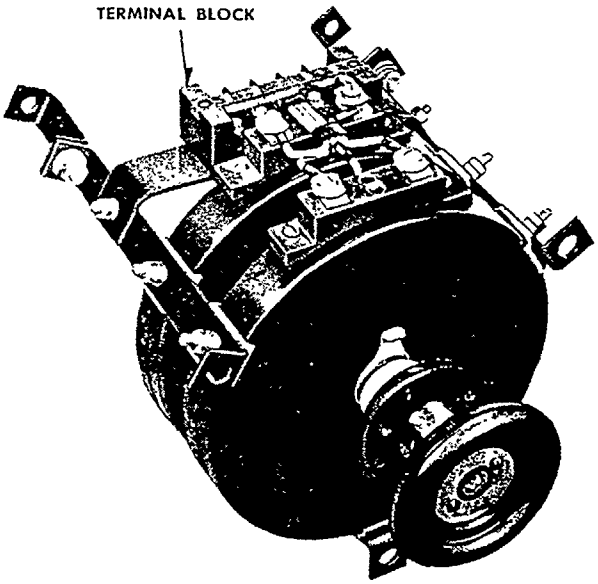

FIG. VR-10 — Manual Control Unit — Front View

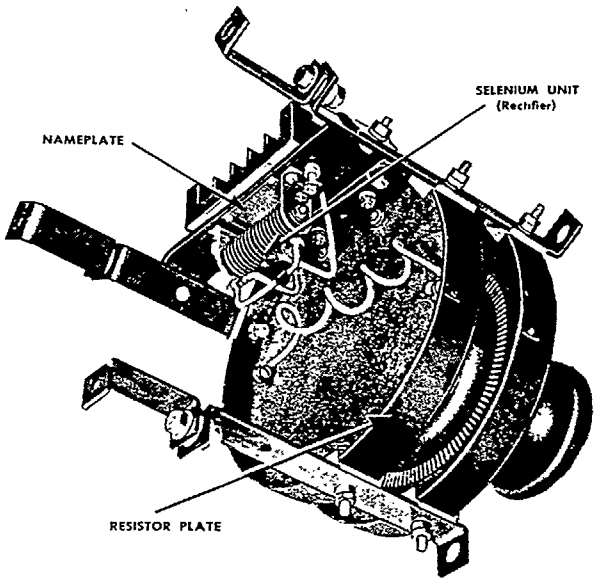

FIG. VR-11 — Manual Control Unit — Rear View

STEP 5. Slide pole and coil out of frame at commutator end of exciter.

STEP 6. Coil may be removed from pole by sliding it off frame end.

STEP 7. In replacing the coils and poles be sure the proper air gap is finally attained, see measurement made in Step 3.

CAUTION: Whenever a coil is removed, or for whatever other reason the Rototrol is dismantled, care must be taken to see that the poles and shims back of the poles are replaced in EXACTLY the same location they were in before removal. The air gaps were adjusted at the factory to obtain the required characteristics of the Rototrol exciter, and under no conditions should they be changed. The actual measured air gaps are given on the Master Plan Drawing and are measured at center of poles.

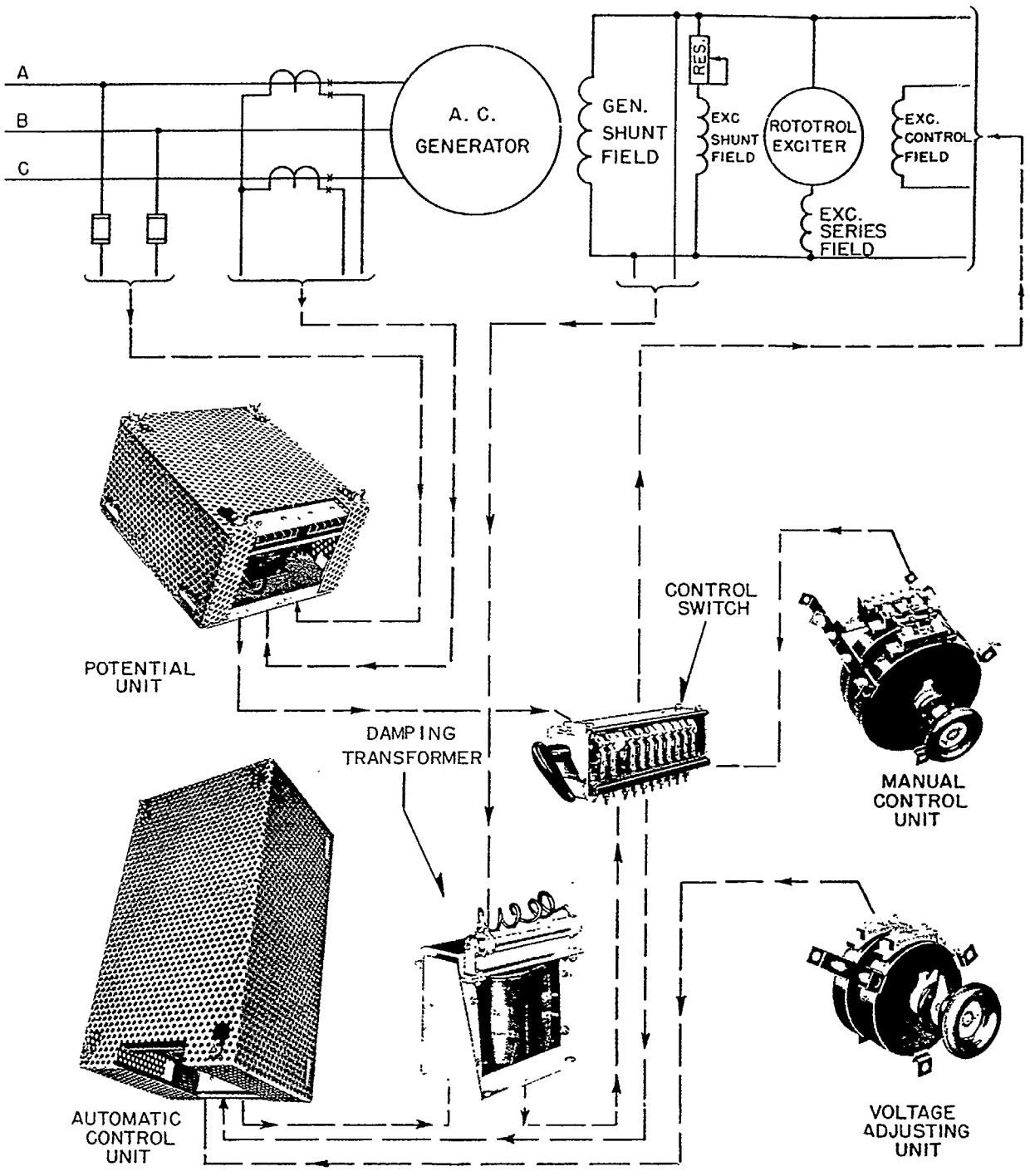

Fig. VR-4 — Pictorial Schematic Diagram

D-C ROTOTROL-EXCITER

General Index

Description	Page
Adjustments	305
Armature (Core--Winding)	303
Armature (Removal--Assembly)	315
Assembly, Disassembly and	315
Brushes	304
Brush Rigging	303
Classification	301
Cleanliness (Wiping Cloths, Comp. Air, Solvents, Etc.)	314
Coils, Removal of Poles and	315
Commutating Field Windings	303
Commutating Pole	303
Commutation	304
Commutator	303
Connections	305
DETAILED DESCRIPTION	303
Disassembly and Assembly	315
Drying, Methods of	310
Efficiency	301
Excessive Heating	315
Flashover	313
Front Bracket (Commutator End)	303
GENERAL DATA	301
General (Installation)	305
General (Maintenance)	310
Handling	305
Identification	301
Introduction	302
Inspection	305
Installation, Instructions	305
Insulation (Testing, Drying, Etc.)	310
Insufficient Voltage, Causes of	314
Line-up, Mechanical	306
Magnet Frame	303
Main Field Winding	303
MAINTENANCE	310
Main Pole	303
Mechanical Line-Up	306
Methods of Drying	310
OPERATION OF ROTOTROL-EXCITER	309
Performance, Causes of Poor	311
Poles and Coils, Removal of	315
Rating	301
Reference Drawings	301
Referenced Specification	301
Removal of Armature	315
Removal of Poles and Coils	315
Resistors, Shunt Field Tuning and Control Field	304
Rotation	304
Spares	304
Sparking at the Brushes	311
Starting and Before Starting	309
Tuning Procedure	307
Weights	301
Windings (Main and Commutating Fields)	303
Unpacking	305

TYPE WRN-11 GENERATOR VOLTAGE REGULATOR

SECTION A—INTRODUCTION

4A1. PREFACE

a) Careful reading of these instructions will provide information for the proper care and handling of the generator voltage regulating equipment, and lessen tendencies to damage the equipment, thus impairing its performance when placed in operation. It is recommended that the shipment should be checked immediately for loss or damage. If any such shortage or damage is found, it should be reported to the transportation company without delay.

b) The equipment will stand reasonable atmospheric and temperature conditions but should be stored in a location where temperature and moisture conditions are not extreme.

c) The open-type apparatus covers afford little protection against dust and dirt and although dust and dirt may not prove detrimental to operation, it is recommended that closed covers or containers should be used during storage.

4A2. INQUIRY DATA

a) When corresponding regarding the equipment described herein, refer to Type WRN-11 Voltage Regulating Equipment per General Order Number and M.S.O. Number specified in Certification Data. Complete identification of parts is contained on Master Plan specified in Certification Data.

b) Address inquiries to the nearest Westinghouse Sales Office - or to Westinghouse Electric Corporation, Switchgear and Control Division, East Pittsburgh, Pennsylvania, U.S.A.

4A3. VOLTAGE CONTROL

a) NECESSITY OF CONSTANT VOLTAGE. The ships' service generators supply power for auxiliary motors, lights, radio equipment, radar, and other electrically operated devices. A substantially constant voltage will operate this equipment more satisfactorily than fluctuating voltage. Low voltage will cause lights to be dimmed, motors to slow down or to pull out of step, radio equipment to function improperly, etc. A high voltage will cause some equipment to perform unsatisfactorily and other equipment such as lights and radio tubes to burn out. A fluctuating voltage will have the undesirable features of both high and low voltage. In addition to the effect on the operation of the equipment, varying voltage produces light flicker which is disturbing to personnel.

b) GENERATOR OPERATION WITH NO REGULATOR. If a generator has no automatic voltage regulating controls, (see Fig. VR-1), its voltage will vary with applied load. Thus, for instance, when a motor is started which draws high starting current, the terminal voltage of the generator supplying the power will drop. The generator voltage, if its excitation is not corrected, will remain lower than before the motor was started. The number of volts lower will depend upon factors such as the size of the motor, characteristics of its load, the design of the generator, etc. The operator can adjust the generator voltage to its proper value with the exciter field rheostat. After the motor's work is completed, or its breaker is opened removing it from the generator bus, the generator voltage will rise. The operator can again adjust the voltage to its proper value.

c) This method of generator operation has two main objections. First, the speed with which an operator can correct a voltage change is limited. A matter of seconds at least, and very possibly minutes, would be required (See Fig. VR-3). This length of time could easily be disastrous, especially under emergency conditions. Second, the constant attention of a special operator would be required to maintain proper voltage during operation of the generator.

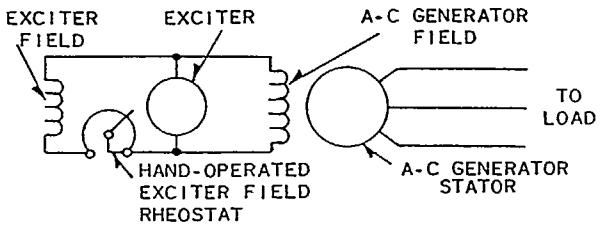

FIG. VR-1 — A-C Generator with Manual Voltage Control

LIST OF ILLUSTRATIONS

Fig.	Title	Page
VR-1	A-C Generator with Manual Voltage Control	401
VR-2	A-C Generator with Automatic Voltage Control	402
VR-3	A-C Generator Voltage-Time Characteristics (load suddenly applied and suddenly removed)	402
VR-4	Pictorial Schematic Diagram	403
VR-5	Automatic Control Unit	404
VR-6	Automatic Control Unit--Cover Removed	404
VR-7	Automatic Control Unit--Cover and Right Side Brackets Removed	404
VR-8	Potential Unit	405
VR-9	Potential Unit--Cover Removed	405
VR-10	Manual Control Unit--Front View	405
VR-11	Manual Control Unit--Rear View	405
VR-12	Voltage Adjusting Unit	406
VR-13	Regulator Control Switch	406
VR-14	Damping Transformer	406
VR-15	External Connection Diagram for Regulator	408
VR-16	Diagram Symbols	409
VR-17	Field Winding Diagram of Conventional D-C Generator	409
VR-18	D-C Generator Schematic Diagram and Saturation Curve	410
VR-19	D-C Generator Schematic Diagram and Saturation Curves (showing shunt and series field characteristics)	410
VR-20	Field Winding of Rototrol Exciter	411
VR-21	Schematic Diagram of Rototrol Exciter (showing all fields except interpole fields)	412
VR-22	Capacitor Characteristics	413
VR-23	Capacitor	413
VR-24	Reactor Characteristics	414
VR-25	Harmonic Reactor	414
VR-26	Characteristics of an Iron-Core Reactor	415
VR-27	Saturating Reactor	415
VR-28	Principle of Rectifier Operation	416
VR-29	Selenium Unit (Rectifier)	416
VR-30	Simplified Voltage-Sensitive Circuit	416
VR-31	Volt-Ampere Characteristics of a Capacitor and a Saturated Reactor	417
VR-32	Schematic and Vector Diagrams of a Rectifier D-C Circuit	418
VR-33	Voltage-Sensitive Circuit of Regulator	418
VR-34	Schematic Diagram of Regulator	419
VR-35	Frequency-Compensation Block and Vector Diagram	420
VR-36	Saturating Reactor Curves	420
VR-37	Vector Diagram of Positive-Sequence Filter	421
VR-38	A-C Generator Voltage Regulation Curves (showing effect of reactive droop compensation)	422
VR-39	A-C Generator Vector Diagrams (showing various power factor conditions)	423
VR-40	Schematic Diagrams of Manual Control Unit ("Raise" and "Lower" conditions)	424
VR-41	Schematic Diagram Showing Automatic Operation	424
VR-42	Schematic Diagram Showing Manual Operation	425
VR-43	Rotary Amplifier Voltage Regulator--Certification Data	435.1-435.6
VR-44	Rotary Amplifier Voltage Regulator--Master Plan	437-438

CHAPTER 4
TYPE WRN-11 GENERATOR VOLTAGE REGULATOR

ORDER IDENTIFICATION

Voltage Regulator	Type WRN-11
General Order	WG-74200 & WG-75200
Shop Order	22-Y-7125 & 22-Y-8442
Automatic Control Unit	S. 1584370
Voltage Adjusting Unit	S. 1369698
Potential Unit	S. 1584368
Manual Control Unit	S. 1584387
Regulator Cutout Switch	S. 1584388
Current Transformer (General Electric)	9JS2KBK2

DRAWING REFERENCE LIST

WRN-11 Regulator Master Plan	
Bureau of Ships Plan	S6101-3193602
Westinghouse Electric Corp. Drawing	1-JH-466
WRN-11 Certification Data	
Bureau of Ships Plan	CVA63-S6102-1704170
Westinghouse Electric Corp. Drawing	300-C-448
Bureau of Ships Plan	CVA64-300-1738097
Westinghouse Electric Corp. Drawing	404-D-865
JS-2 Current Transformer Master Plan	
Bureau of Ships Plan	99013-S6202-2284
General Electric Drawing	W-4150277

a. Cn consists of one capacitor, piece 27, V48-PF.

b. C3 consists of two capacitors, piece 29 and four capacitors, piece 30, V48-F.

c. C5 consists of one capacitor, piece 29, V48-C5.

d. Cb consists of two capacitors, pieces 29 and 28, V48-PS.

e. Ca consists of one capacitor piece 27 and three capacitors, piece 28, V47-PS.

Should any of these show a short-circuit, be sure to isolate the trouble before removing any capacitors. A short in capacitor Cb will also show a short on Cn, C3 and C5. Remove the connections to one terminal of each capacitor to be checked individually. Do this before removing capacitor.

12. Replace (-) wire on resistor tube Rdc.

13. Megger between terminal block and ground. The insulation resistance should be at least 0.5 megohm.

SEC. E—MAINTENANCE OF REGULATOR

4E1. INSPECTION

a) Routine inspections and cleaning will insure optimum service from the regulator. The circuit is entirely static and requires no oil or grease. SECURE THE BOARD before checking or testing any circuits. The following checks should be made every month:

CHECK 1. Remove ground from current transformers.

CHECK 2. Remove potential fuses in V1, V2 leads.

CHECK 3. Check circuit for grounds with a "megger".

CHECK 4. Replace fuses and ground connection.

CHECK 5. Check all connections to make sure they are tight. This includes all the regulator units, switches, current transformers and ROTOTROL.

CHECK 6. Operate system on automatic regulator control and manual control to be sure that all are operating satisfactorily.

CHECK 7. Remove any accumulation of dust or dirt either with a dry cloth or by blowing it out with dry, compressed air.

CHECK 8. Remove switch covers and blow out switch. Clean switch contacts per instructions given in Chapter 60 of Bureau of Ships Manual. Replace switch covers.

4E2. REPAIR OF PARTS EXTERNAL TO THE REGULATOR; i. e. RHEOSTATS AND SWITCHES

a) Voltage Adjusting Rheostat

1. The brush assembly can be removed by loosening the nut from the rear end of the shaft. The two plates may be separated by loosening the mounting straps. This facilitates working on the front plate.

b) Manual Contol Unit

1. Replacement of the brush assembly is substantially the same as on the voltage adjusting unit.

2. Removal of rectifier or terminal block is accomplished by disconnecting the leads and removing the mounting bolts.

c) Switches

1. STATIONARY CONTACTS

a. Remove slide cover.

b. Remove lead connections to faulty contact. Be sure the circuit is dead.

c. Remove the nuts from contact screw.

d. Contact assembly can then be removed through the side of the switch.

e. Reverse the above procedure to replace the contact.

2. MOVABLE CONTACTS

a. Remove the handle on the front. This handle is fastened to the shaft by a pointer screw.

b. Remove the rear end plate by taking out the four mounting screws. Two are in the top and two are in the insulating base.

c. Withdraw the rotor from the rear.

d. The contact segment key notches are numbered. A record should be made of these numbers to facilitate correct re-assembly.

e. Remove the shaft end plate.

f. The contact segments and insulating spacers can be slid off the shaft.

g. Reassembly is easily accomplished with the aid of the chart made in step (d).

4E3. LOCATION OF DEFECTIVE PART

a) The previous explanations have been concerned with observations on an energized unit. The checks listed here are to be made without power on the unit. The test equipment needed consists of a screwdriver, a pair of pliers and an ohmmeter.

b) Manual Control Unit

(Fig. VR-10 page 405).

1. Turn regulator control switch (CA) to AUTO.

4. QUICK CHECK

The following checks may be made to determine quickly if the trouble is in the regulator:

High Voltage

a. Measure the d-c voltage across NAR-NAL of the automatic control unit. NAL should be positive. No voltage or wrong polarity indicates automatic regulator trouble. The magnitude of the d-c voltage will depend upon how much above the regulator balance point the generator voltage is. However, it should be over 10 or 15 volts under the above conditions.

b. If in step (a) a satisfactory voltage is obtained, measure the voltage on F1-F2 of the ROTOTROL. F2 should be positive the same amount that NAL was. If it is not, the trouble is in the circuit between the regulator and the ROTOTROL. Check all connections and switches.

c. Slow the set down if possible to 75 per cent speed. If the voltage remains high the regulator is at fault. If the voltage drops at any reduced speed, the control field circuit is at fault. If step (b) has been performed and voltage found on the field, measure the resistance between F1-F2. It should be between 50 and 60 ohms.

Low Voltage

d. Measure the d-c voltage across NAR-NAL of the automatic control unit. NAR should be positive. Wrong polarity indicates automatic regulator trouble. At no input voltage, the d-c output voltage will be zero.

e. Check the control field circuit. This can be done as follows:

1) Turn the regulator control switch to AUTO.

2) Turn the regulator transfer switch to the regulator being checked.

3) Remove lead NAL from the automatic control unit.

4) Measure the resistance between NAR and the lead (not terminal block point) of NAL.

5) This resistance should be between 50 to 60 ohms.

6) If it is not locate the trouble. F1-F2 on the ROTOTROL should be 50 to 60 ohms. Check connections and switches.

5. REGULATOR CIRCUIT CHECK

High Voltage

Probable Cause and Remedy

a. Regulator LOWER circuit open (See Fig. VR-32, page 418). No voltage across saturating reactor circuit rectifier a-c terminals with voltage on V48-PS. Repair open circuit or replace defective part.

b. Voltage may appear across the a-c rectifier terminals and the d-c rectifier circuit be open. Repair any loose or open connections and replace any damaged parts.

c. One of the rectifiers shorted. No voltage across one or more legs of the rectifier with voltage on the other legs. Replace rectifier.

d. Capacitor C_n shorted. No voltage across C_n with voltage on circuit. Circuit voltage appears across insulating transformer from PS to PF. Replace capacitor.

e. Capacitor C_a may be shorted. Measure voltage from V47 to PS. This should be approximately 300 volts at normal voltage. If damaged, replace.

f. Check connections from the regulator through the control switch. See that all connections are tight and the switch contacts make satisfactorily.

g. A faulty control field circuit, check circuit and field. Field F1-F2 should measure between 50 and 60 ohms. See that the field is not reversed.

Low Voltage

Probable Cause and Remedy

a. Regulator RAISE circuit open (See Fig. VR-33, page 418). No voltage across a-c terminals of capacitor circuit rectifier with voltage on V48-PS. Replace defective part.

b. Voltage may appear across a-c terminals of rectifier and d-c circuit be open. Check d-c circuit between rectifiers. Repair any loose or open connections and replace any damaged parts.

c. The saturating reactor (S) may be short-circuited. If the voltage across the reactor is less than the voltage across the rectifier in the saturating reactor circuit, the reactor is showing a shorted winding. Replace the reactor.

STEP 1. Follow steps 1 to 5 (above) inclusive of "single generator operation" for each generator.
STEP 2. Parallel the generators or generator and bus which connects them to the load.
STEP 3. Balance the kw load or power by adjustment of the prime mover.
STEP 4. Turn the voltage adjusting unit to cause each generator to have the same power-factor load. Turn the voltage adjusting handle to LOWER on the generator with the most lagging power factor. This will equalize the currents of the two generators if they are similar machines.
STEP 5. If the line voltage is not 450 volts, move both voltage adjusting rheostats simultaneously to get 450 volts.
STEP 6. When the generators are operated under manual control, the manual control handle takes place of the voltage adjusting rheostats is the above conditions. As with single-generator operation, the manual adjustment must be used to hold the voltage constant as the load varies. This is done automatically when the regulator is in control.

4. Shutting Down—Ship's Service Generators

STEP 1. Disconnect each generator from the bus.

STEP 2. Leave the voltage regulator control switch (CA) in AUTO.

STEP 3. Shut down the prime mover.

STEP 4. When the set comes to rest, turn the regulator control switch (CA) to MAN.

STEP 5. Set the manual rheostat handle at a position approximating rated voltage (450 volts) for no load, rated frequency condition. This position should be determined (and marked) at a time when the set is manually operated at no load, rated voltage, and rated speed condition.

5. Shutting Down—Emergency Generators

STEP 1. Disconnect the generator from the bus.
STEP 2. Check that the regulator control switch (CA) is in AUTO.
STEP 3. Leave the voltage adjusting unit set at the normal rated voltage position.
STEP 4. Shut down the prime mover.

4D3. EMERGENCY TROUBLE CHART

The following chart is for emergency procedure only. Remedies are given in the Trouble Shooting Chart.

CAUTION:- Operating personnel should note the following high voltage conditions which exist in the regulator circuit. Reference should be made to the Master Plan or diagrams included in the book for identifications.

Voltage between V7 - R8 equals 485
Voltage between V18 - V27 equals 760
Voltage between V47 - V48 equals 765
Voltage between V48 - F equals 545

a) Single-Generator Operation

1. HIGH VOLTAGE

Voltage rises to a high value and fails to respond to normal treatment.

a. Check generator speed.

b. If the speed is normal. Turn the regulator control switch (CA) to MAN. Lower the voltage with the manual control unit handle.

c. If the voltage still remains high shut the system down. The trouble is probably in the control field circuit. See page 430, paragraphs 4e1 to 4e6.

2. LOW VOLTAGE

Voltage falls to a low value and fails to respond to normal treatment.

a. Check generator speed.

b. If the speed is normal, turn the regulator control switch (CA) to MAN. Raise the voltage with the manual control unit handle.

c. If the voltage remains low shut the system down. The trouble is probably in the control field circuit. See page 432, paragraphs 4e1 to 4e6.

b) Parallel Machine Operation

Regulator trouble under parallel operation will be indicated by unbalance in the generator power factor meters and a system voltage that is probably 10 to 20 volts from normal.

1. HIGH SYSTEM VOLTAGE

a. Under this condition one generator will have a very low "lagging" power factor. Switch the control of the generator with lagging power factor to manual control with the manual control handle set for normal voltage. Equalize the power factor meter readings with the manual control.

mostly reactance, is of a very low power factor. It will be leading in one machine and lagging in the other. This current is commonly known as circulating or cross-current, and the device to limit it as a cross-current compensator or reactive-droop compensator.

c. This compensator acts to reduce the voltage of a generator carrying lagging current. This reduction in voltage or "droop" with increase in inductive reactance load gives rise to the name "reactive droop compensator". Fig. VR-38 shows comparative voltage regulation curves with and without this compensator.

d. The resistor (RC) in the potential unit of the regulator is used as a reactive droop compensator. (RC) carries phase C current. The relationship between the regulator input voltage (E_{AB}) and the phase current (I_C) is shown in Fig. VR-39 (a). The drop in (RC) at unity power factor load is at 90^0 to the regulator input voltage. The drop in (RC) has no effect here as is shown in Fig. VR-39 (b). The regulator responds to the sume of the generator voltage and the compensator drop as shown in Fig. VR-39 (b).

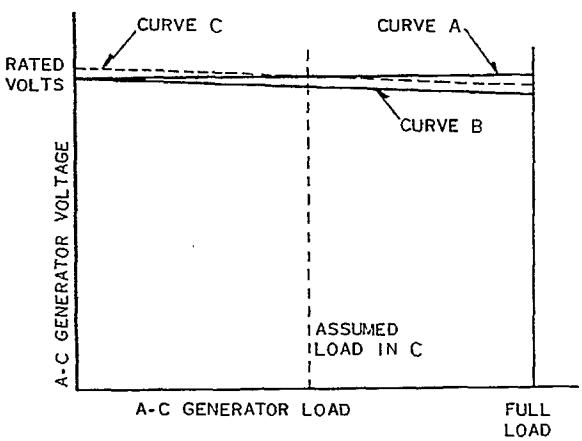

CURVE A = A-C GENERATOR VOLTAGE USING NO REACTIVE DROOP COMPENSATION IN REGULATOR.

CURVE B = A-C GENERATOR VOLTAGE USING REACTIVE DROOP COMPENSATION IN THE REGULATOR. GENERATOR LOAD ASSUMED TO BE AT RATED POWER FACTOR (0.8 LAG).

CURVE C = FOR ANY A-C GENERATOR LOAD THE CURVE B IS RAISED BY THE VOLTAGE ADJUSTING RHEOSTAT TO GIVE RATED VOLTAGE AT THE LOAD CONDITION AS SHOWN BY CURVE C.

FIG. VR-38 — A-C Generator Voltage Regulation Curves (showing effect of reactive-droop compensation)

e. The effect of changing the load current at constant lagging power factor is shown in Fig. VR-39 (c). This diagram shows how the generator voltage is reduced as the lagging load current is increased. Increasing the value of resistance in RC will have a similar effect.

f. The effect of changing the power factor at constant load current is shown in Fig. VR-39 (d). This diagram shows how the generator voltage is reduced as load power factor lags.

g. With generators in parallel, the operation of the compensators will be to minimize any reactive current difference between the generators. Assume that two generators are operating in parallel supplying a lagging power factor load. While they are balanced, each will be supplying the same amount of reactive load. The real load will not be considered here as the regulator has no control over kilowatt load. If an unbalance should occur for some reason, the conditions and action will be as follows:

1. Assume generator A to suddenly receive an increase in excitation and generator B, a decrease in excitation.

2. Under these conditions generator A will be carrying more lagging current than generator B.

3. Generator A, since it is carrying more lagging current than before, will have its excitation reduced by the reactive-droop compensator as shown in Figs. VR-39 (c) and (d).

4. Since generator B is carrying less lagging current than before, its compensator will allow its excitation to increase.

5. This action will restore balance since the generator with low excitation had it increased and the generator with high excitation had it reduced.

6. Summary

Initial conditions: Gen. A - High excitation causing increased lagging current. Gen. B - Low excitation causing decreased lagging current.

Corrective Action: Gen. A - Compensator reduces excitation Gen. B - Compensator raises excitation.

Result: Gen. A and Gen. B each have the same excitation and equally divide the reactive currents.

f. The power factor of the voltage-sensitive network is a function of frequency. The angle between (V_{AB}) and (V_{BC}) is dependent upon the power factor of the voltage sensitive network. Consequently, the angle of (V_{BC}) with (V_{AB}) changes with frequency.

g. This diagram shows how the generator voltage (AE) remains constant with changing frequency.

5. HARMONIC FILTERING

The a-c current through the saturating reactor in the voltage-sensitive circuit is distorted (See Fig. VR-36 (b)). If this circuit were allowed to flow through the potential unit and frequency compensating circuit it would cause errors in the performance of these circuits. For this reason the capacitors (C3, C5 and Cb) and reactors (X3 and X5) are connected across the circuit. The values of these units are chosen so they tend to prevent the reactor current distortion from affecting the rest of the regulator circuit.

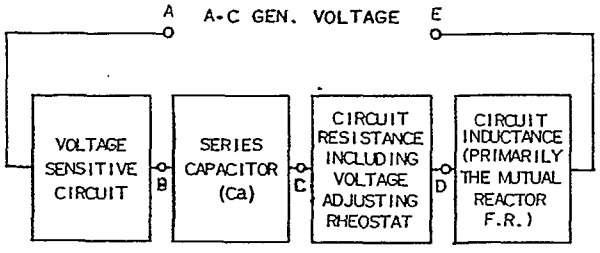

REGULATOR CIRCUIT ELEMENTS OF FIGURE 34 LUMPED FOR VECTOR DIAGRAM OF FIGURE (b).

(a)

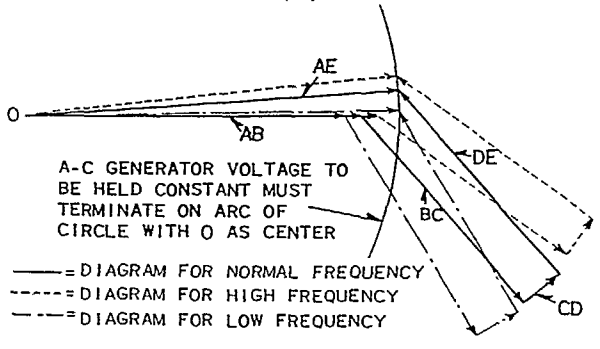

CIRCUIT VECTOR DIAGRAMS FOR DIFFERENT FREQUENCIES

(b)

FIG. VR-35 — Frequency-Compensation Block and Vector Diagram

b) Voltage Adjusting Unit

1. The voltage adjusting unit indicated in Fig. VR-34 and shown in Fig. VR-12, page 406, is a rheostat. Its function is to enable the operator to adjust the generator voltage to any desired value from 436 to 482 volts. The electrical operation of this rheostat can be explained as follows:

2. For a given frequency, a specific voltage must exist between (V-27 and V-48) of the automatic control unit to satisfy the regulator. Any deviation from this voltage will be corrected by the regulators in the manner described previously.

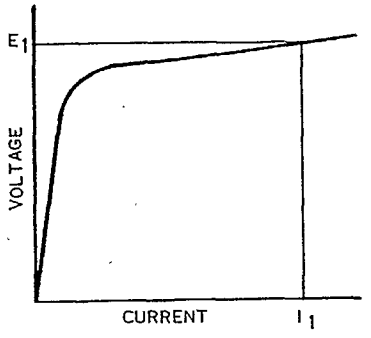

IRON-CORE REACTOR SATURATION CURVE SEE FIGURE 25(B)

(a)

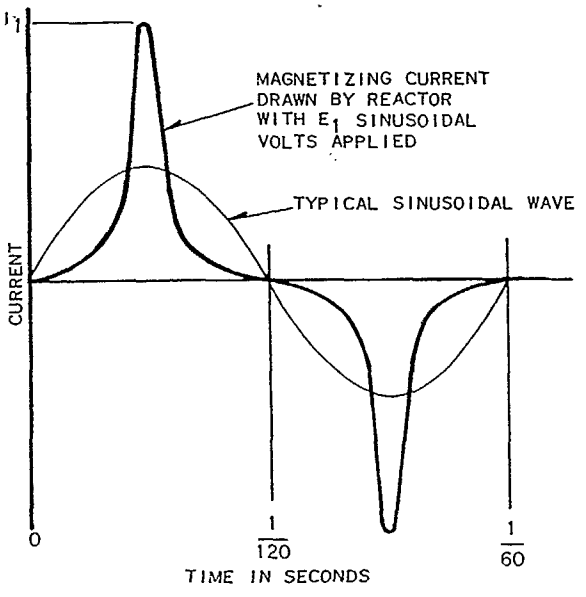

CURRENT DRAWN BY SATURATING REACTOR AS A RESULT OF APPLYING E_1 SINUSOIDAL VOLTS (60 CYCLES PER SECOND)

FIG. VR-36 — Saturating Reactor Curves

3. With low a-c voltage, say (E-V), on the line terminals, (NAR) will be positive with respect to (NAL) and pass a current through the ROTOTROL control field in the "raise" direction. In Fig. VR-33 and "raise" current exceeds the "lower" current. This will increase excitation and restore the a-c generator voltage to normal.

d. Fig. VR-32 shows the circuit of the static regulator in detail. The four units shown are the a-c generator unit, the potential unit, the voltage adjusting unit and the automatic control unit. The circuit of Fig. VR-34 incorporates the circuit of Fig. VR-33 in the automatic control unit together with a group of reactors and capacitors. These reactors and capacitors are used to provide frequency compensation as described in the following section.

4. FREQUENCY COMPENSATION

Frequency compensation is provided to maintain the generator voltage within a specified band as the generator speed or frequency is changed. The voltage-sensitive circuit consists of the reactor (S) in parallel with the capacitor (Cn) (See Fig. VR-34). Figure VR-22 (c) and Fig. VR-24 (c) show how a capacitor and a reactor vary in reactance with frequency. Since they vary in an entirely different manner, it is obvious that the circuit of Fig. VR-33 is sensitive to frequency. In other words, if frequency compensation is not provided, the regulated generator voltage will change as the speed of the generator changes.

a. In the "WRN-11" regulator, frequency compensation is introduced by means of a circuit between the a-c terminals of the generator and the voltage-sensitive circuit. The operation of this circuit may be explained as follows:

b. The effect of an increase in frequency when the voltage-sensitive circuit is operating at the balance point will be to increase the current in the capacitor branch and decrease the "lower" current in the reactor branch. This will cause a greater "raise" current to flow, which is the same effect as is caused by a decrease in voltage. In order to compensate for this effect it is necessary to increase the voltage across the voltage-sensitive circuit as the frequency increases. Correspondingly, the voltage across the voltage-sensitive circuit must be decreased as the frequency is decreased below normal. This kind of response can be obtained most easily by means of a series capacitor of the proper value. This capacitor (Ca) in Fig. VR-34 is of such a value that, together with the reactance of the circuit, primarily (F.R.), it will accurately compensate for frequency variations.

c. Electrically this is accomplished by the series element, the capacitor and reactor, experiencing a change in impedance as frequency varies. This impedance change results in a

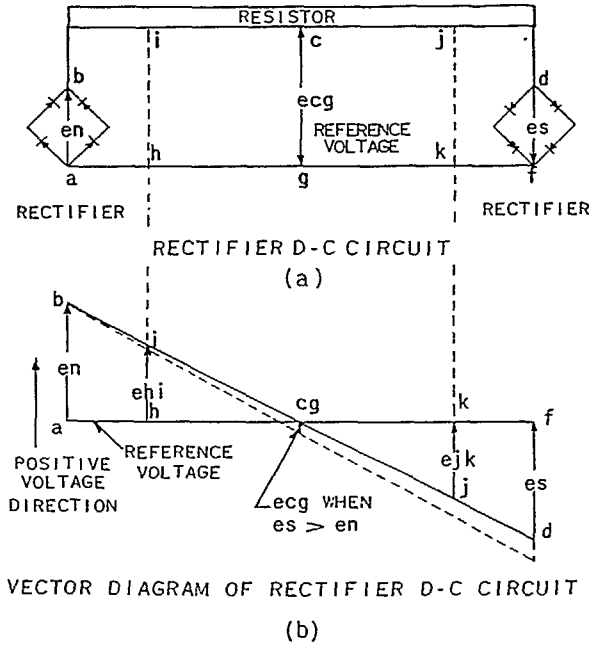

FIG. VR-32 — Schematic and Vector Diagrams of A Rectifier D-C Circuit

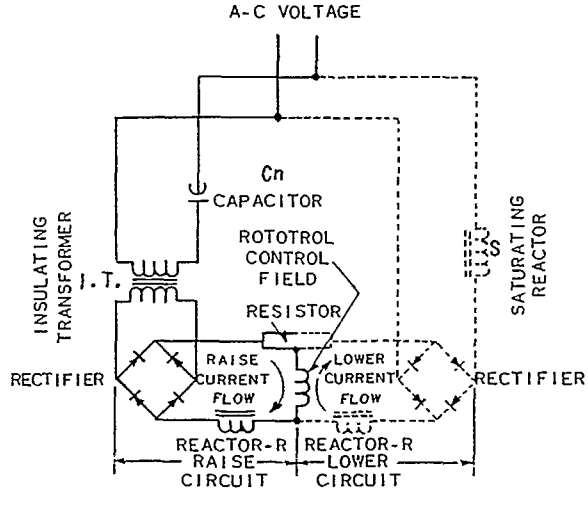

FIG. VR-33 — Voltage-Sensitive Circuit of Regulator

2. The rectifier is made up of an assembly of rectifying discs. Each disc has the property of premitting current to flow through it in only one direction. Actually, a negligible current does flow in the opposite direction. When E_1 of Fig. VR-28 is positive, current flows through section 1 of the rectifier, through the load, then returns to line E_2 through section 3. During the other half of the a-c cycle when E_2 is positive, sections 4 and 2 carry current. This results in an unidirectional or d-c current in the load.

3. Figure VR-29 shows a rectifier with a-c and d-c terminals indicated.

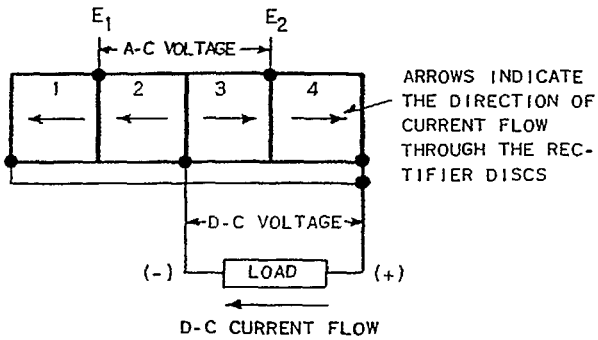

FIG. VR-28 — Principle of Rectifier Operation

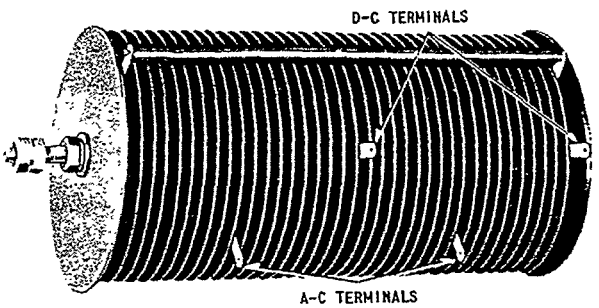

FIG. VR-29 — Selenium Unit (Rectifier)

2. THE VOLTAGE SENSITIVE CIRCUIT

The voltage sensitive circuit element consists essentially of two parallel circuit branches (See Fig. VR-30). One branch contains a capacitor and the other a saturating reactor. The volt-ampere curves of the two circuit elements are both shown in Fig. VR-31. The curve of the reactor illustrates how its current increases more rapidly than voltage. It will be noted that currents through the two branches are equal at only one value of voltage. This is called the balance point of the two impedances. The operation of the voltage regulator depends upon the fact that when the voltage increases above this point, the current flowing through the reactor is greater than the current through the capacitor. When the voltage decreases below the balance point, the capacitor current is greater. When this unbalance occurs a current will flow in the ROTOTROL control field. This will raise or lower the exciter voltage, thus adjusting the a-c generator excitation until its voltage satisfies the balance point of the regulator.

a. The load resistances (m) and (p) of Fig. VR-30 are assumed to be identical. When the a-c voltage is the value (E), as shown in Fig. VR-31, the current flowing in load (m) is equal to the current in (p). When the line voltage is the value (E+V), a greater current will flow in the reactor branch. In other words, a higher d-c voltage will appear across (p) than (m). If the a-c voltage is the value (E-V), the opposite condition of a lower voltage on (p) will occur.

b. Fig. VR-32 (a) shows the d-c terminals of both rectifiers of Fig. VR-30 connected in series through a resistor. This resistor is shown as a uniform resistor between the rectifiers to simplify the vector diagram of Fig. VR-32 (b). In this figure, d-c voltage is plotted vertically against resistor length horizontally. Thus, the voltage indicated at any point in the vector diagram is the voltage existing a proportional distance along the resistor from the reference. Since (a-f) on this diagram is drawn the same length as the resistor, vector (E_{hi}) is the voltage of point (i) above the reference (h).

c. For the assumed balanced condition where (e_s) is equal to (e_n), the points (c) and (g) co-

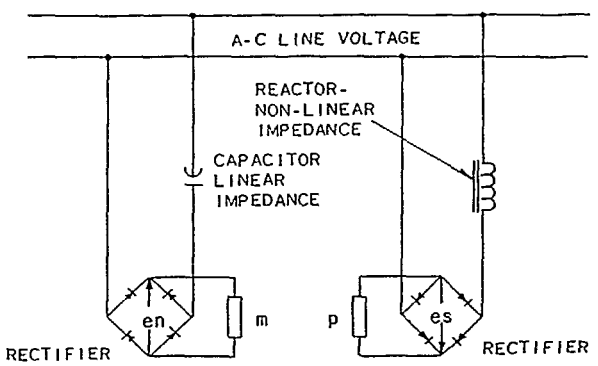

FIG. VR-30 — Simplified Voltage-Sensitive Circuit

2. When an alternating voltage is applied to the plates of a capacitor, it charges the plates in one direction or polarity, then discharges and recharges in the other direction. Thus, a capacitor appears to offer a path for alternating-current flow.

3. The more rapidly the voltage applied to a capacitor alternates, the greater will be the current flow with the same voltage applied. Thus, the higher the frequency, the lower will be the reactance of a capacitor. The reactance is a measure of the opposition offered to current flow, or a kind of "resistance". Also the greater the capacitance, the less will be the reactance of the capacitor. Capacitance is expressed in "farads" or more often in the more practical unit of "microfarads". The properties we are concerned with primarily are: (a) a capacitor offers a definite opposition to the flow of current; this is known as capacitive reactance and (b) the capacitive reactance of a capacitor depends upon its capacitance and the frequency of the applied voltage.

4. The manner in which reactance varies with capacitance or frequency is shown in Fig. VR-22 (c).

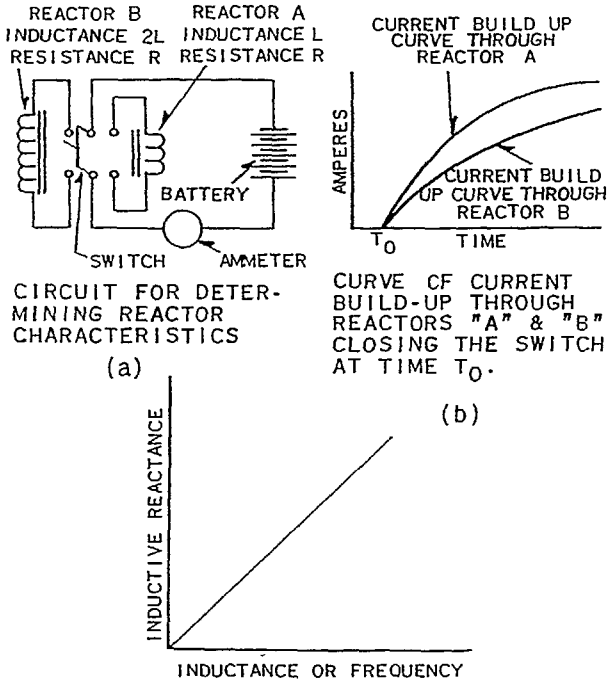

FIG. VR-24 — Reactor Characteristics

5. Fig. VR-23 shows a typical capacitor ready for installation. A terminal is brought out from each plate for circuit connections.

b. Reactor

1. A simple reactor is merely a coil of wire. This coil has a property known as inductance. Inductance is a property similar to mechanical inertia. That is, the inductance will oppose any change in current through the coil. Thus, when a direct-current voltage is applied to the coil, (See Fig. VR-24 (a), the current will build up as shown in Fig. VR-24 (b)).

2. Two curves are shown in Fig. VR-24 (b). Comparison of these curves shows how the current builds up more slowly through a larger inductance if the circuit resistance remains uncharged. Thus, increasing the inductance increases the reactor's opposition to current flow. In other words, increasing the inductance increases the inductive reactance.

3. The inductance of the reactor depends upon the number of turns on the coil and the material used for the "flux" path. Iron is usually used for the flux path and the kind of iron alloy as well as the amount and shape has effect upon the inductance.

4. When an alternating voltage is impressed upon a reactor, an alternating current will flow through it. Since this voltage of one polarity, exists only for a short time, the current will

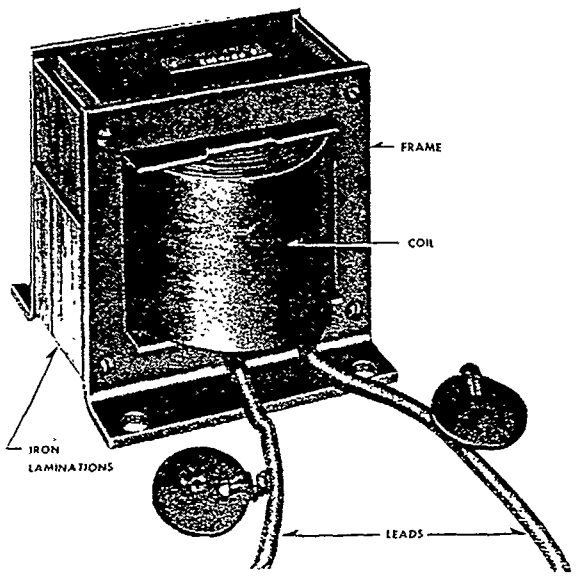

FIG. VR-25 — Harmonic Reactor

j) Fig. VR-21 shows all of the fields mentioned above. The fields are practically in the same order on this figure as they are on the machine. A slight change has been made for simplicity. The poles are shown unduly long to give sufficient space to clearly show individual fields. The polarities, current and flux directions are those resulting from a "raise" control signal.

k) The ROTOTROL exciter load current as well as the unbalanced currents must flow through the forcing and compensating fields. The coils are wound on the field poles in such a direction that the load current cancels so far as magnetizing effect is concerned, while the magnetizing effects of the unbalance currents add. This can readily be seen by studying Figs. VR-20 (b), (c) and (d).

l) In addition to the field windings described above a set of commutating pole windings are included in the ROTOTROL exciter. No diagram is included to show them. These windings produce the proper magnetic flux in the commutating poles to assist commutation of the current in the armature. During the time that a commutator segment passes under a brush, the current passing through the coil connected to that segment must be brought to zero and reversed. If the current is not reversed before the commutator segment emerges from the brush edge there may be sparking and damage to brushes and commutator. The commutating pole flux produces the necessary voltage in the armature coils to cause this reversal in current. For additional information on the interpole windings, refer to Chapter 3, "Rototrol Exciter, Commutation".

m) The overall operation of the ROTOTROL exciter is as follows:

1. Starting with the voltage at normal, no appreciable current will flow in the control winding. Thus, as a result, no unbalanced current will flow, in the forcing fields.

2. When the voltage of the a-c generator drops, due to an increase in load, the regulator produces a current in the ROTOTROL control field in the "raise" direction. This strengthens one south pole and weakens the other. The resultant voltage unbalance causes a current to flow in the forcing fields connected between the posi-

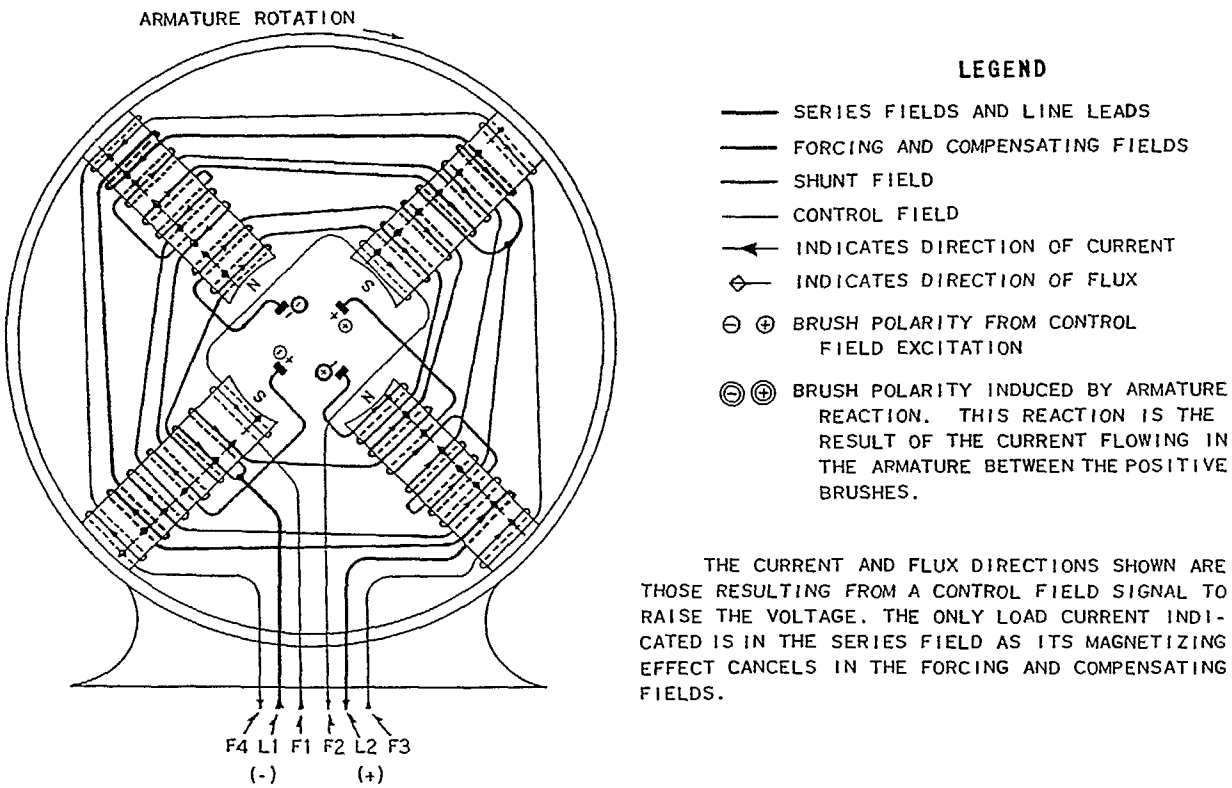

FIG. VR-21 — Schematic Diagram of ROTOTROL Exciter (showing all fields except interpole fields)

f) The "WRN-11" regulator output power is not sufficient to give the desired rate of change to the ROTOTROL exciter voltage by energizing a normal main field winding. Thus, practical use of a phenomenon, which is suppressed in the ordinary d-c generator, is utilized in this ROTOTROL. This phenomenon is associated with the unbalance of voltage generated in the armature of a generator when the magnetic flux densities through its field poles are not equal. With the proper type of armature winding this difference in voltage generated will appear between brushes of like polarity. For instance, in the 4-pole ROTOTROL exciter, strengthening one south pole and weakening the other south pole with a special field winding, will cause a voltage to appear between the two positive brushes. This winding is called the "control field" and is shown in Fig. VR-20 (a). The field and brush polarities produced by the control field winding are shown for a low-voltage condition where the control signal is to "raise". The control field may be of either polarity, depending upon the signal received from the static regulator.

g) The voltage between the two positive brushes, produced by the control field winding, is used

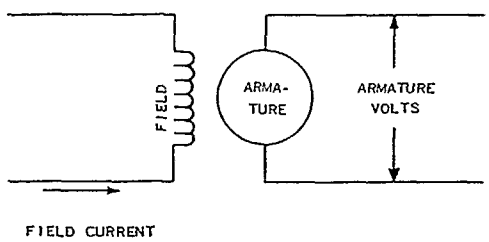

D-C GENERATOR FIELD AND ARMATURE
(a)

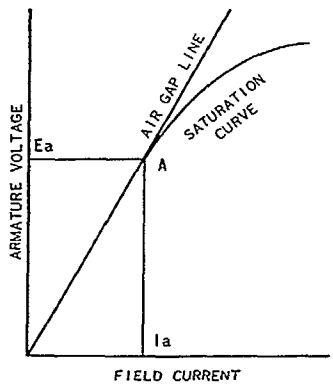

TYPICAL D-C GENERATOR SATURATION CURVE
(b)

FIG. VR-18 — D-C Generator Schematic Diagram and Saturation Curve

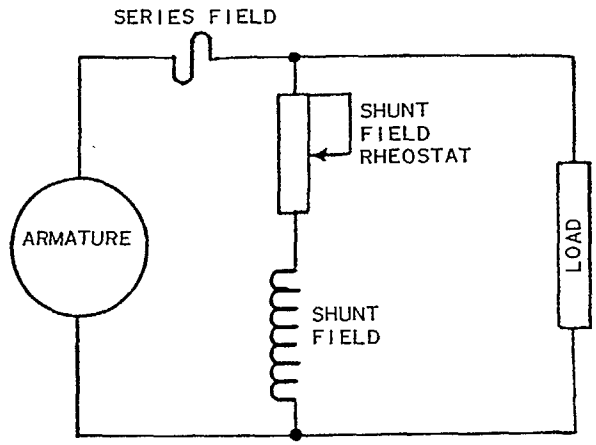

D-C GENERATOR SCHEMATIC
SHOWING SERIES AND SHUNT FIELDS

(a)

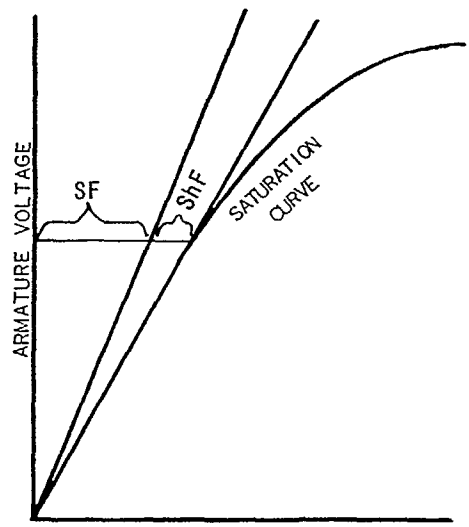

SATURATION CURVE FOR D-C
GENERATOR SHOWING EXCITATION
FROM SERIES AND SHUNT FIELDS.

(b)

FIG. VR-19 — D-C Generator Schematic Diagram and Saturation Curves (showing shunt and series field characteristics)

SEC. C—PRINCIPLES OF OPERATION

4C1. OVERALL OPERATION OF SYSTEM

a) The terminal voltage of an a-c generator is controlled by adjusting its field excitation. In the ROTOTROL regulating scheme this is accomplished by a "static" regulator and a ROTOTROL exciter. The regulator is called, "static" because it has no moving parts.

b) Figure VR-15 shows the main units of this regulating scheme. The potential unit is energized by the a-c generator bus voltage and current. Its output is a single-phase a-c voltage which is used to energize the automatic control unit through the voltage adjusting unit.

c) The automatic control unit is a voltage-sensitive device, the output of which is a d-c voltage. The polarity and magnitude of this d-c voltage will be determined by the magnitude of the impressed a-c voltage.

d) The control signal, or output of the automatic control unit, is impressed upon the ROTOTROL exciter control field. The ROTOTROL exciter is a direct-current generator, which has very high power amplification; that is, a large output power can be controlled by a very small amount of power in the control field. Current in one direction through the ROTOTROL control field will cause its output voltage to rise, while current in the opposite direction will cause its voltage to decrease.

e) When the generator output voltage is exactly at the desired value, the output voltage of the automatic control unit will be zero. If the generator voltage increases above the regulated value, the d-c output voltage will be in the direction to decrease excitation voltage through the ROTOTROL exciter. When the generator voltage falls below regulated value, the d-c output voltage will be in the direction to increase the a-c generator excitation.

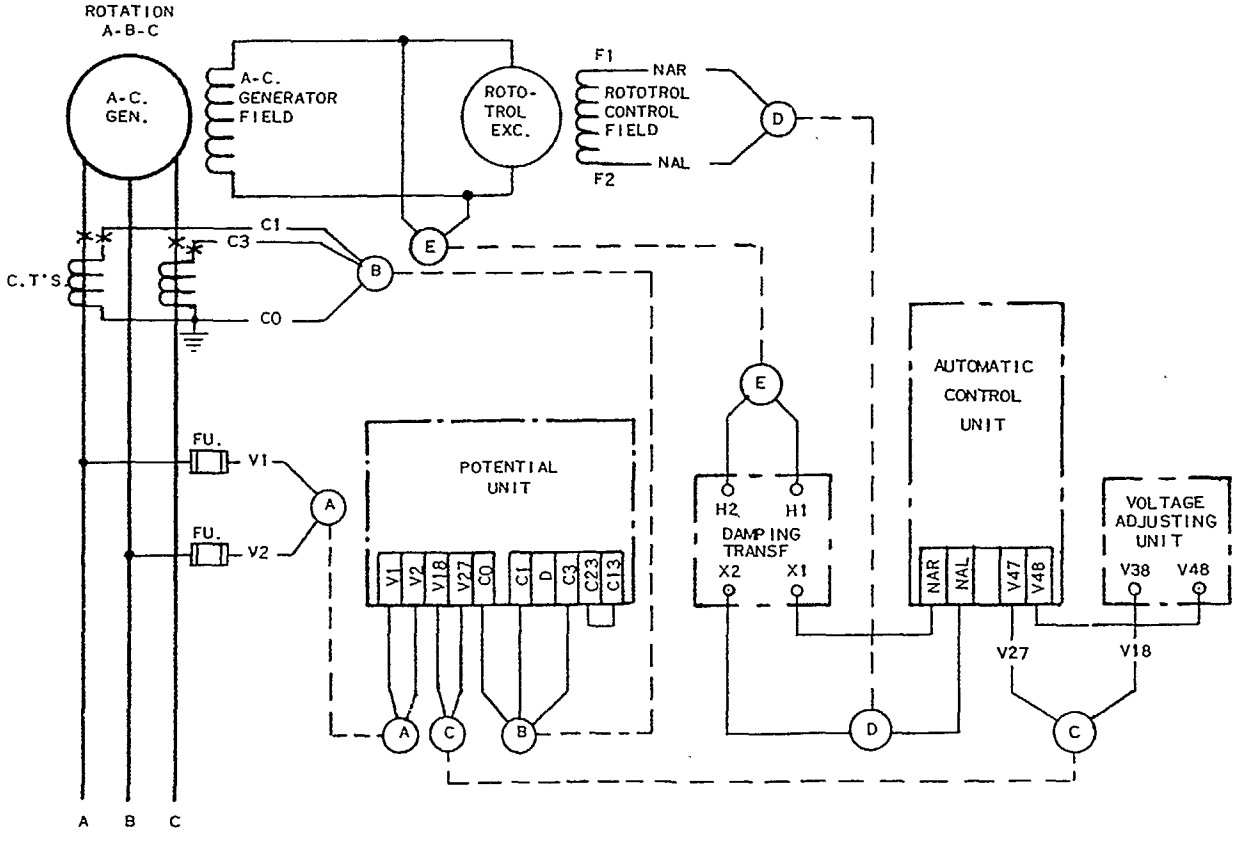

FIG. VR-15 — External Connection Diagram for Regulator

b) Connections are made at the terminal block located on a bracket at the top rear of the unit. The identification nameplate is located on the under side of the terminal block mounting bracket.

4B5. VOLTAGE ADJUSTING UNIT

a) The voltage adjusting unit is a two-plate rheostat with an overall resistance of 75 ohms and a rating of 2.5--1.8 amperes. The rheostat contains 71 steps of resistance which can be either inserted or taken out of the potential circuit thus raising or lowering the value at which the regulator holds the generator voltage.

b) The complete unit is shown in Fig. VR-12 and is identified by Westinghouse Style 1369698.

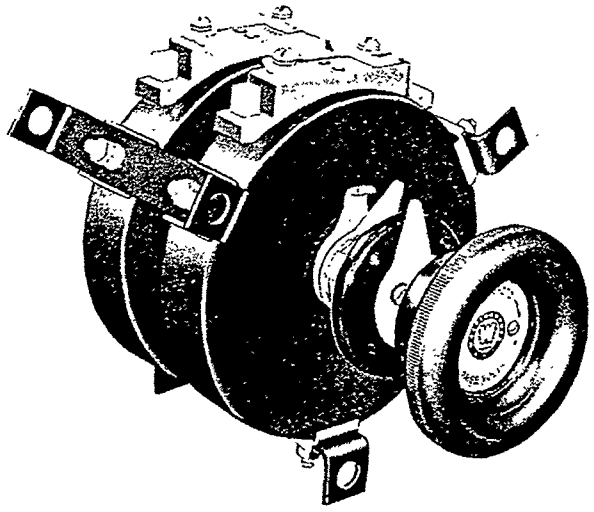

Fig. VR-12 — Voltage Adjusting Unit

4B6. CURRENT TRANSFORMERS

a) Two current transformers, which are described in Sheet No. 1, Certification Data, are supplied for each generator. They are connected in phases A and C and their energy is supplied to the potential unit.

4B7. REGULATOR CONTROL SWITCH

a) The regulator control switch is of the rotary drum-type provided with two positions, namely, MANual and AUTOmatic. In the MAN position the generator voltage is controlled by the operator by means of the manual control unit (See Fig. VR-42). In the AUTO position the generator voltage is under full control of the regulator (See Fig. VR-41) and will be maintained at a value pre-determined by the setting of the voltage adjusting unit.

b) The complete switch is shown in Fig. VR-13 and identification is given on the nameplate located on the rear end bracket. Switch details are described in paragraph 4E2c (page 432).

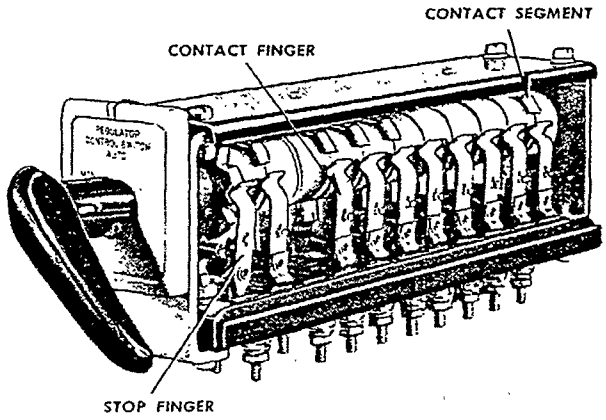

Fig. VR-13 — Regulator Control Switch

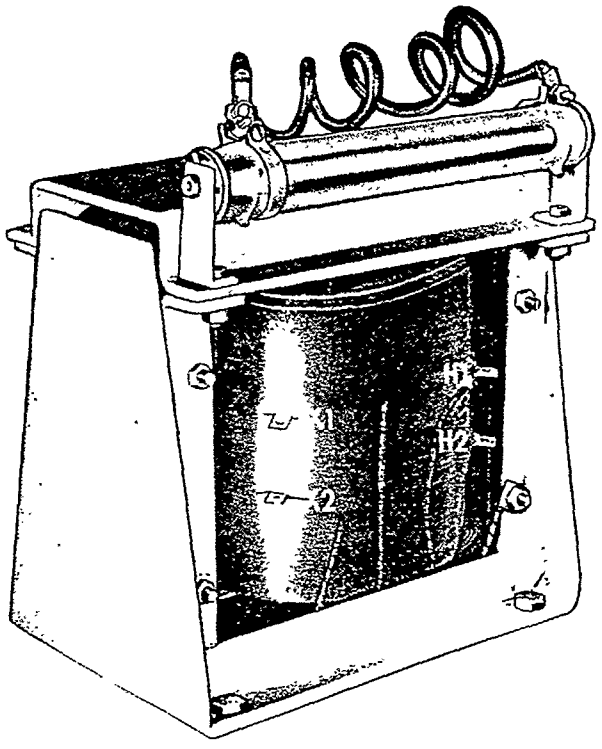

Fig. VR-14 — Damping Transformer

SEC. B—DETAILED DESCRIPTION

4B1. COMPONENT PARTS

a) The Type "WRN-11" Generator Voltage Regulating Equipment consists of five parts which are described in paragraphs 4B2 to 4B8.

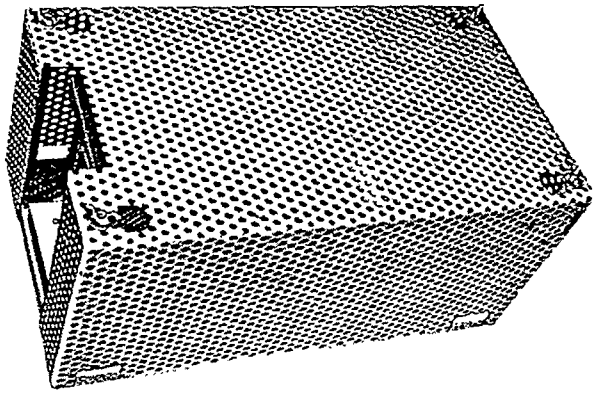

FIG. VR-5 — Automatic Control Unit

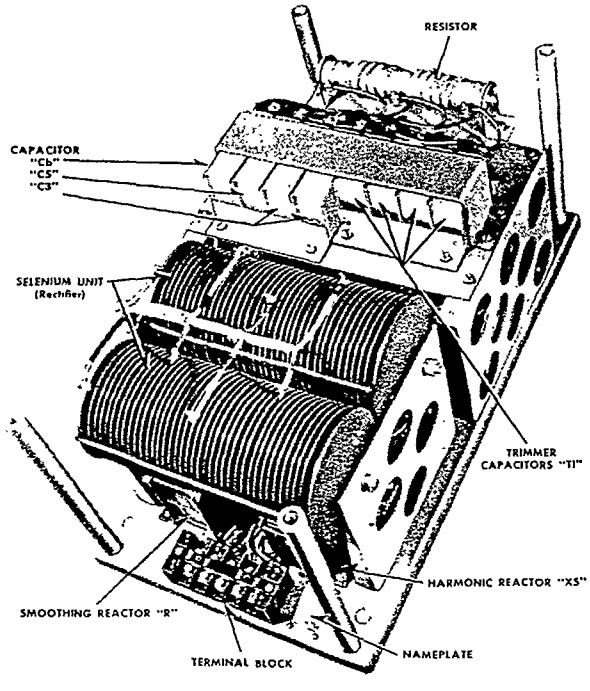

FIG. VR-6 — Automatic Control Unit Cover Removed

4B2. AUTOMATIC CONTROL UNIT

a) This unit, which is shown in Figs. VR-5, -6, and -7, consists physically of an insulating transformer, a resistor, a pair of Selenium rectifiers and a set of capacitors and reactors enclosed in a perforated metal case and mounted on a steel base. These parts are so connected to form the circuits described in detail in paragraph 4C3, (page 413). Connections to this unit are made at the terminal block which is located at the lower end of the base and is accessible through the opening in the top cover.

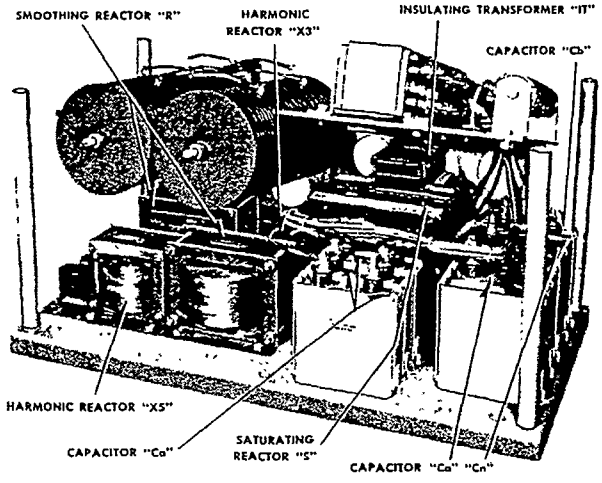

FIG. VR-7 — Automatic Control Unit Cover and Right Side Brackets Removed

b) Complete identification of this unit is given by information contained on the nameplate, located on the base near the terminal block.

4B3. POTENTIAL UNIT

a) This unit, which is shown in Figs. VR-8 and -9, consists physically of a potential transformer, a filter reactor and a set of resistors. The circuit formed by these parts is described in detail in paragraph 4C3, (page 413). The terminal blocks, used for connections to this unit, are located at the bottom of the unit on a bracket below the potential transformer and are accessible through an opening in the top cover.

b) The nameplate located on the left side of the base gives complete identification of the unit.

4B4. MANUAL CONTROL UNIT

a) A single-plate rheostat, fixed-plate resistor and half-wave Selenium rectifier comprise this unit. Figures VR-10 and -11, show the arrangement and circuit details are described in paragraph 4C3, (page 413).

d) GENERATOR OPERATION WITH AN AUTOMATIC REGULATOR. Because of the time delay in manual correction of the varying generator voltage, an automatic voltage regulator is used (See Fig. VR-2). The "WRN-11" Generator Voltage Regulator will hold the generator voltage at a constant value except for very brief transient conditions, and will correct voltage changes in a fraction of a second. It will maintain proper voltage at any load up to the rating of the machine. Thus, the main objections to manual control are overcome by the use of an automatic voltage regulator. Obviously, no special operator is needed.

e) The voltage regulator acts promptly to restore the generator voltage and thus keeps the electrical equipment operating properly at all times including emergencies. It increases the reliability and useful life of the electrical equipment.

f) Figure VR-3 shows a comparison of voltage-time characteristics for three conditions of a-c generator operation; i.e., with no generator field correction, with hand-operated voltage control, and with automatic regulator control.

4A4. BRIEF DESCRIPTION OF REGULATING EQUIPMENT

a) The purpose of the automatic voltage regulator, on any installation, is to maintain the terminal voltage of the alternating-current generators at, or very close to, 450 volts, regardless of load variations. This is accomplished by means of a special direct-connected exciter, identified as a ROTOTROL exciter and a static electrical measuring circuit, known as the Type "WRN-11" Static Voltage Regulator.

b) The generator terminal voltage is impressed upon the static circuit. The output of this circuit is a d-c potential which varies in polarity, according to high and low generator voltage conditions, and energizes the control field of the ROTOTROL exciter. The terminal voltage of the exciter is controlled by the low-energy control field, thus effecting the required changes in the generator excitation and output voltage.

c) The apparatus comprising a set of regulating equipment is illustrated in Fig. VR-4 and described in Section B following.

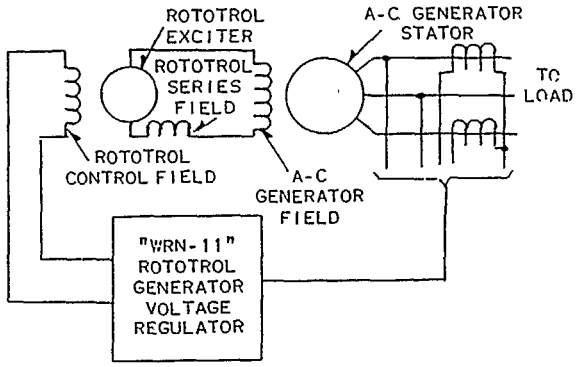

FIG. VR-2 — A-C Generator with Automatic Voltage Control

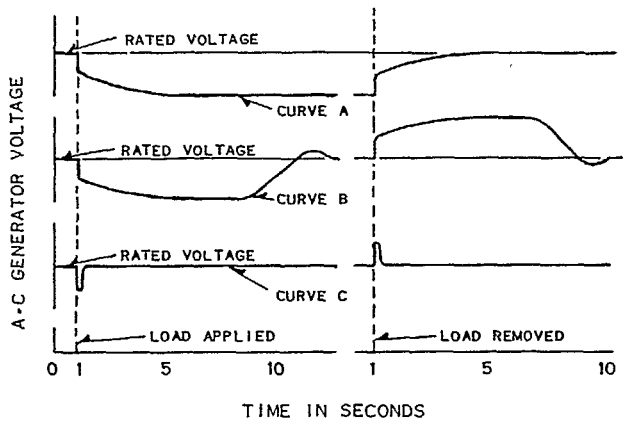

CURVE A - VOLTAGE-TIME CURVE USING NO CORRECTIVE MEANS I.E. CONSTANT GENERATOR FIELD CURRENT

CURVE B - PROBABLE VOLTAGE-TIME CURVE USING MANUAL CONTROL

CURVE C - VOLTAGE-TIME CURVE USING AUTOMATIC REGULATOR

FIG. VR-3 — A-C Generator Voltage-Time Characteristics (load suddenly applied and suddenly removed)

CHAPTER 4—GENERATOR VOLTAGE REGULATOR

TABLE OF CONTENTS

Subject	Page
INTRODUCTION	401
Description of Regulating Equipment	402
Inquiry Data	401
Preface	401
Voltage Control	401
Generator Operation with No Regulator	401
Generator Operation with an Automatic Regulator	402
Necessity of Constant Voltage	401
DETAILED DESCRIPTION	404
Automatic Control Unit	404
Component Parts	404
Current Transformers	406
Damping Transformer	407
Manual Control Unit	404
Potential Unit	404
Regulator Control Switch	406
Specification Tables	407
Voltage Adjusting Unit	406
PRINCIPLES OF OPERATION	408
Overall Operation of System	408
ROTOTROL Exciter	409
Voltage Regulator	413
Automatic Control Unit	413
Damping Transformer	425
Manual Control Unit	423
Potential Unit	421
Voltage Adjusting Unit	420
Wiring Diagrams	425
OPERATING INSTRUCTIONS	426
Emergency Trouble Chart	428
Single Generator Operation	428
Parallel Machine Operation	428
Initial Operation	426
Generator with Regulator	426
Parallel Operation of Generators	426
Single Generator Under Load	426
Normal Operation	427
Parallel Operation	428
Single Generator Operation	427
Shutting Down	428
Trouble Shooting Chart	429
Single Machine Operation	429
Parallel Machine Operation	431
MAINTENANCE	432
Inspection	432
Location of Defective Part	432
Repair of Parts External to the Regulator	432
SPARE PARTS (SEE FIG. VR-43)	435.1-435.6

GENERATOR VOLTAGE REGULATOR

General Index

Description	Paragraph	Page
Automatic Control Unit	4-B-2	404
CERTIFICATION DATA	---	435.1
Component Parts	4-B-1	404
Control Switch	4-B-7	406
Control Unit, Automatic	4-B-2	404
Control Unit, Manual	4-B-4	404
Current Transformer	4-B-6	406
Damping Transformer	4-B-8	407
Defective Parts, Location of	4-E-3	432
Description of Equipment	4-A-4	402
DETAILED DESCRIPTION	---	404
Emergency Trouble Chart	4-D-3	428
External Parts, Repair of	4-E-2	432
ILLUSTRATIONS, LIST OF	---	400.2
Initial Operation	4-D-1	426
Inquiry Data	4-A-2	402
Inspection (Maintenance)	4-E-1	432
INTRODUCTION	---	401
LIST OF ILLUSTRATIONS	---	400.2
Location of Defective Parts	4-E-3	432
MAINTENANCE OF REGULATOR	---	432
Manual Control Unit	4-B-4	404
Normal Operation	4-D-2	427
OPERATING INSTRUCTIONS	---	426
Operation, Principles of	---	408
Over-all Operation	4-C-1	408
Potential Unit	4-B-3	404
Preface	4-A-1	401
PRINCIPLES OF OPERATION	---	408
Regulator Control Switch	4-B-7	406
Repair of External Parts	4-E-2	432
Repair Parts	---	435.1-.6
Rototrol-Exciter	4-C-2	409
Specification Table	4-B-9	407
Transformer, Current	4-B-6	406
Transformer, Damping	4-B-8	407
Trouble Shooting	4-D-4	429
Voltage Adjusting Unit	4-B-5	406
Voltage Control	4-D-3	401
Voltage Regulator	4-C-3	413

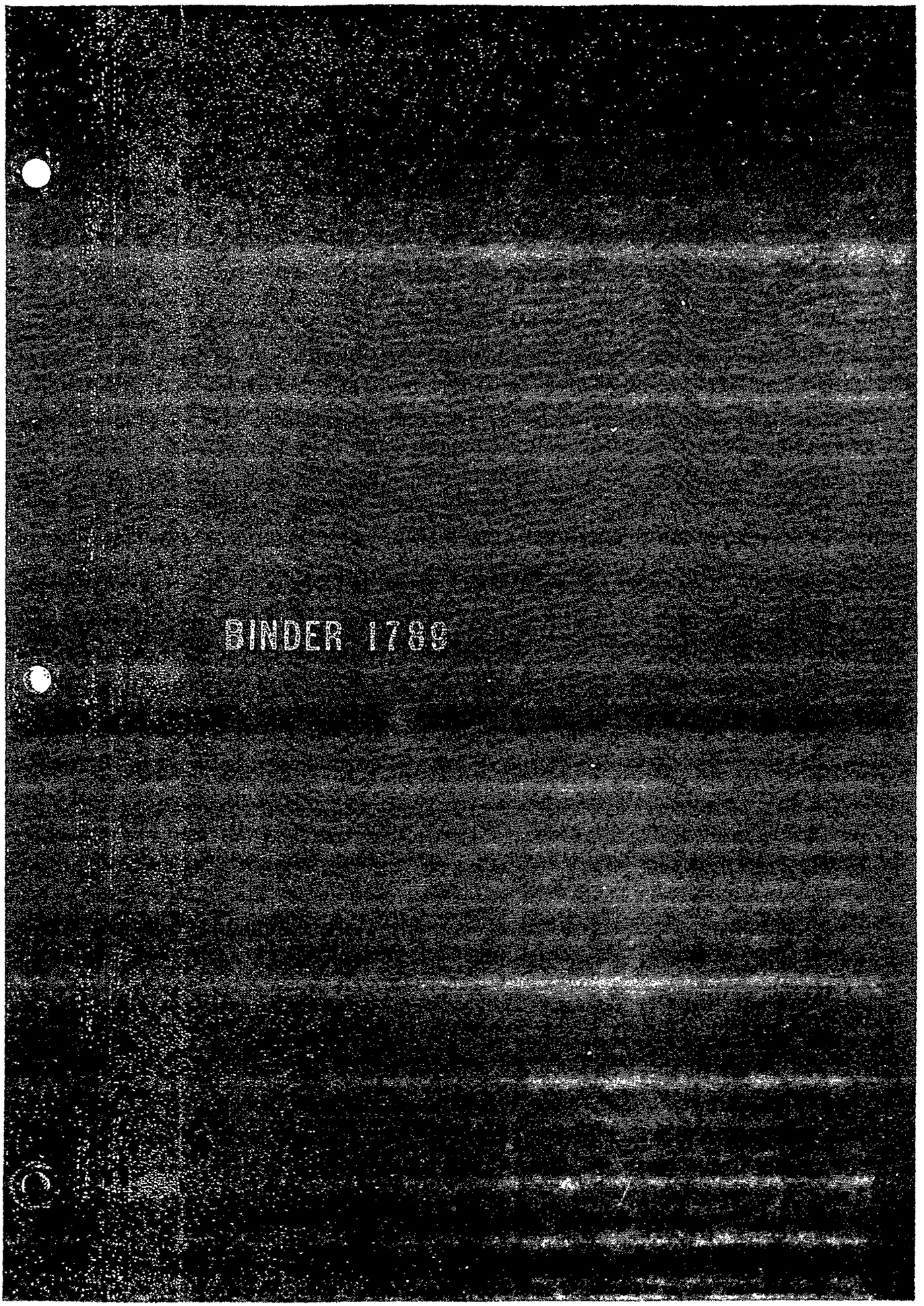
BINDER 1789

CHAPTER 4
TYPE WRN-11 GENERATOR VOLTAGE REGULATOR

ORDER IDENTIFICATION

Voltage Regulator	Type WRN-11
General Order	WG-74200 & WG-75200
Shop Order	22-Y-7125 & 22-Y-8442
Automatic Control Unit	S. 1584370
Voltage Adjusting Unit	S. 1369698
Potential Unit	S. 1584368
Manual Control Unit	S. 1584387
Regulator Cutout Switch	S. 1584388
Current Transformer (General Electric)	9JS2KBK2

DRAWING REFERENCE LIST

WRN-11 Regulator Master Plan	
Bureau of Ships Plan	S6101-3193602
Westinghouse Electric Corp. Drawing	1-JH-466
WRN-11 Certification Data	
Bureau of Ships Plan	CVA63-S6102-1704170
Westinghouse Electric Corp. Drawing	300-C-448
Bureau of Ships Plan	CVA64-300-1738097
Westinghouse Electric Corp. Drawing	404-D-865
JS-2 Current Transformer Master Plan	
Bureau of Ships Plan	99013-S6202-2284
General Electric Drawing	W-4150277

LIST OF ILLUSTRATIONS

Fig.	Title	Page
VR-1	A-C Generator with Manual Voltage Control	401
VR-2	A-C Generator with Automatic Voltage Control	402
VR-3	A-C Generator Voltage-Time Characteristics (load suddenly applied and suddenly removed)	402
VR-4	Pictorial Schematic Diagram	403
VR-5	Automatic Control Unit	404
VR-6	Automatic Control Unit--Cover Removed	404
VR-7	Automatic Control Unit--Cover and Right Side Brackets Removed	404
VR-8	Potential Unit	405
VR-9	Potential Unit--Cover Removed	405
VR-10	Manual Control Unit--Front View	405
VR-11	Manual Control Unit--Rear View	405
VR-12	Voltage Adjusting Unit	406
VR-13	Regulator Control Switch	406
VR-14	Damping Transformer	406
VR-15	External Connection Diagram for Regulator	408
VR-16	Diagram Symbols	409
VR-17	Field Winding Diagram of Conventional D-C Generator	409
VR-18	D-C Generator Schematic Diagram and Saturation Curve	410
VR-19	D-C Generator Schematic Diagram and Saturation Curves (showing shunt and series field characteristics)	410
VR-20	Field Winding of Rototrol Exciter	411
VR-21	Schematic Diagram of Rototrol Exciter (showing all fields except interpole fields)	412
VR-22	Capacitor Characteristics	413
VR-23	Capacitor	413
VR-24	Reactor Characteristics	414
VR-25	Harmonic Reactor	414
VR-26	Characteristics of an Iron-Core Reactor	415
VR-27	Saturating Reactor	415
VR-28	Principle of Rectifier Operation	416
VR-29	Selenium Unit (Rectifier)	416
VR-30	Simplified Voltage-Sensitive Circuit	416
VR-31	Volt-Ampere Characteristics of a Capacitor and a Saturated Reactor	417
VR-32	Schematic and Vector Diagrams of a Rectifier D-C Circuit	418
VR-33	Voltage-Sensitive Circuit of Regulator	418
VR-34	Schematic Diagram of Regulator	419
VR-35	Frequency-Compensation Block and Vector Diagram	420
VR-36	Saturating Reactor Curves	420
VR-37	Vector Diagram of Positive-Sequence Filter	421
VR-38	A-C Generator Voltage Regulation Curves (showing effect of reactive droop compensation)	422
VR-39	A-C Generator Vector Diagrams (showing various power factor conditions)	423
VR-40	Schematic Diagrams of Manual Control Unit ("Raise" and "Lower" conditions)	424
VR-41	Schematic Diagram Showing Automatic Operation	424
VR-42	Schematic Diagram Showing Manual Operation	425
VR-43	Rotary Amplifier Voltage Regulator--Certification Data	435.1-435.6
VR-44	Rotary Amplifier Voltage Regulator--Master Plan	437-438

TYPE WRN-11 GENERATOR VOLTAGE REGULATOR

SECTION A—INTRODUCTION

4A1. PREFACE

a) Careful reading of these instructions will provide information for the proper care and handling of the generator voltage regulating equipment, and lessen tendencies to damage the equipment, thus impairing its performance when placed in operation. It is recommended that the shipment should be checked immediately for loss or damage. If any such shortage or damage is found, it should be reported to the transportation company without delay.

b) The equipment will stand reasonable atmospheric and temperature conditions but should be stored in a location where temperature and moisture conditions are not extreme.

c) The open-type apparatus covers afford little protection against dust and dirt and although dust and dirt may not prove detrimental to operation, it is recommended that closed covers or containers should be used during storage.

4A2. INQUIRY DATA

a) When corresponding regarding the equipment described herein, refer to Type WRN-11 Voltage Regulating Equipment per General Order Number and M.S.O. Number specified in Certification Data. Complete identification of parts is contained on Master Plan specified in Certification Data.

b) Address inquiries to the nearest Westinghouse Sales Office - or to Westinghouse Electric Corporation, Switchgear and Control Division, East Pittsburgh, Pennsylvania, U.S.A.

4A3. VOLTAGE CONTROL

a) NECESSITY OF CONSTANT VOLTAGE. The ships' service generators supply power for auxiliary motors, lights, radio equipment, radar, and other electrically operated devices. A substantially constant voltage will operate this equipment more satisfactorily than fluctuating voltage. Low voltage will cause lights to be dimmed, motors to slow down or to pull out of step, radio equipment to function improperly, etc. A high voltage will cause some equipment to perform unsatisfactorily and other equipment such as lights and radio tubes to burn out. A fluctuating voltage will have the undesirable features of both high and low voltage. In addition to the effect on the operation of the equipment, varying voltage produces light flicker which is disturbing to personnel.

b) GENERATOR OPERATION WITH NO REGULATOR. If a generator has no automatic voltage regulating controls, (see Fig. VR-1), its voltage will vary with applied load. Thus, for instance, when a motor is started which draws high starting current, the terminal voltage of the generator supplying the power will drop. The generator voltage, if its excitation is not corrected, will remain lower than before the motor was started. The number of volts lower will depend upon factors such as the size of the motor, characteristics of its load, the design of the generator, etc. The operator can adjust the generator voltage to its proper value with the exciter field rheostat. After the motor's work is completed, or its breaker is opened removing it from the generator bus, the generator voltage will rise. The operator can again adjust the voltage to its proper value.

c) This method of generator operation has two main objections. First, the speed with which an operator can correct a voltage change is limited. A matter of seconds at least, and very possibly minutes, would be required (See Fig. VR-3). This length of time could easily be disastrous, especially under emergency conditions. Second, the constant attention of a special operator would be required to maintain proper voltage during operation of the generator.

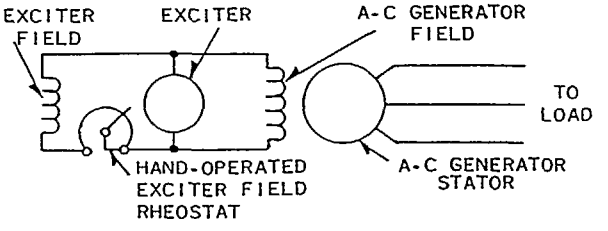

FIG. VR-1 — A-C Generator with Manual Voltage Control

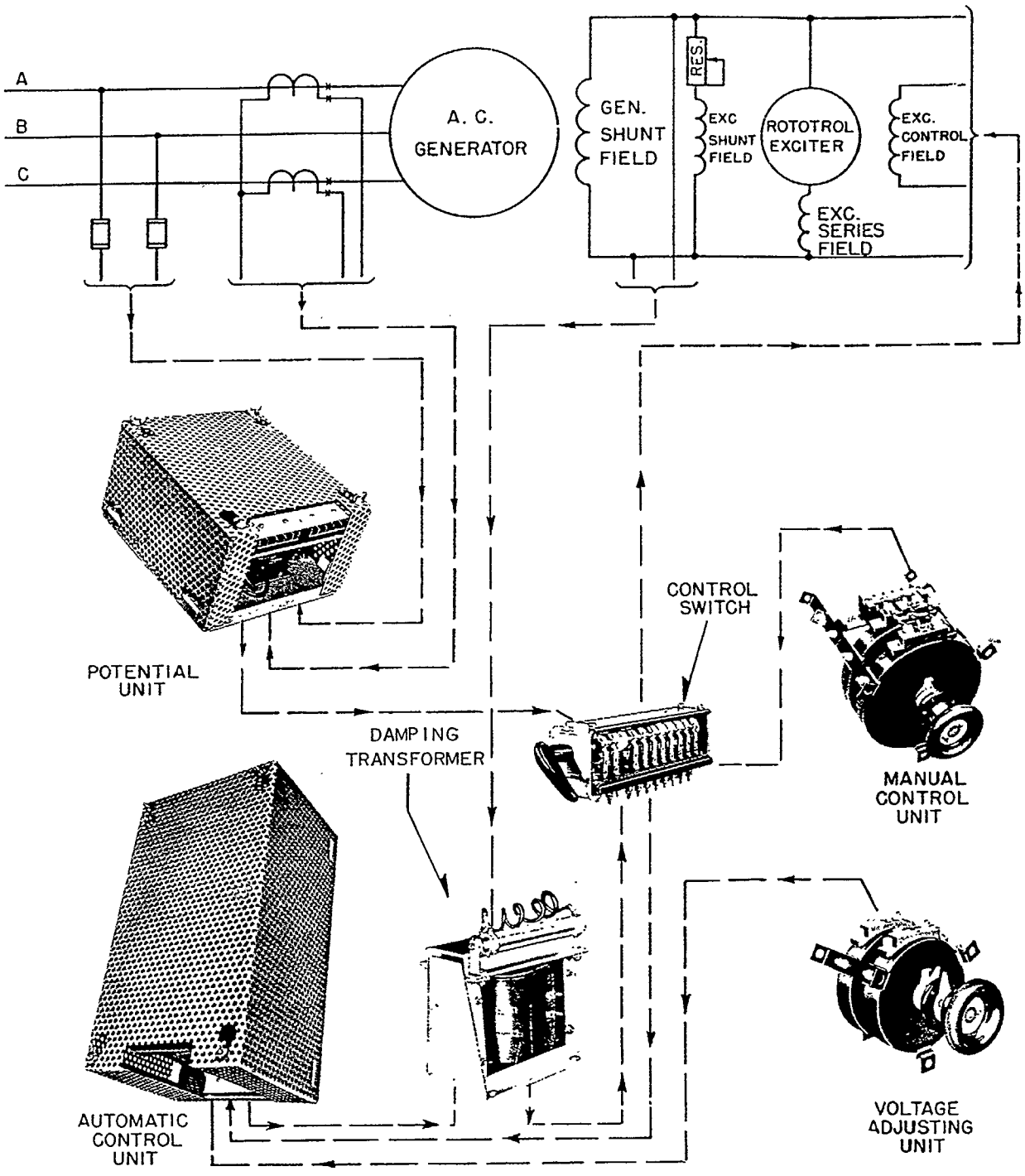

Fig. VR-4 — Pictorial Schematic Diagram

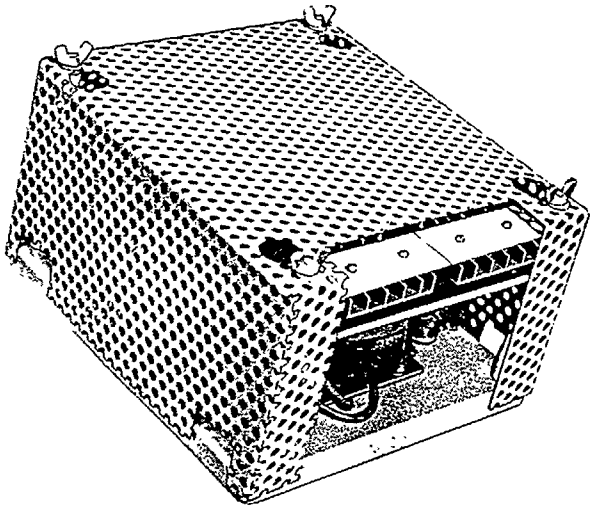

FIG. VR-8 — Potential Unit

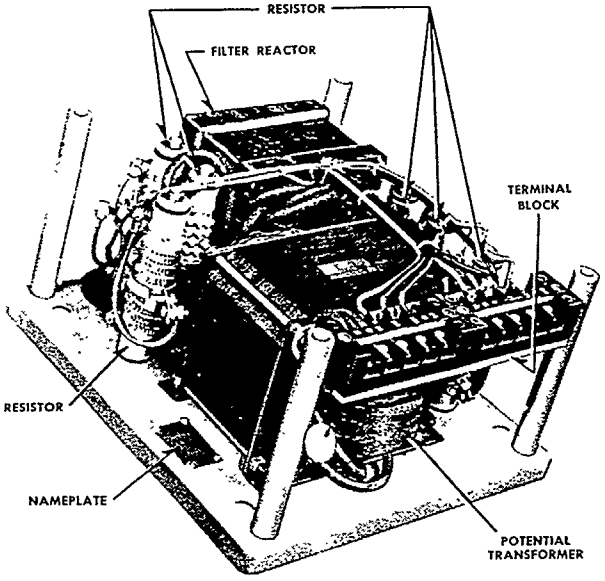

FIG. VR-9 — Potential Unit — Cover Removed

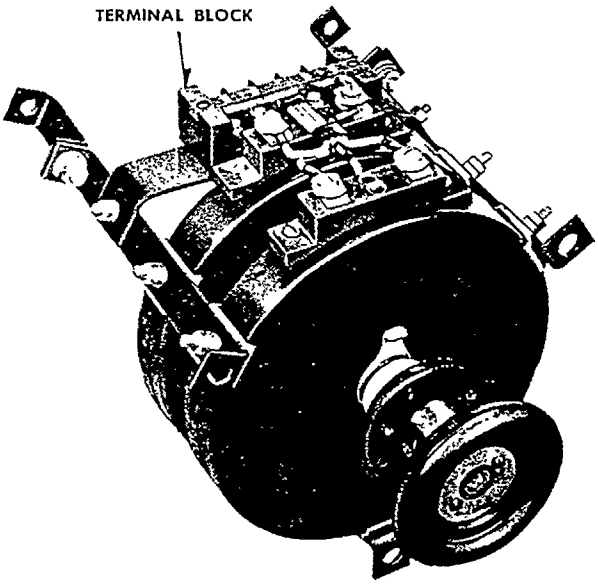

FIG. VR-10 — Manual Control Unit — Front View

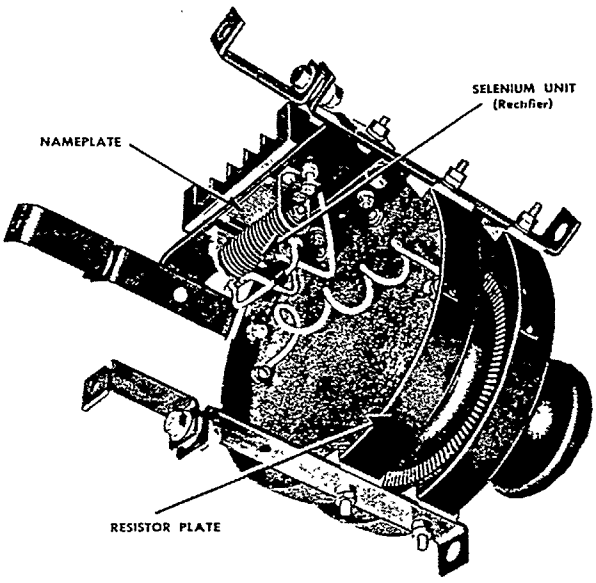

FIG. VR-11 — Manual Control Unit — Rear View

4B8. DAMPING TRANSFORMER

a) The damping transformer assembly consists of a damping transformer with a adjustable resistor mounted on its frame (Fig. VR-14).

b) This transformer consists of a primary winding and a secondary winding each with the same number of turns.

c) The adjustable resistor is connected in series with the primary winding providing a means of adjusting the damping action of the transformer.

4B9. SPECIFICATION TABLE

a) The following specifications and weights are applicable to the component parts. For additional data, see Master Plan and Certification Data.

Apparatus	BuShips Spec. No.	Weight (Pounds)
Automatic Control Unit	MIL-R-2729	125
Potential Unit	MIL-R-2729	60
Manual Control Unit	MIL-R-2729	12.5
Voltage Adjusting Unit	MIL-R-15109	9.5
Current Transformer	MIL-I-1361	See Cert. Data
Control Switch	MIL-S-18396	5.5
Damping Transformer	MIL-T-16315	75

f) This shows how an incorrect value of a-c line voltage impressed on the automatic control unit, causes a corrective action to be applied to the a-c generator excitation system. The following paragraphs explain the individual units in detail.

4C2. ROTOTROL EXCITER

a) The ROTOTROL exciter is a four-pole, d-c generator of special design. The major features which distinguish the ROTOTROL exciter from a normal exciter are the special field windings and the laminated-steel frame.

b) The ROTOTROL exciter can be explained by reference to a conventional d-c generator which has only a single field winding as shown in Fig. VR-17. Field and brush polarity are shown on this figure. This figure shows a single field circuit that may be excited or energized in a number of ways. It may be connected in series with the armature and excited from armature current, as a series field; or across the armature and excited from the armature voltage as a shunt field. Another possibility is to excite the field from a separate source of voltage. It may be used to represent either the ROTOTROL series field or its shunt field.

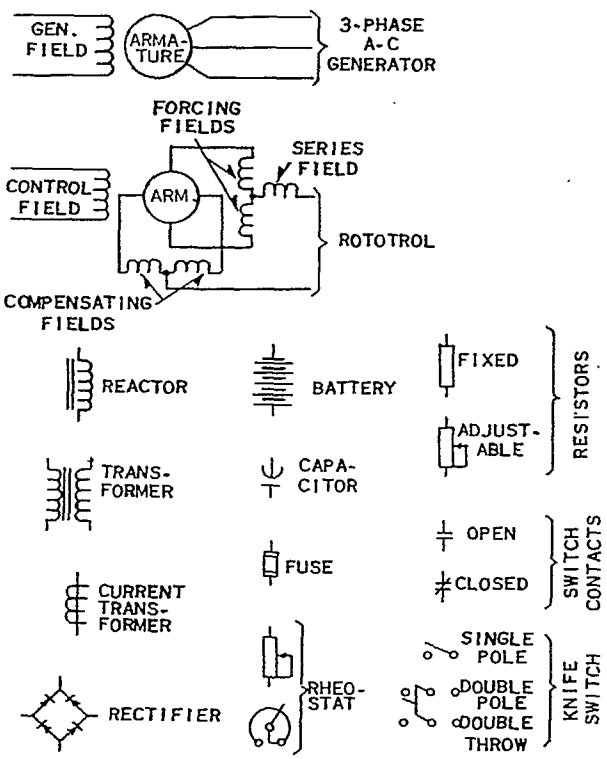

FIG. VR-16 — Diagram Symbols

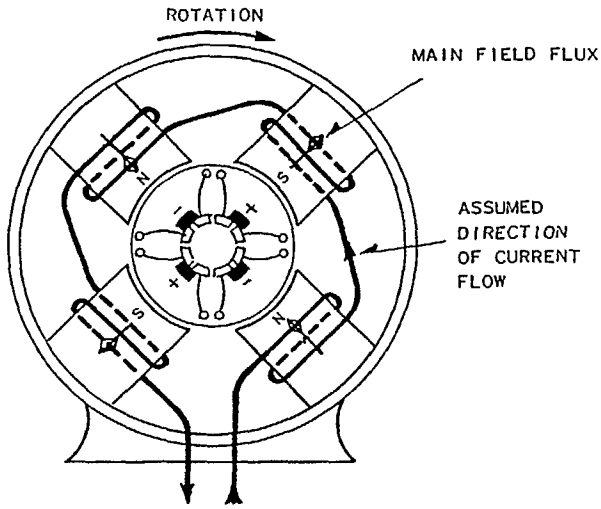

FIG. VR-17 — Field Winding Diagram of Conventional D-C Generator

c) Only a few slots, armature conductors and commutator segments are shown in the figure. A large number of slots, etc., will be used in the machine but showing them on this figure would unnecessarily complicate it.

d) A schematic diagram for the d-c generator is shown in Fig. VR-18 (a). If this generator is driven at constant speed, its armature voltage will vary with field current as shown in Fig. VR-18 (b). For field current up to the value "Ia" of the figure corresponding to part "A" on the saturation curve, the voltage is proportional to field current. At field currents above this value the iron becomes "saturated" and additional field current is less effective in producing voltage.

e) The ROTOTROL exciter is operated over an armature voltage range corresponding to the region below "A" of the saturation curve. This permits "tuning" of the machine. A ROTOTROL is said to be tuned when it has self-energized field windings such that for any armature voltage the flux produced is just sufficient to sustain that voltage. Such a circuit is illustrated in Fig. VR-19 (a). In this circuit the load current passes through the series field which provides part of the field magnetization corresponding to "SF" in Fig. VR-19 (b). The remaining required magnetization is obtained by proper adjustment of the shunt field rheostat. When adjusted properly the two fields together will supply all of the field magnetization required up to the voltage where the saturation curve is no longer linear. These two fields are conventional four-pole fields as the one shown in Fig. VR-17.

to energize another special field called the "forcing field". This field is shown in Fig. VR-20 (b). It acts to increase the flux in each pole, or decrease the flux in each pole, depending upon the polarity of the control field. In Fig. VR-20 (b) it is shown as increasing the flux in each pole, thus raising the generated voltage.

h) The flow of forcing current through the armature winding causes an armature reaction reducing flux in one north pole and increasing flux in the other. This causes a voltage to be generated between the negative brushes. If unopposed, the resulting current flow between the two negative brushes, would cause an armature reaction in opposition to the control field. This opposition would greatly reduce the effect of the control field if not compensated for in some way. The coils shown in series with forcing fields in Fig. VR-20 (c), called "compensating coils", oppose this armature reaction due to forcing current. The compensating coil fields then act to hold the voltage between the negative brushes, and the armature reaction which would oppose the control field, to a minimum.

i) A group of fields are connected in series between the negative brushes. They are compensating fields that operate similarly to the compensating fields mentioned above. They are shown in Fig. VR-20 (d).

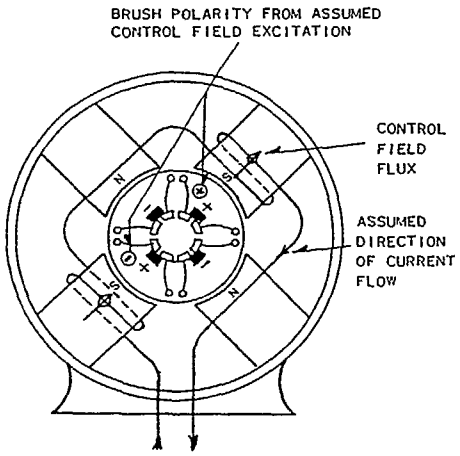

ROTOTROL EXCITER CONTROL FIELD WINDING

(a)

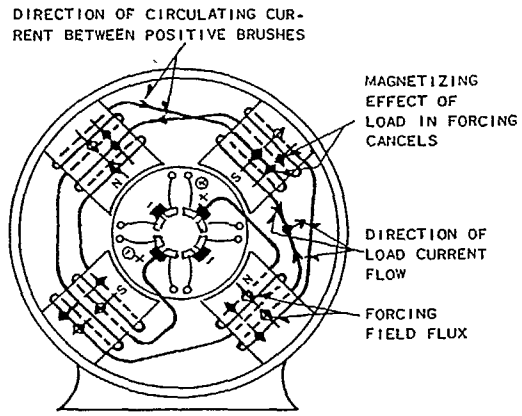

ROTOTROL EXCITER FORCING FIELDS CONNECTED IN SERIES BETWEEN THE POSITIVE BRUSHES

(b)

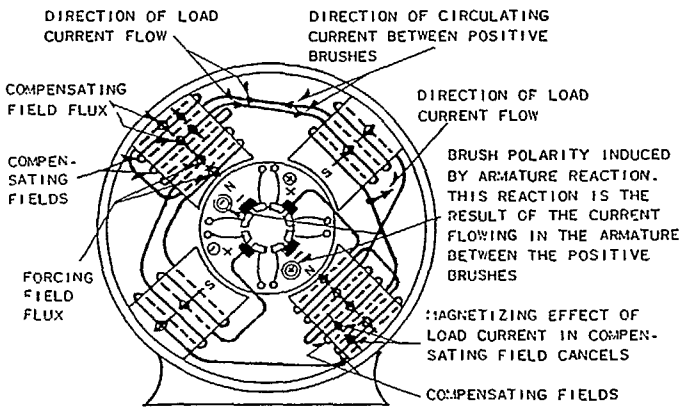

ROTOTROL EXCITER FORCING AND COMPENSATING FIELDS CONNECTED IN SERIES BETWEEN THE POSITIVE BRUSHES

(c)

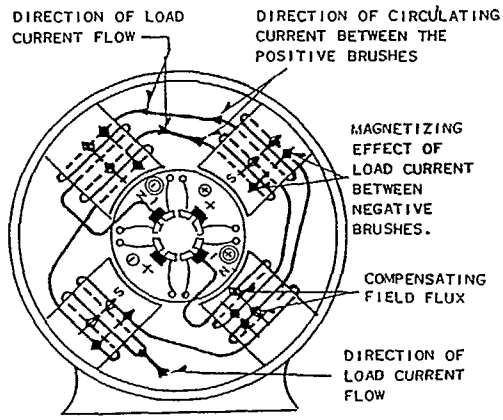

ROTOTROL EXCITER COMPENSATING FIELDS CONNECTED IN SERIES BETWEEN THE NEGATIVE BRUSHES

(d)

FIG. VR-20 — Field Winding of ROTOTROL Exciter

tive brushes. This current flowing through the forcing fields on all four poles raises the flux, and thus the ROTOTROL exciter output voltage. When the a-c generator field current has been raised to the proper value, producing normal a-c generator voltage, the output of the regulator to the ROTOTROL control field will decrease to approximately zero. As a result, the forcing field current will also fall to a small value. The ROTOTROL series and shunt self-energizing fields will sustain the output voltage at the new condition.

4C3. VOLTAGE REGULATOR

a) Automatic Control Unit

The automatic control unit will be explained first because it is the voltage-sensitive element and this is the heart of the regulator.

1. FUNDAMENTAL CONCEPTS

A review of some of the basic parts used in building up an electrical device will be included here to assist in comprehending the automatic regulator operation.

a. Capacitor

1. A capacitor is made up of two conducting surfaces separated by an insulator called a "di-electric". A property of a capacitor is that even though no current can flow through it, it can absorb and hold a charge or quantity of electricity. Thus, when a direct-current voltage is applied across a capacitor, a current will appear to flow for a short time. This current is called the charging current (see Figs. VR-22 (a) and (b)). The magnitude of this current will depend upon the physical properties of the capacitor such as size of plates, their separation, the material used for a dielectric, etc., and of course, the voltage applied. These physical properties determine the characteristic known as capacitance. Capacitance will be discussed more latter.

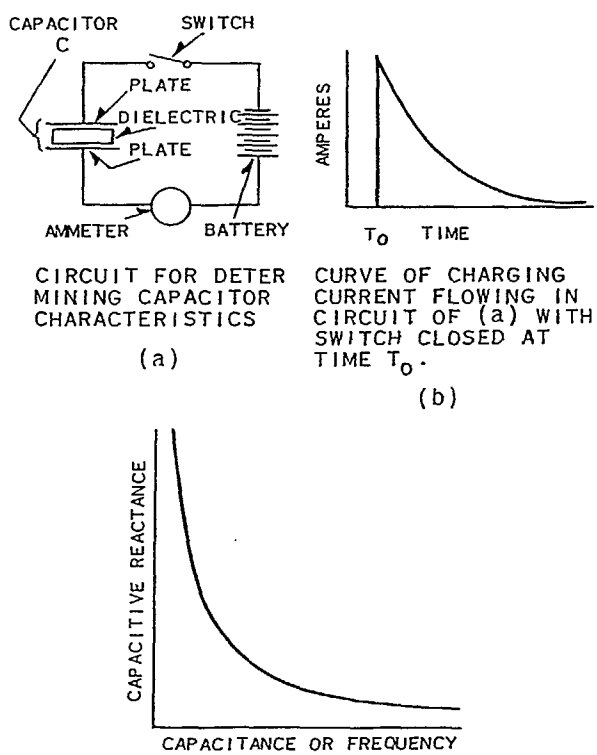

CIRCUIT FOR DETERMINING CAPACITOR CHARACTERISTICS

(a)

CURVE OF CHARGING CURRENT FLOWING IN CIRCUIT OF (a) WITH SWITCH CLOSED AT TIME T_0.

(b)

CURVE SHOWING HOW THE REACTANCE OF A CAPACITOR VARIES WITH CAPACITANCE OR FREQUENCY.

(c)

FIG. VR-22 — Capacitor Characteristics

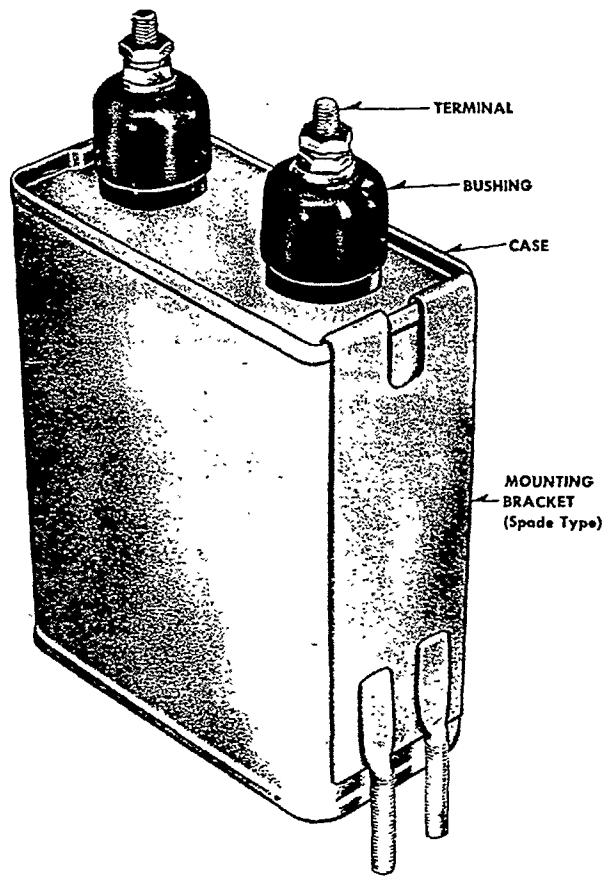

FIG. VR-23 — Capacitor

build up only a short way on the curve of Fig. VR-24 (b). Thus, the greater the inductance of a reactor, the lower will be the current resulting from a certain alternating voltage.

5. Another feature is that as the frequency is increased, less time is allowed for the current to rise. Thus, the higher the frequency the greater the opposition to current flow or the greater the inductive reactance.

6. To review, the inductive reactance of a reactor depends upon the inductance and the frequency. The manner in which the inductive reactance varies with inductance and frequency is shown in Fig. VR-24 (c).

7. Fig. VR-24 shows a typical reactor. The coil and iron are indicated as are the leads used for circuit connections.

c. Saturated Reactor

1. A reactor that has an iron core will have much more inductance than the same coil without the iron. However, if the voltage across the reactor coil is increased, the current through the coil and the voltage across it will be proportional only for a limited range. Fig. VR-26 (a) shows a circuit that may be used to investigate the relationship between voltage and current of an iron core reactor. As the voltage (E) of this figure is varied, the voltmeter and ammeter are read and recorded. Fig. VR-26 (b) shows a typical curve determined in this manner.

2. This reactor has an unusual property in the saturated region. Here a slight change in voltage will result in a large change in current. This is indicated on Fig. VR-26 (b). Thus a change in voltage from 50 to 60 per cent results in a small change in current flow from i_1 to i_2. An equal change in voltage from 100 to 110 per cent will result in a current change from i_3 to i_4 which is much greater than the change from i_1 to i_2. This property is utilized in the regulator as will be shown later.

3. The saturating reactor used in the regulator is shown in Fig. VR-27.

d. Rectifier

1. The control field of the ROTOTROL exciter requires a direct-current voltage to control the exciter output. Since the regulator is energized entirely by alternating current, a device for changing alternating current to direct current is necessary. This device is a rectifier.

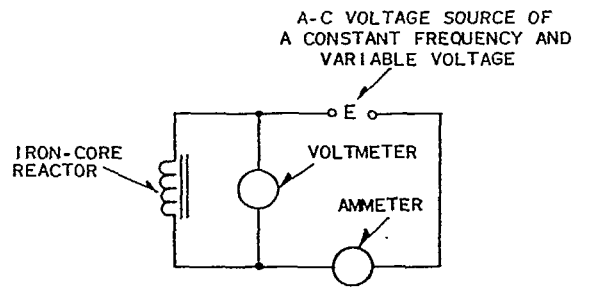

CIRCUIT FOR DETERMINING
CHARACTERISTICS OF IRON-CORE REACTOR

(a)

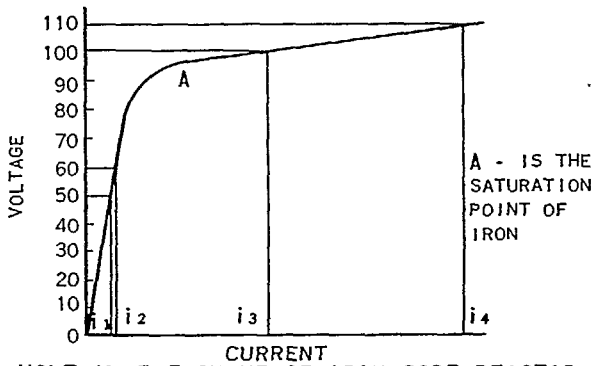

VOLT-AMPERE CURVE OF IRON-CORE REACTOR
SHOWING SATURATION OF THE IRON

(b)

FIG. VR-26 — Characteristics of an Iron-Core Reactor

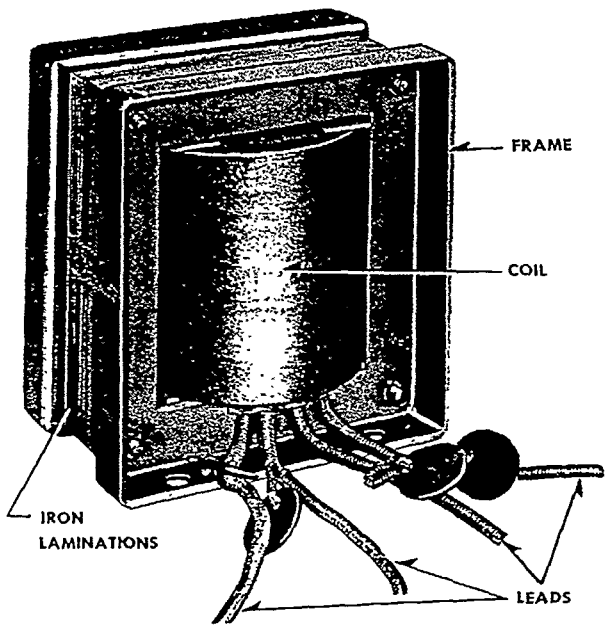

FIG. VR-27 — Saturating Reactor

incide on the vector diagram. However, should (e_s) become larger than (e_n), (c) and (g) would no longer coincide as is indicated by the dashed voltage gradient line. In this case (g) will be positive with respect to (c). The reverse will occur with a lower voltage on (e_s) than on (e_n).

3. THE AUTOMATIC CONTROL CIRCUIT

The automatic control circuit, Fig. VR-33 is a combination and modification of the circuits shown in Figs. VR-30 and VR-32 (a). The elements added are:

a. An Insulating Transformer I.T. (shown in the capacitor branch).

This transformer is necessary in one branch since the d-c rectifier terminals are connected together, and a common a-c source is used for both branches of the circuit. If this transformer were not used, it would be possible to have a near short-circuit across the a-c line. The current under this condition would be limited only by the forward resistance in two rectifier legs plus the small resistance in one side of the d-c circuit. The use of this transformer isolates the a-c line from the rectifier in one branch. This eliminates a metallic path between the two a-c lines through the rectifiers.

b. The Reactors (R) (in the d-c circuit).

Their purpose is to reduce the a-c ripple in the d-c voltage.

c. The ROTOTROL Control Field.

This field raises or lowers the exciter output voltage. The control field is connected across terminals (NAR) and (NAL) of Fig. VR-34 which corresponds to (c) and (g) of Fig. VR-32 (a). The performance of the circuit can be explained for the following three conditions.

1. With the a-c voltage at a value corresponding to (E) of Fig. VR-31 on the a-c line terminals, no d-c voltage will appear across the ROTOTROL control field and thus no corrective action will result.

2. With high a-c voltage, say (E+V), on the line terminals, (NAL) will be positive with respect to (NAR) and will pass a current through the ROTOTROL control field in the "lower" direction. In other words, the "lower" current of Fig. VR-33 exceeds the "raise" current. This will be in the direction to cause the generator field excitation to be lowered and thus restore generator voltage to its proper value.

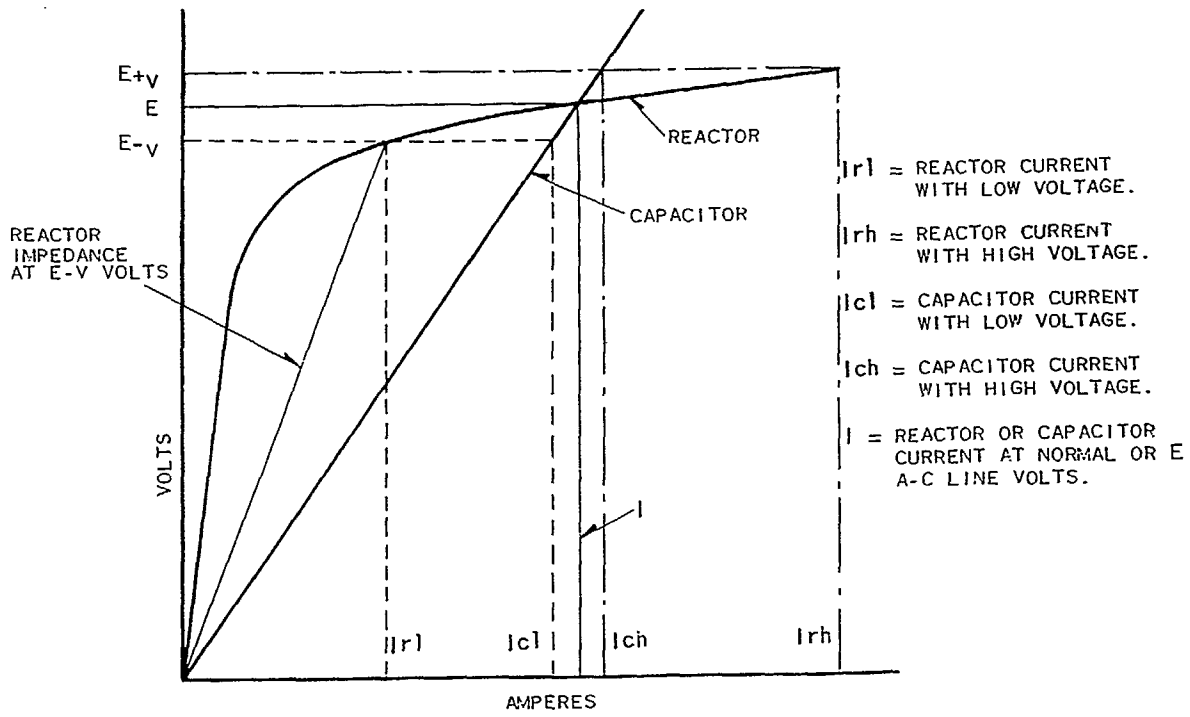

FIG. VR-31 — Volt-Ampere Characteristics of a Capacitor and a Saturated Reactor

corresponding change in the voltage drop across them. This change in voltage drop added to the line voltage of varying frequency impresses the correct voltage in the voltage-sensitive circuit for that frequency.

d. Fig. VR-35 (a) shows the circuit elements lumped in boxes. This is done for convenience in showing the vector diagram to explain the frequency compensation more rigorously.

e. The vector diagram of Fig. VR-35 (b) includes the three conditions of low, normal and high frequency. The voltage across the voltage-sensitive network is used as the reference voltage. Its variation with frequency is clearly shown on this diagram. The capacitor and reactor vectors change in length with frequency as explained above.

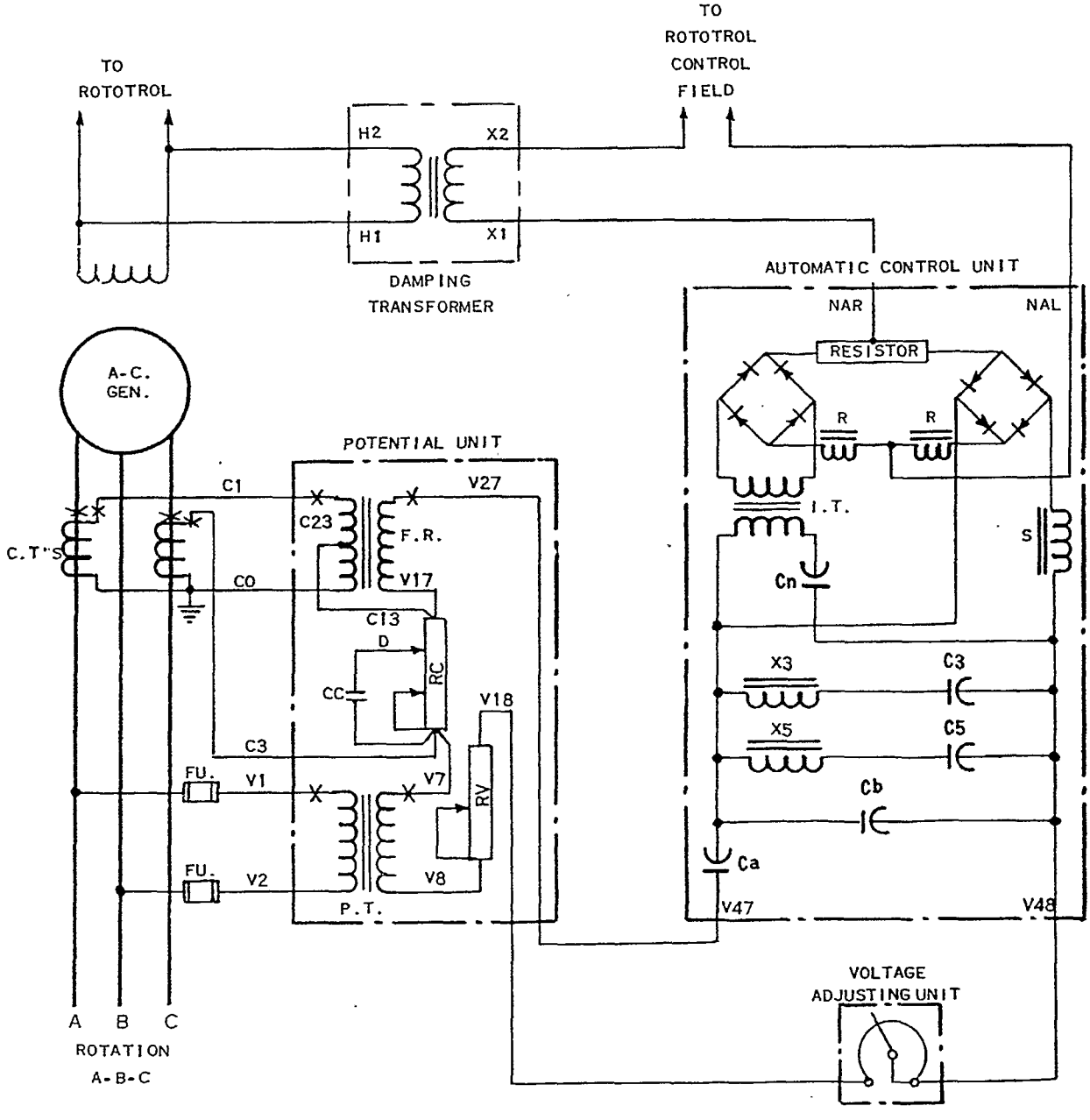

FIG. VR-34 — Schematic Diagram of Regulator

3. With the voltage adjusting rheostat, the resistance between the generator terminals and (V-47 to V-48) can be changed, causing a proportional change in voltage drop. This drop necessitates a change in the a-c generator voltage to produce the required voltage across (V-47 and V-48). Thus, the a-c generator voltage can be set to any operating value, by adjusting the rheostat.

c) The Potential Unit

The potential unit receives its energy directly from the a-c generator bus. The unit consists of the following parts:

1. THE POTENTIAL TRANSFORMER

The potential transformer (P.T.) is a two-winding transformer that supplies energy to the entire circuit.

2. THE VOLTAGE ADJUSTING RESISTOR

The voltage adjusting resistor, (RV) performs electrically the same as the voltage adjusting unit explained in Paragraph b, page 420. It permits adjustment of the generator terminal voltage to the minimum desired value with the voltage adjusting unit shorted. It thus determines the location of the range of a-c generator voltage adjustment.

3. POSITIVE-SEQUENCE FILTER FOR THREE-PHASE RESPONSE

a. The automatic control unit used in the "WRN-11" regulator responds to single-phase voltage. Since the a-c generator load is frequently not balanced between the three phases the voltage drops in the windings may be different, thus, its three terminal voltages are not always equal. If the automatic control unit were connected across one phase of the generator only, that phase would be regulated for constant voltage. The other phase voltages would differ by the amount of the unbalance. In the "WRN-11" voltage regulator, a single-phase voltage is used but a correction is introduced to compensate for unbalance. The resultant voltage which is measured by the regulator may be considered as being proportional to a balanced three-phase voltage, called "positive-sequence voltage". This is the voltage actually generated in the machine windings.

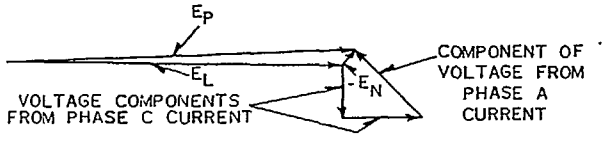

E_L = GENERATOR LINE VOLTAGE CONTAINS BOTH POSITIVE AND NEGATIVE SEQUENCE VOLTAGES THAT IS $E_L = E_P + E_N$.

E_P = POSITIVE SEQUENCE VOLTAGE IS OBTAINED BY SUBTRACTING E_N FROM E_L OR $E_P = E_L - E_N = E_P + E_N - E_N = E_P$.

CURRENT-PRODUCED VOLTAGE DROPS YIELD $-E_N$. THE REVERSE NEGATIVE SEQUENCE VOLTAGE. THE REVERSE VOLTAGE IS OBTAINED BY SELECTING THE PROPER CONNECTIONS. THEY ARE EXAGGERATED ON THIS DIAGRAM FOR CLARITY.

FIG. VR-37 — Vector Diagram of Positive-Sequence Filter

b. Fig. VR-34 shows the two current transformers which energize the mutual reactor (F.R.) and resistor (RC). These elements are connected in series with the potential transformer (P.T.) to form a positive-sequence filter. Thus the voltage across (V8-V27) is proportional to the positive-sequence voltage of the generator and is not affected by voltage unbalance. This makes the regulator sensitive to the three-phase voltage rather than to only a single-phase voltage.

c. The mutual reactor (F.R.), as seen in Fig. VR-34 has a winding that is energized from both the (A and C) phase-current transformers. The flux produced by this current-transformer-energized winding induces a voltage in the other winding between (V17 and V27). This induced voltage is added to the drop in resistor (RC). Their sum is proportional to the negative-sequence voltage at the generator terminals (See Fig. VR-37). The negative-sequence voltage is the component of the three-phase voltage which represents the unbalance in voltage resulting from load unbalance. It is subtracted from the generator voltage to give the positive-sequence voltage across (V8-V27).

4. PARALLEL OPERATION OF A-C GENERATOR

a. When generators are operated in parallel their kilowatt-load division will depend upon the prime movers. The reactive-load division will depend upon their field excitation or, in other words, their automatic regulators when they are used.

b. The condition existing on two similar generators with unequal field currents is that the generator with the higher field current will have a greater voltage induced in its windings. If they are in parallel, the higher-voltage machine will force a current through the windings of both machines. This current, limited primarily by the impedance of the windings which are

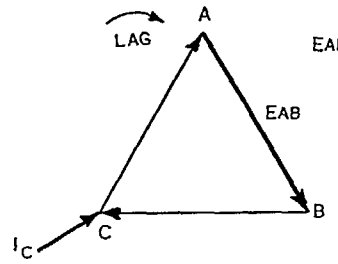

VECTOR DIAGRAM OF A-C GENERATOR VOLTAGE SHOWING THE POSITION OF PHASE (C) CURRENT AT UNITY POWER FACTOR

(a)

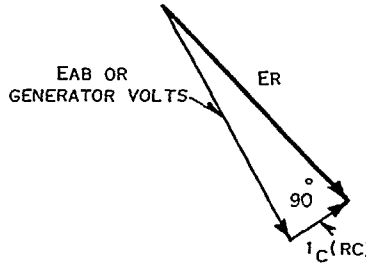

$I_{C(RC)}$ = VOLTAGE DROP ACROSS RESISTOR RC ENERGIZED BY PHASE C CURRENT SHOWN AT UNITY POWER FACTOR LOAD IN THE DIAGRAM. IT IS SHOWN EXAGGERATED FOR CLARITY.

ER = VOLTAGE TO WHICH REGULATOR RESPONDS AND WHICH IS HELD CONSTANT IN MAGNITUDE

VECTOR DIAGRAM SHOWING REACTIVE DROOP COMPENSATOR DROP AT UNITY POWER FACTOR

(b)

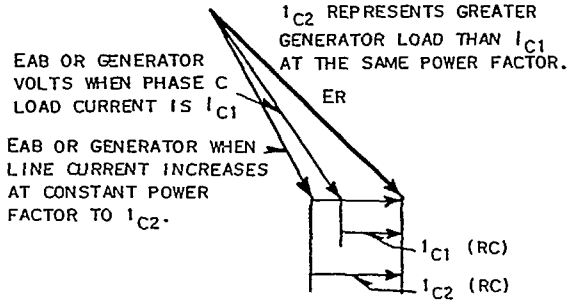

VECTOR DIAGRAM SHOWING OPERATION OF THE REACTIVE DROOP COMPENSATION AS GENERATOR LOAD CURRENT CHANGES AT CONSTANT POWER FACTOR.

(c)

h. In the "WRN-11" the reactive-droop compensator is the resistor (RC) in the potential unit. To introduce droop in the generated voltage with an increase in lagging load current, the contacts (CC) are closed, which shorts out resistance. The resistor drop I_C (RC) is subtracted from the line voltage as explained in paragraph c-3c, page 421. Thus, shorting out a portion of (RC) has the effect of adding a resistance drop to the line voltage.

d) Manual Control Unit

1. The manual control unit provides an alternate method of a-c generator voltage control. It will maintain essentially constant excitation voltage. For a constant a-c generator load, this will result in constant a-c voltage. Load changes will require adjustment of the manual control unit to provide constant output voltage.

2. The circuit of the manual control unit is illustrated in Fig. VR-40 (a). The principle of

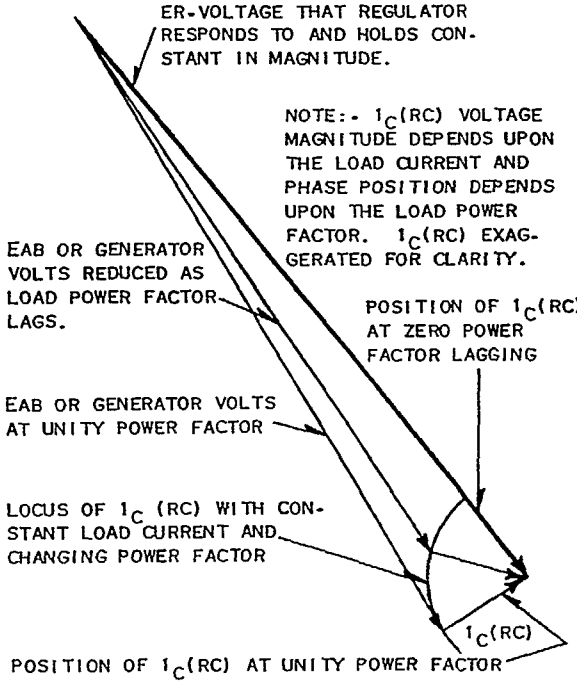

VECTOR DIAGRAM SHOWING OPERATION OF THE REACTIVE DROOP COMPENSATOR AS THE GENERATOR LOAD POWER FACTOR CHANGES AT CONSTANT LOAD CURRENT

(d)

FIG. VR-39 — A-C Generator Vector Diagrams (showing various power factor conditions)

operation is based on the fact that the voltage across a rectifier unit remains essentially constant over a wide range of current. The rectifier (R1), in series with a fixed resistor, is connected across the ROTOTROL output. The voltage across this rectifier is compared with the voltage across the section of the potentiometer between the potentiometer tap and the positive line.

3. The drop across any section of the potentiometer will vary with the exciter voltage. When the ROTOTROL armature voltage is such that the voltage across the specified section of the potentiometer equals the voltage across the rectifier (R1), there will be no current through the ROTOTROL control field and thus no tendency to change the ROTOTROL voltage, hence the a-c generator excitation. If the ROTOTROL voltage is low, the voltage drop across the section of the potentiometer is lower than the voltage across rectifier (R1). This will cause a current to flow through the ROTOTROL control field in the "raise" direction as shown in Fig. VR-40 (b). This control field current will cause the exciter voltage to increase, returning it to the original balanced value. An increase in exciter voltage will cause the opposite sequence of events and result in return to normal voltage, see Fig. VR-40 (c).

4. Rectifier (R2) enables the operator to control the a-c generator voltage with reversed polarity on the ROTOTROL.

5. Adjustment of the potentiometer tap permits a change in the exciter voltage. Under manual control the a-c generator voltage can be adjusted to any value from zero to the maximum determined by the saturation of the exciter, which is much higher than required by the specifications.

6. A photograph of the manual control unit is shown in Fig. VR-10, page 405. The two recti-

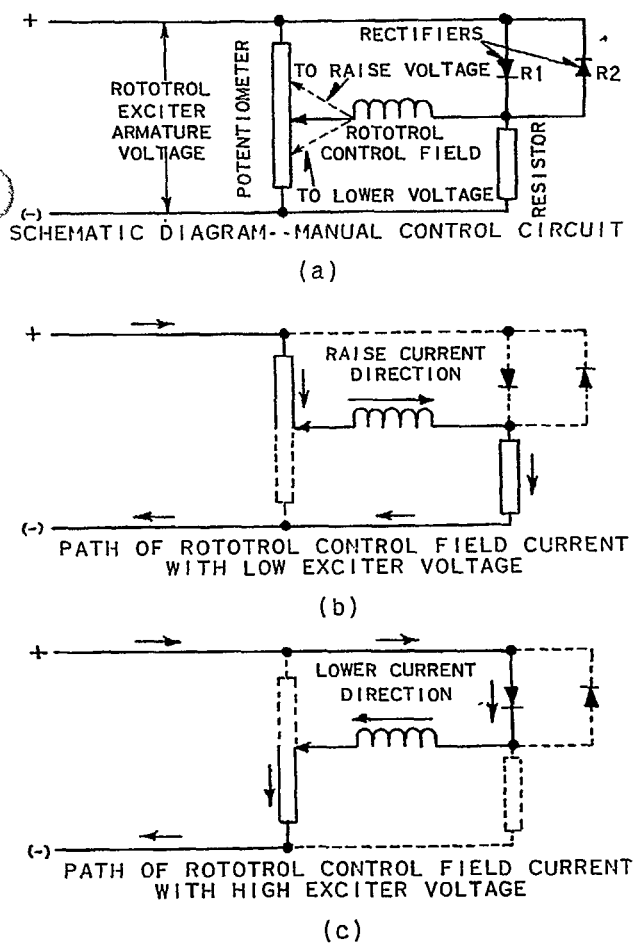

FIG. VR-40 — Schematic Diagrams of Manual Control Unit ("Raise" and "Lower" Conditions)

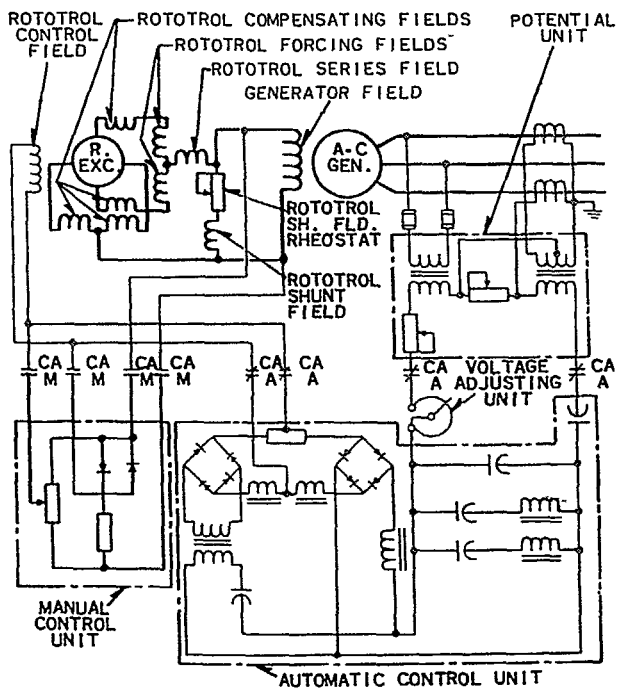

SCHEMATIC DIAGRAM OF VOLTAGE REGULATOR SYSTEM SHOWING MANUAL AND AUTOMATIC CONTROL UNITS. THE REGULATOR CONTROL SWITCH (CA) IS TURNED TO "AUTO" PLACING THE AUTOMATIC REGULATOR IN CONTROL. ALL ENERGIZED CIRCUITS ARE SHOWN IN RED.

FIG. VR-41 — Schematic Diagram Showing Automatic Operation

fier sections referred to in the above description are actually one rectifier stack with a tap. Reference to the diagram of Fig. VR-40 (a) will show how this is possible. The component parts are indicated on the photograph of Fig. VR-11, page 405.

e) Damping Transformer Assembly

1. The primary winding of the damping transformer with an adjustable series resistor is connected across the a-c generator field. The secondary winding is connected in series opposition with the output of the automatic control unit. Any change in the generator field voltage produces a current which opposes the output current of the automatic control unit.

2. The desired amount of damping is obtained by changing the value of the series resistance.

f) Wiring Diagrams

1. Fig. VR-41 shows a typical wiring diagram of the voltage regulator system. This figure shows all of the energized circuits in red for automatic voltage regulator control. The manual control circuit is shown as not energized. Turning the regulator control switch (CA) to MAN transfers the control from the automatic regulator to the manual control unit. This condition is shown in Fig. VR-42.

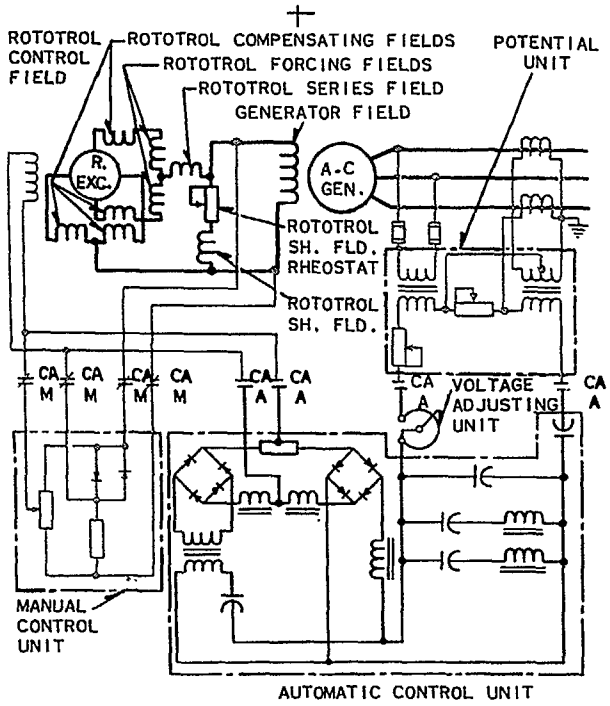

SCHEMATIC DIAGRAM OF VOLTAGE REGULATOR SYSTEM SHOWING MANUAL AND AUTOMATIC CONTROL UNITS. THE REGULATOR CONTROL SWITCH (CA) IS TURNED TO 'MAN' PLACING THE MANUAL CONTROL UNIT IN CONTROL OF THE ROTOTROL EXCITER VOLTAGE. ALL ENERGIZED CIRCUITS ARE SHOWN IN RED.

FIG. VR-42 — Schematic Diagram Showing Manual Operation

SEC. D—OPERATING INSTRUCTIONS

4D1. INITIAL OPERATION

a) The following steps should be observed in starting a generating system either the first time or after repairs have been made.

1. Generator With Regulator

STEP 1. Be sure the generator line circuit breaker is open or no load is connected to the generator. .

STEP 2. Turn the regulator control switch (CA) to MAN.

STEP 3. Turn the voltage adjusting unit to extreme LOWER.

STEP 4. Turn the manual control unit to extreme LOWER.

STEP 5. Start the prime mover and bring it up to rated speed.

STEP 6. Turn the manual control unit to the extreme RAISE position. When the generator voltage starts to rise turn the handle back toward LOWER. Set the generator voltage at 450 volts. Mark the position of the manual control unit handle.

STEP 7. Set the handle of the voltage adjusting unit close to the LOWER stop.

STEP 8. Turn the regulator control switch (CA) to AUTO. The generator voltage is then under automatic regulator control. The voltage may not be 450 volts but the voltage adjusting unit can be used to adjust this voltage. Mark the position of the voltage adjusting handle for 450 volts. Turn the handle to the extreme LOWER and RAISE positions. The generator voltage should vary from not more than 436 volts to at least 482 volts. If this range is not met the following procedure should be used:

Turn the voltage adjusting unit to the extreme LOWER position. The generated voltage at 60 cycles per second should be between 430 and 436 volts. If it is not, adjust the tap of the resistor (RV).Shorting-out resistance lowers the voltage. Be sure to de-energize the unit before working on it.

2. Single Generator Under Load

a. The no-load checks on the regulating system should be made before load is applied. When applying load to the generator for the first time, the following procedures should be used:

STEP 1. Remove the parallel operation jumper between (C3 and D) on the potential unit terminal block.

STEP 2. Turn the regulator control switch (CA) to MAN.

STEP 3. Turn the manual control unit to extreme LOWER.

STEP 4. With the generator disconnected from the bus, bring the prime mover up to speed. Bring the voltage up to 450 volts with the manual control unit.

STEP 5. Apply load, maintain 450 volts and normal frequency.

STEP 6. Remove load, still maintaining 450 volts.

STEP 7. Set the regulator control switch (CA) to AUTO.

STEP 8. Adjust the voltage to 450 volts by the voltage adjusting rheostat.

STEP 9. Apply load at a power factor between rated and unity. Hold normal frequency and increase the load to full load. The difference between the maximum and minimum of the average of the three-phase voltage observed from no load to full load should not exceed nine volts. Should the voltage not meet this requirement, the load voltages may be raised by increasing the resistance in (RC).

STEP 10. Turn the voltage adjusting rheostat to each extreme. The voltage range should at least be 436 to 482 volts.

3. Parallel Operation Of Generators

a. The reactive-droop compensators should be used when generators are to be operated in parallel. This will cause equal division of reactive load between generators. Each generator to be operated in parallel should be checked in the following manner:

STEP 1. A new or repaired generating system should be checked as described in paragraphs 4D1 a 1 and 2 before operation in parallel.

STEP 2. Replace jumper between (C3 and D) on the potential unit terminal block. This puts the reactive-droop compensator into operation.
STEP 3. Place the system in operation under automatic regulator control. Set the voltage at 450 volts and 60 cycles per second. Keep the generator speed constant.
STEP 4. Apply rated load at rated power factor. Note the generator voltage, it should be approximately 4 per cent low or 432 volts. To reduce the load voltage reduce the resistance in resistor (RC) between terminals C13 and D.
STEP 5. Repeat steps 1 to 4 inclusive on the other generator. The full-load voltage on the generators should be equal or very nearly equal. (If the no-load voltage is not the same on the two generators, the change in voltage as load is applied should be compared.)
STEP 6. If the changes in voltage on the two generators are not more than one volt different, they are ready to be operated in parallel.
STEP 7. When two unloaded generators can be paralleled the following procedure gives a satisfactory means of adjusting the reactive droop compensation:

(a) Follow steps 1, 2 and 3 above for Gen. A.

(b) Bring the second generator, Gen. B, up to speed and bring its voltage up under manual voltage control as described in "Initial Operation" on page 426. Switch generator B to automatic regulator control. Keep both machines running at 60 cycles per second throughout the test.

(c) Set the voltage of each generator to 450 volts and parallel the two machines.

(d) Place generator B under manual control. Turn the manual control in the LOWER direction until the ammeters indicate a circulating current of 60% of the rating of one generator.

(e) Note this voltage. It should be about 432 volts (4% droop).

(f) Return the voltage to 450 volts with the manual control of generator B.

(g) Switch generator B to automatic regulator control and generator A to manual control.

(h) Turn the manual control of generator A in the LOWER direction until the same value of current obtained in step (d) is reached.

(i) The voltage should now be within one volt of the value obtained in step (e). If not, adjust resistance (RC) in the regulator for generator B between terminals C13 and D.

(j) Return the voltage to 450 volts with the manual control of generator A.

(k) Switch generator A to automatic regulator control.

(l) The generators are now ready to be operated in parallel to a load.

4D2. NORMAL OPERATION

a) New or repaired equipment should be checked as described under "Initial Operation" page 426. Equipment that has not been used for a considerable time should also be checked as above. After the initial checks have been made the regulating system may be operated according to the following procedure.

1. Single Generator Operation—Ship's Service Generators

STEP 1. Be sure the generator line circuit breaker is open or no load connected to the generator and the regulator control switch (CA) is turned to MAN.
STEP 2. Be sure the voltage adjusting unit and manual control unit are turned to the position marked for 450 volts.
STEP 3. If the generator is to be operated in parallel be sure the jumper is on the potential unit terminal block between (D and C3). If it is not to be operated in parallel, remove this jumper.
STEP 4. Start the prime mover and bring it up to speed.
STEP 5. Turn the regulator control switch (CA) to AUTO. If the voltage is not 450 volts adjust it with the voltage adjusting unit.
STEP 6. Close the generator circuit breaker. The generator is ready to be loaded.
STEP 7. If the generator is to be operated on manual control, it will require adjustment as the generator load is changed to maintain 450 volts.

2. Single Generator Operation—Emergency Generators

STEP 1. Start the prime mover and bring it up to speed. If shutdown procedure outlined below (4D25) has been followed, the generator terminal voltage should come up to 450 volts and remain there under control of the regulator.

3. Parallel Operation—Ship's Service Generators Only

The following procedure is to be followed for paralleling a generator with a bus or another generator.

b. If the trouble still persists, take the faulty generator out of operation. Check the circuit as described under "Trouble Shooting".

2. LOW SYSTEM VOLTAGE

a. Under this condition one generator will have a very low "leading" power factor. Switch the control of the generator with leading power factor to manual control with the manual control handle set for normal voltage. Equalize the power factor meter readings with the manual control.

b. If the trouble still persists, take the faulty generator out of operation. Check the circuit as described under "Trouble Shooting".

4D4. TROUBLE SHOOTING CHART

a) Single-Machine Operation

It is very unlikely that trouble will be encountered on more than one regulator under parallel operation, consequently a trouble shooting chart for a single regulator will be given first and a short treatment of parallel operation will follow. SECURE THE BOARD before checking any circuits or replacing any parts.

The ROTOTROL brushes should all be raised if the machine is to be run for mechanical checks or any time when the voltage is not intended to be controlled by the regulator or the manual control. The ROTOTROL should never be rotated in the direction opposite to that specified.

1. REGULATOR CIRCUIT CHECK

The regulator can be checked as a unit according to the following procedure:

a. Remove the fuses between the generator's bus and V1 and V2, so power may be applied to V1-V2 without putting power on the generator.

b. The ROTOTROL should be at rest or all of its brushes raised.

c. Turn the regulator control switch (CA) to AUTO.

d. Apply a-c voltage to V1 and V2 of between 100 and 400 volts at approximately 60 cycles per second.

e. Using a d-c voltmeter check the voltage across NAR-NAL. NAR should be positive on the regulator and F1 should be positive with respect to F2 at the machine.

f. Raise the voltage to 450 volts, turn the voltage adjusting rheostat to extreme LOWER and the d-c polarity should reverse NAL and F2 should now be positive.

2. MANUAL CONTROL UNIT CHECK

The manual control unit can be checked individually according to the following procedure:

a. The regulator control switch (CA) must be turned to AUTO.

b. Apply approximately 50 volts d-c to MP and MN of the manual control unit, making MP positive. If step (a) were not observed the ROTOTROL armature would practically short-circuit this voltage.

c. Turn the handle to extreme LOWER.

d. A d-c voltmeter across MR and ML should indicate a voltage with ML positive.

e. Turn the handle to extreme RAISE.

f. The voltmeter should now indicate a voltage with MR positive.

3. VOLTAGE BUILD-UP

If the machines contain insufficient residual magnetism to build up the voltage, the field must be "flashed" as follows:

a. Turn the regulator control switch (CA) to MAN.

b. Turn the manual control handle one quarter turn from the LOWER stop.

c. Run the generator at minimum speed.

d. Apply 5 to 15 volts d-c between MR and ML of the manual control unit or F1 and F2 of the ROTOTROL. Make MR or F1 positive. Watch the a-c generator voltage. Remove the d-c voltage when the a-c voltage reaches 300 to 400 volts, and control the voltage with the manual control unit.

e. If the system now fails to build up on manual control, switch to automatic control.

f. Should the system voltage still fail to build up and both units have been checked as described above, it indicates trouble in the control field circuit. Check all connections, contacts of switches and ROTOTROL control field.

d. Rectifiers may be shorted. No voltage will appear across shorted legs with power on regulator. Replace rectifier.

e. Check wiring from the regulator through the control switch. See that all connections are tight. Check switch contacts and clean them.

f. Reactor F.R. in POTENTIAL UNIT may be shorted. Measure voltage across C13-V27. If this voltage is not at least half of the generator voltage, the reactor winding is probably shorted, replace reactor.

g. A faulty control field circuit. Check circuit and field. Field F1-F2 should measure between 50 and 60 ohms. See that the field is not reversed.

b) Parallel Machine Operation

Under single-machine operation the generator voltage is the chief symptom of regulator trouble. Under parallel operation, the chief symptom of regulator trouble, is power factor. System voltage will assist in locating the trouble.

HIGH SYSTEM VOLTAGE, POWER FACTORS UNEQUAL

1. The generator with its power factor indicating excessive lag may have a defective regulator. The load power factor generators will be reading lead or close to unity, depending upon the load. Proceed on the faulty regulator as described in "High Voltage" for a single machine.

LOW SYSTEM VOLTAGE, POWER FACTORS UNEQUAL

2. The generator with its power factor indicating lead is probably at fault. The other generators will be indicating at low lagging power factor. Proceed on the faulty regulator as described in "Low Voltage" for a single machine.

2. Remove an outside lead from the terminal block of the front resistor plate with a screwdriver.

3. The resistance between the outside binding posts of this plate should be 200 ohms.

4. The resistance between the center binding post and either outside one should vary between zero and 200 ohms as the handle is turned from one stop to the other. No open-circuit (very high resistance) should be noted at any point of this check.

5. The resistance across the fixed-resistor plate should be between 100 and 200 ohms depending upon the position of the shorting connection.

6. The resistance between the rectifier tap and terminal should not be zero in either direction; i.e., with the ohmmeter leads reversed.

7. Replace lead on front resistor plate.

c) **Voltage Adjusting Unit**
(Fig. VR-12, page 406).

1. Turn regulator control switch (CA) to MAN.

2. The resistance across the resistor (leads V38 and V48 on most schemes, see Master Plan) should vary from zero to 75 ohms, as the handle is turned. Turning the handle toward LOWER should short-out resistance. No open circuits (high resistance points) should be observed on this test.

d) **Potential Unit**
(Fig. VR-9, page 405).

1. Turn the regulator control switch (CA) to MAN.

2. Remove the potential fuses between V1, V2 and the generator bus.

3. Remove the three current-transformer leads C0, C1 and C3 at the terminal block.

4. Megger between terminals V1 or V2 and ground; also between any other convenient terminal on the block and ground. This should be at least .5 megohm.

5. The resistance between V1 and V2 should be 2.05 ohms.

6. The resistance between V18 and V27 should be between a minimum of 6.3 ohms and a maximum of 23.8 ohms. The value depends upon the setting of the resistance.

7. The resistance between V27 and C13 should be 3.2 ohms.

8. The resistance C0 to C1 should be .084 ohm with C23 a center tap.

e) **Automatic Control Unit**
(Fig. VR-6, page 404; and Fig. VR-7, page 404).

1. Turn the regulator control switch (CA) to MAN.

2. Remove wire (-) from resistor tube.

3. Take an ohmmeter around the circuit. A high-inductance coil will show a slowly increasing deflection. No coil in this circuit has so high an inductance that a second or two will not give the correct reading.

Capacitors will show an open-circuit to the ohmmeter but an initial deflection will be noted. Reverse the ohmmeter leads and an even greater deflection will be observed and then it will show a very high resistance. This indicates a good capacitor.

Measured resistance should be within 20 per cent of the value called for.

4. Measure the resistance across the resistor tube, piece 32. It should be 12 ohms.

5. Measure the resistance from NAL to F(+) and F(-). The resistance should be 1.9 ohms This measures piece 24.

6. Measure the resistance across each leg of the rectifiers, piece 34. On each leg reverse the ohmmeter leads. Any rectifier with a shorted leg should be removed.

7. Measure resistance of saturating reactor S, piece 25, across S to V48. The resistance should be approximately 2.2 ohms.

8. Resistance of piece 26, the insulating transformer, is:

a. Secondary is 1.6 ohms, from SS to SF.
b. Primary is 1.1 ohms, from PS to PF.

9. Resistance of reactor, piece 23, is 5 ohms. Measure from PS to F.

10. Resistance of reactor, piece 22 is 1.4 ohms. Measure from PS to F.

11. Check capacitors:

NAVSHIPS 361-1647
SUPPLEMENT A

GOVERNOR MODIFICATION

for

1,500-KW, A-C STEAM-TURBINE DRIVEN GENERATOR SET (U) CVA-63

DEPARTMENT OF THE NAVY
NAVAL SHIP SYSTEMS COMMAND

TECHNICAL MANUAL 1430-C66
SUPPLEMENT A

MAY 1970

CHAPTER 5—SUPPLEMENT A

TABLE OF CONTENTS

NOTE: Chapter and paragraph numbers relate to corresponding chapter/paragraph numbers in basic manual.

Description		Page
Section B -	Description of Turbine and Accessories	501
1-B-17A	Steam Chest and Valves	501
1-B-18A	Turbine Governor	502
1-B-19A	Steam Valve Operator	502
1-B-20A	Flow-Control Valve	503
1-B-21A	Start-Sequence Valve	503
1-B-22A	Accumulator Assembly	503
1-B-23A	Duplex Oil Filter	504
Section C -	Description of Reduction Gear and Accessories	505
1-C-6A	Governor and Oil Pump Drive Assembly	505
1-C-7A	Main Oil Pump	505
1-C-8A	Auxiliary Oil Pump, Manually Operated	506
1-C-9A	Oil Cooler, Strainer and By-pass Valve	506
1-C-10A	Oil System	507
1-C-11A	Lubricating Oil	507
Section H -	Maintenance	509
1-H-11A	Steam Valve Operator and Governor Adjustment	509
1-H-12A	Steam Valve Operator, Disassembly and Reassembly	510

TURBINE-GENERATOR UNIT

SUPPLEMENT A

LIST OF ILLUSTRATIONS

Figure	Title	Tab
T-1A	Outline and Certification Data (5 shts)	1
T-2A	Longitudinal Assembly, Turbine and Gear (4 shts)	2
T-12A	Steam Chest Cover, Valves and Linkage	3
T-13A	Governor Modification Kit Assembly	4
T-14A	Steam Valve Operator and Linkage Assembly (3 shts)	5
T-20A	Oil System and Control Diagram (3 shts)	6
T-37A	Start Sequence Valve	7
T-38A	Accumulator Assembly	8
T-39A	Duplex Filter	9
G-9A	AC Generator, Pole Alteration	10
G-9B	AC Generator, Field Assembly	10

TURBINE-GENERATOR UNIT

500.4
CVA-63 GEN GOV MODS
MAY 1970

SUPPLEMENT A

SECTION B—DESCRIPTION OF TURBINE AND ACCESSORIES

1-B-17A STEAM CHEST AND VALVES

a. Steam flow to the nozzles is controlled and regulated over the range of operating load conditions by four valves located in the steam chest as shown in Figure T-12A, Tab 3. Single seated plug type valves "8" are carried by a flange on the end of stem "9". Each valve seat "7" is countersunk into the steam chest, and secured by expansion ring "27" seal welded all around.

b. Stem "9" is connected to the steam-valve operator by a lever and links and is guided through the steam-chest cover by bushings; the stem is held against rotation by guide pin "26". Valves are numbered one through four and each has a specified drop below the bottom of the lift flange so that for example Valve No. 4 reaches its valve seat before any of the others when the stem is lowered. Lifting the stem unseats the four valves in a sequence predetermined by the setting of nuts "16" on each valve. There is an unbalanced steam force in the chest, tending to close the valves and the valves have enough clearance so that they will seat themselves under steam pressure. An instruction plate is attached to the linkage lever giving the adjustment-nut setting for each valve.

c. The opening in the steam-chest cover through which the valve stem extends to the linkage, is sealed against steam leakage by bushings "23", "18", and "24". Two steam leakoff passages are provided in the bushing area. A high-pressure steam-leakoff is located between lower bushing "24" and bushing "18" and a low-pressure steam-leakoff opens in an annular groove around the upper bushing. Steam from the high-pressure leak-off is led to a zone of lower pressure in the turbine cylinder, and the low-pressure leakoff is led to the gland eductor system.

d. To establish proper valve lifts, use the fixture shown in Figure T-29. It comprises a temporary cover to be bolted on the steam chest instead of the steam-chest cover, an indicator mounting rod, and a rod to be set up on the valve stem.

e. To use the fixture proceed as follows: Disconnect steam-chest linkage and remove steam-chest cover. Install valve setting fixture assembly, as shown in Figure T-29, setting it so that four holes in the cover come over the four valves. Set up rod "4". Drop rod "3" through proper hole in cover plate "2" so that it rests on top of No. 1 valve. Clamp two dial indicators to the rod and set one against top of the valve lifting stem and the other against top of rod "3", compressing them enough to ensure positive response when the stem is lifted.

f. Set both indicator dials at zero. Lift valve stem until a reading shows on each of the indicators. The difference between the two readings will be the clearance of No. 1 valve. Take three or four check readings; the difference should be the same in each instance. Repeat until all valves have been checked.

g. The differences are the clearances between the valve lift and the valve nuts and should be the same as listed in Figure T-12A, Tab 3.

h. The amount the valve stem is raised is immaterial provided it is enough to obtain readings on both indicators and

successive trials show the same difference between stem and valve readings.

1-B-18A TURBINE GOVERNOR

a. A dial-type governor (PGD) detects variations in turbine rotor speed and through hydraulic and mechanical connections to the components of the control system provides accurate and positive control of turbine speed under all load conditions; changes in electrical load are compensated for with practically no change in turbine speed. A manually operated speed adjusting knob, droop attachment, and remotely controlled motor-operated speed changer are provided. Refer to Woodward Bulletins 36614, 36622, and 36014B.

CAUTION

Use only new or purified oil in the governor of the same type used in the turbine.

b. The governor was properly adjusted when installed; it should require no further attention, other than maintenance. If a malfunction develops during operation, refer to enclosed Woodward Service Bulletin 36404A. Adjustments between the governor and steam-valve operator are given in paragraph 1-H-11A.

NOTE

Although the Woodward Bulletin was written for applications using the PGD governor with internal combustion engines, the material presented is directly applicable to turbine operation. Instead of controlling the flow of fuel to an internal combustion engine, the PGD governor controls the flow of steam to the turbine by hydraulically controlling the steam-valve operator which in turn controls the steam-chest valves.

c. See Figure T-20A for schematic illustration of governor and hydraulic piping. The hydraulic system within the governor is shown in the enclosed Woodward Bulletin 36600B.

1-B-19A STEAM-VALVE OPERATOR

a. A steam-valve operator is provided to operate the steam-valve linkage to open or close the steam-chest valves and thereby control steam flow to the turbine under all conditions of load. See Figure T-14A, Tab 5, and Woodward Bulletin 89001A.

b. To meet each new load condition the operator must be repositioned. A change in turbine load causes a change in turbine speed and the change in speed causes the pilot valve plunger in the governor to move from its centered position, resulting in a change in control oil pressure to the valve operator. This pressure is the input signal to the bellows in the operator.

c. As shown in Figure T-14A, pilot valve plunger "57" controls oil flow to and from the area above spring loaded output piston "3"; the linkage assembly is connected to the piston. Pressure in bellows "5" tends to raise plunger "57", and restoring spring "54" acting through the restoring linkage tends to move the plunger down. With the TG set operating under a steady-load condition these opposing forces cancel each other and the plunger remains centered. When the plunger moves above its centered position, high-pressure oil from the supply line forces piston "3" down to increase steam flow to the turbine. When the plunger moves below its centered position, oil in the area above piston "3" flows to drain and load spring "53" forces the piston up to decrease steam flow to the turbine.

d. A flow-control valve regulates the flow of oil to the oil motor located in housing "1". The oil motor rotates plunger "57" to minimize friction.

e. The steam-chest valves can be opened when the turbine is at rest by developing enough oil pressure through the start-sequence valve using the hand oil pump. Refer to paragraph 1-B-21A.

f. Adjustments between governor and steam-valve operator are described in paragraph 1-H-11A.

1-B-20A FLOW-CONTROL VALVE

The flow-control valve is a constant-differential-type valve shown schematically in Figure T-20A, Tab 6. The valve provides a constant downstream pressure, limiting oil flow to the oil motor in the steam-valve operator.

1-B-21A START-SEQUENCE VALVE

a. The start-sequence valve, shown schematically in Figure T-20A, Tab 6, and diagrammatically in Figure T-37A, Tab 7, operates as a slave unit to the governor. The governor will not control the steam-valve operator when first starting the turbine. Consequently, the steam-chest valves must be opened by some other means prior to governor control, and this is the purpose of the start-sequence valve. The valve is hydraulically actuated by operation of the hand-operated oil pump.

The valve hydraulic connections in the 75 psig control-oil line accomplish the following:

1. When first starting the turbine—Directs oil pressure under the plunger in the steam-valve operator, displacing it, to admit oil to the top of the piston in the operator, causing the steam-chest valves to open.

2. When main oil pump and governor begin operating—Allows control oil to flow from the plunger start chamber to the oil reservoir, thereby releasing the plunger to full governor/valve-operator control.

b. Under condition 1 the start-sequence valve directs oil under plunger "57", Figure T-14A, Tab 5, displacing it up to admit supply oil to the top of piston "3" which opens the steam-chest valves. When the main oil pressure is approximately 60 psig, and the turbine is under governor control, the valve relay advances, switching from supply oil under pressure to the plunger, to draining the plunger start chamber. During shutdown, the valve relay returns to the start position when main oil pump pressure decreases to approximately 20 psig.

c. If the manual trip mechanism is operated, the throttle valve will snap shut and not admit steam until reset. If the method of shutdown by closing the throttle valve manually is used, the sequence valve will act on the operator to open the steam-chest valves as in starting the turbine. This will continue turbine operation until steam supply is completely shut off.

NOTE

As in starting, use the hand pump to maintain control pressure as well as pressure to the bearings.

d. Start-sequence valve setting instructions are given in Figure T-37A, Tab 7.

1-B-22A ACCUMULATOR ASSEMBLY

a. An accumulator is installed in the H.P. oil supply line to the steam-valve operator to provide for constant oil pressure to the valve operator during momentary pressure fluctuations caused by load change.

b. The accumulator shown in Figure T-38A, Tab 8, consists of cap diaphragm "14" enclosed in air cylinder assembly "5" secured by retainer "15" and nuts "11". The diaphragm presses against the head of a piston, preloaded by springs "9" and "10". When a sudden load is added to the turbine, oil pressure in the oil supply line to the operator may drop. Should the pressure drop activate the accumulator, the springs will expand against the reduced pressure in the cylinder and, through action of the cylinder head on diaphragm "14", increase oil pressure in the lines until increased turbine speed returns the pressure to normal. A two-way relief port, installed in the wall of the cylinder, bleeds off entrapped air when the springs are compressed and allows air to enter the cylinder as the springs are expanded. A sudden decrease in turbine load will not actuate the accumulator.

NOTE

Before starting any maintenance on the accumulator, read the CAUTION note in Figure T-38.

1-B-23A DUPLEX OIL FILTER

a. The duplex oil filter shown in Figure T-39A, Tab 9, is connected into the H.P. oil supply line. Foreign matter larger than 33 microns is removed from the oil by either of two filter elements "17" contained in filter body "18". The filter assembly consists of head "11" with inlet and outlet oil connections, two bodies "18", a tapered plug "8" with handle "3", springs, relief valves, preformed packings, air vent cocks, drain cocks and a valve lock.

b. The filter provides for continuous filtering while transferring from one filter body to the other and while servicing one of the elements "17". Oil enters body "18" through the inlet flange on head "11", flows down the inside of the body and discharges up through the element to the outlet flange on the filter head. Handle "3" positions tapered plug "8" so that oil is directed to either filter body. Spring loaded valve lock "7" locks the handle in place and should be shifted only for servicing. The handle can be locked between positions 1 and 2 to allow oil flow through both bodies simultaneously. Should an element become clogged with filtered matter, relief valve poppet "13" will open when the pressure differential between the body inlet and discharge reaches 7-10 psi preventing interruption of the oil flow. Each body has a drain cock at the bottom and an air vent cock at the top.

V10068

WOODWARD®

HYDRAULIC AMPLIFIER

PRESSURE CONTROLLED

BULLETIN 89001A

WOODWARD GOVERNOR COMPANY

ENGINE & TURBINE CONTROLS DIVISION

FT. COLLINS, COLORADO, U.S.A.

MAIN OFFICE: **ROCKFORD, ILLINOIS, U.S.A.**

BRANCHES & SUBSIDIARIES:

HOOFDDORP, THE NETHERLANDS • SLOUGH, BUCKS., ENGLAND • TOKYO, JAPAN

© Woodward Governor Company, 1969

HYDRAULIC AMPLIFIER

(PRESSURE CONTROLLED)

DESCRIPTION

HYDRAULIC AMPLIFIER: The Woodward hydraulic amplifier is a linear, pilot-operated servo actuator used where relatively large forces are required to operate power control mechanisms such as steam turbine control valves or the fuel control linkages of large engines. The pressure controlled hydraulic amplifier is used in conjunction with a modified Woodward PG governor. The output of the modified governor is a hydraulic pressure signal which is a function of the load on the prime mover. The hydraulic amplifier serves to amplify the low level signal from the governor to a usable level for actuating the prime mover power control mechanism. The governor, through a bellows and lever arrangement, controls the movement of a pilot valve plunger in the amplifier. The amplifier pilot valve directs high pressure oil (supplied from the prime mover lubricating system or from an external pump) to the open (increase) side of a servo cylinder. The servo cylinder may be of the double-acting type (with differential area piston) or of the single-acting type. Closing (decrease) forces are provided by a return spring or springs in either type cylinder and additionally, in the double-acting cylinder, by oil at supply pressure acting on the close (small area) side of the servo cylinder piston. The double-acting cylinder with differential area piston is normally used in applications where approximately equal forces are required in either direction of movement.

In most applications, the return spring (or springs) is primarily designed to counteract the unbalanced forces tending to open the steam control valve. This provides a balanced system with a linear response over the full stroke of the amplifier. Secondarily, the return spring ensures closing in the event of loss of oil pressure and, in some instances, also ensures that the fuel control or steam valve remains in the closed position during shutdown. In some applications, the return spring may provide only a low force biasing load. Various return spring preloads within a range of 50-1400 pounds may be used depending on the closing forces of the steam valve itself (or other fuel control) and/or the steam valve unbalance forces.

Two models of bellows type pressure controlled hydraulic amplifiers are covered in this bulletin. Both models are basically identical except for the type (double- or single-acting) and diameter of their respective servo cylinders. The large model (7-1/4 inches diameter) is of the double-acting type and is capable of 1800 foot-pounds of work at its maximum stroke of 3 inches at 300 psi oil pressure (maximum) and develops a stalled force of approximately 6500 pounds. The small model (5-1/4 inches diameter) is of the single-acting type and is capable of 1200 foot-pounds of work at its maximum stroke of 2-1/2 inches at 300 psi oil pressure (maximum) and develops a stalled force of approximately 2500 pounds. The work output of either model amplifier is proportional to the oil pressure and length of stroke utilized.

Either model amplifier may be provided with one or more special features to suit the requirements of the particular application in which it is used. In applications which require opening of the steam valve or fuel control preparatory to starting the prime mover and which also have a source of pressurized oil available, a starting oil port is provided in the amplifier case. The port allows starting oil pressure to be used to hydraulically raise the amplifier pilot valve plunger since the governor is inoperative prior to start up of the prime mover. The starting oil supplied to the normal supply port in the amplifier is then directed by the pilot valve to the opening side of the servo cylinder. The degree to which the steam valve or fuel control can be opened is dependent on the starting oil supply pressure, whether the servo cylinder is single- or double-acting, and the return spring preload. In addition to the above, the large model (double-acting) amplifier is also provided with an internal oil transfer passage in which an oil transfer plug, a starting (pressure sensing) valve, or an oil transfer sleeve may be variously used to adapt this model for use in differing applications.

The oil transfer passage plug is used in all 'standard' applications (opening of steam valve or fuel control for starting not required) and also in those applications where opening of the steam valve or fuel control for starting is required and the oil pressure available is at or above the minimum pressures necessary for normal amplifier operation. The minimum operating pressure is largely determined by the preload and rate of the servo piston return spring. The starting valve is substituted for the plug in applications where the oil pressure available for starting (such as from a handpump) is below the minimum required for normal operation but is within the range of 20 - 25 psi.

The oil transfer sleeve is substituted for the plug in applications where a higher opening force is necessary and an equivalent decrease in closing force can be tolerated. The sleeve blocks the flow of oil to the closing side of the servo cylinder and simultaneously vents the area to

drain. Use of the sleeve converts the double-acting servo cylinder to a single-acting cylinder. This increases the effective piston area on the opening side of the cylinder and thus the opening force available from the amplifier. The closing force is reduced to that of the return spring alone. The work capacity of the large amplifier in the opening direction is increased to 3000 foot-pounds with a stalled force of approximately 11,000 pounds.

PG GOVERNOR: The Woodward PG governor used in conjunction with the pressure controlled hydraulic amplifier differs from the conventional PG governor in that a hydraulic pressure signal is provided as an output rather than the normal hydro-mechanical output from the power cylinder. The modified governor also incorporates such conventional features as dial type speed setting, remote speed setting, and speed droop. This bulletin covers only the non-conventional features of the governor. Refer to Bulletins 36600, PG Governor Basic Elements; 36614, Dial Type Speed Setting; and 36014, Speed Adjusting Motor for complete information concerning the governor.

OPERATION

PG GOVERNOR: Refer to figure 1 or figure 2 for a schematic diagram of a modified PG governor connected to a small (single-acting) or to a large (double-acting) hydraulic amplifier. Operation of the basic elements of the PG governor is given in Bulletin 36600, other features are described in Bulletins 36014 and 36614. The governor shown in figures 1 and 2 differs in operation from the conventional PG governor in that no mechanical motion is imparted by the governor to the steam or fuel control by direct linkage. As with the conventional PG governor, at any given speed setting, the pressure in the buffer system is a function of the load on the prime mover. In the conventional governor, the buffer system pressure acting on the power piston causes a movement of the piston proportional to the load on the prime mover which, in turn, is transmitted through linkage to the fuel control. With the modified PG governor, the buffer system pressure serves as the input signal to the bellows in the hydraulic amplifier.

The power cylinder in the modified governor is used as a means of simulating (proportionally) the movement of the servo piston in the hydraulic amplifier and/or as an accumulator to provide sufficient volume in the buffer system for proper displacement of the buffer piston. Movement of the power piston is fed back through a tail rod, lever and plunger arrangement to bias the speeder spring force, at any given speed setting, such that as steam or fuel is increased, the speeder spring force is decreased (speed droop). For any given speed setting the speeder plug remains stationary while the position of the plunger, which is free to move in the plug, is determined by the relative angle of the speed droop lever with the centerline of the plunger. Note that the lever pivot shaft is offset from the centerline of the plunger such that any relative movement of the lever with respect to a given speeder plug setting causes an upward or downward movement of the plunger. An upward movement of the plunger, as the governor moves to increase fuel for an increase in load, decreases the speeder spring force and the governor and prime mover run at a lower speed than called for at that specific speeder plug position. Conversely, a downward movement of the plunger, with a decrease in load, causes an increase in speeder spring force and the governor and prime mover run at a higher speed.

Note: In isochronous applications where speed droop is not required, the tail rod, speed droop lever, and speeder plug plunger are not used. In such case, the power cylinder functions only as an accumulator.

The anticipation needle valve and oscillator piston are features not found in conventional PG governors. The anticipation needle valve restricts the flow of oil into or out of the power cylinder so that the immediate effect of any displacement of the buffer piston in either direction is sensed by the bellows in the hydraulic amplifier as a relatively sharp impulse or 'kick'. This impulse causes a nearly instantaneous response by the amplifier to a correction signal from the governor and thus minimizes lag time and contributes to a stable governing system. The oscillator piston, actuated by a cam on the drivegear shaft, creates low magnitude pulsations in the power cylinder hydraulic circuit which, in turn, cause the power piston to continuously oscillate and thus minimize friction. The pressure of the oil in the power cylinder holds the piston against the cam.

HYDRAULIC AMPLIFIER: As will be noted from figures 1 and 2, the small model amplifier does not have a differential area type servo piston with its attendant oil passages or related accessories. However, basic operation of the small or large model amplifier is identical.

The output of the PG governor is connected to the governor control pressure port in the hydraulic amplifier case. Any increase or decrease in governor control pressure is converted into mechanical motion by the expansion or contraction of the bellows in the hydraulic amplifier. The movement of the bellows is transmitted through a restoring lever and flexible support spring to a pilot valve plunger which controls the flow of oil to and from the amplifier servo cylinder. The movement of the amplifier servo piston is fed back to the bellows by a restoring spring and floating lever arrangement which recenters the pilot valve plunger when the steam valve or fuel control reaches its new position as called for by the governor.

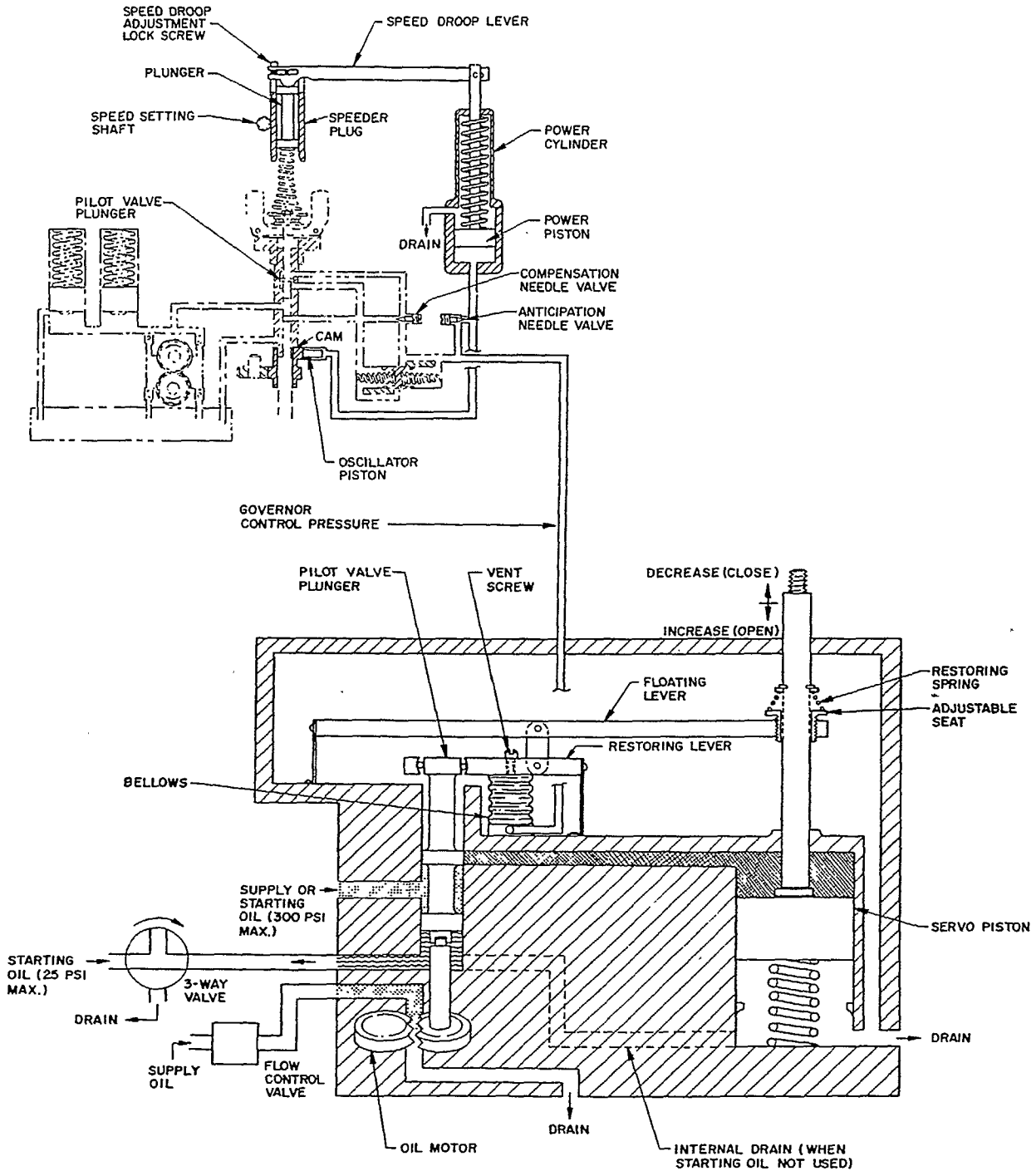

Figure 1. Hydraulic Amplifier (Single-Acting) Schematic Diagram.

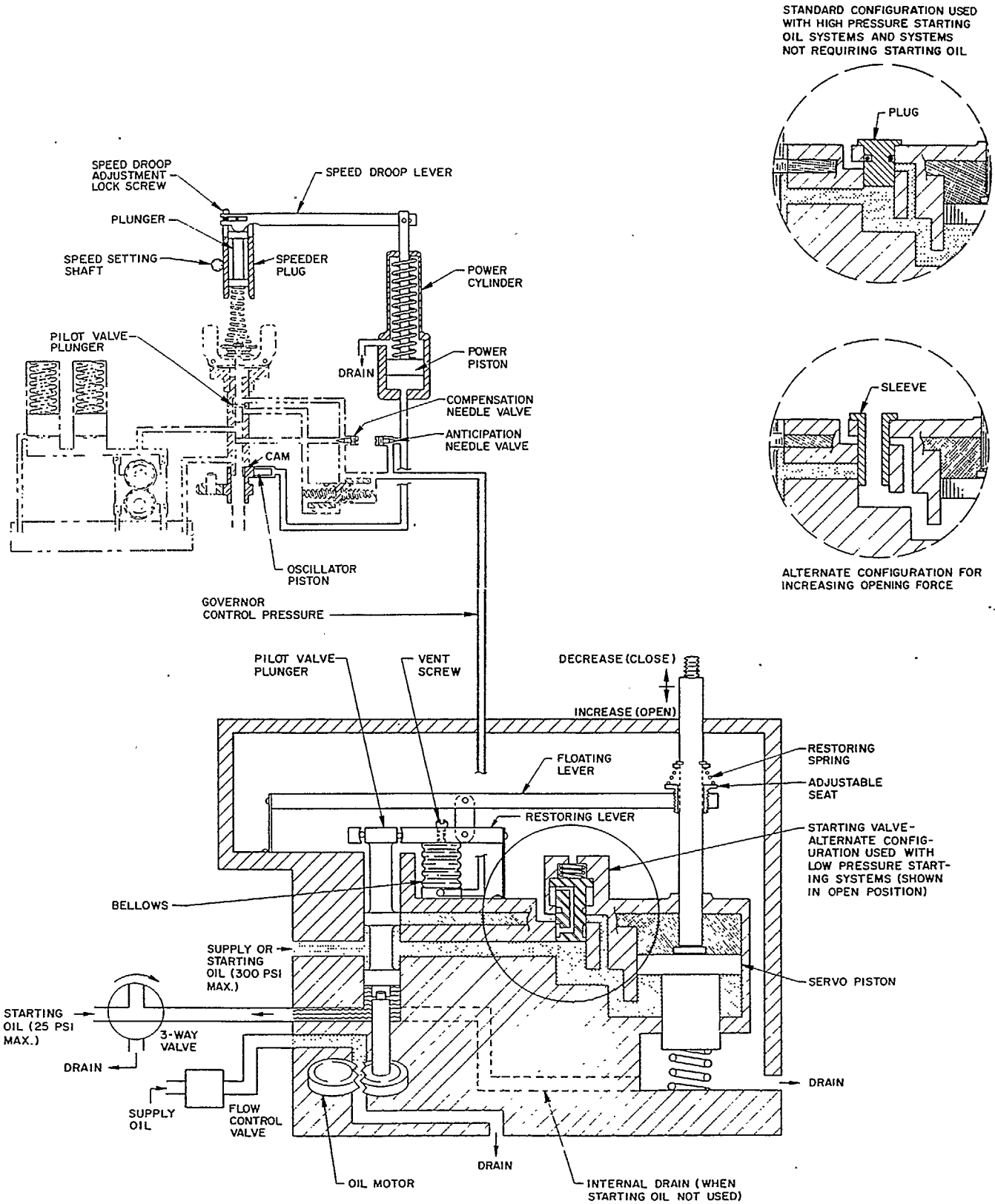

Figure 2. Hydraulic Amplifier (Double-Acting)Schematic Diagram.

Pressurized oil from the external supply source is directed from the amplifier inlet to the pilot valve plunger and also, in large model amplifiers, to the close (decrease) side of the servo piston. Where large model amplifiers are used in applications which utilize low-pressure starting oil, a starting (pressure sensing) valve is used in the oil transfer passage to the closing side of the servo piston. The starting valve has no function during normal operation, being held in the open position by normal oil supply pressures. A functional description of the starting valve will be found at the end of this section.

When the governor senses an underspeed condition and signals for an increase in speed (power), the bellows expands from the increased governor control pressure. This raises one end of the restoring lever which lifts the pilot valve plunger, admitting oil at supply pressure (less the pressure drop occurring across the pilot valve) to the open (increase) side of the servo piston. In the large model amplifier, the oil pressure acting on the open side of the piston is lower than that on the close (decrease) side. However, it acts over a much larger surface area and causes the servo piston to move in the open direction (increase power). As the piston moves, the restoring spring on the piston rod is compressed which forces the free end of the floating lever downward. Since the floating lever is pivoted on the restoring lever, the restoring lever also moves down against the force exerted by the bellows. The downward movement continues until the increase in restoring spring force counterbalances the force change which occurred on the bellows, compressing the bellows until the pilot valve plunger is recentered and thus stopping further movement of the servo piston.

During an onspeed condition, the governor maintains a given control pressure and the pilot valve plunger land is held in the centered position over the control port. With flow to the open side of the servo piston blocked, except to compensate for leakage, the servo piston will maintain its position in relation to the speed (load) setting of the governor.

When the governor senses an overspeed condition and signals for a decrease in speed (power), the bellows contracts with the decrease in governor control pressure. This lowers one end of the restoring lever and pushes the pilot valve plunger downward which allows oil to drain from the open side of the servo piston. The return spring force and, in the large model amplifier, supply oil pressure acting on the close side of the servo piston causes the servo piston to move in the closing direction (decrease power). Movement of the piston continues until the decrease in restoring spring force counterbalances the force change which occurred on the bellows, allowing the bellows to expand until the pilot valve plunger is again recentered.

In those applications which require that the steam valve or fuel control be opened as a prerequisite to starting the prime mover, one of two methods are used depending on the available source of pressurized oil for operating the amplifier. Where starting oil pressures at or above the minimum requirement for normal operation of the amplifier are available (high-pressure-starting-oil systems), the oil transfer plug is used in the amplifier. If the available pressure is less than the minimum requirement (low-pressure-starting-oil systems), the starting valve is used. The oil transfer sleeve can be used with either high- or low-pressure-starting-oil systems. In all applications where starting provisions are required, an additional connection must be made to the starting oil port in the amplifier case. Make the connection using a 3-way valve with one port connected to drain. This allows oil pressure (25 psi maximum) to be used to raise the pilot valve plunger for starting since the governor is inoperative prior to start-up. The restoring spring permits one end of the floating and restoring levers to move upward when oil pressure is applied to the bottom of the plunger. The 3-way valve must be turned to drain after starting, otherwise oil will be trapped under the pilot valve plunger and render the amplifier inoperative.

In high-pressure-starting-oil systems, starting oil need only be supplied to the amplifier supply port after raising the pilot valve plunger. The starting oil is directed to the opening side of the servo piston thus opening the steam valve or fuel control. In low-pressure-starting-oil systems, the starting valve minimizes the forces acting on the closing side of the servo piston. Starting oil pressures within the range of 20-30 psi (typical) cannot generate sufficient force on the opening side of the servo piston to overcome the combined forces of starting oil pressure and spring tension on the closing side of the piston. In shutdown position, the starting valve blocks the flow of starting oil to the closing side of the servo piston and simultaneously opens the area to drain. When the prime mover starts and the normal supply pressure becomes greater than the starting oil pressure, the increasing pressure is sensed through the axial passage in the starting valve plunger. Oil flow into the area under the large diameter of the plunger begins to lift the plunger against the opposing spring force. When the pressure of the supply oil reaches 45-60 psi the plunger snaps to the open position, closing the drain passage and opening the control port which admits supply oil to the closing side of the servo piston. The starting valve remains in the open position during normal operation. At shutdown, spring force returns the plunger to the closed position.

The amplifier pilot valve plunger is continuously rotated by an oil motor to minimize friction between the plunger and the pilot valve sleeve. A flow limiting device (not furnished by Woodward) must be used to restrict oil flow

through the motor as a means of limiting rpm and also to avoid the need for a lubricating oil pump with an unnecessarily high capacity.

INSTALLATION

Refer to figures 5 or 6 and 7 for overall dimensioning and connection data for either the small or large model hydraulic amplifier and the governor. More complete installation data for the governor will be found in the applicable governor bulletin.

The same grade and type of lubricating oil used for the prime mover will generally be satisfactory for use in the hydraulic amplifier. The oil supply to the amplifier may be provided directly from the prime mover lubricating oil system or from an auxiliary pump independent of the prime mover. If a good transient response (piston movement in the order of 30 inches/second) is required, it is essential that the amplifier be provided with an adequate supply of oil. For the 5-1/4 inch amplifier, this rate of movement requires a flow of 330 cubic inches/second (85 gpm or 320 liters/minute). The 7-1/4 inch amplifier requires a flow of 780 cubic inches/second (200 gpm or 760 liters/minute). Accumulators will be required to provide the necessary flow rate if it is impractical to do so directly from a pump.

The hydraulic amplifier should normally be mounted upright. Connecting lines should be as large, short, and straight as possible. Elbows should be avoided. The drain lines should receive equal consideration. If the prime mover mounting pad has integral provisions for drain to sump or reservoir, the sealing cup in the bottom of the amplifier case may be removed to provide direct draining through the mounting pad.

Where the amplifier has porting provisions for starting oil applications, and regardless of whether starting oil is used or not, the starting oil port must be connected to drain for normal operation. The use of a 3-way valve in the starting oil line to the pilot valve plunger is recommended in applications using starting oil. If the starting oil port is plugged or otherwise closed during operation, normal leakage will result in hydraulic locking of the pilot valve plunger and render the amplifier inoperative. The area under the pilot valve plunger is internally drained in amplifiers which do not have external porting provisions for starting oil.

The flow limiting device used in the supply line to the amplifier oil motor should be adjusted for an approximate flow rate of one quart/minute. Normal rotation of the pilot valve plunger is within the range of 100-500 rpm. A clear plastic window is provided in the amplifier cover for observation of the rotation indicator strip attached to the top of the pilot valve plunger.

Adjust the minimum and maximum stroke positions of the fuel or steam control as follows:

1. Provide a supply of oil at normal operating pressure for the amplifier in that particular application and connect to the amplifier supply port. Make a separate connection from the supply to the flow limiting device in the line to the oil motor.

2. Connect a source of oil or air pressure (0-65 psi) to the governor control pressure port in the amplifier case using an adjustable pressure regulating valve.

3. Remove the amplifier cover.

CAUTION

Considerable oil spray occurs over a large area when the amplifier is cycled while under pressure with the cover removed. Drape a clear plastic sheet over the amplifier and tuck the edges under as well as possible so that most or all of the oil spray will be contained. Arrange the sheet so that the stop clamp and adjustable spring seat (67 and 68, figure 3) are accessible if adjustments are necessary.

4. Turn on the oil supply to the amplifier and the oil motor. Make certain the pilot valve plunger is rotating by observing the indicator strip. Set the 3-way valve (if used) to the drain position.

5. Adjust the governor control pressure input as specified for that particular application (see specifications sheet furnished with the amplifier) to obtain the required minimum stroke of the amplifier piston rod. If necessary, adjust the preload on the restoring spring (57) to obtain the required minimum stroke at the specified governor control pressure input. Loosen the set screw and turn the adjustable spring seat (68) CW to decrease the preload and lengthen the stroke; CCW to increase the preload and shorten the stroke.

6. Turn off the oil supply to the amplifier and oil motor and then reduce the governor control pressure input to 0 psi.

7. Make certain the linkage connecting the amplifier to the fuel or steam control operates freely and has minimum backlash. Depress the amplifier piston rod sufficiently to compensate for expansion (usually 1/8 to 1/4 inch) and ensure closing of the fuel or steam control at shutdown when the prime mover is hot. In some cases, differential expansion may require that these dimensions

be increased. Adjust the connecting turnbuckle until the fuel or steam control is in the fully closed position with the rod depressed.

8. Turn on the oil supply to the amplifier and oil motor.

9. Slowly increase the governor control pressure input until the fuel or steam control opens to the required maximum power position for that application. Adjust the position of stop clamp (67) on the piston rod so that it just contacts spring seat (68) with the fuel control or steam valve opened to the maximum power position.

10. Turn off the oil supply to the amplifier and oil motor and reduce the governor control pressure input to 0 psi. Disconnect all special lines and make permanent connections as required.

After completing installation of the governor and amplifier and making all necessary connections, fill the governor with oil (see applicable bulletin). Bleed entrapped air from the governor, control pressure line, and the bellows in the amplifier as follows. In instances where the signal line from the governor to the amplifier is unusually long or has bends or elbows or where the governor is mounted at a lower level than the amplifier, a bleed valve installed in the signal line immediately adjacent to the amplifier will greatly facilitate the bleeding operation. Run a length of clear plastic tubing from the valve back to the governor to avoid excessive loss of oil.

1. Close the anticipation needle valve in the governor and then open 1/2 turn.

2. Set the governor for idle speed and start the prime mover.

3. Open the compensation needle valve in the governor not more then 2 turns. This should cause the prime mover to hunt.

4. Loosen the air vent plug in the governor (see instruction plate on governor case) enough to establish a leak. Allow oil leakage to continue until air bubbles are no longer apparent. Tighten the vent plug and, if necessary, add oil to the governor to the proper level in the sight glass.

5. Open the bleed valve (if used) in the signal pressure line and allow oil to flow until air bubbles are no longer visible in the plastic tube.

6. Remove access plug in top of amplifier cover. Insert a screwdriver through the access port and loosen the vent screw in the top of the bellows enough to establish a leak. It may be necessary to add oil to the governor several times during the bleeding operation depending on the diameter and length of the connecting line between the governor and the amplifier. Tighten the vent screw when air bubbles are no longer apparent in the oil.

7. Repeat steps 4 through 6 above several times to make certain all air has been bled from the system.

8. Gradually close the compensation needle valve until prime mover hunting is minimized or eliminated.

9. Close the anticipation needle valve until prime mover hunting occurs and then open the valve just far enough to eliminate the hunting.

10. After determining the best setting for the anticipation needle valve, open the compensation needle valve as far as possible without causing hunting but not more than 2 turns.

11. Alternately repeat steps 9 and 10 until the compensation needle valve is opened as far as possible and the anticipation needle valve is closed as far as possible. The objectives are to obtain minimum overshoot by the governor following a speed (power) correction and to minimize the time lag between initiation of a correction by the governor and the response by the amplifier. Do not fully close the anticipation needle valve as this will render the speed droop feature of the governor inoperative and also cause very unstable operation of the prime mover.

TROUBLESHOOTING

A troubleshooting chart is provided in this section for use in determining probable causes and corrective actions for troubles which may be encountered in the field. Every possible trouble which may be experienced cannot be anticipated and may, in some instances, be due to faulty operation of other equipment used in conjunction with the amplifier. The effect of the PG governor, oil supply system, and prime mover power control mechanism must be considered when troubleshooting apparent malfunctions of the hydraulic amplifier. Refer to Service Bulletin 36404 for analysis and correction of troubles with the PG governor.

Amplifier troubles such as erratic operation and poor repeatability are usually caused by dirty oil. In many instances, this type of trouble can be corrected by flushing the unit with fuel oil or kerosene. The use of commercial solvents is not recommended as they may damage oil seals or gaskets.

TROUBLE	PROBABLE CAUSE	CORRECTION
Fuel control or steam valve will not open.	Low oil supply pressure.	Check prime mover lubricating oil or other oil supply system for proper operation.
	Fuel control or steam valve sticking.	Disconnect linkage and check operation of fuel control or steam valve. Check steam valve unbalance forces.
	Amplifier bellows ruptured.	Replace bellows assembly.
Erratic or lagging servo response.	Air in governor control pressure line or in amplifier bellows.	Bleed air from line and bellows as instructed in Installation section.
	Fuel control or steam valve sticking.	Disconnect linkage and check operation of fuel control or steam valve. Check steam valve unbalance forces.
	Pilot valve plunger not rotating and sticking – drive coupling spring broken or missing allowing coupling to disengage. Coupling pin sheared. Oil motor excessively worn.	Replace coupling spring or pin. Disassemble oil motor, clean, replace worn parts as required.
	Fluctuating oil supply pressure – pump cavitation.	Check prime mover lubricating oil or other oil supply system for proper operation.
Fuel control or steam valve will not close or closes too slowly	Fuel control or steam valve sticking.	Disconnect linkage and check operation of fuel control or steam valve.
	Starting oil port not connected to drain or internal drain passages clogged.	Make proper connections to drain. Disassemble amplifier and clean drain passages.
	Starting valve plunger sticking in closed position – decrease side of servo piston open to drain.	Disassemble and clean amplifier. Check oil supply for contamination.
	Fatigued or broken servo piston return spring-excessive leakage past servo piston.	Disassembly of amplifier to the extent necessary to replace the return spring or servo piston is not recommended in the field unless absolutely necessary.
Fuel control or steam valve will not open for starting (low-starting-oil-pressure systems).	Fuel control or steam valve sticking.	Disconnect linkage and check operation and force requirements of fuel control or steam valve.

	Starting valve plunger sticking in open position – plunger spring broken or missing.	Disassemble and clean amplifier. Check oil supply for contamination. Replace plunger spring.
	Starting oil pressure too low.	Increase starting oil pressure to a minimum of 20 psi. Do not exceed 25 psi.
Servo piston will not hold position, erratic over- or undershoot, full stroke either direction with minor speed or power correction.	Restoring spring broken or missing.	Replace restoring spring.
Fuel control or steam valve will not fully close at shutdown.	Fuel control or steam valve sticking.	Disconnect linkage and check operation of fuel control or steam valve.
	Incorrect minimum stroke adjustment.	Adjust minimum stroke of amplifier and/or connecting linkage to fuel control or steam valve. Refer to Installation section.
Fuel control or steam valve will not open to maximum power position.	Fuel control or steam valve sticking.	Disconnect linkage and check operation of fuel control or steam valve.
	Incorrect maximum stroke adjustment.	Adjust maximum stroke of amplifier as instructed in Installation section.

ADJUSTMENTS

Refer to the applicable governor bulletins for adjustment of the dial type speed setting feature or the speed adjusting motor. Adjustment of the compensation needle valve and the anticipation needle valve is covered in the Installation section of this bulletin.

Adjustment of the governor speed droop setting is accomplished by loosening clamp screw (206, figure 4) and changing the position of the cam on the speed droop lever (211) with respect to the speed droop lever shaft (207). Moving the cam away from the shaft increases the droop, toward the shaft decreases the droop. If the center of the cam coincides with the center of the shaft, '0' droop results and the governor will provide isochronous (constant speed) operation. Moving the cam beyond the '0' droop point will result in 'negative droop' (speed increase with load increase) with consequent unstable operation.

Adjustment of the minimum and maximum stroke limits of the amplifier are covered in the Installation section.

DISASSEMBLY

HYDRAULIC AMPLIFIER: Refer to figure 3 for disassembly of the hydraulic amplifier. Important points and special precautions to be observed are noted below. Do not disassemble the amplifier to any greater degree than necessary for replacement of worn or damaged parts.

1. When replacing wiper seal (61), pry out old seal using a screwdriver or similar tool. Use care not to nick edges of bore or seating surfaces in seal plate (63).

2. Do not disturb the position of the stop clamp (67) on the piston rod or that of the adjustable spring seat (68) in the floating lever unless necessary.

3. In the 5-1/4 inch model amplifiers, the pilot valve sleeve (104) is retained in its bore by an overlapping edge of the cylinder cover (75). Make certain to observe the following WARNING if removal of the cylinder cover is necessary.

WARNING

Removal of the cylinder cover is not recommended except in unusual circumstances. The servo piston return spring or springs (79 and 80) may be preloaded anywhere within the range of 50 to 1400 pounds depending upon system requirements. An arbor or hydraulic press with a minimum stroke of 7 inches should be used to slightly compress the spring(s) while unbolting the cover and to permit a controlled rate of expansion for removal. Adequate provisions should be made to anchor the amplifier securely and also to prevent the piston rod from slipping off the face of the ram. This operation requires two men, one to operate the press and the second to disassemble the parts. An alternate method of cover removal is to remove two diametrically opposite holddown screws and install two 12-inch all-thread rods for use as jackscrews. Use a 5/16—18 thread for the 5-1/4 inch amplifier, a 1/2—13 thread for the 7-1/4 inch amplifier. Then, using nuts, back off the cover after removing the remaining holddown screws.

4. Do not disassemble the servo piston and piston rod. The piston is ground concentric with the rod after assembly and, if disassembled, cannot be properly reassembled to maintain the required concentricity.

NOTE:Replacement of the oil motor housing (90) or cover (91) in the field is not recommended since these parts are match drilled and dowel pinned at time of assembly. Return the oil motor to the Woodward Governor Company for repair should either of these parts require replacement.

PG GOVERNOR: Refer to the applicable governor bulletins for removal and/or disassembly of the speed adjusting motor (if used), dial type speed setting xfeature, and the basic governor assembly. Refer to figure 4 for disassembly of the speed droop feature.

CLEANING

Clean parts in fuel oil or kerosene. Do not use commerical solvents as they may damage gaskets or oil seals. Do not handle parts roughly or allow highly polished sealing or mating surfaces to contact other objects.

REPAIR

Repair should be generally limited to light burnishing o parts to remove superficial corrosion and other minor scores and scratches in finely finished surfaces. Do not remove sharp edges from lands of plungers or pistons or from oil ports in sleeves or bushings. Use a fine grit crocus cloth or paper and light oil to remove corrosion or other damage. The linkages should move freely without excessive play.

REASSEMBLY

Observe the following general instructions during reassembly.

1. Never reuse cotter or roll pins, replace with new parts.

2. Lubricate 'o' rings (preformed packings) with petrolatum or lubricating oil prior to assembly.

3. When installing 'o' rings over threaded surfaces, tape the threaded area to prevent damage to the 'o' ring.

4. Observe strict rules of cleanliness to prevent the introduction of lint or other foreign material into interior cavities.

5. Lubricate all moving parts and surfaces liberally with oil at assembly.

HYDRAULIC AMPLIFIER: Refer to figure 3 for reassembly of the hydraulic amplifier. Important points and special precautions to be observed are noted below.

1. When reassembling parts of the servo cylinder, refer to WARNING note following step 3 in the disassembly instructions. A hydraulic press is not recommended for reassembly since the operator cannot feel whether or not the piston is entering the cylinder without binding or cocking. Use an arbor press or the jackscrew method for reassembly. Do not force the piston if it begins to bind in the bore. Make certain the pilot valve sleeve is installed in its bore if the sleeve is normally retained by the overlapping edge of the cylinder cover.

2. When replacing wiper seal (61), make certain to install new seal with wiping edge facing outward. Install vee seal (62) with vee facing inward.

3. Make certain that the thickness of laminated shim (99) is sufficient to maintain 0.000—0.002 inch compression on spacer (102) and pilot valve sleeve (104) with mounting plate (94) and stop plate (26) installed.

4. Adjust screw (46) to limit the pilot valve plunger movement in the upward direction to 3/16 to 1/4 inch from its centered position. Do not exceed 1/4 inch travel as damage may occur to the bellows or other linkage components.

5. After completing reassembly of the amplifier, adjust the minimum and maximum stroke as instructed in the Installation section.

PG GOVERNOR: Reassemble the PG governor in accordance with the applicable bulletins and figure 4. Adjust the compensation needle valve, anticipation needle valve, and speed droop after installing the governor on the prime mover. See the Installation and Adjustments sections.

PARTS REPLACEMENT

When ordering replacement parts, it is essential that the following information be given:

1. Hydraulic amplifier and/or PG governor serial number and part number (shown on name plate); needed since a bulletin reference number does not identify the exact part required for any one unit.

2. The number of this (bulletin 89001A) when ordering parts for the hydraulic amplifier and/or the speed droop feature on the PG governor. Refer to the number of the applicable governor bulletin when ordering all other governor parts.

3. Part reference number as given in the parts list, and name or description of part. Where a duplication of parts exists between this bulletin and the governor bulletins, give the reference number listed in this bulletin.

HYDRAULIC AMPLIFIER PARTS LIST

See figure 3 for part reference numbers.

REF NO.	PART NAME	QTY.
89001-1	Pressure input fitting	1
89001-2	Preformed packing, 5/8" o.d.	2
89001-3	Preformed packing, 5/16" o.d.	1
89001-4	Screw, 6–32 x 1/4", button soc. hd., Nylok	2
89001-5	Screw, 8–32 x 3/8", button soc. hd., Nylok	2
89001-6	Plain washer, 3/16 i.d., 3/8 o.d., 1/16" thk.	2
89001-7	Cotter pin, 1/16 x 3/8"	2
89001-8	Straight pin	1
89001-9	Plug	1
89001-10	Set screw, 8–32 x 1/2", Nylok	1
89001-11	Nameplate	1
89001-12	Drive screw, #2 x 3/16"	4
89001-13	Dowel pin	2
89001-14	Screw, 5/16–18 x 1", hex. hd.	4 (5-14")
	Screw, 1/2–13 x 1-1/4", hex. hd.	4 (7-1/4")
89001-15	Lockwasher, internal tooth, 5/16" i.d.	4 (5-1/4")
	Lockwasher, internal tooth, 1/2" i.d.	4 (7-1/4")
89001-16	Plain washer, 5/16" i.d.	4 (5-1/4")
	Plain washer, 1/2" i.d.	4 (7-1/4")
89001-17	Plate, warning	1
89001-18	Plug and bleeder, 1-5/16–12	1
89001-19	Preformed packing, 1-3/8" o.d.	1
89001-20	Screw, 6–32 x 3/8", fil. hd.	8
89001-21	Lockwasher, split, #6	8
89001-22	Spring clamp (Short)	AR
89001-23	Restoring lever	1
89001-24	Floating lever	1

REF. NO.	PART NAME	QTY.
89001-25	Screw, 1/4–28 x 3/4", hex. hd.	2
89001-26	Stop plate	1
89001-27	Pin, spring locating	AR
89001-28	Spring clamp (Long)	2 (7-1/4")
89001-29	Starting valve sleeve	1 (7-1/4")
89001-30	Screw, 1/4–28 x 3/4", soc. hd.	1 (7-1/4")
89001-31	Lockwasher, split, 1/4" i.d.	1 (7-1/4")
89001-32	Clamp	1 (7-1/4")
89001-33	Preformed packing, 1-1/8" o.d.	1
89001-34	Plug, hex. hd., 1-1/16–12	1
89001-35	Starting valve plunger	1 (7-1/4")
89001-36	Starting valve spring	1 (7-1/4")
89001-37	Starting valve plunger stop	1 (7-1/4")
89001-38	Retaining ring, internal, 1.388" o.d.	1 (7-1/4")
89001-39	Preformed packing, 1-1/4" o.d.	1 (7-1/4")
89001-40	Plug (Transfer)	1 (7-1/4")
89001-41	Sleeve (Transfer)	1 (7-1/4")
89001-42	Screw, 1/4–28 x 5-1/2", hex. hd.	8 (5-1/4")
	Screw, 1/4–28 x 5-3/4", hex. hd.	5 (7-1/4")
89001-43	Lockwasher, split, 1/4" i.d.	12
89001-44	Plain washer, 1/4" i.d.	13
89001-45	Decal, cover warning	1
89001-46	Screw, 3/8–24 x 7/8", hex. hd., dog pt.	1
89001-47	Bearing, self-aligning	1
89001-48	Locknut, 5/16–24, fibre	1
89001-49	Gauge (Clear plastic)	1
89001-50	Rotation indicator strip	1
89001-51	Washer, 5/16 i.d., 19/32 o.d., 1/32" thk.	1
89001-52	Thread seal, #6	1
89001-53	Vent screw	1
89001-54	Plug, hex. hd., 5/8–18	1
89001-55	Gasket	1
89001-56	Spring block (Restoring lever)	1
89001-57	Restoring spring	1
89001-58	Spring seat (Upper)	1 (7-1/4")
89001-59	Retaining ring, external, 0.925" i.d.	1
89001-60	Screw, 1/4–20 x 2", hex. hd.	4
89001-61	Wiper seal	1
89001-62	Vee seal	1
89001-63	Seal plate	1
89001-64	Seal plate spacer	1
89001-65	Seal plate gasket	2
89001-66	Screw, 6–32 x 1/2", soc. hd.	1
89001-67	Stop clamp	1
89001-68	Adjustable spring seat (Lower)	1
89001-69	Support spring (Restoring lever)	1
89001-70	Screw, 8–32 x 3/4", fil. hd.	AR
89001-71	Lockwasher, split, #8	AR
89001-72	Screw, 1/4–28 x 1-3/4", hex. hd.	3 (7-1/4")
89001-73	Gasket (Case-to-cover)	1
89001-74	Preformed packing, 5-1/4" o.d. or 7-1/4" o.d.	1
89001-75	Cylinder cover	1
89001-76	Servo piston assembly	1
89001-77	Case	1

REF. NO.	PART NAME	QTY.
89001-78	Sealing cup	1
89001-79	Servo piston return spring (Inner)	AR (7-1/4")
89001-80	Servo piston return spring (Outer)	1
89001-81	Preformed packing, 1/4" o.d.	1
89001-82	Needle bearing	4
89001-83	Drive gear	1
89001-84	Idler gear	1
89001-85	Preformed packing, 1-3/16" o.d.	1
89001-86	Lockwasher, split, 3/8" i.d.	6
89001-87	Screw, 3/8–16 x 1-1/2", soc. hd.	2
89001-88	Screw, 7/16–20 x 1", soc. hd.	2
89001-89	Dowel pin	2
89001-90	Oil motor housing	1
89001-91	Oil motor cover	1
89001-92	Preformed packing, 1/2" o.d.	2
89001-93	Preformed packing, 2.762" o.d.	1
89001-94	Mounting plate	1
89001-95	Preformed packing, 1-1/8" o.d.	1
89001-96	Screw, 3/8–16 x 7/8", soc. hd.	2
89001-97	Drive coupling	1
89001-98	Retaining ring, external, 0.225" i.d.	1
89001-99	Laminated shim	1
89001-100	Plug, hex. hd., 9/16–18	1
89001-101	Coupling spring	1
89001-102	Pilot valve sleeve spacer	1
89001-103	Straight pin	1
89001-104	Pilot valve sleeve	1
89001-105	Pilot valve plunger	1
89001-106	Bellows assembly	1
89001-107	Support spring (Floating lever)	1
89001-108	Stop block	1 (7-1/4")
89001-109	Amplifier cover	1

PG GOVERNOR PARTS LIST

Refer to figure 4 for part reference numbers. This list covers only the speed droop feature, refer to the applicable governor bulletins for remaining parts.

REF NO.	PART NAME	QTY.
89001-201	Drive gear (with oscillator cam)	1
89001-202	Speeder plug	1
89001-203	Speeder plug plunger	1
89001-204	Screw, 1/4—20 x 5/8", hex. hd.	4
89001-205	Lockwasher, split, 1/4" i.d.	4
89001-206	Screw, 8—32 x 5/8", hex. hd.	1
89001-207	Speed droop lever shaft	1
89001-208	Needle bearing	2
89001-209	Pin, 0.263" driv-lok	1
89001-210	Speed droop cover	1
89001-211	Speed droop lever	1
89001-212	Straight pin	1
89001-213	Drive pin, 1/8 o.d. x 0.207" lg.	1
89001-214	Power piston tail rod	1
89001-215	Preformed packing, 11/16" o.d.	1
89001-216	Piston spring	1
89001-217	Spring guard	1
89001-218	Locknut, 3/8—24, fibre	1
89001-219	Screw, 1/4—28 x 3/4", soc. hd.	4
89001-220	Lockwasher, internal tooth, 1/4" i.d.	4
89001-221	Spring guard gasket	1
89001-222	Piston rod lift nut	1
89001-223	Lockwasher, internal tooth, 3/8" i.d.	1
89001-224	Spacer, 0.100" thk.	2
89001-225	Spacer, 0.200" thk.	1
89001-226	Power cylinder	1
89001-227	Power piston	1
89001-228	Oscillator piston	1
89001-229	Retaining ring, square wire, 0.236" i.d.	1
89001-230	Oscillator strut	1
89001-231	Power cylinder gasket	1
89001-232	Connector, straight, 9/16—18 to 3/8" o.d. tube	1
	Plug, 9/16—18 (Alternate if gauge connection not used)	1
89001-233	Preformed packing, 5/8" o.d.	2
89001-234	Elbow, 9/16—18 to 3/8" o.d. tube	1
89001-235	Lockwasher, split, 3/8" i.d.	4
89001-236	Screw, 3/8—16 x 1", soc. hd.	4
89001-237	Preformed packing, 7/16" o.d.	1
89001-238	Needle valve, compensation	1
89001-239	Preformed packing, 5/16" o.d.	1
89001-240	Needle valve, anticipation	1

36600B

WOODWARD
®

PG Governor Basic Elements

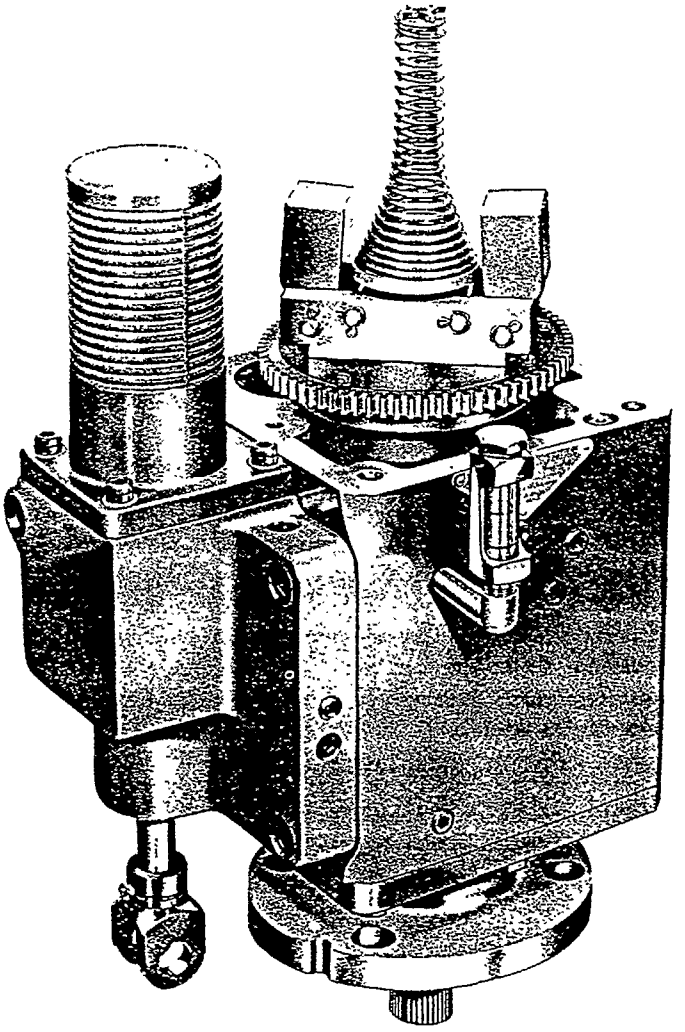

WOODWARD GOVERNOR COMPANY

ENGINE & TURBINE CONTROLS DIVISION

FT. COLLINS, COLORADO, U.S.A.

MAIN OFFICE: **ROCKFORD, ILLINOIS, U.S.A.**

BRANCHES & SUBSIDIARIES:

HOOFDDORP, THE NETHERLANDS • SLOUGH, BUCKS., ENGLAND • TOKYO, JAPAN

36600B

This bulletin is one of several covering various components of the type PG governor, and can be combined with other "sectional" bulletins to describe fully a particular PG governor model.

TABLE OF CONTENTS

PG GOVERNOR BASIC ELEMENTS
- Introduction 1
- Governor Oil Pump 2
- Flyweight Head-Pilot Valve Assembly 2
- Spring-loaded Power Cylinder Assembly 3
- Compensating System 3
- Speed Setting 5

INSTALLATION
- General 6
- Linkage Adjustments 6
- Oil Specifications 6
- Installation Adjustments 6
- Purging Air from Governor and Adjusting Needle Valve 6

MAINTENANCE
- General 7
- Governor Oil 7
- Inspection & Test 7
- Removal of Governor from Engine 8
- Disassembly Procedures 8
- Inspection after Disassembly 10
- Assembly Procedures 10

INFORMATION & PARTS REPLACEMENT
- Parts List ..... 13 & 15
- Exploded View ..... 14 & 15

© Woodward Governor Company 1963, 1964

PG GOVERNOR BASIC ELEMENTS

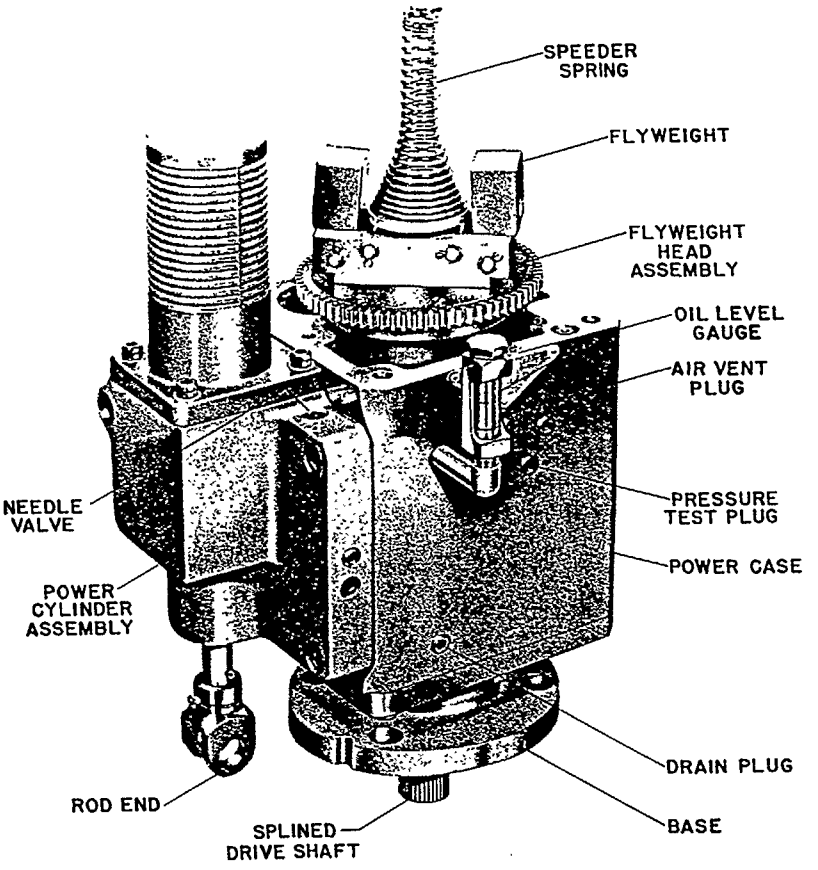

Figure 1

INTRODUCTION: Woodward PG governors control the speed of diesel, gas, and dual fuel engines and steam turbines used in a variety of fields. They find service on engines and turbines driving pumps, compressors, alternators, variable speed D.C. generators, marine propulsion units, and papermaking machines.

In addition to the primary function of controlling engine or turbine speed, the governor is often required to perform such auxiliary functions as limiting engine load, varying engine load to maintain a constant engine power output for a given speed setting, shutting the engine down in the event of lubricating oil pressure failure, etc. Each governor is designed to meet the needs of the engine and the operating requirements of the installation in which it is used.

All PG governors have similar basic elements regardless of how simple or complex the complete control may be. The following elements, found in each PG governor, are sufficient to enable the governor to maintain a constant engine speed as long as the load does not exceed engine capacity:

1. an oil pump, storage area for oil under pressure, and a relief valve by which maximum oil pressure may be limited;
2. a centrifugal flyweight head-pilot valve assembly which controls flow of oil to and from the governor power cylinder assembly;
3. a power cylinder assembly—sometimes referred to as a servomotor—which repositions the fuel racks, fuel valve, or steam valve of the engine or turbine;
4. a compensating system which gives stability to the governed system;
5. a means of adjusting the governor (and thus, engine) speed setting.

Either of two kinds of power cylinder assemblies can be used: a spring-loaded assembly or a differential assembly.

This bulletin describes the operation of the basic elements of a PG governor having a spring-loaded power cylinder assembly. Another bulletin describes the arrangement having a differential power cylinder assembly.

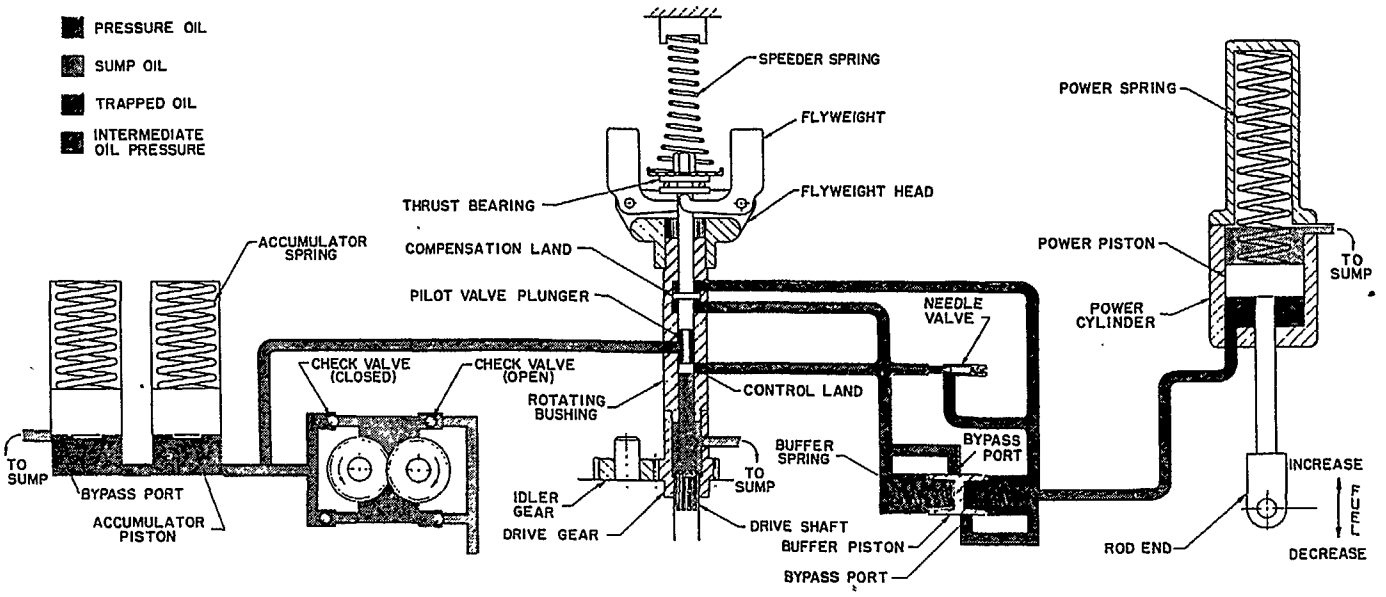

Figure 2

Figure 2 shows the schematic arrangement of these elements in the relative positions they assume when the engine is operating on-speed under steady-state conditions. While differences exist in the actual design details of these elements from one governor to another, the scheme of operation is the same in each.

GOVERNOR OIL PUMP: Each PG governor contains its own oil sump and oil pump. The governor drive shaft, driven at a speed proportional to engine speed by a mechanical connection to the engine, rotates the pump drive gear and the governor pilot valve bushing. As the rotating drive gear turns the idler gear, oil is drawn from the oil sump and is carried in the space between the gear teeth and the walls of the gear pocket to the discharge side of the pump. The oil is forced from the space between the gear teeth as the drive and idler gears mesh.

Assume that all control valves of the governor are closed. Oil deposited on the discharge side of the pump first fills the various oil passages, and then forces the accumulator pistons up against the downward force of the accumulator springs. When the piston uncovers the bypass hole, the excess oil from the governor pump returns to sump. The accumulators thus not only provide a reservoir for pressure oil but also act as a relief valve to limit maximum pressure in the hydraulic circuit.

The arrangement of the four check valves on the suction and discharge sides of the oil pump permits the governor drive shaft to be rotated in either direction without any changes being made in or to the governor. The direction of pump rotation does not affect the oil pressure system or governor operation. Were the pump gears rotated in the directions opposite those shown in figure 1, the open check valves would be closed and the closed check valves opened.

(Some governor models are built without check valves. In these units two plugs replace the two closed check valves so that the governor must be rotated in one direction only.)

FLYWEIGHT HEAD — PILOT VALVE ASSEMBLY: The pilot valve plunger moves up and down in the rotating pilot valve bushing to control the flow of oil to or from the power cylinder assembly. When the pilot valve plunger is centered (i.e., the control land of the plunger exactly covers the control port of the bushing), no oil flows to or from the power cylinder assembly.

The greater of two forces moves the pilot valve plunger up or down. The centrifugal force developed by the rotating flyweights is translated into an upward force which tends to lift the plunger. The centrifugal force is opposed by the downward force of the speeder spring. When the opposing forces are equal, the pilot valve plunger is stationary.

With the pilot valve plunger centered and the engine running on-speed, a change in either of the two forces will move the plunger from its centered position. The plunger will be lowered (1) if the governor speed setting is unchanged but an additional load slows the engine and governor (thereby decreasing the centrifugal force developed by rotating flyweights) or (2) if the engine speed is unchanged but the speeder spring force is increased to raise the governor speed setting. Similarly,

the pilot valve plunger will be raised (1) if the governor speed setting is unchanged but load is removed from the engine causing an increase in engine and governor speed (and hence, an increase in the centrifugal force developed by the rotating flyweights), or (2) if the engine speed is unchanged but the speeder spring force is reduced to lower the governor speed setting.

The thrust bearing atop the ballarm toes permits the pilot valve bushing to rotate while the pilot valve plunger does not rotate. In this way, static friction between the bushing and plunger is minimized.

There are several styles of flyweight head assemblies available. The exact model used in any one governor depends upon the application.

A "solid" head assembly is used in governors on prime movers which afford a smooth drive to the governor.

"Spring driven" and "spring driven, oil damped" head assemblies are used to filter torsional vibrations which may be imparted to the governor by the drive from the engine. (These torsional vibrations may originate from a source other than the drive itself but reach the governor through the drive connection.) Unless minimized or eliminated, the flyweight head will sense these torsional vibrations as speed changes and continually adjust the fuel valve or racks in an attempt to maintain a constant speed.

SPRING - LOADED POWER CYLINDER ASSEMBLY: The governor pilot valve plunger controls the movement of the power piston in the power cylinder assembly. The power piston, acting through the connecting linkage, controls the engine or turbine fuel.

The power spring continually urges the power piston down in the "decrease fuel" direction. However, the power piston will not move down unless the pilot valve plunger is raised above its centered position. Only when the pilot valve plunger is above center can the oil trapped in the circuit between the plunger and power piston escape to sump. If the pilot valve plunger is lowered, pressure oil from the governor pump will be directed to the power piston and will push the piston up—against the force of the power spring—in the direction to increase fuel.

Note that the power piston will move only when the pilot valve plunger is uncentered to permit the oil flow required. With the plunger centered, the power piston is, in effect, hydraulically locked.

The output of the power cylinder assembly is normally a push-pull motion. Appropriate linkage within the power cylinder assembly can change the output to rotary motion. The power piston movement is the same in either case.

It should also be recognized that positioning the power cylinder assembly at an angle other than that shown in figure 1 would have no effect on the assembly operation.

COMPENSATING SYSTEM: Stability of the governed system is achieved by the use of a temporary negative feedback signal which biases the speed signal to the pilot valve plunger. This temporary feedback signal is in the form of a pressure differential applied across the compensating land of the pilot valve plunger. The pressure differential is derived from the "buffer compensating system", and is dissipated as engine speed returns to the normal or set speed.

The buffer piston, buffer springs, and needle valve in the hydraulic circuit between the control land of the pilot valve plunger and the power piston comprise the "buffer compensating system" of the governor. Lowering the pilot valve plunger permits a flow of pressure oil into the buffer cylinder and power cylinder to move the power piston up to increase fuel. Raising the pilot valve plunger permits oil to flow from the buffer cylinder and power cylinder to the governor sump, and the power piston spring moves the power piston down to decrease fuel.

This flow of oil in the buffer system—in either direction—carries the buffer piston in the direction of flow, compressing one of the buffer springs and releasing the other. The buffer piston movement, increasing the loading on one buffer spring while decreasing the loading on the other, creates a slight difference in the oil pressures on the two sides of the buffer piston. The higher oil pressure is on the side of the piston opposite the spring being compressed. The difference in oil pressure is proportional to the buffer piston displacement, and is dependent upon the rate of the buffer springs selected for the particular installation.

The oil pressure on one side of the buffer piston is transmitted to the lower side of the compensation land on the pilot valve plunger; the pressure on the other side of the piston is transmitted to the upper side of the compensation land. The difference in oil pressures produces a net force (often termed a "compensating force")—upward or downward, as the case may be—which assists the flyweights or speeder spring in recentering the pilot valve plunger whenever a fuel correction is made.

Operation of the buffer system can be seen by following the sequence of operations when the engine speed slows down because of the addition of a relatively small load.

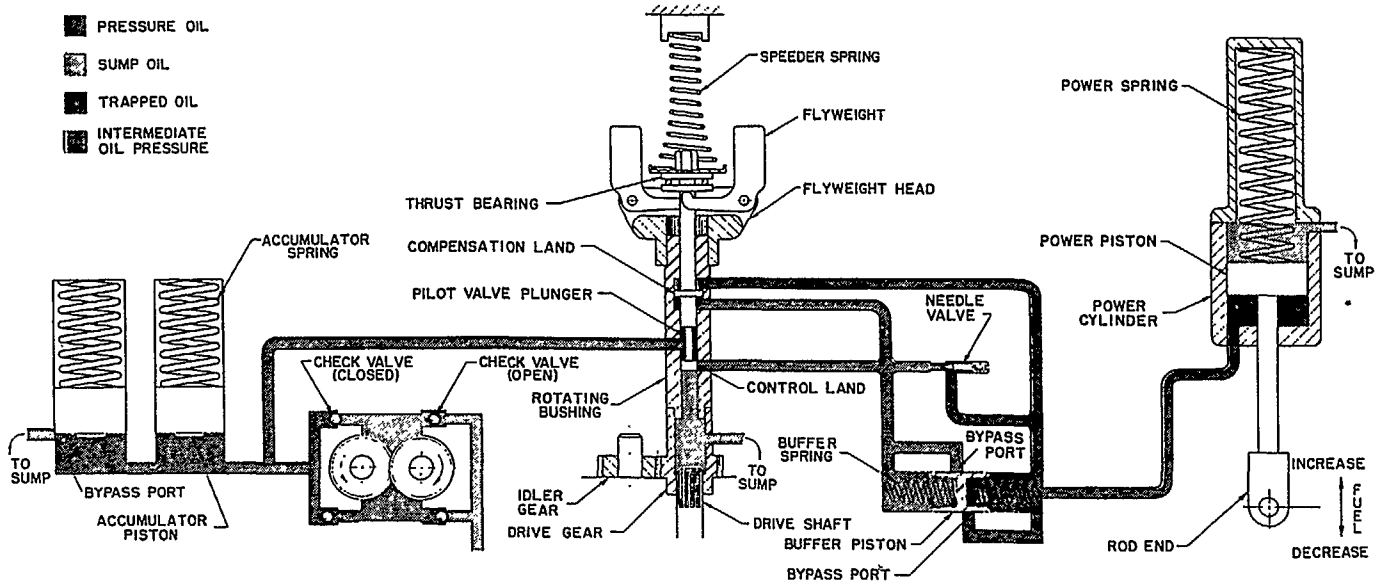

Figure 2

The decrease in centrifugal force developed by the rotating flyweights permits the speeder spring to push the flyweights in, lowering the pilot valve plunger and opening the control port.

As the buffer piston moves in the direction of the oil flow—from pilot valve to power cylinder—the right hand buffer spring is compressed and the left hand spring is relieved. The oil displaced by the buffer piston as it moves to the right forces the power piston up, thereby increasing fuel to the engine, and the engine begins to accelerate. The buffer piston moves to the right, moving the power piston up, until the upward force created by the pressure differential across the buffer piston and compensating land is sufficient, when added to the centrifugal force from the rotating flyweights, to recenter the pilot valve plunger. As soon as the pilot valve plunger is recentered, the power piston movement stops. When the governor is properly adjusted, this new piston position corresponds to the fuel increase needed to operate the engine at a set speed with the new load even though the engine has not yet returned to the set speed.

As the engine continues to accelerate to the set speed, the centrifugal force developed by the rotating flyweights increases. To offset this increase in centrifugal force, it is necessary to reduce the net upward force resulting from the pressure differential across the compensation land as the centrifugal force increases. (Otherwise, the pilot valve plunger would be lifted above center and the power piston would move down to decrease fuel.) This is accomplished by equalizing the pressures on both sides of the compensation land at a rate proportional to the rate at which the engine speed returns to normal. As the pressure differential is decreased, the net compensating force is decreased. If the decrease in compensating force can be made at the same rate as the centrifugal force is increased, the pilot valve plunger will remain centered and the power piston will remain stationary. As the pressure differential is being dissipated, the buffer spring compressed returns the buffer piston to its normal, central position. When the pressure differential has been reduced to zero, the compensating force will be reduced to zero. At this time the engine should be back to its set speed developing the centrifugal force necessary from the flyweights to keep the pilot valve plunger centered.

The rate at which the pressure differential is reduced to zero depends upon the needle valve setting. The needle valve setting allows each governor to be "matched" to the engine on which it is used. The final setting of the needle valve cannot be made until the governor is installed on its engine.

When a relatively small load is removed from the engine while it is running on-speed under steady-state conditions, the sequence of events is similar but in the opposite directions.

The engine speed increases. The rotating flyweights develop additional centrifugal force and lift the pilot valve plunger. The oil between the buffer piston and the pilot valve plunger is connected to sump. The power spring pushes the power piston down, forcing the buffer piston towards the pilot valve plunger. A pressure differential again exists between the oil lines to the upper and lower sides of the compensating land of the pilot valve plunger.

The greater pressure is now on the upper side of the compensating land tending to push the pilot valve plunger back down to its centered position.

When the compensating force becomes sufficient to offset the increase in centrifugal force, the pilot valve plunger is returned to its centered position even though the engine speed is still greater than the set speed. As before, the compensating force is again dissipated at a rate proportional to the rate at which the engine returns to normal speed so that the pilot valve plunger remains centered.

The sequence of movements within the governor occur almost simultaneously rather than in the step-by-step manner described.

Bypass passages are provided in the buffer cylinder to facilitate large corrective movements of the power piston. A large increase or decrease in speed setting, or a large increase or decrease in load on the engine, requires a correspondingly large movement of the power piston to make the necessary fuel correction. At such times, the buffer piston moves far enough to uncover the bypass port (to pressure or drain, depending on the correction being made).

The difference in oil pressures on the opposite sides of the buffer piston and the compensation land cannot exceed the difference which exists when the buffer piston uncovers the bypass port. With the bypass port uncovered, oil flows directly to or from the power cylinder without further increasing the pressure differential existing on the compensation land.

The bypass ports permit the power piston to move quickly in response to large changes in load or speed setting. Since the pressure differential across the compensating land of the pilot valve plunger does not continue to increase, the speed more than returns to normal (or to the new setting). This "over-shoot" in speed is not large, and is tolerated in order to obtain the desired fast response. As soon as the speed changes beyond the desired point, normal governor action reverses the power piston movement, and stable operation is quickly established.

Surrounding the power piston and its piston rod are grooves connected to the intermediate oil pressure between the pilot valve and the buffer piston. These seal grooves — not shown in the schematic — have nothing to do with operation of the governor, but are used to insure that any leakage of pressure oil from the power cylinder to the sump comes from a part of the hydraulic circuit where it will do no harm.

"Remote" power cylinder assemblies (i.e., assemblies which are located away from the governor power case) have three tubes connecting the power cylinder to the power case. These tubes carry (1) oil to and from the buffer, (2) drain oil from the power cylinder, and (3) oil to the power cylinder seal grooves. To eliminate the possibility of trapping air in the oil, the cylinder must be mounted below the governor oil level, and the connecting tubes must slope upward to the governor.

SPEED SETTING ADJUSTMENT: There are a number of speed setting arrangements available for the PG governor. The exact method used depends upon the operating scheme of the installation in which it is used.

It is enough to observe at this point that, no matter how simple or complex the means employed may be, the ultimate objective is to increase or decrease the compression of the speeder spring. An increase in the speeder spring compression requires that the engine run faster in order that the rotating flyweights will develop the additional centrifugal force needed to recenter the pilot valve plunger. Conversely, a decrease in spring compression requires a slower engine speed.

The various speed setting arrangements are described in separate bulletins.

INSTALLATION

GENERAL: At all times, use care in handling the governor; be particularly careful to avoid striking the drive shaft. Do not drop or rest the governor on its drive shaft. Such treatment could damage the governor drive components.

A gasket should be used between the mounting pad and the governor base when the governor is installed on the engine or turbine. The governor should be mounted squarely and the drive connection properly aligned. If the governor is equipped with a serrated or splined drive shaft, it should slip freely into the internal serrations or splines of the drive. If a keyed type governor drive shaft is used, the gear must slip on the shaft freely and should be checked to insure that it meshes properly with its mating gear. The gears should run freely without binding or excessive backlash. Irregularities caused by uneven gear teeth, shaft runout, etc., will result in erratic governing.

LINKAGE ADJUSTMENT: The linkage from the governor to the fuel or steam control must be properly aligned. Any friction or lost motion must be eliminated. Adjustments of fuel linkage must provide for control of fuel from "OFF" to "FULL FUEL" within the limits of the stroke of the governor output connection. For specific information on fuel linkage installation, refer to the engine instruction manual.

When the governor has been properly mounted and the linkage connections completed, make the other connections (pneumatic, electrical, etc.) to the governor.

OIL SPECIFICATIONS: The oil used in the governor should have a minimum tendency to foam, retain air, form sludge, or deposit varnish. It should protect governor parts from corrosion, but not be detrimental to seals or paint. The oil selected should have a high viscosity index; the viscosity should be within the range of 100 to 200 Saybolt Universal Seconds at normal operating temperatures. If the average operating temperature of the governor oil is below 120° F., S.A.E. 10 oil is usually satisfactory; if between 120° F. and 140° F., S.A.E. 20 oil; from 140° F. to 160° F., S.A.E. 30 oil; from 160° F. to 180° F., S.A.E. 40; and above 180° F., S.A.E. 50 oil. If the engine oil meets these requirements, it may be used in the governor as well.

Oil contamination is the major cause of governor troubles. Use only new oil or filtered oil. Containers used for governor oil must be clean, and should be rinsed with a light grade of the same oil before using.

INSTALLATION ADJUSTMENTS: Speed setting and compensating needle valve adjustments are the only external adjustments to be made. The range of speed setting adjustment is set at the factory on new or rebuilt governors and should not need changing. On initial start-up, the speed setting should be at minimum or idle speed.

PURGING AIR FROM GOVERNOR AND ADJUSTING NEEDLE VALVE: When the engine or turbine is started for the first time, or after the governor has been drained and cleaned, the governor must be filled with oil, and any air trapped in the governor removed. To bleed off the trapped air, set the governor at idle speed position. Start the engine or turbine and open the compensating needle valve (figure 3) several turns. This should cause the engine to hunt.

Loosen the air vent plug (figure 3) far enough to establish a leak, and allow the engine to hunt a sufficient length of time to permit all air trapped in the governor oil passages to escape at the vent plug. When no more air bubbles are apparent, tighten the vent plug, and if neces-

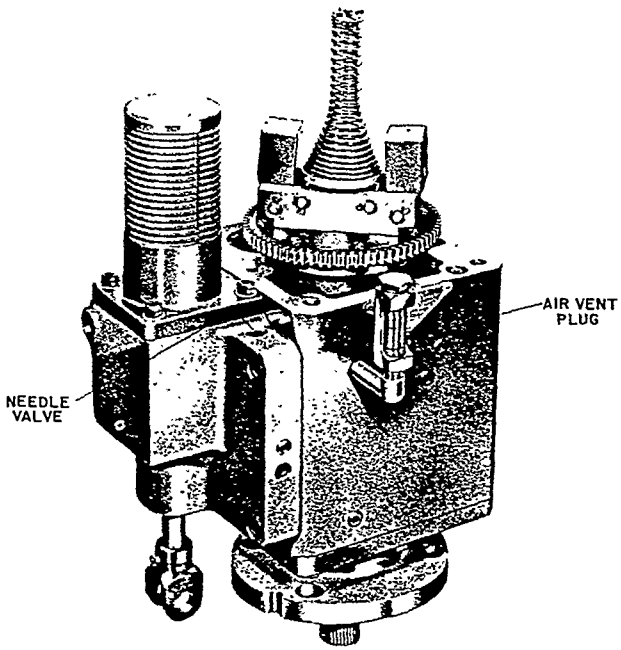

Figure 3

sary add oil to the governor to restore the correct level in the gauge glass.

The compensating needle valve can now be closed gradually until hunting is just eliminated. The proper setting depends upon the characteristics of the prime mover. Keep the needle valve open as far as possible to prevent sluggishness. The needle valve setting will vary from 1/16 turn open to 2 turns open. The needle valve must never be closed tight, as the governor cannot operate satisfactorily when this condition exists.

On some installations, opening the needle valve will not cause the engine or turbine to hunt. In such cases, bleed the air from the governor by disturbing engine or turbine speed to cause the governor to move through full stroke in both directions a sufficient number of times to force out all trapped air. After the needle valve is adjusted correctly for the engine, it should not be necessary to change the setting except for a large permanent temperature change affecting the viscosity of the governor oil.

MAINTENANCE

GENERAL: When requesting information concerning governor operation and maintenance, or when ordering replacement parts, it is essential that the following information be included:

(1) Governor serial number (shown on governor name plate).
(2) Bulletin number to which reference is made.
(3) Bulletin part reference number, name of part, or description of part.

A governor should operate several years before needing replacement if it is kept clean, and if the drive from the turbine or engine is smooth and free from torsional oscillations. Except for isolated cases, so rare they can be almost disregarded, governors do not fail or break down suddenly. Instead, they wear gradually, and give an external indication of their condition in the form of slight hunting, sluggish operation, etc. Further deterioration is at a slow enough rate so an exchange governor may be ordered for installation at the next scheduled shutdown. Because there is so little chance of failure, we do not recommend keeping a complete stock of spare parts on hand. However, plants at which an unplanned shutdown would be very costly often keep a complete spare governor on hand.

It is advisable that the best mechanic available, preferably one experienced with small parts assembly, be permanently assigned to all governor repair work. Cleanliness of tools and work space is essential. A work bench, vise, arbor press, speed lathe, air supply, and containers for cleaning solvents should be provided, if possible. The usual small hand tools are required, and a few special Woodward Governor Company tools may be desirable if sub-assemblies are to be disassembled.

GOVERNOR OIL: Contaminants and foreign matter in the governor oil are the greatest single source or cause of governor troubles. Use only new or filtered oil. Be sure that all containers used for the governor oil are clean. The time interval between governor oil changes depends upon many factors: type of service, operating temperature, quality of oil, etc. Begin an oil maintenance program by inspecting the oil after three months service. If inspection shows the oil to be satisfactory, gradually lengthen the time between inspections. Anytime the governor oil appears to be dirty or breaking down from contaminants or excessive temperatures, drain the governor while it is hot, flush with the lightest grade of the same oil, and refill with fresh oil. In any event, it is recommended that the oil be changed at least once every eighteen months.

INSPECTION AND TEST: Bulletin 36404 lists the most frequent indications of governor malfunctioning, and suggests possible causes and the corrective actions needed. A brief summary of these suggestions follows.

Governor faults are usually revealed in speed variations of the engine, but it does not necessarily follow that all such speed variations indicate governor faults. Therefore, when improper speed variations appear, make these checks:

1. Check the load to be sure that the speed changes observed are not the result of load changes.
2. Check the engine operation to be sure that all cylinders are firing properly, and that the injectors are in good operating condition.
3. See that the operating linkage between the governor and engine is free from binding or lost motion.
4. Check the setting of the compensating needle valve. It is impossible for the governor to function correctly if the needle valve is closed tight.

If neither load nor engine irregularities are found to be the cause of the speed variation and adjustments of the needle valve are unable to correct the malfunctioning, the cause may be either in the governor or the drive to the governor.

If the speed variations are erratic but small in magnitude, the fault may lie in the drive to the governor. Excessive backlash or a tight meshing of the gears driving the governor may be the cause. No amount of adjustment or other work on the governor can correct this condition.

If the speed variations of the governor are large and erratic, and unaffected (except, perhaps in magnitude) by changes of adjustment, or if the governor fails to control at all, it should be repaired or replaced.

As a last resort, to prove whether the engine or governor is at fault, another governor, known to be in good condition, should be installed on the engine. When this is done, the test governor must be of the exact same model as the one being removed.

REMOVAL OF GOVERNOR FROM ENGINE:

In cases of major repairs or a complete governor change, the unit may be removed from the engine as follows:

1. Remove oil drain plug. Drain oil from governor and replace the drain plug. NOTE: Governor may be equipped with drain cock for draining.
2. Disconnect linkage from the governor. If levers are removed from serrated shafts, mark their radial positions on the shafts so that they can be reinstalled in the same positions.
3. Disconnect, at the governor, other connections (electrical, pneumatic, hydraulic, etc.) to the governor.
4. Remove the four stud nuts holding governor assembly to governor mounting pad and lift governor off the studs and away from the engine. Remove the gasket between governor and governor mounting pad.

NOTE: At all times use care in handling and setting the governor down; be particularly careful to avoid striking the end of the drive shaft a sharp blow. Such treatment might damage the governor drive components.

DISASSEMBLY PROCEDURES:

An outline of the order of disassembly of the basic components follows. Hints for the disassembly of subassemblies are given where necessary. (The numbers in parenthesis refer to the parts shown in figure 12.)

1. Remove speeder spring (62).

2. Lift out the flyweight head-pilot valve bushing assembly. (e.g., items 63 thru 101).
   a. After detaching the flyweight head (e.g., item 93), take out snap ring (81) to permit removal of items (82) and (85).

3. Remove snap ring (60) and items (55) thru (59).

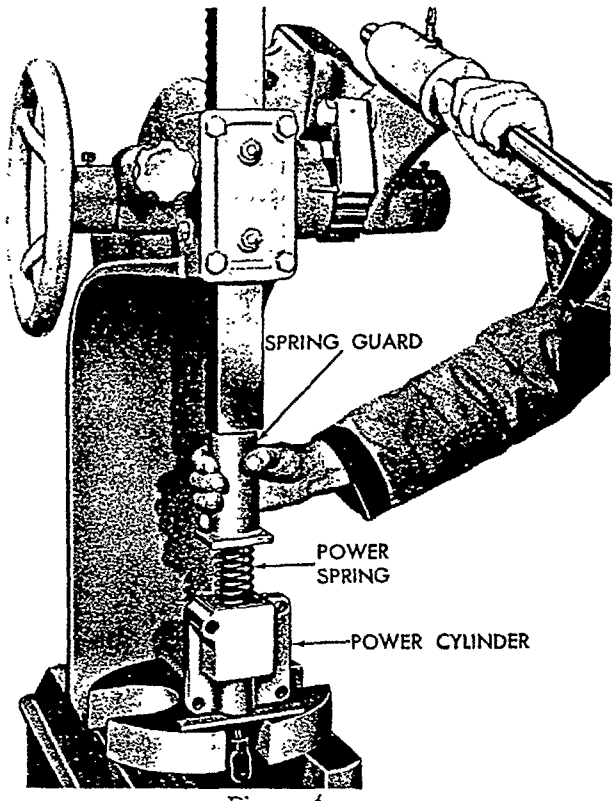

Figure 4

4. Remove four screws (8) and lockwashers (9) to detach the power cylinder assembly (items (5) thru (22).
   a. To remove spring guard (20) position the power cylinder assembly in an arbor press as shown in figure 4. Use the arbor press to hold the spring guard down against the force of power spring (17) while removing screws (22) and washers (21).

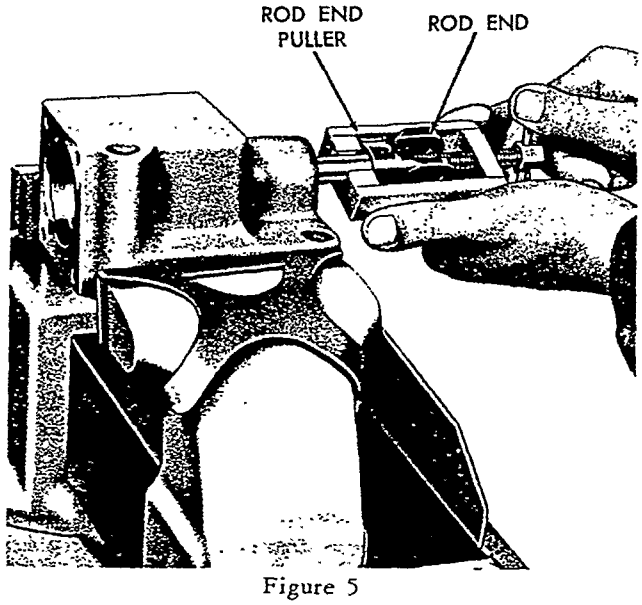

Figure 5

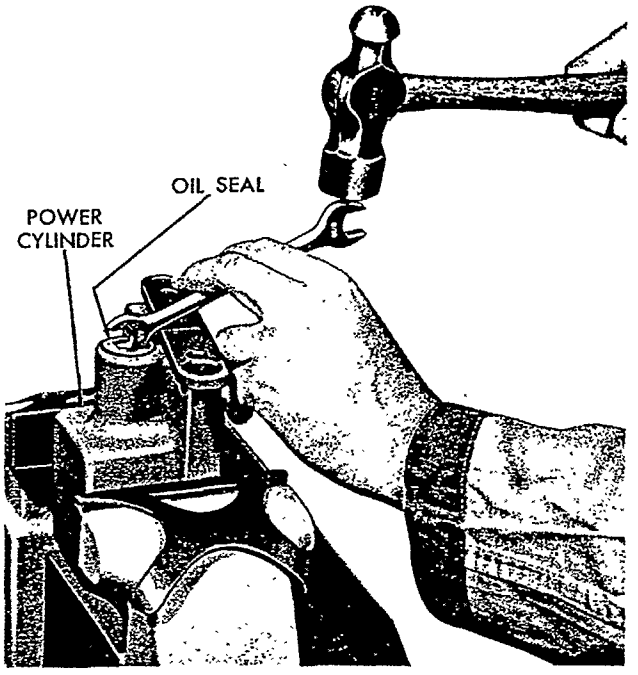

Figure 6

b. Use a rod end puller tool (Woodward tool 012281) to remove fuel rod end (5). See figure 5 for use of puller.
c. Grip power cylinder (10) in a vise to remove oil seals as shown in figure 6.

5. Remove screws (53) and retainer (52). Take out drive shaft (51) and items (46) thru (50). Remove drive shaft oil seal (47) as shown in figure 7.

6. Remove screws (45) and washers(44). Lift off base (43) taking care that idler gear (40) and drive gear (38) do not fall out. Remove the idler gear and drive gear.

7. Set the power case (28), bottom end (i.e., end with idler stud 39) down, in an arbor press or small drill press. With a rod against spring seat (24), compress accumulator springs (25) and (26) to permit removal of upper snap ring (23). See figure 8. Remove spring seat (24) and springs (25) and (26).

Invert the power case and remove snap rings (23) and accumulator pistons (37).

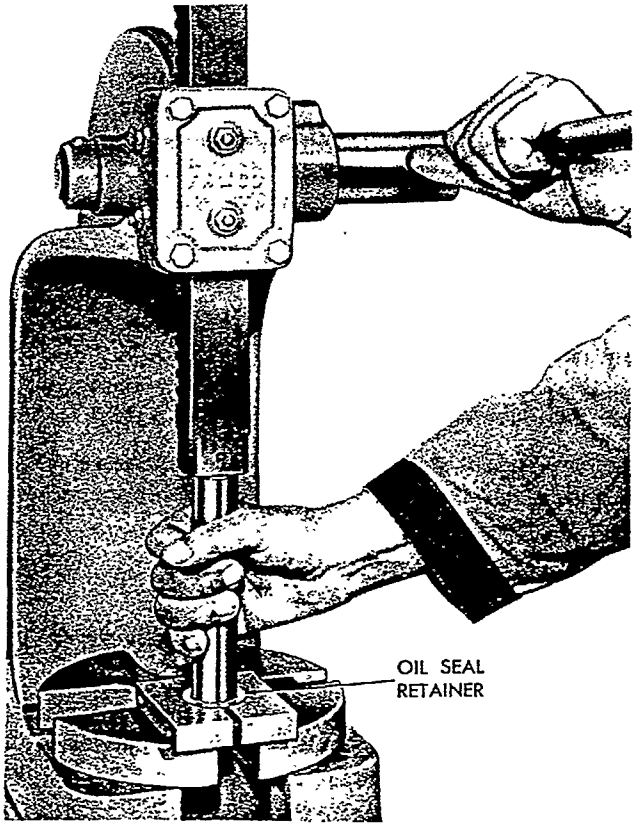

Figure 7

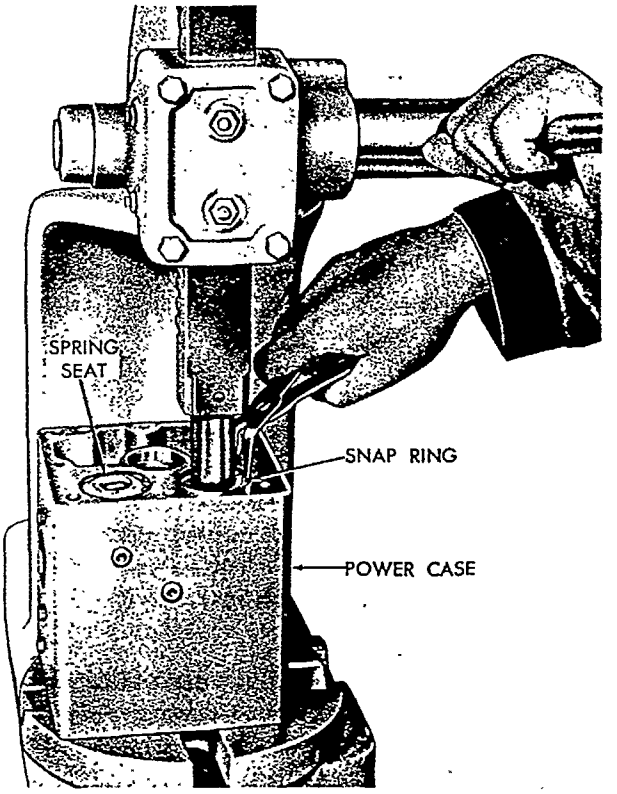

Figure 8

8. If necessary to remove check valve assemblies (29 and 30), proceed in this manner:
   a. To remove inner check valves (29), pry the retainer plate from the check valve assembly and remove springs and check balls.
   b. To remove outer check valves (30), press the check valves through and out of the valve case.
   c. Then tap all four check valve cases with 1/4"-28 tap. Using a 1/4"-28 bolt with a small plate as a jack, pull the four valve cases. See figure 9.
   d. Remove two balls from the lower case.

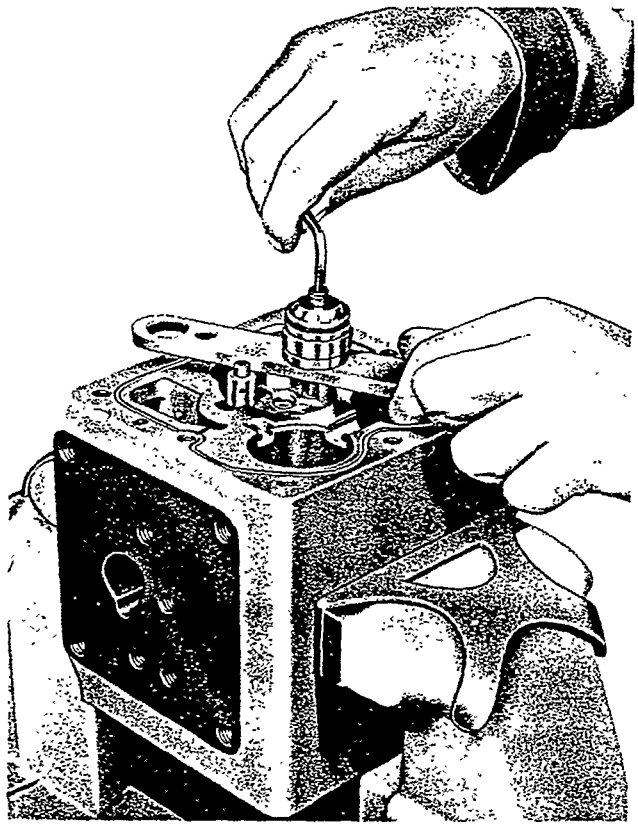

Figure 9

INSPECTION AFTER DISASSEMBLY: After disassembling the governor, wash all parts in clean fuel oil and carefully inspect for wear. Generally, most of the repair work consists of cleaning and polishing the governor parts. All pistons, plungers, valves, and rods should move freely without bind or catching. Do not lap in parts if possible to free up by other means.

Inspect the check valves (if used) in bottom of governor power case. They must be clean, operating freely and seating properly.

The flat, joint surfaces at top and bottom of both governor case and base, must be free of burrs and high spots. Carefully avoid scratching or scoring these faces, particularly the top of the base and the bottom of the case. Avoid damage to the neoprene seal ring and the groove in the bottom face of the governor power case.

The pilot valve plunger should move freely in the pilot valve bushing assembly. If the plunger surfaces are scratched they may be dressed with a hard Arkansas stone.

CAUTION: The edges of the control land and compensating piston MUST be left sharp.

The power piston assembly should move freely in the power cylinder, and the buffer piston should move freely in the buffer cylinder.

Ballhead flyweights must work freely on the needle bearings and pivot pins.

If the toes of the flyweights have flat spots, it will be necessary to disassemble the ballhead, and round off the worn spots with emery cloth. If wear is excessive, install new flyweights.

Ball races and bearing balls of the flyweight thrust bearing should be in perfect condition.

ASSEMBLY PROCEDURES: While assembling the parts into the governor, care must be taken to insure that no lint or other foreign matter is present on the parts. The governor may be assembled dry, or if preferred a small amount of clean lubricating oil can be applied to the parts as they are placed into the governor. Replace all pipe plugs removed from the governor, using a good joint compound on the threads of the plug — NOT IN THE HOLE. When the governor is assembled, apply a liberal amount of clean lubricating oil over all the moving parts, to insure initial lubrication.

The order of assembly is, in general, the reverse of the disassembly process. The following hints should aid in assembly of the basic elements. (The numbers shown in parenthesis refer to the parts shown in figure 12.)

1. Use Woodward tool 360689 to press check valve assembly (29) into power case (28). Use Woodward tool 360690 to press in check valve assembly (30).

2. After installing lower snap rings (23), accumulator pistons (37) and springs (25) and (26) use a rod and an arbor press to compress spring seats (24); install upper snap rings (23).

3. With the power case components installed and the power case resting upside-down (i.e., with idler gear stud 39 up), install idler gear (40), drive gear (38) and oil seal ring (41). Be sure the gears turn freely.

Attach base (43) to power case with screws (45). Do

not tighten screws. Insert drive shaft (51) with bearing (50) and snap ring (49) already on drive shaft into base and turn until splined end slips into splines in pump drive gear. Continue turning to check alignment and free rotation of the drive gear and idler gear while tightening screws (45).

Withdraw the drive shaft from the base.

4. Press oil seal (47) into oil seal retainer (48) flush with the end opposite the flange end of retainer.

5. Install gasket (46) and the assembly consisting of the oil seal and oil seal retainer. Install the drive shaft assembly. Attach retainer (52) with screws (53). Tighten screws evenly. Do not attempt to bring retainer into contact with base.

6. Press oil seals (6) and (7) into power cylinder (10). Seal (7) should be inserted with the part number facing out. Seal (6) should be inserted with the part number facing in and pressed in to .005" below flush.

7. Place oil seal inserter (Woodward tool 360066) on over rod of power piston assembly (16) to avoid damaging oil seals (6) and (7) when inserting the piston assembly in the power cylinder.

8. Position power cylinder in an arbor press, align taper pin holes, and press rod end (5) onto end of power piston (16). See figure 10 Place a small steel block in the rod end slot so that pressure is applied against the bottom of the slot.

9. When mounting the power cylinder assembly onto the power case, align the holes in gasket (13) with the holes in the power case (28) instead of with those in the power cylinder.

10. When assembling the flyweight head pilot valve bushing assembly, align the missing tooth in the pilot valve bushing with the corresponding missing tooth in its mating part (e.g., items 76 and 87).

11. The three-piece thrust bearing (66) fits onto the stem of the pilot valve plunger (85) with bearing race with the larger hole on the bottom (i.e., against the flyweight toes).

12. "Center" the pilot valve plunger in this manner: with slight pressure on the speeder spring seat (65), adjust the pilot valve plunger nut (63) until, as the flyweights (70) are moved from their extreme inward to their extreme outward position, there is the same amount of control land showing in the control port at each extreme.

The control ports are the bottom row of holes in the pilot valve bushing assembly. See figure 11. (Note: Shutdown rod (72) and retaining ring (73), if used, must be inserted through nut (63) before centering adjustment is made).

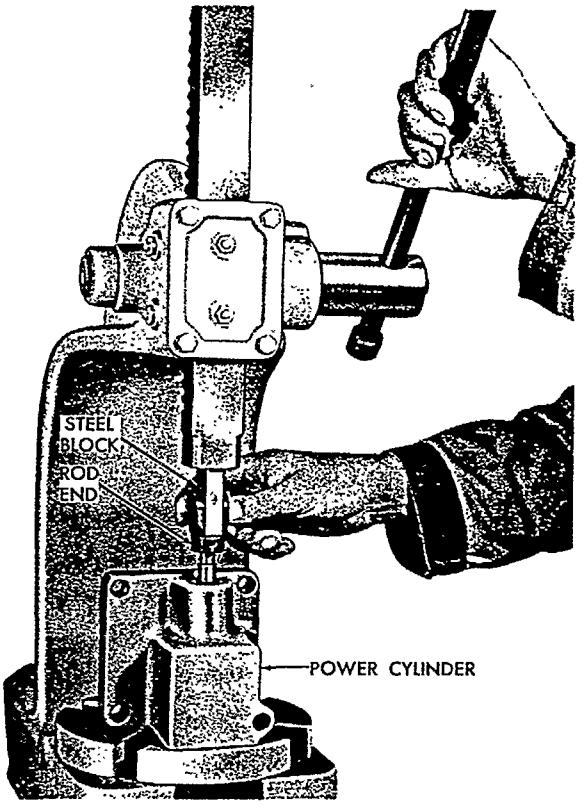

Figure 10

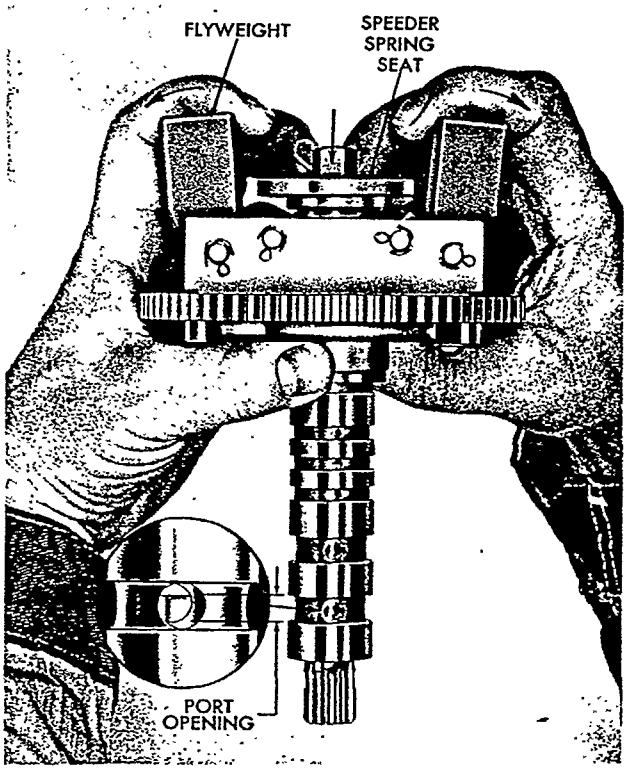

Figure 11

INFORMATION AND PARTS REPLACEMENT: When requesting additional information concerning governor operation, or when ordering repair parts, it is very essential that the following information accompany the request.

1. Governor serial number (shown on nameplate); needed since the bulletin reference numbers do not identify the exact part number required for any one governor.
2. Bulletin number.
3. Part reference number, name of part, or description of part.

REF. NO.	PART NAME	NO. REQ'D.
36600-1	Rod End Pin	1
36600-2	Cotter Pin	1
36600-3	Taper Pin	1
36600-4	Rod End Pin Washer	1
36600-5	Rod End	1
36600-6	Oil Seal	1
36600-7	Oil Seal	1
36600-8	Socket Head Screw (3/8"-16 x 1 1/4")	4
36600-9	Split Lockwasher (3/8")	4
36600-10	Power Cylinder	1
36600-11	Pipe Plug (1/8")	As Required
36600-12	Pipe Plug (1/16")	As Required
36600-13	Gasket	1
36600-14	"O" Ring	1
36600-15	Needle Valve	1
36600-16	Power Piston and Rod Assembly	1
36600-17	Power Cylinder Spring	1
36600-18	Gasket	1
36600-19	Piston Stop Ring	1
36600-20	Spring Guard	1
36600-21	Shakeproof Washer (1/4")	4
36600-22	Socket Head Screw (1/4"-28 x 3/4")	4
36600-23	Snap Ring	4
36600-24	Spring Seat	2
36600-25	Accumulator Spring (Large)	2
36600-26	Accumulator Spring (Small)	2
36600-27	Case-to-Column Dowel Pin	2
36600-28	Power Case	1
36600-29	Check Valve Assembly (Spring Loaded)	2
36600-30	Check Valve Assembly (Plain)	2
36600-31	Gasket	1
36600-32	Instruction Plate	1
36600-33	Drive Screw	3
36600-34	Oil Level Gauge	1
36600-35	Elbow	1
36600-36	Drain Cock	1
36600-37	Accumulator Piston	2
36600-38	Drive Gear	1
36600-39	Idler Gear Stud	1
36600-40	Idler Gear	1
36600-41	Oil Seal Ring	1
36600-42	Case-to-Base Dowel Pin	2
36600-43	Base	1
36600-44	Split Lockwasher (21/64")	8
36600-45	Hex Head Screw (5/16"-18 x 1")	8
36600-46	Gasket	1
36600-47	Oil Seal	1
36600-48	Oil Seal Retainer	1
36600-49	Snap Ring	1
36600-50	Bearing	1
36600-51	Drive Shaft	1
36600-52	Bearing Retainer	1
36600-53	Hex Head Screw (1/4"-28 x 5/8")	3
36600-54	Lockwire	As Required
36600-55	Spring Seat	1
36600-56	Buffer Spring	2
36600-57	Buffer Piston	1
36600-58	Plug	1
36600-59	"O" Ring	1
36600-60	Snap Ring	1
36600-61	Speeder Spring Check Plug	1
36600-62	Speeder Spring	1
36600-63	Pilot Valve Plunger Nut	1
36600-64	Cotter Pin	1
36600-65	Speeder Spring Seat	1
36600-66	Thrust Bearing	1
36600-67	Adusting Spring Washer	1
30066-68	Adjusting Spring	1
36600-69	Flyweight Bearing	4
30066-70	Flyweight	2
36600-71	Shutdown Nut	2
36600-72	Shutdown Rod	1
36600-73	Retaining Ring	1
	SPRING COUPLED — UNDAMPED FLYWEIGHT HEAD ASSEMBLY	
36600-74	Round Head Screw (#6-32 x 5/16")	1
36600-75	Split Lockwasher (#6)	1
36600-76	Spring Coupling Assembly	1
36600-77	Splined Nut (#10-32)	1
36600-78	Flyweight Head	1
36600-79	Special Washer	1
36600-80	Round Head Screw (#10-32 x 3/4")	1
36600-81	Snap Ring	1
36600-82	Compensating Bushing	1
36600-83	Cotter Pin	8
36600-84	Flyweight Pin—Limit Pin	4
36600-85	Pilot Valve Plunger	1
36600-86	Centering Bearing	1
36600-87	Flyweight Head Gear-Pilot Valve Bushing Assembly	1
	SPRING COUPLED — OIL DAMPED FLYWEIGHT HEAD ASSEMBLIES	
36600-88	Round Head Screw (#8-32 x 5/16")	1
36600-89	Split Lockwasher (#8)	1
36600-90	Spring Coupling Assembly	1
36600-91	Fillister Head Screw (#5-40 x 9/32")	1
36600-92	Lockwasher (#5)	1
36600-93	Flyweight Head	1
36600-94	Centering Bearing	1
36600-95	Oil Seal Ring	1
36600-96	Flyweight Head Gear-Pilot Valve Bushing Assembly	1
36600-97	Flyweight Head Cup-Pilot Valve Bushing Assembly	1
	PARTS FOR SPECIAL LOW SPEED GOVERNOR OPERATION	
36600-98	Spring	1
36600-99	Spring Seat	1
36600-100	Plug	1
36600-101	Snap Ring	1
	RUBBER DAMPED FLYWEIGHT HEAD ASSEMBLY	
36600-102	Rubber Coupling Assembly	1
36600-103	Flyweight Head	1
36600-104	Flyweight Head Cup-Pilot Valve Bushing Assembly	1
	SOLID FLYWEIGHT HEAD ASSEMBLY	
36600-105	Flyweight Head	1
36600-106	Pilot Valve Bushing Assembly	1

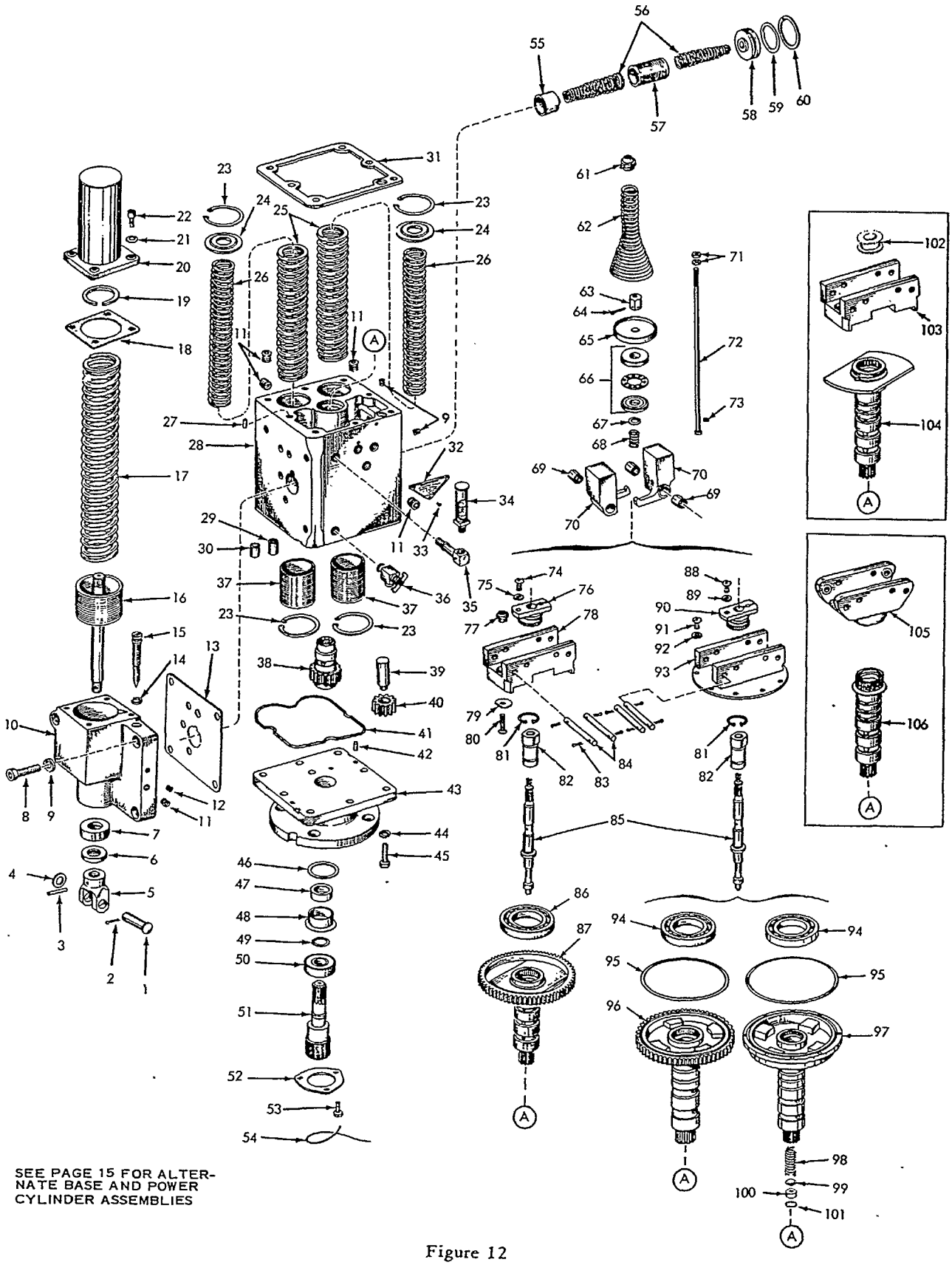
SEE PAGE 15 FOR ALTERNATE BASE AND POWER CYLINDER ASSEMBLIES

Figure 12

REF. NO.	PART NAME	NO. REQ'D.
POWER CYLINDER ASSEMBLY WITH ROTARY TERMINAL SHAFT		
36600-107	Power Piston and Rod Assembly	1
36600-108	Drive Screw	2
36600-109	Terminal Shaft Scale	1
36600-110	Rack Dial Segment	1
36600-111	Taper Pin	1
36600-112	Socket Head Screw (#10-32 x 5/8")	1
36600-113	Split Lockwasher (#10)	1
36600-114	Oil Seal (Small)	1
36600-115	Needle Bearing (Small)	1
36600-116	Socket Head Screw (#8-32 x 3/8	2
36600-117	Split Lockwasher (#8)	2
36600-118	Compensating Needle Valve	1
36600-119	"O" Ring	1
36600-120	Split Lockwasher (#3/8")	4
36600-121	Socket Head Screw (3/8"-16 x 1")	1
36600-122	Rack Scale Pointer	1
36600-123	Snap Ring (Large)	2
36600-124	Snap Ring (Small)	2
36600-125	Power Piston Link	2
36600-126	Stop Nut (7/16"-20)	1
36600-127	Power Lever	1
36600-128	Split Lockwasher (5/16")	2
36600-129	Clamp Screw	2
36600-130	Gasket	1
36600-131	Cover	1
36600-132	Split Lockwasher	8
36600-133	Socket Head Screw (1/4"-28 x 3/4")	8
36600-134	Pipe Plug (1/8" NPT)	1
36600-135	Gasket	1
36600-136	Power Cylinder	1
36600-137	Needle Bearing (Large)	1
36600-138	Oil Seal (Large)	1
36600-139	Terminal Shaft	1
36600-140	Piston Rod Pin	1
36600-141	Power Lever Pin	1
36600-142	Snap Ring (Small)	2
ALTERNATE BASE ASSEMBLY		
36600-143	Base	1
36600-144	Gasket	1
36600-145	Oil Seal	1
36600-146	Oil Seal Retainer	1
36600-147	Serrated Drive Shaft (Long)	1
36600-148	Bearing	1
36600-149	Snap Ring	1
36600-150	Bearing Retainer	1
36600-151	Hex. Head Screw (1/4"-28 x 5/8")	3
36600-152	Keyed Drive Shaft	1
36600-153	Straight Key	1
36600-154	Spacer Sleeve	1
36600-155	Castle Nut (5/8"-18)	1
36600-156	Lockwire	As Required

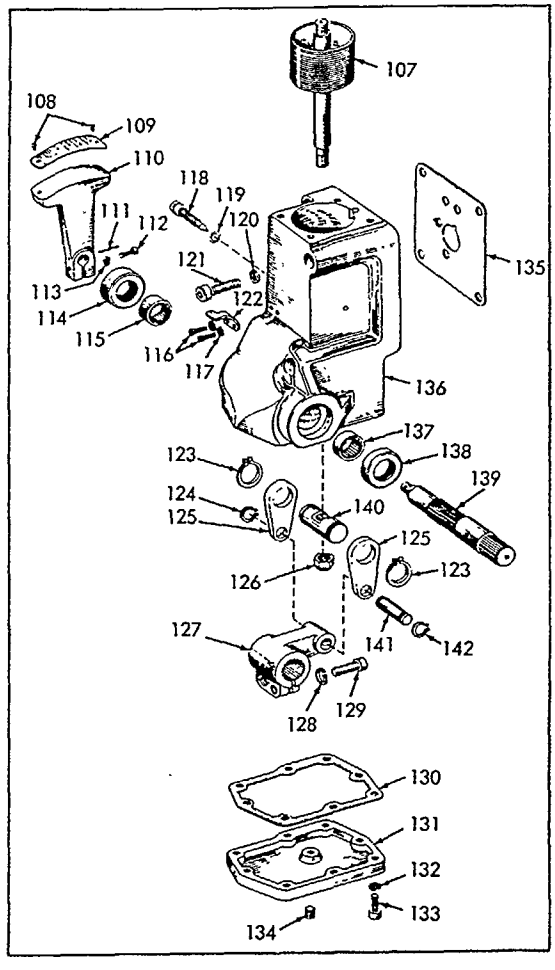

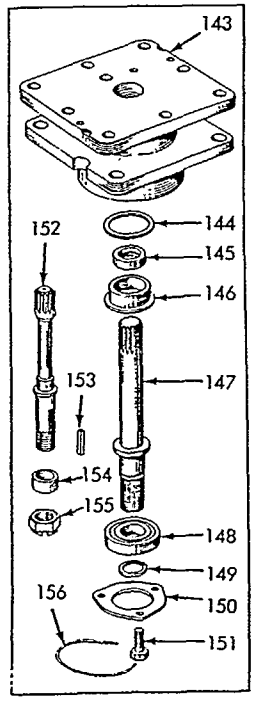

Figure 13

WOODWARD®

BULLETIN 36622

SPEED DROOP MECHANISM FOR PG DIAL GOVERNOR

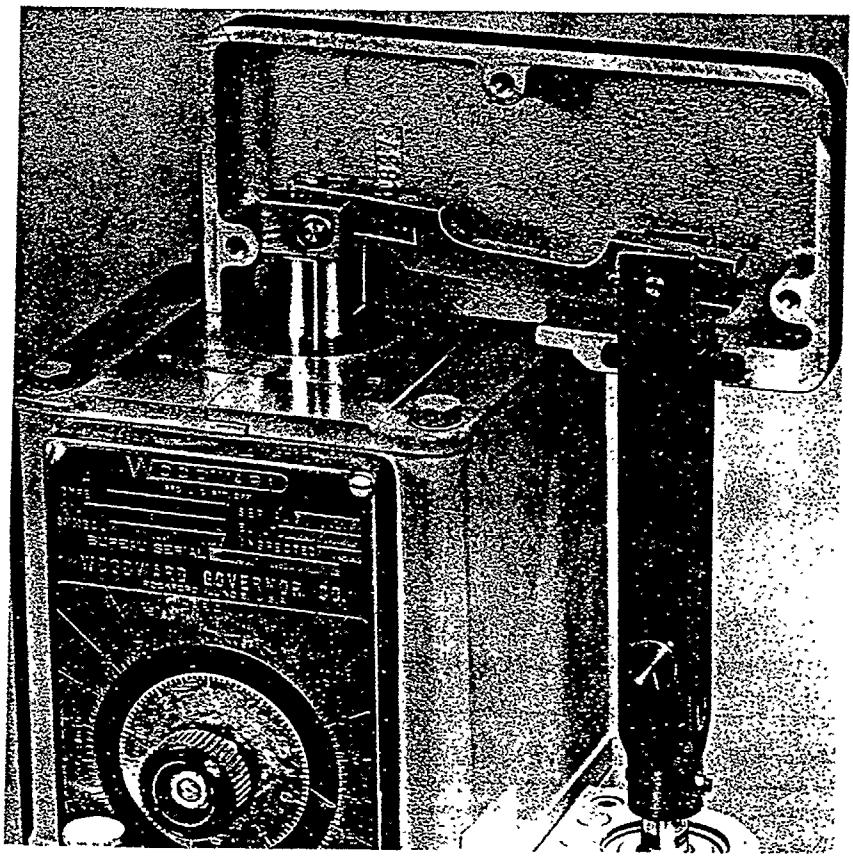

WOODWARD GOVERNOR COMPANY
ENGINE & TURBINE CONTROLS DIVISION
FT. COLLINS, COLORADO, U.S.A.

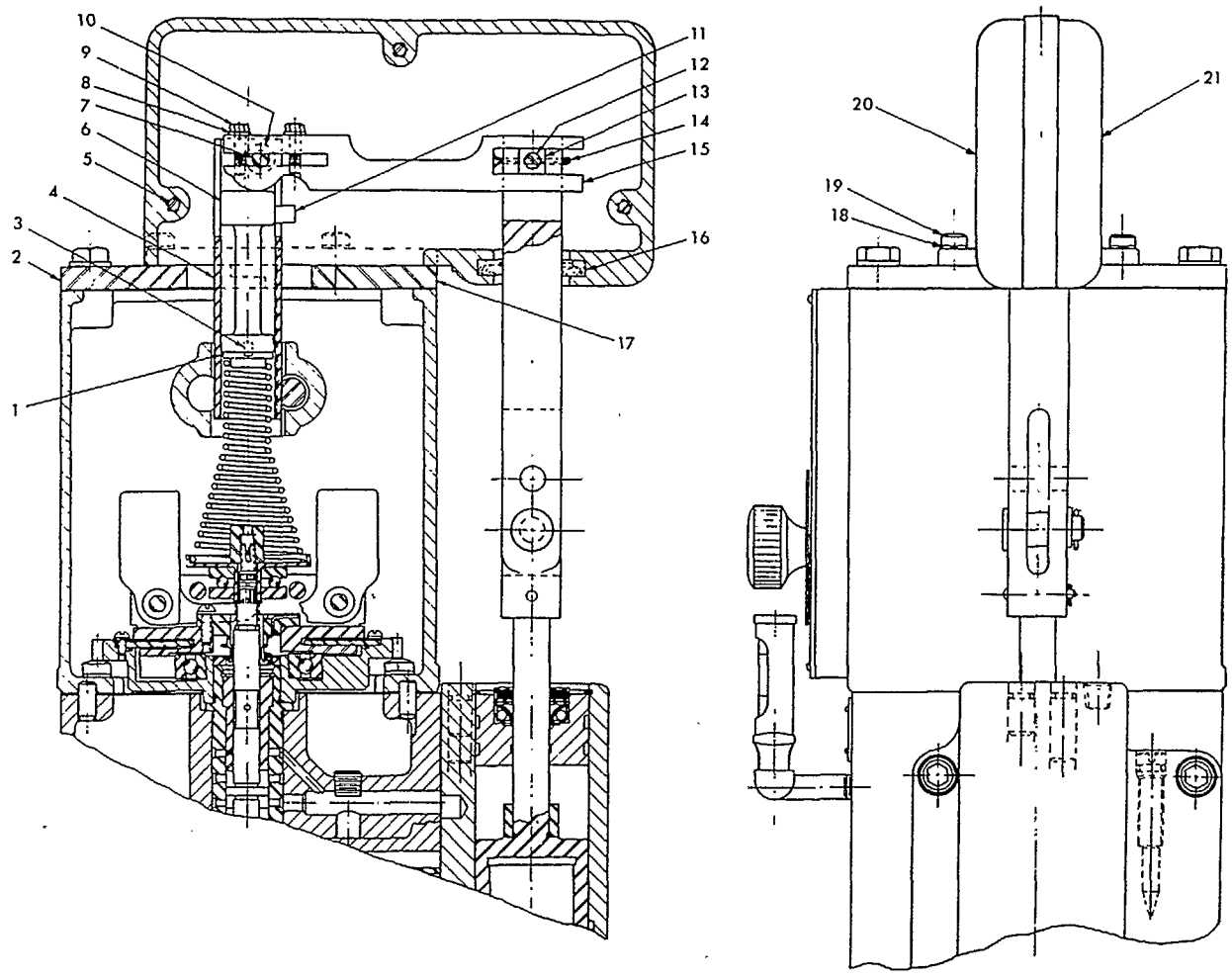

Cutaway View of Speed Droop Mechanism

Parts List for Speed Droop Components

REF. NO.	PART NAME	NO. REQ'D.	REF. NO.	PART NAME	NO. REQ'D.
36622- 1	Spring Check Plug	1	36622-12	Pin	1
36622- 2	Cover	1	36622-13	Speed Droop Block	1
36622- 3	Pin	1	36622-14	Cotter Pin – 1/16" x 1 1/8"	1
36622- 4	Speeder Plug Assembly	1	36622-15	Speed Droop Lever	1
36622- 5	Screw – 1/4"-20 x 1 1/2" Soc. Head	3	36622-16	Felt Wiper	1
36622- 6	Speeder Plug Plunger	1	36622-17	Cover	1
36622- 7	Speed Droop Lever Shaft	1	36622-18	Washer	4
36622- 8	Washer	2	36622-19	Screw – 3/8"-16 x 1" Soc. Head	4
36622- 9	Screw – No. 8-32 x 5/8" Hex Head	2	36622-20	Cover	1
36622-10	Needle Bearing	2	36622-21	Cover	1
36622-11	Pin	1			

SPEED DROOP MECHANISM FOR PG DIAL GOVERNORS

GENERAL

Speed droop is used to balance and divide load between engines (or turbines) running in parallel. Speed droop is defined as the decrease in governor speed as its output connection to the engine fuel racks (or valve) moves from minimum to maximum fuel positions. Speed regulation of an engine is defined as the decrease in engine speed as its load is increased from no load to full load (invariably accomplished by using less than the full governor stroke available), and is expressed in R.P.M. or as a percentage of normal speed. Since the normal speed of the governor is determined by the compression of the speeder spring, any change in compression of the speeder spring will change the normal speed of the governor.

OPERATION

The method of incorporating speed droop in a typical Woodward type PG governor is shown in figure 1. In those governors in which the rod end is below the governor power cylinder, a tailrod, connected to the governor power piston, is attached to the speed droop lever instead of the rod end shown.

For any given speed adjustment setting, the speeder plug is stationary. The position of the speeder plunger within the speeder plug is determined by the position of the cam on the speed droop lever.

The rod end (or tailrod) moves up and down with the governor power piston as it changes the fuel setting. The rod end movement raises or lowers the speed droop lever which, pivoting about the speed droop lever shaft, raises or lowers the cam on the speed droop lever. The speed droop lever shaft is positioned so that the speeder plunger is moved upward as the rod end moves in the direction to increase fuel. The shaft is between the cam and rod end on governors in which the rod end moves up (as shown in figure 1) to decrease fuel. On governors arranged so that the rod end moves up to increase fuel, the cam is between the lever shaft and rod end.

The upward movement of the speeder plunger as the governor moves to increase fuel for increased loads thus decreases the compression on the speeder spring, and the governor — and engine — runs at a slower speed. Conversely, when the governor power piston moves to decrease fuel as load decreases, the speeder plunger increases the speeder spring compression, and the governor and engine run at a faster speed.

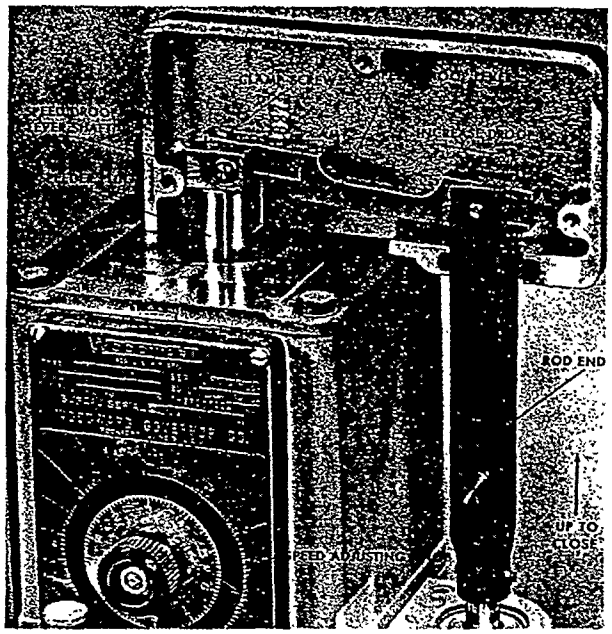

Figure 1, Speed Droop Mechanism Installed on a Typical PG Governor

ADJUSTMENT

Adjustment of the speed droop setting is accomplished by loosening the clamp screw and changing the position of the speed droop lever cam with respect to the speed droop lever shaft. Moving the cam away from the lever shaft increases the droop; moving the cam towards the lever shaft decreases the droop. If the center of the cam coincides with the center of the lever shaft, "zero droop" results and the governor will give isochronous (constant speed) operation. When decreasing the droop setting, care must be taken not to move the cam beyond the zero droop point since "negative droop" (i.e., speed increasing with load increases) leads to an inherently unstable system.

INFORMATION AND PARTS REPLACEMENT

When requesting additional information concerning droop or governor operation, or when ordering repair parts, it is essential that the following information accompany the request:

1. Governor serial number (shown on nameplate). The serial number is needed since the reference numbers given in this bulletin do not identify the exact part number required for any one governor.
2. Bulletin number. (This is Bulletin Number 36622.)
3. Part reference number, name of part, or description of part.

WOODWARD GOVERNOR COMPANY
MAIN OFFICE· Rockford, Illinois, U S A
Fort Collins, Colorado, U S A – Tokyo, Japan
WOODWARD GOVERNOR NEDERLAND N.V.
Hoofddorp, The Netherlands
WOODWARD GOVERNOR (U.K.) LTD.
Slough, Bucks, England

WOODWARD

TYPE PG GOVERNORS

ANALYSIS AND CORRECTION OF GOVERNING TROUBLES

SERVICE BULLETIN 36404A

GENERAL: It is impossible to anticipate every kind of trouble that will be encountered in the field. This bulletin covers the most common troubles experienced. Poor governing may be due to faulty governor performance, or it may be due to the governor attempting to correct for faulty operation of the engine or turbine auxiliary equipment. The effect of any auxiliary equipment on the overall control required of the governor must also be considered.

Approximately 95% of all trouble may be corrected by following these instructions. The other 5% may be of a nature requiring the services of a governor engineering specialist.

GOVERNOR OIL LEVEL: Governor oil level MUST be kept BETWEEN THE LINES on the oil level gauge glass WITH THE UNIT OPERATING. The CORRECT level is at the joint line of the power case and column — the upper line on the gauge glass — and NO HIGHER. Instructions given on decals near the oil gauge should be strictly adhered to.

For more complete information on oils to use, and when to change the governor oil, see Woodward Bulletin 25007, "Oils for use in Hydraulic Governors".

DIRTY OIL CAUSES APPROXIMATELY 50% OF ALL GOVERNOR TROUBLES: Use CLEAN new or filtered oil. Containers used to fill governors from bulk containers should be PERFECTLY CLEAN. Oil contaminated with water may cause foaming, will break down rapidly and corrode internal governor parts.

COMPENSATING ADJUSTMENTS: The compensating needle valve must be correctly adjusted with the governor controlling the engine or turbine, even though the compensation may have been previously adjusted at the factory or on governor test equipment. Although the governor may appear to be operating satisfactorily because the unit runs at constant speed without load, the governor still may not be correctly adjusted.

High overspeeds and low underspeeds, or slow return to speed, after a load change or speed setting change, are some of the results of an incorrect setting of the compensating needle valve.

Bulletins applicable to the various types of PG governors contain detailed instructions for adjusting the compensation:

ANALYSIS AND CORRECTION OF GOVERNING TROUBLES: The chart on the following pages may be used to determine the probable causes of faulty operation, and to correct these troubles.
Terms used in the chart are defined as follows:

1. **Hunt:** A rythmic variation of speed which can be eliminated by blocking governor operation manually, but which will recur when returned to governor control.

2. **Surge:** A rhythmic variation of speed, always of large magnitude, which can be eliminated by blocking governor action manually and which will not recur when returned to governor control, unless speed adjustment is changed or the load changes.

3. **Jiggle:** A high frequency vibration of the governor fuel rod end (or terminal shaft) and fuel linkage. Do not confuse this with normal controlling action of the governor.

WOODWARD GOVERNOR COMPANY

ROCKFORD, ILLINOIS, U.S.A.

BRANCHES: FT. COLLINS, COLORADO, U.S.A. TOKYO, JAPAN

SUBSIDIARIES: SLOUGH, BUCKS., ENGLAND LUCERNE, SWITZERLAND HOOFDDORP, THE NETHERLANDS

TROUBLE	CAUSE	CORRECTION
1. Engine hunts or surges.	A. Needle valve adjustment incorrect.	Adjust needle valve as described in governor bulletin.
	B. Buffer springs too light. This may occur on a new installation — or on an old installation by reason of deterioration of engine or fuel linkage, or as a result of a radical change in load conditions.	Install heavier buffer springs (consult governor manufacturer).
	C. Fuel linkage incorrectly set. This might occur if the governor has been changed or removed and replaced. Relationship of governor travel to power output of engine should be linear.	Rework or reset the linkage from governor to unit to obtain the linear relationship.
	D. Engine gas valve is not properly shaped to give linear relationship between governor travel and horse power output of the engine. Engine may hunt with light loads and be stable with heavy load.	Re-shape gas valve, or (if possible) adjust linkage from governor to gas valve to obtain linear relationship between governor travel and engine output.
	E. Lost motion in engine linkage, fuel pumps, or gas valve.	Repair linkage, fuel pumps, or gas valve.
	F. Binding in engine linkage, fuel pumps, or gas valve.	Repair and re-align linkage, fuel pumps or gas valve.
	G. Governor stroke too short. This may occur on a new installation.	Re-design or rework the fuel linkage to require more governor stroke. (Consult manufacturer of engine and governor).
	H. Low oil level. No harm will be done if top of oil is still visible in gauge glass.	Add oil — slowly — to the correct level in gauge.
	I. Dirty oil or foaming oil in governor.	Drain governor oil, flush governor to clean, and refill with proper clean oil. See Bulletin 25007. Bleed air and adjust the needle valve as described in governor bulletin.
	J. Governor worn or not correctly adjusted.	Repair and adjust governor. See governor instruction bulletin: a. Check flyweight pins and bearings for wear. b. Check flyweight toes for wear and/or flat spots. c. Check flyweight head thrust bearing, also centering bearing. d. Pilot valve plunger may be sticking — clean and polish if necessary. CAUTION — DO NOT break corners of control land. e. Check vertical adjustment of pilot valve plunger and correct if necessary. f. Clean and polish all moving parts to ensure smooth and free operation.
	K. Power piston rod bent and/or power piston sticking in cylinder.	Repair if possible. If rod is bent, install new piston and rod assembly.
	L. Engine is misfiring. This applies principally to gas engines.	Check pyrometer readings of each cylinder, and take steps to eliminate misfiring, if possible. Installation of preloaded buffer springs may be desirable. (Consult governor manufacturer).

TROUBLE	CAUSE	CORRECTION
2. Fuel pump racks do not open quickly when cranking engine.	A. Low oil pressure in governor.	a. Check governor pump gears and gear pockets for excessive wear. No correction except to replace worn parts. b. Examine pump check valves. If not seating tight, install new ones.
	B. Cranking speed too low.	May be necessary to use a booster servomotor (consult governor manufacturer).
	C. Booster servomotor (if used) not functioning properly.	Check action of automatic air starting valve.
3. Jiggle at governor rod end or terminal shaft.	A. Rough engine drive.	Inspect drive mechanism: a. Check alignment of gears. b. Inspect for rough gear teeth, eccentric gears, or excessive backlash in gear train. c. Check gear keys and nuts or set screws holding drive gears to shafts. d. Tighten chain between crankshaft and camshaft (if used). e. Check engine vibration dampener (if used).
	B. Failure of flexible drive in flyweight head.	Remove, dis-assemble and clean flyweight head parts. a. If rubber drive, install new rubber coupling. If more parts than the coupling need replacement, exchange the entire rotating sleeve and flyweight head assembly for a new assembly with spring drive and oil-damping. (Consult governor manufacturer). b. If spring drive, check spring and install new spring coupling assembly if necessary. Center the coupling for equal travel in opposite directions.
	C. Governor not bolted down evenly on engine mounting pad.	Loosen bolts, realign governor correctly and tighten bolts.
4. Load interchanges between connected units in parallel operation of an AC system. One unit on zero droop (to control system frequency) — all other units on droop.	Incorrect setting of the speed droop adjustment on one or more of the droop units. **NOTE:** If droop is not provided, the governor is isochronous only, and cannot be used for parallel operation in an AC system except as the lead engine.	Increase droop on affected units until load remains steady on each droop unit. System load variations will be taken by the lead unit with zero droop. The droop units will assist in correcting speed deviations on large disturbances, but will return to their original loads after the load change has been absorbed by the zero droop unit.
5. Load does not divide properly between connected units in parallel in a DC system — ship propulsion — or similar type installation. All units on droop.	Droop setting incorrect on one or more units. Speed droop — in the governor — is usually not essential in a DC system, the equivalent of speed droop being obtained electrically. However, governors with speed droop are commonly used for DC service since the droop adjustment may be used to correct for inequalities of generator compounding.	Adjust droop on each unit until desired division of load is obtained. Increasing droop will result in the unit taking a smaller share of load changes. Decreasing droop will result in the unit taking a larger share of load changes.

TROUBLE	CAUSE	CORRECTION
6. Engine is slow to recover from a speed deviation resulting from a change in load — or slow to respond to a change in speed setting.	A. Incorrect buffer springs in governor.	Install correct buffer springs (consult governor manufacturer).
	B. Governor oil pressure is low.	See Section 2 - A.
	C. Fuel supply restricted.	Clean fuel filters and fuel supply lines.
	D. Engine may be overloaded.	Reduce the load.
	E. Type PG governors with pneumatic-hydraulic speed control are designed to INCREASE speed setting slowly. If this is objectionable, special parts can be supplied to obtain faster action.	Consult governor manufacturer. Changes in field may require services of a governor engineering specialist.
	F. Supercharger does not come to new speed quickly to supply sufficient air to burn the added fuel.	No simple field correction. Consult engine and governor manufacturer, or overhaul the supercharger.
7. Engine will not pick up rated full load.	A. Fuel racks do not open far enough.	a. Check fuel pump stops and adjust as necessary. b. Check linkage between governor and fuel pumps and adjust if necessary. c. Certain special PG governors are equipped with a load limiting device, and the governor may be against the load limit. Adjustment may be made, if considered advisable. d. Oil pressure may be too low — see Section 2 - A. e. Oil in governor may be too light — change to next heavier grade (also see Bulletin 25007).
	B. Fuel supply restricted.	See Section 7 - C.
	C. Speed adjustment of the governor is limited when operating with speed droop and paralleled with an infinite bus.	a. Check and adjust maximum speed limit on a dial type PG governor. b. Check and adjust speed setting linkage on a lever type PG governor.
	D. Engine misfiring.	See Section 1 - L.
	E. Gas pressure too low.	Adjust pressure regulator in gas supply line.
	F. Supercharger does not supply sufficient air.	Overhaul supercharger.
	G. Slipping clutch (if used) between engine and driven load.	See Clutch Instruction Manual.
	H. Voltage regulator (if used) not functioning properly.	Readjust or repair voltage regulator.

PG GOVERNOR SPEED ADJUSTING MOTOR

PURPOSE: The speed adjusting motor is used to provide a means of remote speed adjustment for the PG governor. It enables the switchboard operator to match the frequency of an alternator to that of other alternators, and to change load distribution when operating with other units in the droop mode.

INSTALLATION: See figure 1 for placement of the speed adjusting motor and its drive components. The motor is a split-field, series-wound reversible type. The motor runs on either a-c or d-c power, and is available for several voltages. Figure 2 shows the proper way to wire the motor into an electrical circuit.

ADJUSTMENT: A friction-type slip coupling on the motor shaft (see figure 3) allows the speed setting to be adjusted by the knob on the governor panel as well as by the motor. If there is too little friction, the motor drive will slip. With too great friction, the manual drive will turn with extreme difficulty. If the coupling requires adjustment, follow this procedure: Loosen set screw 6 in nut 7. Tighten screw 8 in nut 7 to increase friction, or loosen screw to decrease friction. If screw 8 cannot be tightened for 3 to 3 1/2 inch-lbs. torque, either replace the fibre washer or place a shim between spring 21 and screw 8.

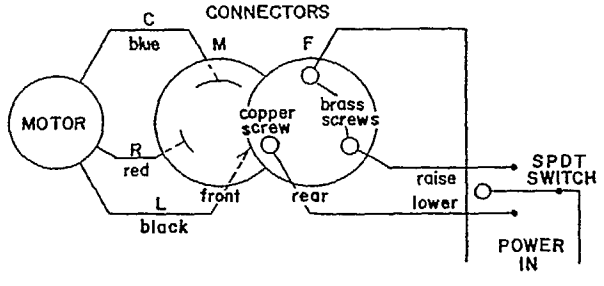

Figure 2. Suggested wiring circuit

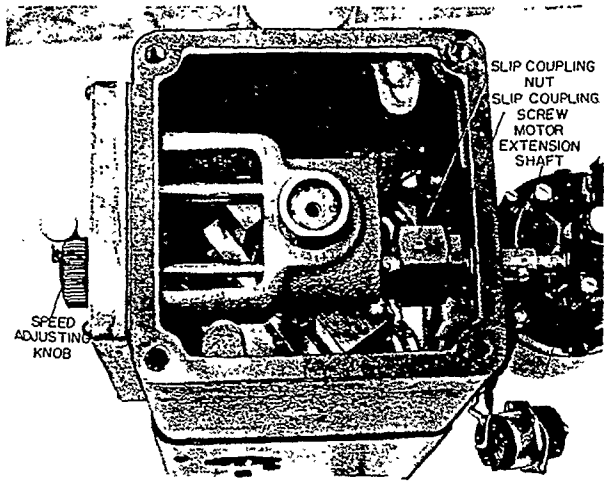

Figure 1. Motor and drive train

INFORMATION AND PARTS REPLACEMENT: When requesting information about governor or speed adjusting motor operation, or when ordering parts, the following information must accompany the request:

1. Governor serial number (shown on nameplate) and information stamped on motor nameplate. This information is needed because the reference numbers given in this bulletin do not identify the exact part numbers required for any one governor.
2. Bulletin number (this is bulletin 36014).
3. Part reference number, name of part, or description of part.

The motor should not be replaced until the failure of the remote speed adjustment is known to be a defect in the motor. First check the slippage on the coupling, the manual speed setting gear train for binding up, and the wiring to the motor for low (or no) voltage or poor connections.

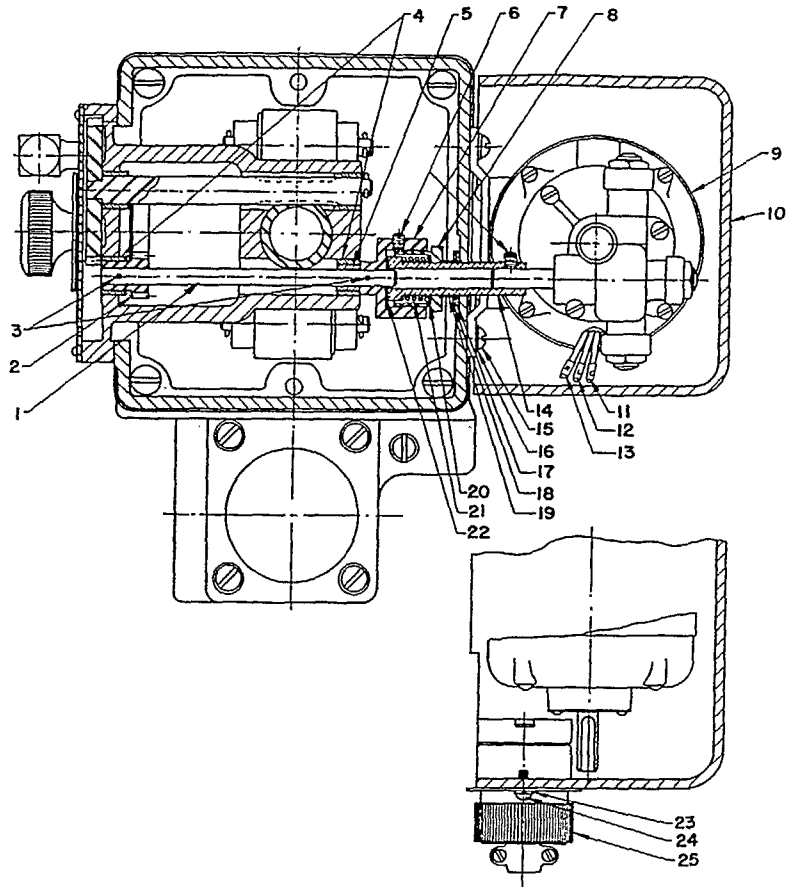

Figure 3. Motor and drive assembly

PART NO.	NAME	QTY.
36014- 1	Shaft	1
36014- 2	Gear	1
36014- 3	Taper Pin – 6/0 x 3/4"	2
36014- 4	Bushing	2
36014- 5	Bushing	1
36014- 6	Set Screw – #10-32 x 1/4"	2
36014- 7	Nut	1
36014- 8	Screw	1
36014- 9	Motor	1
36014-10	Cover	1
36014-11	Wire Marker – C	1
36014-12	Wire Marker – L	1
36014-13	Wire Marker – R	1

PART NO.	NAME	QTY.
36014-14	Plug	1
36014-15	Screw – #10-32 x 1/2"	4
36014-16	Washer – #10 Shakeproof	4
36014-17	Felt Washer	1
36014-18	Washer	1
36014-19	Spring	1
36014-20	Fibre Washer	1
36014-21	Spring	1
36014-22	Fibre Washer	1
36014-23	Washer – Splitlock	2
36014-24	Screw – #8-32 x 3/8"	2
36014-25	Connector	1

WOODWARD
®

BULLETIN 36014B

PG GOVERNOR SPEED ADJUSTING MOTOR

WOODWARD GOVERNOR COMPANY
ENGINE & TURBINE CONTROLS DIVISION
FT. COLLINS, COLORADO, U.S.A.

WOODWARD GOVERNOR COMPANY
MAIN OFFICE Rockford, Illinois, U S A
Fort Collins, Colorado, U.S.A. – Tokyo, Japan
WOODWARD GOVERNOR NEDERLAND N.V.
Hoofddorp, The Netherlands
WOODWARD GOVERNOR (U.K.) LTD.
Slough, Bucks., England

WOODWARD

BULLETIN 36614

PG GOVERNOR

DIAL TYPE SPEED SETTING

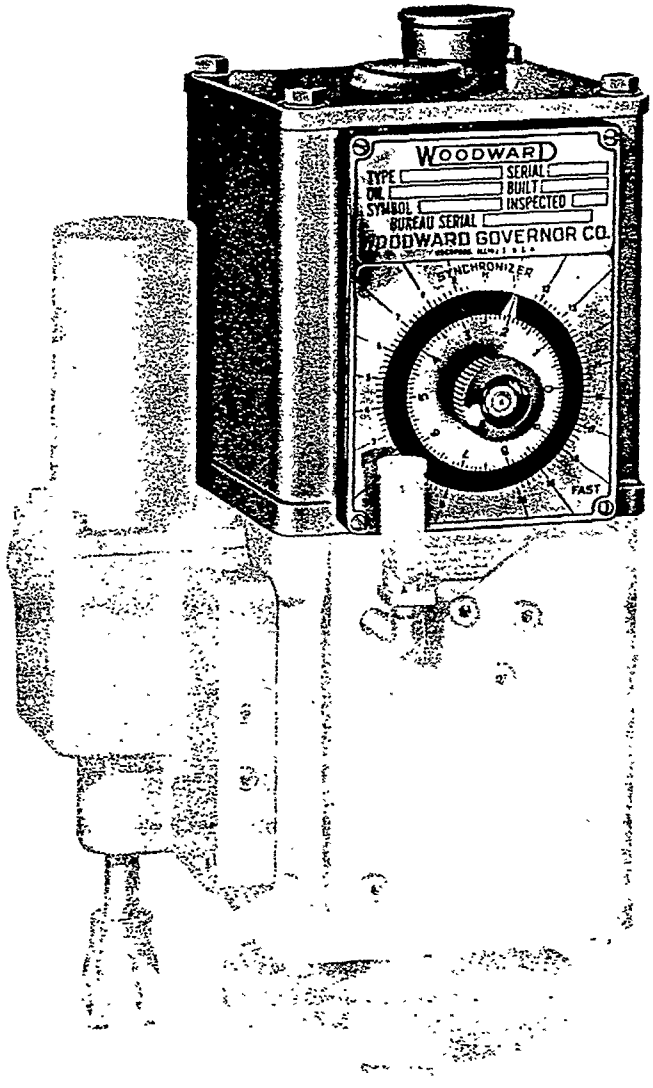

WOODWARD GOVERNOR COMPANY
ENGINE & TURBINE CONTROLS DIVISION
FT. COLLINS, COLORADO, U.S.A.

MAIN OFFICE: **ROCKFORD, ILLINOIS, U.S.A.**

BRANCHES & SUBSIDIARIES:
HOOFDDORP, THE NETHERLANDS • SLOUGH, BUCKS., ENGLAND • TOKYO, JAPAN

This bulletin is one of several covering various components of the type PG governor, and can be combined with other "sectional" bulletins to describe fully a particular PG governor model.

PG DIAL SPEED SETTING

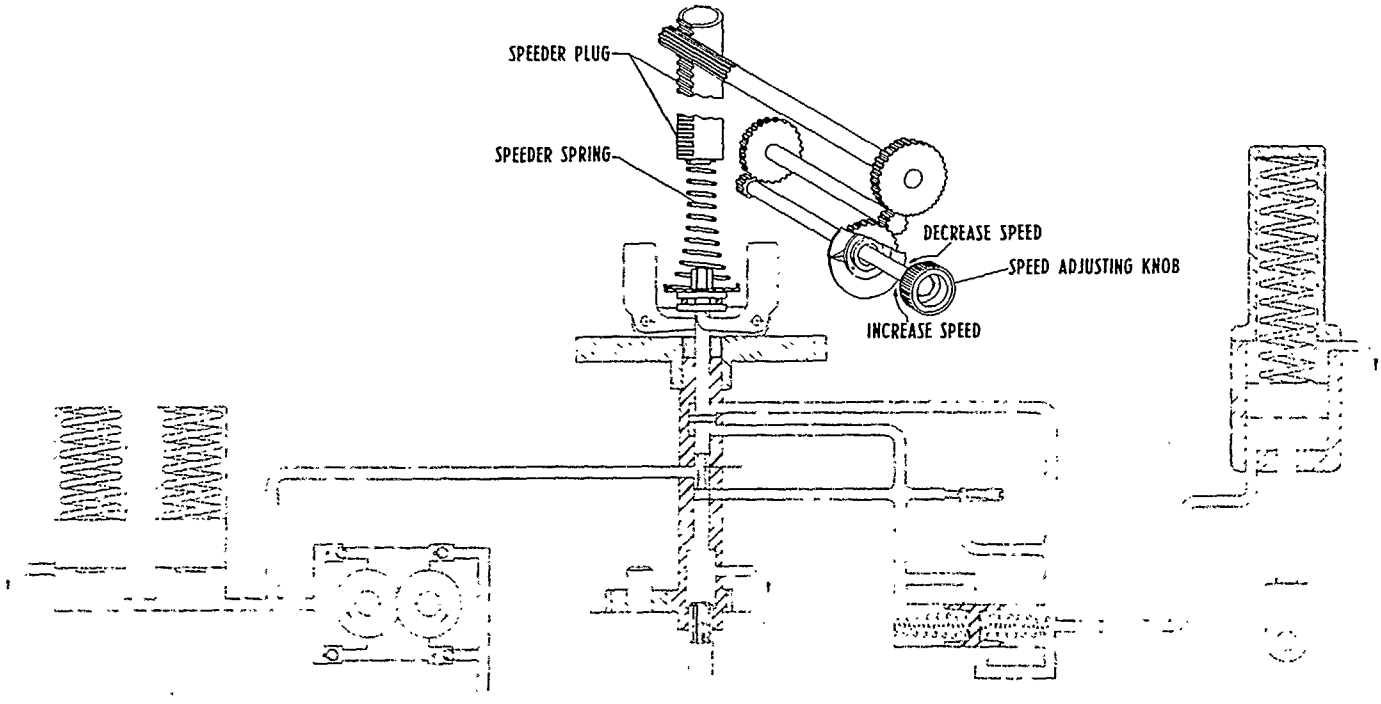

Figure 1

GENERAL:

This bulletin covers operation, repair, and adjustment of parts lists for the dial type speed setting for short column PG governors. This type speed setting (one of many arrangements available for use on PG governors) allows a precise means of manually adjusting speed at the governor.

OPERATION:

Refer to schematic (figure 1). The governor speed setting is determined by the compression of the speeder spring; the speeder spring compression is determined by the position of the speeder plug, which is raised or lowered by rotation of the speed setting knob. Refer to the Woodward bulletin covering PG governor basic elements for a description of the effect of a speed setting change on the operation of the basic elements.

MAINTENANCE:

GENERAL: When requesting information concerning operation, or when ordering replacement parts, it is essential that the following information be included:

1. Serial number (shown on nameplate).
2. The part reference number as shown in this bulletin.
3. A description, or name, of the part.

The best mechanic available (preferably one experienced with small, precision assemblies) should be assigned to all governor repair work. Governor repair should be performed in a separate area kept free from dirt, grit, or corrosive vapors.

© Woodward Governor Company, 1967

DISASSEMBLY: Refer to figure 3.

TOP COVER:

1. Remove cover screws (1) and washers (2).
2. Remove cover (4) and gasket (5).

COLUMN ASSEMBLY:

1. Back out four fillister head screws (6) (located at lower inside corners of column) and lift column (8), gasket (11), lockwashers (7), and screws (6) vertically from the power case, as shown in figure 2.

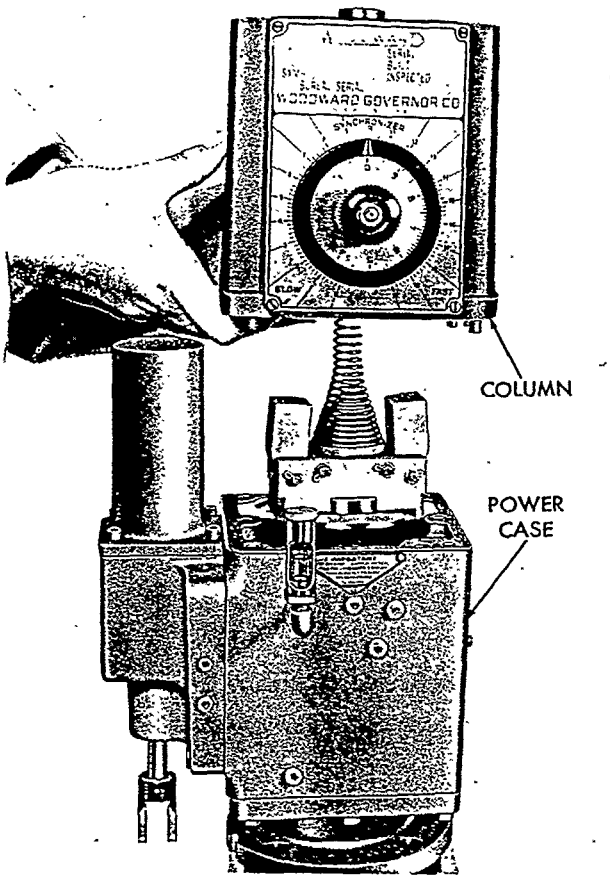

Figure 2

2. Turn speed indicating dial counter-clockwise against the low speed stop.
3. Measure and record the distance from the top of the speeder plug (14) to the top of the column (8).
4. Remove round head screws (28) and take off dial plate (27).
5. Taking care that speeder plug (14) does not slip out, back off elastic stop nut (34) and remove the speed setting knob (33), numbered disc (32), indicator gear (30) with pointer disc (31), dial shaft assembly (17), washer (18), spring (19), and pinion assembly (12). Turn gear shaft assembly (22) to run speeder plug (14) out of bore in column. Remove shaft assembly.
6. Remove screws (23), panel (15), and panel gasket (9).

INSPECTION AND CLEANING:

After disassembly, clean all parts in solvent and carefully inspect for wear. Most of the repair work consists of cleaning and polishing the governor parts. Discard gaskets (5, 9, and 11). Take care that no lint or other foreign matter is left on the parts.

ASSEMBLY:

1. Install panel (15) and new gasket (9) with screws (23).
2. Install gear shaft assembly (22) and speeder plug (14).
3. Place the spring (19) and washer (18) in position with one hand, and with the other replace the dial shaft assembly (17) and the pinion assembly (12).
4. Holding the dial shaft assembly (17) in position, install indicator gear (30) with pointer disc (31) and turn the dial shaft until the speeder plug (14) is the same distance from the top of the column as recorded in disassembly.
5. Position the indicator gear against the low speed stop and install pointer disc (31), numbered disc (32), speed setting knob (33), and secure with elastic stop nut (34).
6. Replace dial plate (27) with round head screws (28).
7. Install new case-column gasket (11).
8. Place lockwashers (7) and fillister head screws (6) in holes in lower flange of the column (8). Align speeder spring check plug (shown in bulletin 36600 or 36602) so that it will seat properly in bore in speeder plug. Align dowel pins (in column) with holes in power case and place column on power case. Fasten with screws (6) and lockwashers (7).
9. Install cover (4) with new gasket (5). Secure with screws (1) and lockwashers (2).

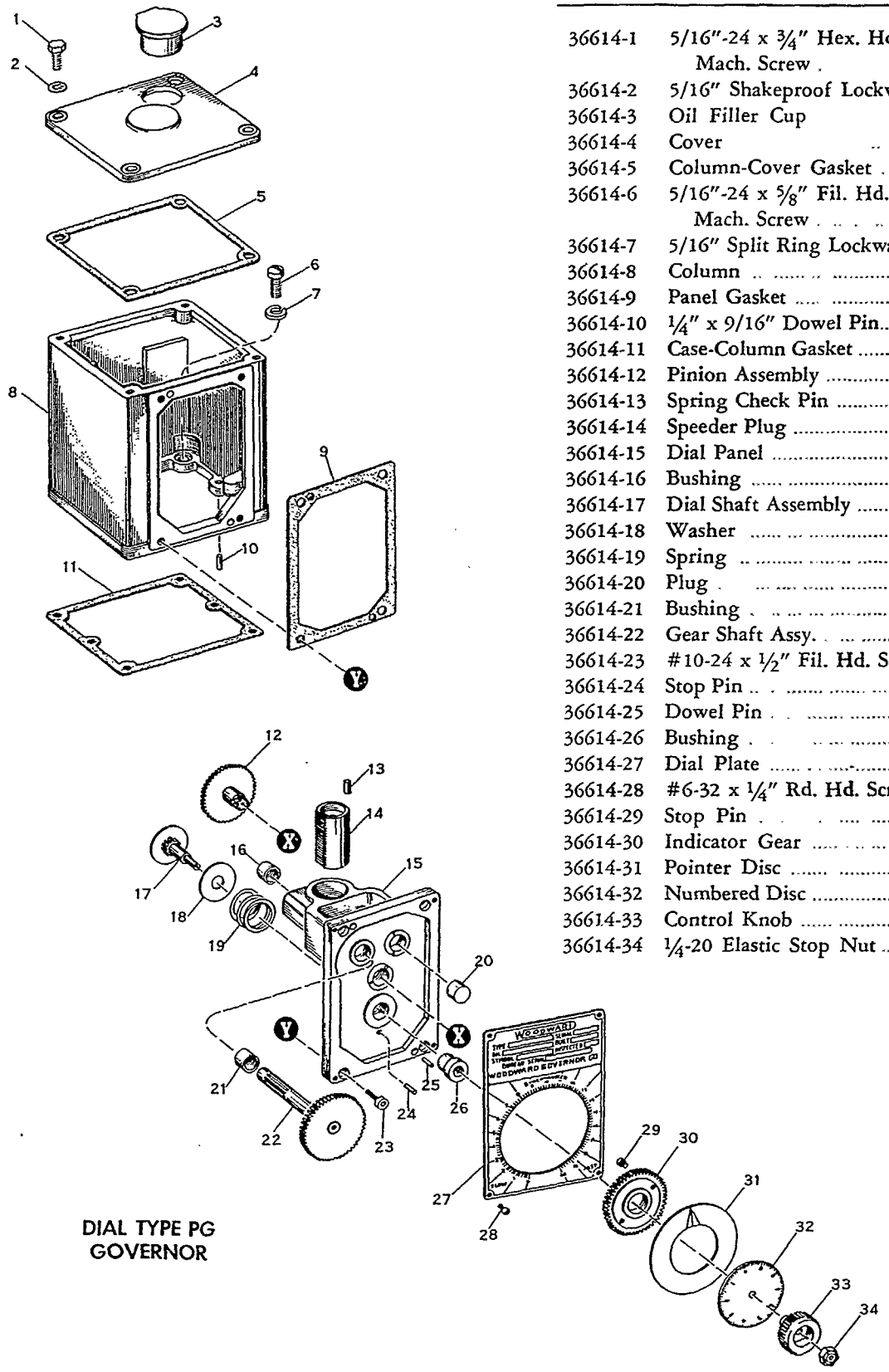

DIAL TYPE PG GOVERNOR

REF. NO.	PART NAME	NO. REQ'D.
36614-1	5/16"-24 x 3/4" Hex. Hd. Mach. Screw	4
36614-2	5/16" Shakeproof Lockwasher	4
36614-3	Oil Filler Cup	1
36614-4	Cover	1
36614-5	Column-Cover Gasket	1
36614-6	5/16"-24 x 5/8" Fil. Hd. Mach. Screw	4
36614-7	5/16" Split Ring Lockwasher	4
36614-8	Column	1
36614-9	Panel Gasket	1
36614-10	1/4" x 9/16" Dowel Pin	2
36614-11	Case-Column Gasket	1
36614-12	Pinion Assembly	1
36614-13	Spring Check Pin	1
36614-14	Speeder Plug	1
36614-15	Dial Panel	1
36614-16	Bushing	1
36614-17	Dial Shaft Assembly	1
36614-18	Washer	1
36614-19	Spring	1
36614-20	Plug	1
36614-21	Bushing	1
36614-22	Gear Shaft Assy.	1
36614-23	#10-24 x 1/2" Fil. Hd. Screw	4
36614-24	Stop Pin	1
36614-25	Dowel Pin	2
36614-26	Bushing	1
36614-27	Dial Plate	1
36614-28	#6-32 x 1/4" Rd. Hd. Screw	4
36614-29	Stop Pin	2
36614-30	Indicator Gear	1
36614-31	Pointer Disc	1
36614-32	Numbered Disc	1
36614-33	Control Knob	1
36614-34	1/4-20 Elastic Stop Nut	1

Figure 3

SPEED LIMIT ADJUSTMENT:

When changing speed setting adjustments or the pointer indication, use the following procedure. Do not make these adjustments unless the linkage from the governor to the engine fuel racks (or metering valve) has been properly adjusted. Make certain that the engine is at idle speed or lower when the governor is set for low speed.

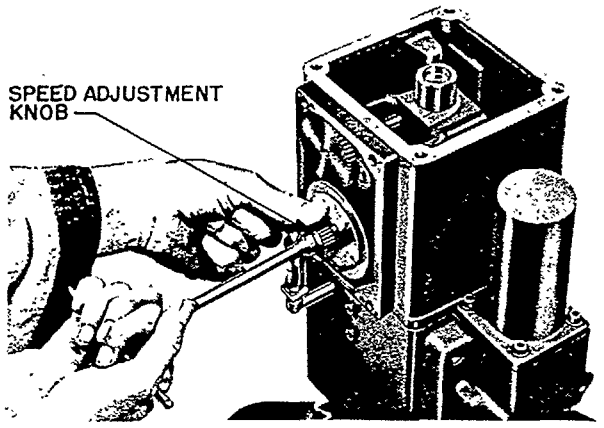

Figure 4

Shut the engine down and remove the governor cover and dial plate. Back off the elastic stop nut securing the speed adjusting knob, as shown in figure 4, until the fibre insert in the nut comes off the threads of the dial shaft. At this point, the nut will turn much easier.

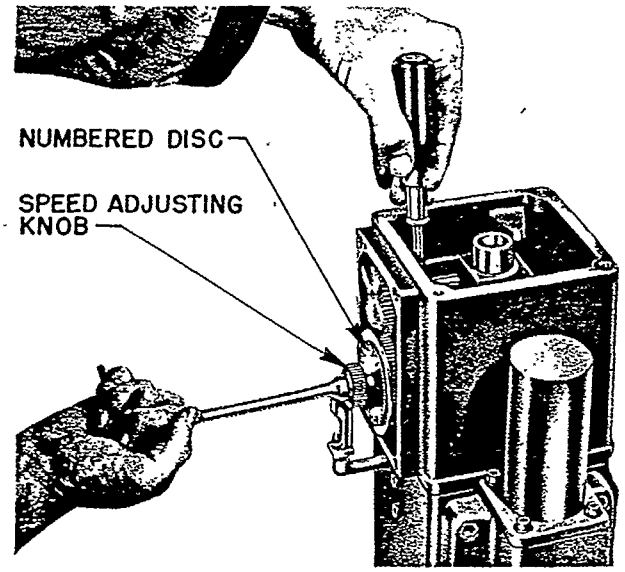

Figure 5

Now, before the nut is turned off the shaft, hold th inside end of the shaft (pc. 17, fig. 3) with a screwdriver (figure 5) to prevent its being forced back through the bushing by the dial shaft spring and remove the elastic stop nut, speed adjusting knob, and numbered disc. Replace the knob (leaving numbered disc off) and turn the stop nut back on, using only about two threads. Do not tighten. Remove the screwdriver and pull the indicator gear (30) with pointer disc (31) out of mesh with the pinion assembly (figure 6).

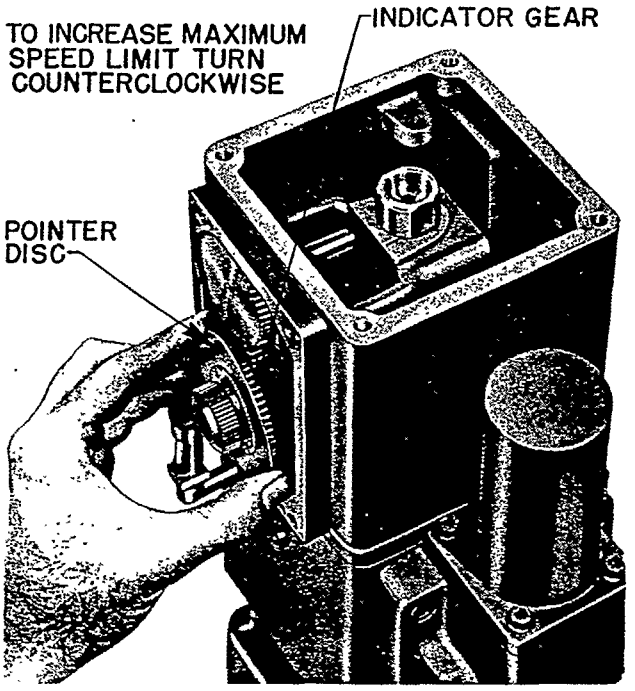

Figure 6

Start the engine and adjust to the desired high speed with the knob. Remesh the indicator gear with the high speed stop pin of the indicator gear against the stop pin (24) in the face of the panel. Replace the dial plate to check the pointer reading. If the pointer does not indicate the desired position on the dial plate, pry the pointer disc off and reposition it on the indicator gear.

Check the low speed by turning the speed adjusting knob until it contacts the low speed stop. (On dials calibrated in rpm, an error of 10% between engine speed and pointer reading may be expected at low speed.)

When the desired high and low speeds have been obtained, shut down the engine, remove the elastic stop nut and speed adjusting knob as before; be sure to hold screwdriver behind dial shaft when removing elastic stop nut and knob. Reassemble numbered disc, knob, and elastic stop nut. Tighten nut.

SUPPLEMENT A

SECTION C—DESCRIPTION OF REDUCTION GEAR AND ACCESSORIES

1-C-6A GOVERNOR AND OIL PUMP DRIVE ASSEMBLY

a. The driving element for governor and main oil pump shown in Figure T-15 consists of main gear "5" fitted with an integral stub shaft, upon which is mounted a bevel pinion that drives the bevel gear. The gear is secured to drive shaft "3", that rotates in bearing "6" and is connected at its lower end to the main oil pump, and at the upper end to spline shaft "29", Figure T-13A, Tab 4. Driver gear "13", secured to the spline shaft, drives gear "10". Governor "8" contains its own oil pump which runs on the same drive assembly, to pressurize the steam-valve operator hydraulic control line.

b. Gear "5", Figure T-15, driven by the high speed pinion, rotates in bearings "7" mounted in pump support "2". Spacer "10" is located on the stub shaft integral with gear wheel "5".

The pinion of bevel pinion and gear assembly "8" is mounted on the stub shaft with key "13" and secured by stop nut "11".

c. The spiral bevel gear is mounted on shaft "3" with key "12" and secured in place by coupling "4" locked in position by setscrew "17". Thrust washer "9" is installed between the bevel gear hub and the thrust surface of bearing "6".

d. The governor and oil pump drive assembly is mounted on the gear housing base, and the method of lubricating the bearings, meshing gears and pinions is shown in the Oil System and Control Diagram, Figure T-20A, Tab 6.

e. Oil spray nozzle "28", Figure T-13A, Tab 4, provides lubrication at the mesh of the driver and driven gears.

1-C-7A MAIN OIL PUMP

a. The main oil pump is shown in Figure T-16. The pump is mounted in the oil reservoir and driven by the oil pump and governor drive assembly, Figure T-15.

b. As shown in Figure T-16, the pump consists of two driven helical gears, "6" and "7", mounted on shaft "11" meshing with two driving helical gears "4" and "5". The driving gears are mounted on and secured to shaft "10" by key "14". Gear shafts "10" and "11" are mounted in bearings "8" and "9". The driving and driven gears with their respective bearings are enclosed in pump discharge and suction housing halves "2" and "3".

c. The lower end of drive shaft "3", Figure T-15, is threaded into coupling "15" of Figure T-16 and secured in place by setscrew "16". The lower end of drive shaft "3", Figure T-15, is threaded into coupling "15" of Figure T-16 and secured in place by setscrew "16". The lower end of the coupling engages splines machined on upper end of shaft "10".

d. A nozzle pump suction is integral with pump housing half "3" which is continually submerged in oil in the reservoir. Rotation of the pump gears entrains oil between the gear teeth and housing wall, sweeping oil from suction to discharge. Any oil return, except for a small amount of leakage, is prevented by the meshing teeth of the gears.

e. As shown in Oil System and Control Diagram, Figure T-20A, the oil pump gear bearings are submerged in an oil bath and lubrication of bearing surfaces is constant.

1-C-8A AUXILIARY OIL PUMP, MANUALLY OPERATED

a. The manually operated, self-priming auxiliary oil pump, used to supply oil for the system when starting from a cold unit condition is shown in Figure T-17. It is operated by turning crank "5" clockwise and will deliver 9.0 gpm at 100 psi when operated at 100 rpm. Crank "5" turns shaft "12" and rotor "7" in the same direction. Packing "13" and packing nut "11" prevent leakage along the shaft where it extends through cylinder head "2".

b. The rotor, eccentric to the centerline of the pump cylinder, contains three spring positioned vanes "9", which operate with small axial clearance and follow the inner surface of the pump body, being pressed out by springs "10". Oil entering from the suction side is imprisoned between consecutive vanes and carried around to the discharge side. Small axial clearance between the vanes and the cylinder heads, prevents oil from returning to the suction side except for a very small amount of leakage.

c. The auxiliary oil pump furnishes oil for lubrication and simultaneously provides enough oil pressure to actuate the start-sequence valve to open the steam-chest valves. Pressure required to open the throttle valve and to operate the start-sequence valve is discussed in paragraph 1-B-21A.

1-C-9A OIL COOLER, STRAINER AND BY-PASS VALVE

a. The assembly shown in Figure T-18 consists of an oil cooler, duplex oil strainer, and a strainer by-pass valve. Two relief valves are installed in the oil inlet side of the assembly. See the Oil System and Control Diagram, Figure T-20A, Tab 6, for the diagrammatic location of the assembly.

b. The L.P. (adjustable orifice) relief valve, installed adjacent to the strainer by-pass valve, is set to maintain oil pressure of 10 psig in the strainer-cooler and bearing oil supply system. The H.P. relief valve, installed below the by-pass valve, is set to open at 75 psig, discharging into a drain line to the oil reservoir.

c. The oil cooler is a shell-and-tube type, with oil circulating through the shell around the tubes, and cooling water making two passes through the tubes. The tubes are straight and rolled into both tube sheets. The inlet-outlet tube sheet is secured between the shell and the inlet-outlet water chamber, but the reverse tube sheet is free to float endwise within the shell, and sealed against leakage of oil to water or water to oil by two rings of packing clamped between the shell and the reverse chamber. Gaskets prevent leakage at the joints between the inlet-outlet water chamber, tube sheet and shell connections.

d. Flanged oil and water connections are made to the shell, so that the water chambers can be removed without disturbing piping and vents are provided in the inlet-outlet water chamber cover. Both water chamber covers have been provided with zinc pencil electrodes secured to pipe plugs. Inspect the zinc pencils at intervals of not less than thirty days and clean or replace if their condition warrants. Removal of the pencil-plug from the reverse chamber cover allows full drainage from the tube side.

e. Oil pressure in the shell should be higher than water pressure in the tubes, so that a leaky tube will not contaminate the oil supply, although it will cause a loss of oil from the system. If the quantity of oil in the reservoir diminishes, inspect the cooler at once for leaks.

f. The duplex oil strainer, shown in Figure T-18 is equipped with magnets for removal of ferrous materials from the oil. The basket assembly is of reinforced construction, basket "44" of wire mesh being strengthened by outer framework "36". Each basket is provided with handle "38" by means of which the basket can be lifted

out for cleaning and which also holds the basket in place, the handle being compressed by cover "5".

g. Oil flow to the individual strainers is controlled by plug "3" so designed that when turned in its conical seat by lever "20", it will change over the inlet and outlet connections from one strainer to the other, but will not cut off the oil flow during the changeover period. The purpose of jack lever "13" is to loosen the conical plug from its seat before turning lever "20". After changeover has been made, tighten the jack lever securely seating the plug on the seat to prevent oil seepage around the plug.

1-C-10A OIL SYSTEM

a. The arrangement of the oil system is shown diagrammatically in Figure T-20A, Tab 6. The system consists of a reservoir formed by the reduction gear housing, a main oil pump, a cooler, a duplex strainer, an oil filter, and a duplex H.P. oil filter, hand-operated auxiliary oil pump for use when starting or stopping the turbine, and connecting piping.

b. The oil level in the reservoir is shown by a dipstick located at the generator end of the gear housing base. The oil level should be maintained so that it is between the maximum and minimum limit marks on the stick when the unit is in operation.

c. During normal operation, the main pump discharges at pressures in excess of 75 psig. Some of this oil is directed through passages and external piping to operate the governor, steam chest, and throttle valve operating mechanisms. The pressure in this part of the system is maintained at a maximum of 75 psig by a relief valve, in the strainer assembly, which discharges excess oil back into the reservoir. The rest of the oil is directed through an L.P. relief valve (adjustable orifice) to the strainer and cooler, and then to lubricate the bearings and reduction gear teeth. The L.P. relief valve limits the pressure in this part of the system to 10 psig.

During operation, a portion of the H.P. oil flows through a 7/32 inch diameter fixed orifice and an oil filter into the oil cooler/bearing supply system, by-passing the L.P. relief valve. Cut-out valves are installed in the by-pass line, on each side of the oil filter as shown in Figure 20A, Tab 6, to allow the line to be closed off for inspection or replacement of filter cartridges.

NOTE

The maximum permissible temperature of oil leaving any bearing is 180° F. The temperature rise of oil passing through any bearing should not exceed 50° F.

d. As shown in the Oil System and Control Diagram, Figure T-20A, Tab 6, a low-pressure-alarm contact maker is connected in the most remote part of the system to sound an alarm if oil pressure at the bearings drops to 4 psig. The alarm contact maker is shown in Figure T-19. A by-pass valve, around the cooler is provided so that the cooler can be taken out of service for cleaning, or repair, while the unit is operating. Do not turn on cooler circulating water when starting the unit, until normal bearing operating temperatures have been established. When the unit is in service carefully adjust oil cooler water circulation to prevent under-cooling of the oil.

1-C-11A LUBRICATING OIL

a. Use oil, Navy symbol 2190-T, having a viscosity of 185-205 S.S.U. at 130° F in the oil system.

TURBINE-GENERATOR UNIT

SUPPLEMENT A

SECTION H—MAINTENANCE

1-H-11A STEAM-VALVE OPERATOR AND GOVERNOR ADJUSTMENT

a. The steam-valve operator was adjusted at the factory and, except for removing air from the oil control line between the governor and valve operator when the turbine is operated for the first time, or anytime this line has been loosened, no other adjustments should be necessary.

b. Adjustment of the governor compensating needle valve and anticipation needle valve may be required after the TG set has been in operation. Proper adjustment is necessary to ensure that both the governor and steam-valve operator respond to load change and oil pressure impulses.

c. To make adjustments to correct turbine hunting or excessive speed deviation recovery time, proceed as follows:

NOTE

Speed deviation recovery time can only be checked by using tracing instrumentation.

1. Screw the anticipation needle valve in until it is closed; then back out one-half turn. Start turbine and open compensating needle valve three or four turns; this should cause the turbine to hunt. Using a key wrench, loosen the air vent plug—an instruction plate on the side of the governor case identifies this plug—far enough to establish a leak, and allow the turbine to hunt for a period of time so that air trapped in the governor oil passages will escape at the vent plug. When air bubbles are no longer apparent, tighten the vent plug and, if necessary, add oil to the governor using the same oil used for the turbine. Verify correct oil level in the governor gage glass.

NOTE

It will also be necessary to purge air from the control line between the governor and the signal pressure receiving bellows in the operator.

2. Slightly loosen oil line connections between governor and operator, and also the oil supply line at the operator so that air will be removed as oil flows from the connections. Check oil level in governor gage glass and, if necessary, add oil.

3. Bleed air from the operator bellows, if required, by turning screw "28", Figure T-14A, Tab 5.

4. Close governor compensating valve until hunting is just eliminated, or if not eliminated, minimized. Now, turn anticipation valve both in and out from its original one-half turn position to find speed deviation recovery time.

NOTE

The speed deviation recovery time is approximately two seconds.

5. After finding the best setting for the anticipation valve, check to see whether or not the compensating valve can be opened further without causing instability. The

objective is to have the compensating valve closed as far as possible.

NOTE

The operator restoring adjustment adjusts the position of the output piston of the operator with respect to the governor power piston position.

6. Adjust restoring spring "54", so that output piston "3" begins to move down from its uppermost position just as the governor power piston begins rising from its lowest position.

NOTE

Increasing the preload on the restoring spring will cause the operator output piston to move in the decrease steam direction.

1-H-12A STEAM-VALVE OPERATOR, DISASSEMBLY AND REASSEMBLY

To disassemble the steam-valve operator, proceed as follows:

1. Disconnect steam valve linkage from operator. See Figure T-14A, Tab 5.

2. Remove holddown screws "20" from case "65". Remove cover "4" with seal plate "51" and spacer "86" attached.

NOTE

To replace seal plate "51" and spacer "86", perform step 3.

3. Remove screws "43" and lift clamping washers "55".

4. Remove snap ring "30" and lift off spring "54".

NOTE

Measure and record distance between stop clamp "78" and snap ring groove before proceeding with the next step. This distance can be reset on reassembly.

5. Loosen screw "78" and remove stop clamp "79".

NOTE

It is not necessary to remove spring seat "58" unless something is wrong with lever "68" or the spring seat. If either needs to be replaced, perform the following steps.

6. Loosen screw "45".

7. Remove screw "28" and washer "31". Next, remove screws and clamp plate on pilot valve end of lever "68". Tilt lever "68" and remove screws at the other end of lever assembly. Remove nut "24" and disconnect pilot valve from lever assembly. Remove lever assembly.

8. To lift out bellows assembly "5", remove screws "49".

WARNING

EXERCISE EXTREME CARE WHEN REMOVING COVER "66". SPRING "53" WHICH EXERTS PRESSURE ON POWER PISTON "3" PUSHES THE PISTON AGAINST THE COVER.

9. Replace two holddown screws "22" with longer screws (use 5/16-inch 18 by 1-3/4 inch long). Back out the other two screws "22" evenly, allowing the cover to rise. When these become free, replace them with two 2-1/2 inch long screws, and in turn replace the 1-1/2 inch long screws with 3-1/4 inch long screws. When the free

length of the spring is reached (when the 2-1/2 inch screws have been removed) remove the cover, piston and spring.

10. To remove pilot valve sleeve "56" and pilot valve plunger "57", disconnect bracket "60".

11. To disconnect oil motor housing with the oil motor assembly, remove two screws "29". To disassemble the oil motor, remove two screws "74".

12. Reassemble the valve operator in reverse order of disassembly.

SUPPLEMENT A

GENERAL INDEX

Description	Paragraph	Page
Accumulator Assembly	1-B-22A	503
Adjustment, Steam Valve Operator and Governor	1-H-11A	509
Auxiliary Oil Pump, Manually Operated	1-C-8A	506
By-pass Valve	1-C-9A	506
Chest, Steam	1-B-17A	501
Cooler, Oil	1-C-9A	506
Disassembly and Reassembly, Steam Valve Operator	1-H-12A	509
Drive Assembly, Governor and Oil Pump	1-C-6A	505
Duplex Oil Filter	1-B-23A	504
Flow Control Valve	1-B-20A	503
Governor, Adjustment	1-H-11A	509
Governor and Oil Pump Drive Assembly	1-C-6A	505
Governor, Turbine	1-B-18A	502
Lubricating Oil	1-C-11A	507
Main Oil Pump	1-C-7A	505
Oil Cooler, Strainer and By-pass Valve	1-C-9A	506
Oil Filter	1-B-23A	504
Oil, Lubricating	1-C-11A	507
Oil Pump, Auxiliary	1-C-8A	506
Oil Pump, Drive Assembly	1-C-6A	505
Oil Pump, Main	1-C-7A	505
Oil System	1-C-10A	507
Operator, Steam Valve	1-B-19A	502
Pump, Auxiliary, Manually Operated	1-C-8A	506
Pump, Main Oil	1-C-7A	505
Start Sequence Valve	1-B-21A	503
Steam Chest and Valves	1-B-17A	501
Steam Valve Operator	1-B-19A	502
Steam Valve Operator and Governor Adjustment	1-H-11A	509
Steam Valve Operator, Disassembly and Reassembly	1-H-12A	510
Strainer	1-C-9A	506
System, Oil	1-C-10A	507
Turbine Governor	1-B-18A	502
Valve, Start Sequence	1-B-21A	503
Valves, Steam Chest	1-B-17A	501

FOR REVISIONS SEE SHEET NO. 2

FOR LIST OF GENERATOR, EXCITER, AND VOLTAGE REGULATOR DRAWINGS
REFER TO "CERTIFICATION DATA FOR 1500 KW GENERATOR," (W) EAST
PITTSBURG DRAWING 510D349

NAVY PUBLICATIONS AND PRINTING SERVICE MICROFILM JOB NO.

BEFORE ORDERING MAT'L CONSULT VARIATION DWG: SHEET 11 LINE 1 FRAME

SHOP ORDER NO. 41V2636		
	SIGNATURE	DATE
PREPARED	J Carson	9-4-69
CHECKED		
DESIGN ENG	[illegible]	10-15-9

WESTINGHOUSE ELECTRIC CORPORATION
SUNNYVALE, CALIFORNIA, 94088

TITLE
PLAN LIST
1500 KW TURB. GEN. SET

GOVT APPROVED
NAVSHIPYDBREM LTR
(260)(261-47)(NSC 203)
CVA 63/9610 N00406-70-C
0127 DTD 2 DEC 1969

SIZE	CODE IDENT NO.	DRAWING NO.	REV
A	90099	849A674	C

SCALE NONE | PHASE CODE 38-02 | SHEET 1 OF 19

REVISIONS

REV	SHT NO.	LN NO.	DESCRIPTION	DATE	APPROVED	
—	—	—	REF DWG 1JH5061 ECR 10420 ORIGINAL ISSUE		F	695
A	9 9 14 1 1'	32-33 31 38	41V2636 ECR 13021 DELETED DWG Nº WAS 8850-086 DWG Nº WAS 8850-086 ADDED NOTE FOR EAST PITTS DWG ADDED APP'L LTR [illegible] 1/6/70 S.A. 1-13-70	1/19/70	G.F.Ng	695
B	18	7	41V2636 ECR 14018 DWG Nº WAS 1326-002 EMS 4-[illegible]-70 [illegible] 5-5-70	5/7/70	G.F.Ng	695
C	15	10	41V2636 ECR 14025 ADDED [illegible] 6/24/70 JEO 7-8-70	7/22/70	G.F.Ng	695

SIZE	WESTINGHOUSE ELECTRIC CORPORATION SUNNYVALE, CALIFORNIA, 94088			
A	CODE IDENT NO. 90099	PHASE CODE 38-02	849A674	REV C
			SHEET 2	

LINE NO	TITLE	MANUFACTURER DRAWING NO	MANUFACTURER PC NO	FRAME INDEX NO.
1	BACK PRESSURE TRIP ASSY & DET	95J503	GR 2	
2	CAP CASTING	2JB1117		
3	BODY CASTING	2JB1118		
4	SPRING	1JA8923		
5				
6				
7				
8				
9				
10	BEARING COVER & END COVER	1JH3254	GR 1	
11	TAPER DOWEL	1JA1614		
12	BRG COVER & CYL END COVER	95J504		
13	SIGHT FLOW ASSY	1JA1630		
14	PIN-STRAIGHT	1JA1621		
15	COVER PLATE	1JA8937		
16	BEARING DEPTH PLATE	1JA1627		
17				
18				
19				
20				
21				
22	BEARING (H. S. PINION)	1JH3282	GR1&2	
23	PIN-STRAIGHT	1JA1634		
24	PIN-DOWEL	1JA1623		
25				
26				
27				
28				
29				
30	BEARING (L. S. GEAR)	1JD5510	GR 1	
31	PIN-DOWEL	1JA1623		
32	PIN-STRAIGHT	1JA1634		
33				
34				
35				
36				
37				
38	BEARING (L. S. GEAR)	1JD5511	GR 1	
39	PIN-DOWEL	1JA1623		
40	PIN-STRAIGHT	1JA1634		
41				
42				
43				
44				
45				

SIZE	WESTINGHOUSE ELECTRIC CORPORATION SUNNYVALE, CALIFORNIA, 94088			
A	CODE IDENT NO. 90099	PHASE CODE 38-02	849 A674	REV C
			SHEET 3	

LINE NO	TITLE	MANUFACTURER DRAWING NO	MANUFACTURER PC NO	FRAME INDEX NO.
1	BEARING (H. S. GEAR)	1JD5512	GR 1	
2	PIN-DOWEL	1JA1623		
3	PIN-STRAIGHT	1JA1634		
4				
5				
6				
7				
8				
9	BEARING (L.S. PINION)	1JD5513	GR 1	
10	PIN-DOWEL	1JA1623		
11	PIN-STRAIGHT	1JA1634		
12				
13				
14				
15				
16				
17	BEDPLATE	1JH3255	GR 1	
18	BOLT (SEMI-FITTED)	1JB6876		
19	BOLT (FITTED)	1JB1105		
20				
21				
22				
23				
24				
25	BLADING-ASSY-ROTOR-L.H.-(1ST STG 1ST ROTG)	1JD5531	GR 1	
26	BLADE	1JC6059		
27	SHROUD SEGMENT	1JC6069		
28				
29				
30				
31				
32				
33	BLADING-ASSY-ROTOR-L.H. (1ST STG 2ND ROTG)	1JD5532	GR 1	
34	BLADE	1JC6060		
35	SHROUD SEGMENT	1JC1418		
36				
37				
38				
39				
40				
41	BLADING STATIONARY ASSY-L. H. (1ST STG)	1JC6071	GR 1	
42	STATIONARY BLADE	1JC6061		
43	CAULKING PIECE	1JC5506		
44				
45				

SIZE	WESTINGHOUSE ELECTRIC CORPORATION SUNNYVALE, CALIFORNIA, 94088			
A	CODE IDENT NO. 90099	PHASE CODE 38-02	849 A674	REV C
			SHEET 4	

LINE NO	TITLE	MANUFACTURER DRAWING NO	MANUFACTURER PC NO	FRAME INDEX NO.
1	BLADING BAFFLES (1ST STG STAT.)	1JD5535	GR 1	
2				
3				
4				
5				
6				
7	BLADING-ASSY-ROTOR L.H. (2ND STG.)	1JD5531	GR 2	
8	BLADE	1JC6062		
9	SHROUD SEGMENT	1JC6069		
10				
11				
12				
13				
14				
15	BLADING ASSY-ROTOR-L.H. (3RD STG)	1JD5531	GR 3	
16	BLADE	1JC6063		
17	SHROUD SEGMENT	1JC6069		
18				
19				
20				
21				
22				
23	BLADING ASSY-ROTOR-L.H. (4TH STG)	1JD5531	GR 4	
24	BLADE	1JC6044		
25	SHROUD SEGMENT	1JC6069		
26				
27				
28				
29				
30				
31	BLADING ASSY-ROTOR-L.H. (5TH STG)	1JD5531	GR 5	
32	BLADE	1JC6062		
33	SHROUD SEGMENT	1JC6069		
34				
35				
36				
37				
38				
39	BLADING ASSY ROTOR L.H. (6TH STG)	1JD5533	GR 1	
40	BLADE	1JC6065		
41	BLADE LAST	1JC6066		
42	CAULKING PIECE	1JC5507		
43	SHROUD SEGMENT	1JC6069		
44				
45				

SIZE	WESTINGHOUSE ELECTRIC CORPORATION SUNNYVALE, CALIFORNIA, 94088			REV
A	CODE IDENT NO. 90099	PHASE CODE 38-02	849A674	C
			SHEET 5	

LINE NO	TITLE	MANUFACTURER DRAWING NO	MANUFACTURER PC NO	FRAME INDEX NO.
1	BLADE ASSY-ROTOR-L.H. (7TH STG)	1JD5534	GR 1	
2	BLADE	1JC6067		
3	BLADE LAST	1JC6068		
4	CAULKING PIECE	1JC5507		
5	SHROUD SEGMENT	1JC6069		
6				
7				
8				
9				
10				
11	BLADE SHROUD MACHINING (ROTOR)	1JD1445	1	
12				
13				
14				
15				
16				
17	CYLINDER BASE INLET END	1JH3256	GR 1	
18	TAPER DOWEL	1JA5628		
19	COVER PLATE	1JA8935		
20	ORIFICE PLUG	1JA1618		
21	SUPPORT	1JB6921		
22	PIN STRAIGHT	1JA1634		
23	BUSHING	1JH1503		
24	GROOVE	1JA8962	REF	
25	GROOVE	1JA8963	REF	
26	GROOVE	1JA8966	REF	
27				
28				
29				
30				
31				
32	CYLINDER BASE FAB EXHAUST END	1JH3257	GR 1	
33				
34				
35				
36				
37				
38	CYLINDER BASE MACH. EXHAUST END	1JH3258	GR 1	
39	GROOVE	1JA8962	REF	
40	GROOVE	1JA8963	REF	
41	EXPANSION JOINT	1JD5564		
42				
43				
44				
45				

SIZE	WESTINGHOUSE ELECTRIC CORPORATION SUNNYVALE, CALIFORNIA, 94088			
A	CODE IDENT NO. 90099	PHASE CODE 38-D2	849A674	REV C
			SHEET 6	

LINE NO	TITLE	MANUFACTURER DRAWING NO	MANUFACTURER PC NO	FRAME INDEX NO.
1	CYLINDER COVER INLET END	1JH3259	GR 1	
2	PATCH PLUG	1JA1615		
3	BOLT-STUD	1JA1617		
4	STUD-SQ HD	1JC6340		
5	EXTENSION NUT	1JA1619		
6	TAPER DOWEL	1JA5628		
7	TAPER DOWEL	1JA1614		
8	GLAND COVER	1JC5516		
9	GROOVE	1JA8962	REF	
10	GROOVE	1JA8963	REF	
11				
12	STUD-GUIDE	1JA5440		
13	GROOVE	1JA8966	REF	
14	GROOVE	1JA8963	REF	
15	EXTENSION NUT	2JB941		
16				
17				
18				
19				
20				
21	CYLINDER COVER FAB EXHAUST END	1JH3260	GR 1	
22				
23				
24				
25				
26				
27	CYLINDER COVER MACH (EXH. END)	1JH3261	GR 1	
28	STUD-GUIDE	1JA5440		
29	STUD-SQ HD	1JC6342		
30	EXTENSION NUT	2JB941		
31	GLAND COVER	1JC5517		
32	GROOVE	1JA8962	REF	
33	GROOVE	1JA8963	REF	
34				
35	TAPER DOWEL	1JA1614		
36				
37				
38				
39				
40				
41	DUMMY SEAL RING ASSY	1JC5518	GR 1	
42	SEAL RING	1JB6926		
43	SPRING	1JA8965		
44				
45				

SIZE	WESTINGHOUSE ELECTRIC CORPORATION SUNNYVALE, CALIFORNIA, 94088			REV
A	CODE IDENT NO. 90099	PHASE CODE 38-02	849A674	C
			SHEET 7	

LINE NO	TITLE	MANUFACTURER DRAWING NO	MANUFACTURER PC NO	FRAME INDEX NO.
1	GAGES AND GAGEBOARD	905J227	GR 1	
2	NAMEPLATES	924B552		
3	METER-INDICATING	2JB1059		
4	TACHOMETER EQUIPMENT	1JH7378		
5				
6				
7				
8				
9				
10	GEARS & PINIONS	1JH3262	GR 1	
11	BOLT-FITTED	1JB1139		
12				
13				
14				
15				
16				
17	GEAR HOUSING BASE FAB	905J229	GR 1	
18	SIGHT FLOW	1JC1391		
19				
20				
21				
22				
23				
24	GEAR HOUSING BASE MACH.	905J230	GR 1	
25	BOLT-SEMI FITTED	1JB6876		
26	SIGHT FLOW	1JC1391		
27	OIL LEVEL INDICATOR	1JB6875		
28	COVER - CLEAN OUT	1JB6920		
29	GEAR CASE BASE & BEDPLATE MACH.	95J531		
30	ORIFICE PLUG	1JA1620		
31	COVER-HAND HOLE	904A632		
32				
33				
34				
35				
36				
37	GEAR HOUSING COVER FAB.	1JH3265	GR 1	
38	INSPECTION HOLE FLANGE	1JC1380		
39				
40				
41				
42				
43				
44				
45				

SIZE	WESTINGHOUSE ELECTRIC CORPORATION SUNNYVALE, CALIFORNIA, 94088			
A	CODE IDENT NO. 90099	PHASE CODE 38-02	849A674	REV C
			SHEET 8	

LINE NO	TITLE	MANUFACTURER DRAWING NO	MANUFACTURER PC NO	FRAME INDEX NO.
1	GEAR HOUSING COVER MACH & OIL SEAL RINGS	1JH3266	GR 1	
2	OIL SEAL RINGS	1JH3287		
3	INSPECTION HOLE COVER	1JD1417		
4	PIN	1JA1621		
5				
6	OIL VAPOR CONDENSER	40J547		
7	BEARING CAP	1JA8956		
8	COUPLING GUARD	1JB6909		
9	END COVER	1JA8890		
10	COVER PLATE	1JA8887		
11	BEARING DEPTH PLATE	1JA1627		
12	COVER PLATE	1JA8937		
13	STUD-SQ HD	1JC6342		
14	TAPER DOWEL	1JA1614		
15				
16				
17				
18				
19				
20	GLAND SEAL RING ASSEMBLY	1JD1447	GR 1	
21	SEAL RING	1JB6944		
22	SPRING	1JA8961		
23				
24				
25				
26				
27				
28	GOVERNOR ASSEMBLY MODIFICATION KIT	715J983	GR 2	
29	ADAPTER PLATE	524C071		
30	BRACKET	715J977		
31	PGD GOVERNOR (WOODWARD)	9987-977		
32	~~GOVERNOR-DIM. OUTLINE (WOODWARD)~~	~~9987-058~~		
33	~~PGD GOVERNOR PARTS LIST (WOODWARD)~~	~~PL8830-086~~		
34	SHAFT HOUSING	524C078		
35	GEAR DRIVEN	379D732		
36	WASHER-THRUST	1JA8955		
37	WASHER	1JA5459		
38	STUD	924B757		
39	KEY	1JA1637		
40	COVER	524C077		
41	GOVERNOR & SPEED CHANGER DETS (BUSHING)	95J537		
42				
43				
44				
45				

SIZE	WESTINGHOUSE ELECTRIC CORPORATION SUNNYVALE, CALIFORNIA, 94088			
A	CODE IDENT NO. 90099	PHASE CODE 38-02	849A674	REV C
			SHEET 9	

LINE NO	TITLE	MANUFACTURER DRAWING NO	MANUFACTURER PC NO	FRAME INDEX NO.
1	GOVERNOR & OIL PUMP DRIVE ASSY	1JH3271	GR 1	
2	PUMP SUPPORT COMPLETE	1JH1103		
3	DRIVE SHAFT	1JC1411		
4	COUPLING	1JC1412		
5	DRIVE GEAR-MAIN	1JC5538		
6	BEARING	1JB6901		
7	BEARING	1JB6896		
8	SPIRAL BEVEL GEAR & PINION	1JB6903		
9	THRUST WASHER	1JA5443		
10	SPACER	1JA5442		
11	KEYS-SOLID	1JA8927		
12				
13				
14				
15				
16				
17	HAND OIL PUMP (GIMPEL)	S-368	GR 1	
18	HAND OIL PUMP (HANDLE) (GIMPEL)	S-115		
19	HAND OIL PUMP (PLUG) (GIMPEL)	S-240		
20				
21				
22				
23				
24				
25	INSULATION, ATTACHMENTS & NAMEPLATES	1JH3269	GR 1	
26	ATTACHMENT, RAIL & HOOK	1JA5636		
27	IDENTIFICATION PLATE	1JA5634		
28	NAMEPLATE (COMBINED UNIT)	1JA5469		
29	NAMEPLATE (STEAM SEAL MANIFOLD)	1JA5633		
30	INSULATION, ATTCH. & NAMEPLATES	1JH2183		
31	LACING DEVICES	1JB6883		
32				
33				
34				
35	LONGITUDINAL ASSY - TURB & GEAR	759J297	REF	
36				
37				
38				
39				
40	LOW OIL PRESSURE CONTACT MAKER (DETROIT LUBE CO.)	TS-1214	GR 1	
41				
42				
43				
44				
45	LUBE OIL PUMP ASSY & DETAILS (GIMPEL)	S-219	GR 1	

LINE NO	TITLE	MANUFACTURER DRAWING NO	MANUFACTURER PC NO	FRAME INDEX NO.
1	MACHINERY MFG VARIATION	912C132	REF	
2	BEARING COVER & END COVER	1JH3254	REF	
3	CYLINDER BASE INLET END	1JH3256	REF	
4	BRG COVER & CYL END COVER	95J504	REF	
5				
6				
7	NOZZLE BLOCK L.H. (1ST STG)	1JD1446	GR 1	
8	NOZZLE PASSAGE MACH	1JC6082	REF	
9	NOZZLE PASSAGE MACH	1JC6083	REF	
10	BOLT-SOC HD CAP	1JB6932		
11	BOLT-RETAINER	1JB1137		
12	SEAL STRIP	1JC5508		
13	LOCK STRIP	1JC5505		
14	CAULKING PIECE	1JA9121		
15				
16				
17				
18				
19				
20	NOZZLE DIAPHRAGM L.H. (2ND STG)	1JF117	GR 1	
21	DIAPHRAGM HALF SEGMENT	1JC6051		
22	DIAPHRAGM HALF-BLANK SEGMENT	1JC6890		
23	NOZZLE VANE	1JB6937		
24	INNER & OUTER SHROUD	1JC6057		
25	DIAPHRAGM KEY	1JA5642		
26	CRUSHING PIN	1JA5641		
27	SEAL STRIP	1JC5508		
28	LOCK STRIP	1JC5505		
29	SEAL RING	1JB6934		
30	SPRING	1JA8970		
31				
32				
33				
34				
35				
36	NOZZLE DIAPHRAGM L.H. (3RD STG)	1JF118	GR 1	
37	DIAPHRAGM HALF SEGMENT	1JC6052		
38	DIAPHRAGM HALF BLANK SEGMENT	1JB6890		
39	NOZZLE VANE	1JB6938		
40	OUTER SHROUD TAPERED	1JC6058		
41	INNER & OUTER SHROUD	1JC6057		
42	DIAPHRAGM KEY	1JA5642		
43	CRUSHING PIN	1JA5641		
44	SEAL STRIP	1JC5508		
45	NOZZLE DIAPH. L.H. (3RD STG) CONT ON SHT 12			

LINE NO	TITLE	MANUFACTURER DRAWING NO	MANUFACTURER PC NO	FRAME INDEX NO.
1	NOZZLE DIAPH. L. H. (3RD STG) CONT FR. SHT 11			
2	LOCK STRIP	1JC5505		
3	SEAL RING	1JB6935		
4	SPRING	1JA8970		
5				
6				
7				
8				
9				
10	NOZZLE DIAPHRAGM L.H. (4TH STG)	1JF119	GR 1	
11	DIAPHRAGM HALF SEGMENT	1JC6053		
12	DIAPHRAGM HALF BLAND SEGMENT	1JB6890		
13	NOZZLE VANE	1JB6939		
14	OUTER SHROUD TAPERED	1JC6058		
15	INNER & OUTER SHROUD	1JC6057		
16	DIAPHRAGM KEY	1JA5642		
17	CRUSHING PIN	1JA5641		
18	SEAL STRIP	1JC5508		
19	LOCK STRIP	1JC5505		
20	SEAL RING	1JB6935		
21	SPRING	1JA8970		
22				
23				
24				
25				
26				
27	NOZZLE DIAPHRAGM L.H. (5TH STG)	1JF120	GR 1	
28	OUTER RING	1JC5513		
29	INNER RING	1JC5511		
30	NOZZLE VANE	1JB6937		
31	INNER & OUTER SHROUD	1JC6057		
32	DIAPHRAGM KEY	1JA5642		
33	CRUSHING PIN	1JA5641		
34	SEAL STRIP	1JC5508		
35	LOCK STRIP	1JC5505		
36	SEAL RING	1JB6936		
37	SPRING	1JA8970		
38				
39				
40				
41				
42				
43				
44				
45				

LINE NO	TITLE	MANUFACTURER DRAWING NO	MANUFACTURER PC NO	FRAME INDEX NO.
1	NOZZLE DIAPHRAGM L.H. (6TH STG)	1JF121	GR 1	
2	OUTER RING SEGMENT	1JC6054		
3	INNER RING SEGMENT	1JC6055		
4	NOZZLE VANE	1JB6940		
5	OUTER SHROUD TAPERED	1JC6058		
6	INNER SHROUD TAPERED	1JC6070		
7	DIAPHRAGM KEY	1JA5642		
8	CRUSHING PIN	1JA5641		
9	SEAL RING	1JB6935		
10	SPRING	1JA8970		
11	SEAL STRIP	1JC5508		
12	LOCK STRIP	1JC5505		
13				
14				
15				
16				
17				
18	NOZZLE DIAPHRAGM L.H. (7TH STG)	1JF122	GR 1	
19	OUTER RING SEGMENT	1JC6054		
20	INNER RING SEGMENT	1JC6056		
21	NOZZLE VANE	1JB6941		
22	OUTER SHROUD TAPERED	1JC6058		
23	INNER & OUTER SHROUD	1JC6057		
24	DIAPHRAGM KEY	1JA5642		
25	CRUSHING PIN	1JA5641		
26	SEAL RING	1JB6935		
27	SPRING	1JA8970		
28	SEAL STRIP	1JC5508		
29	LOCK STRIP	1JC5505		
30				
31				
32				
33				
34				
35	OIL SYSTEMS & CONTROL DIAGRAM	759J299	REF	
36				
37				
38				
39				
40				
41	OUTLINE & CERTIFICATION DATA - T.G. SET	759J298	REF	
42				
43				
44				
45				

LINE NO	TITLE		MANUFACTURER DRAWING NO	MANUFACTURER PC NO	FRAME INDEX NO.
1	OVERSPEED & MANUAL TRIP		1JH3272	GR 1	
2	BODY (UPPER) COMPLETE		1JC5514		
3	PIN-STRAIGHT		1JA1621		
4					
5	BODY (LOWER)		1JC5515		
6	BODY-ROTATING		1JC5544		
7	VALVE SEAT		1JA8959		
8	OVERSPEED & MANUAL TRIP		95J561		
9	PIN-LINKAGE		1JA5473		
10	AUTO STOP GOVERNOR DETAILS (SPRING)		1JH2154		
11	PIN-STRAIGHT		1JA1621		
12					
13					
14					
15					
16					
17	PIPING-OIL		615F696	GR 1	
18	FLANGE-SOC-RAISED FACE		1JB1124		
19	ORIFICE PLATE		904A528		
20	FLANGE-SLIP ON-RAISED FACE		1JA1635		
21	METER INDICATING		2JB1059		
22	STUD		924B757		
23	ORIFICE		1JA1641		
24	ADAPTER		523C228		
25	SWIVEL NUT-ELBOW 45°		386B124		
26	SIGHT FLOW		1JD1420		
27	SCREW, HEX HD		522C504		
28	CONNECTOR		1JA1633		
29	ADAPTER-THDEMALE		1JA5470		
30	ADAPTER-THD-FEMALE		1JA5605		
31	OIL PIPING DETAILS		1JH3284		
32	FILTER BRACKET DETAILS		1JC6270		
33	THERMOCOUPLE ASSEMBLY		1JC9056		
34	COMPRESSION CONNECTORS		1JD1438		
35	THERMOCOUPLE ADAPTER		1JA9367		
36	THERMOCOUPLE		2JB1060		
37					
38	GOVERNOR	(WOODWARD)	9987-977	REF	
39	VALVE OPERATOR-STEAM	(WOODWARD)	9987-968	REF	
40	FILTER ASSEMBLY, OIL, DUPLEX	(AIR MAZE)	D3W181088		
41	GASKET, SPIRAL WOUND		522C011		
42	SOCKOLET		363B405		
43	ADAPTER		379D445		
44	TUBING CLAMP		2JB978		
45	PIPING OIL CONT ON SHT 15				

SIZE	WESTINGHOUSE ELECTRIC CORPORATION SUNNYVALE, CALIFORNIA, 94088			
A	CODE IDENT NO. 90099	PHASE CODE 38-02	849A674	REV C
			SHEET 14	

LINE NO	TITLE	MANUFACTURER DRAWING NO	MANUFACTURER PC NO	FRAME INDEX NO.
1	PIPING OIL CONT FR SHT 14			
2	CONNECTOR	386B119		
3	FLANGE-SOC	522C103		
4	FLANGE-SIDE OUTLET	935B338		
5	TEE	522C225		
6	MOUNTING BRACKET DUPLEX FILTER	524C619		
7	ACCUMULATOR ASSY	302D314		
8	SPRING	387B037		
9	SPRING	387B038		
10	DECAL STICKER	385B928		
11	SCREW-HEX HD	522C506		
12				
13				
14				
15				
16				
17	PLAN LIST - T.G. SET	849A674	REF	
18				
19				
20				
21				
22				
23	RELIEF VALVE ASSY (GIMPEL)	S-217	GR 1	
24	RELIEF VALVE DETAILS (GIMPEL)	S-178		
25				
26				
27				
28				
29				
30	REPAIR PARTS AND TOOLS LIST	905J233	REF	
31	WRENCHES AND TOOLS	1JH3289		
32	VALVE SETTING FIXTURE	1JB6950		
33	PIN-STRAIGHT	1JA1621		
34	DIAL INDICATOR POST	1JA8969		
35	BOLT STRETCH MEAS. SLEEVE	1JA8920		
36	BOLT STRETCH MEAS. ROD	1JA8921		
37	WRENCH (SPANNER)	1JA1659		
38	BUSHING EXTRACTOR COLLAR	1JA8925		
39	BUSHING EXTRACTOR SUPPORT	1JA8926		
40	MICROMETER DEPTH GAUGE	1JA1651		
41	DISMANTLING JIG (OVERSPEED TRIP)	1JA8998		
42	WRENCH (THERMOCOUPLE FITTINGS)	1JA9380		
43	WRENCH (TACHOMETER)	924B553		
44	WRENCH ADAPTER	924B694		
45	REPAIR PARTS AND TOOLS LIST CONT ON SHT 16			

LINE NO	TITLE	MANUFACTURER DRAWING NO	MANUFACTURER PC NO	FRAME INDEX NO.
1	REPAIR PARTS AND TOOLS LIST CONT FR. SHT 15			
2	ROTOR LIFTING GEAR AND GUIDES	1JD5515		
3	ROTOR LIFTING BAR	1JD1433		
4	SLING	1JB6897		
5	ROTOR GUIDES	1JH3288		
6	BUSHING	1JA8957		
7				
8	STRAIGHT DOWEL	1JA5450		
9	ROTOR LIFTING DEVICE	1JC5525		
10	ROTOR LIFTING DEVICE	1JC1410		
11				
12				
13				
14				
15				
16	ROTOR	1JH3275	GR 1	
17	KEY-SOLID	1JA1637		
18	ROTOR BLADE GROOVE	1JC1413	REF	
19	ROTOR BLADE GROOVE	1JB6942	REF	
20	ROTOR BLADE GROOVE	1JB6943	REF	
21				
22				
23				
24	ROTOR CLEARANCES	1JH1230	REF	
25				
26				
27				
28	SPINDLE POSITION INDICATOR	95J565	GR 1	
29				
30				
31				
32	STEAM CHEST COVER, VALVES & LINKAGE	715J994	GR 1	
33	COVER COMPLETE	1JD2265		
34	VALVE SEAT	1JB1127		
35	VALVE	1JB6925		
36	STEM	1JB6928		
37	NUT, EXTENSION	1JA8931		
38	TAPER DOWEL	1JA5628		
39	BUSHING	1JB1140		
40	WASHER-SPHERICAL-MALE	1JA5471		
41	WASHER-SPHERICAL-FEMALE	1JA5472		
42	SCREW	1JA8884		
43	BUSHING (UPPER)	1JB6899		
44	BUSHING (LOWER)	1JB6882		
45	STEAM CHEST, VALVES & LINK. CONT. ON SHT 17			

LINE NO	TITLE	MANUFACTURER DRAWING NO	MANUFACTURER PC NO	FRAME INDEX NO.
1	STEAM CHEST COVER, VALVES & LINK, CONT FR, SHT 15			
2	PIN, GUIDE	1JA5621		
3	RING, EXPANSION	1JB1142		
4	STUD	1JB6923		
5				
6				
7				
8				
9				
10	STEAM GLAND & DRAIN PIPING ASSY	1JH3286	GR 1	
11				
12				
13				
14				
15				
16	STEAM SEAL MANIFOLD ASSY (GIMPEL)	S-218	GR 1	
17	STEAM SEAL MANF. DET (GIMPEL)	S-203		
18	STEAM SEAL MANF DET (GIMPEL)	S-238		
19				
20				
21				
22				
23				
24	STEAM STRAINER	1JH3280	GR 1	
25	STUD	1JB6924		
26	NUT-HEX	1JB6922		
27	WASHER-SPHERICAL-MALE	1JA5471		
28	WASHER-SPHERICAL-FEMALE	1JA5472		
29				
30				
31				
32				
33				
34	STEAM VALVE OPERATOR & LINKAGE ASSY	715J993	GR 1	
35	LEVER	524C092		
36	LINK	1JA5620		
37	BUSHING, PLAIN	1JA5627		
38	TRUNNION	620C032		
39	TRUNNION	1JA6898		
40	PIN, DOUBLE END, SHOULDER	1JA5624		
41	WASHER, LOCKING	1JA5626		
42	PIN	1JA5625		
43	SUPPORT	302D293		
44	STEAM VALVE OPERATOR (WOODWARD)	9987-968		
45	STEAM VALVE OPER & LINK ASSY CONT ON SHT 18			

SIZE	WESTINGHOUSE ELECTRIC CORPORATION SUNNYVALE, CALIFORNIA, 94088			
A	CODE IDENT NO. 90099	PHASE CODE 38-02	849A674	REV C
			SHEET 17	

LINE NO	TITLE	MANUFACTURER DRAWING NO	MANUFACTURER PC NO	FRAME INDEX NO.
1	STEAM VALVE OPER. & LINK ASSY CONT FR. SHT 17			
2	START SEQUENCE VALVE	715J450		
3	PIN	1JA1634		
4	SPRING	360B836		
5	START SEQ VALVE STARTING INSTRUCTIONS	385B040		
6				
7	FLOW CONTROL VALVE (WOODWARD)	9987-807		
8				
9				
10				
11				
12				
13	STRAINER-OIL COOLER ASSY (ANDALE)	N-5074	GR 1	
14	STRAINER-OIL COOLER-L/M (ANDALE)	FN-5074		
15	STRAINER DETAILS (ANDALE)	N-5075		
16	COOLER DETAILS (ANDALE)	N-5076		
17	PRESSURE CONTROL VALVE (ANDALE)	N-5077		
18				
19	STRAINER-OIL COOLER ASSY AND ONBOARD REPAIR PARTS —			
20	PERFORMANCE DATA (ANDALE)	DN-5216	REF	
21				
22				
23				
24				
25				
26	TACHOMETER MOUNTING ARRANGEMENT	909D002	GR 1	
27	SHAFT	924B554		
28	OIL BAFFLE	904A533		
29	ADAPTER	924B555		
30	TACHOMETER EQUIP (NETWORK BOX)	1JH7378		
31				
32				
33				
34				
35				
36	THROTTLE VALVE ASSEMBLY	1JH3347	GR 1	
37	COVER (THROTTLE VALVE)	909D029		
38	BODY	1JD5537		
39	COVER	1JC9194		
40	SHAFT	1JA9308		
41	PISTON	1JC6336		
42	PISTON RING-COMPRESSION	2JB1115		
43	THROTTLE VALVE DETAILS	1JH3281		
44	SPRING-COMPRESSION	904A543		
45	THROTTLE VALVE ASSY CONT ON SHT 19			

SIZE	WESTINGHOUSE ELECTRIC CORPORATION SUNNYVALE, CALIFORNIA, 94088			
A	CODE IDENT NO. 90099	PHASE CODE 38-02	849A674	REV C
			SHEET 18	

LINE NO	TITLE	MANUFACTURER DRAWING NO	MANUFACTURER PC NO	FRAME INDEX NO.
1	THROTTLE VALVE ASSY CONT FR SHT 18			
2	SLEEVE	2JB977		
3	SPRING	1JA9306		
4	RELAY	1JA9316		
5	SPACER	1JA9314		
6	VALVE STEM	924B501		
7	BUSHING	1JC9084		
8	VALVE SEAT	1JB1127		
9	EXPANSION RING	1JB1142		
10	STUD-SQ HD	1JC6341		
11	WASHER-SPHERICAL-MALE	1JA5471		
12	WASHER-SPHERICAL-FEMALE	1JA5472		
13	NUT-HEX	1JB6927		
14	CAUTION PLATE	1JA9307		
15				
16				
17				
18				
19				
20	THRUST AND JOURNAL BEARING ASSEMBLY	1JD2307	GR 1	
21	BEARING CASING	909D009		
22	PIN DOWEL	1JA1623		
23				
24	BASE RING	1JC9242		
25	JOURNAL SHOE	1JC9232		
26	PIN-SPECIAL	904A588		
27	COLLAR (THRUST BEARING)	924B562		
28	THRUST SHOE	924B447		
29	SHOE SUPPORT	904A450		
30				
31	LEVELING PLATE INNER	924B560		
32	LEVELING PLATE OUTER	924B561		
33	LEVELING PLATE SET SCREW	904A452		
34	LEVELING PLATE DOWEL	904A451		
35	FILLER RING (INNER & OUTER)	1JA9428		
36	OIL SEAL RING	904A459		
37	OIL CONTROL RING - COMPLETE	1JC9187		
38				
39				
40				
41				
42				
43				
44				
45				

MEMORANDUM

MEMORANDUM

MEMORANDUM

MEMORANDUM

MEMORANDUM

MEMORANDUM

MEMORANDUM

MEMORANDUM

MEMORANDUM

MEMORANDUM

RETURN TO
WESTINGHOUSE RECORDS CE
401 EAST HENDY AVENUE
P. O. BOX 3499 (M/S SD-30)
SUNNYVALE, CA. 94088-3499

BOX NO. SV6180 LOCATION 100604

OVERBLOWN DOCUMENTS

WITHIN THE CONTENT OF THIS EXHIBIT ARE NOT IMAGED