INDEX 19ST-3

OUTLINE DRAWING **5010-1**

November, 1970

AISE TYPE WB BRAKES

(All dimensions in inches)

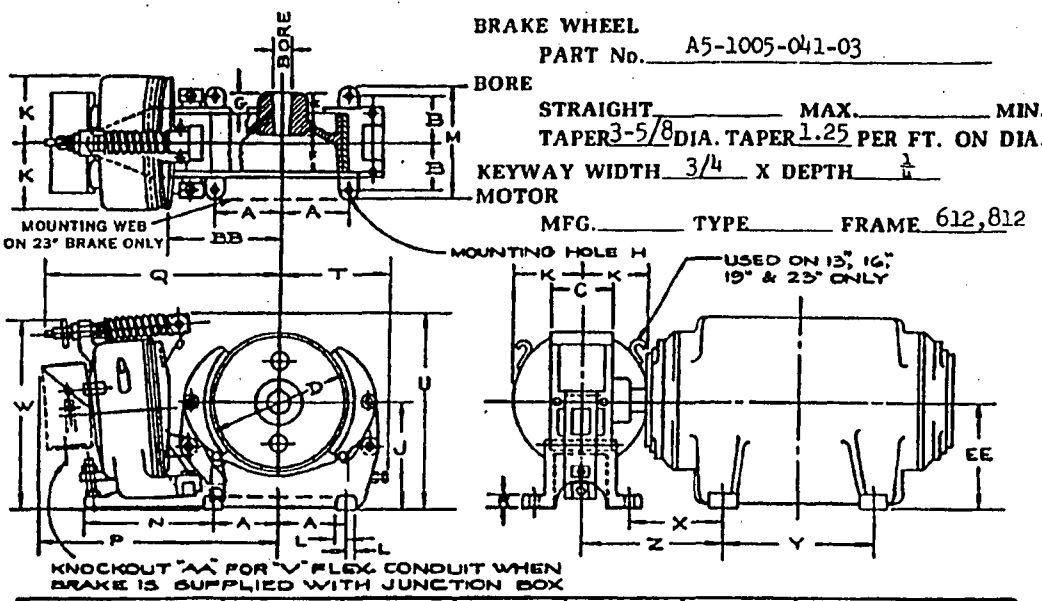

BRAKE WHEEL
PART No. A5-1005-041-03

BORE
STRAIGHT _____ MAX. _____ MIN.
TAPER 3-5/8 DIA. TAPER 1.25 PER FT. ON DIA.
KEYWAY WIDTH 3/4 X DEPTH 1/4

MOTOR
MFG. _____ TYPE _____ FRAME 612,812

SIZE BRAKE	E	F	G	X	Y	Z	EE	
19"	5	6-7/8	3-1/8	7-3/4	28½	14¼	13-3/8	

SIZE BRAKE	A	B	C	D	H DIA.	J	K	L	M	N	P	Q	R	T	U	V	W	AA	BB
8"	3.25	2.88	3.25	8	.69	7	4.63	.81	7.38	11.31	17	18	.62	6.38	13.50	1	13.50	1.38	7.13
10"	4	3.13	3.75	10	.69	8.38	5.38	.88	8	12.25	19.13	20.13	.88	7.38	16.38	1.25	15.13	1.75	8.50
13"	5.75	4.50	5.75	13	.81	9.88	6.63	1	11	14	24	25.13	1	10	20.13	1.50	19.19	2	11
16"	7.50	5.38	6.75	16	1.06	12.13	7.75	1.13	13	15	26.88	27.50	1.25	11.50	22.75	2	22	2.50	12.63
19"	9.25	6.50	8.75	19	1.06	13.25	9.25	1.25	15.50	17.38	31.75	32.75	1.63	13.31	26.50	2.50	25.50	3	15.13
23"	11.75	8	11.25	23	1.31	15.88	10.94	1.50	19	19.63	36.13	38.50	1.63	17.25	31.63	3	30.50	3.63	18.75

Drive..... Winding.....
Certified Correct on..... H. P.....
Purch..... P. O.....
User..... U. O.....
Square D S. O..... Engr.....

C. A. SCHURR, Chief Engineer

Supersedes OD 5010-1 Dated 3-70

SQUARE D COMPANY

SQD HCK00066