AMERICAN SMELTING AND REFINING COMPANY
DEPARTMENT OF ENVIRONMENTAL SCIENCES
3422 SOUTH — 700 WEST, SALT LAKE CITY, UTAH 84119

M. O. VARNER
Manager

October 31, 1974

PLAINTIFF'S EXHIBIT

ASA-642

Mr. M. O. Varner
Building

Proposed Amendments to National
Emission Standards for Asbestos

I have attached copies of the October 25, 1974, Federal Register which contains proposed amendments for hazardous air pollutants, including asbestos. The proposed amendments appear to have an impact on ASARCO operations.

1: There are a number of requirements that apply to the demolition or renovation of a tank, furnace, or structural member that is insulated or fire-proofed with "friable" asbestos material. The proposed requirements are:

a: Written notice of intention to demolish or renovate.

b: Control procedures to prevent emissions of particulate asbestos material to outside air.

c: A prohibition on visible emissions.

d: Proper waste disposal of the asbestos-containing materials.

2: A ban on molded insulating and wet-applied insulating materials (which are "friable" after drying) containing commercial asbestos. The insulating cement or "lagging" used at the various smelters would appear to fall within this category.

3: A requirement of no visible emissions to the outside air from the collection, processing, packaging, transporting, or deposition of asbestos-containing waste which is generated by asbestos fabricating sources. This requirement may affect the proposed (or installed) local ventilation systems at various carpentry shops, such as Tacoma, Corpus Christi, and Globe, where transite and other asbestos-containing materials are used.

4: A number of requirements for waste disposal sites where asbestos-containing waste has been deposited, including warning signs, fencing, use of dust suppression agents, a cover of compacted material. These requirements have an obvious application to the open dump at the CAPCO Van Buren property.

Comments on these proposed amendments should be submitted to the EPA no later than December 5, 1974.

James P. Sieverson
Environmental Specialist

JPS/nrh

cc: KWNelson

FRIDAY, OCTOBER 25, 1974
WASHINGTON, D.C.
Volume 39 ▫ Number 208
PART II

THE NATIONAL ARCHIVES OF THE UNITED STATES • 1934 •

ENVIRONMENTAL PROTECTION AGENCY

▫

ASBESTOS AND MERCURY

Proposed Amendments to National Emission Standards

Federal Register

ENVIRONMENTAL PROTECTION AGENCY

[40 CFR Part 61]

[FRL 276-1]

ASBESTOS AND MERCURY

Proposed Amendments to National Emission Standards for Hazardous Air Pollutants

On April 6, 1973 (38 FR 8820), pursuant to section 112 of the Clean Air Act, as amended, the Administrator promulgated national emission standards for the hazardous air pollutants asbestos, beryllium, and mercury. Clarifying amendments to the original standards were promulgated on May 3, 1974 (39 FR 15396), to advise the public how the regulations are being interpreted in Agency enforcement activities. The Administrator proposes herein amendments to the standards for asbestos and mercury. The Administrator also proposes amendments to Appendix B, Test Methods, of this part. In accordance with section 117 of the Act, publication of these proposed amendments was preceded by consultation with appropriate advisory committees, independent experts, and Federal departments and agencies.

Interested persons may participate in this rulemaking by submitting written comments (in triplicate) to the Emission Standards and Engineering Division, Environmental Protection Agency, Research Triangle Park, North Carolina 27711, Attention: Mr. Don R. Goodwin. The Administrator will welcome comments on all aspects of the proposed regulations, including economic and technological issues, and on the proposed test method. All relevant comments received not later than December 5, 1974, will be considered. Comments received will be available for public inspection at the Office of Public Affairs, 401 M Street SW., Washington, D.C. 20460. Background information materials explaining the action taken have been published in a report entitled Background Information on National Emission Standards for Hazardous Air Pollutants, Proposed Amendments to Standards for Asbestos and Mercury (EPA-450/2-74-009). This report is too voluminous to publish in the FEDERAL REGISTER; copies are available on request from the Emission Standards and Engineering Division, Research Triangle Park, North Carolina 27711, Attention: Mr. Don R. Goodwin. The information contained in this report is briefly discussed below.

The Environmental Defense Fund, et al., filed on May 7, 1973 a Petition for Review of the national emission standards for hazardous air pollutants promulgated on April 6, 1973. As a result of this action, the Agency investigated the need for extending coverage of the standards to additional sources of asbestos and mercury in order to protect public health with an ample margin of safety. In addition, experience by the Agency in enforcing the standards promulgated on April 6, 1973, revealed that several major sources of asbestos emissions are not covered and some portions of the asbestos standard need clarifying. The Administrator believes that the clarifications proposed herein are sufficiently substantive to warrant proposal for public comment, rather than inclusion in the clarifying changes which were promulgated, without prior proposal, on May 3, 1974.

ASBESTOS

Manufacturing. It is the Administrator's judgment that the manufacture of shotgun shells and the manufacture of asphalt concrete are major sources of asbestos which should be added to the list of nine manufacturing operations covered by the promulgated asbestos standard. The asbestos emissions from the two additional manufacturing operations will be limited to the same extent as those of the other nine manufacturing operations: Visible emissions to the outside air are prohibited, but an option of using specified air-cleaning methods is provided.

Fabrication. Fabrication operations were excluded from the promulgated standard because it was thought that only new construction sites were major fabrication sources of asbestos emissions and these were thought to be adequately controlled by Occupational Safety and Health Administration (OSHA) regulations. The petition of the Environmental Defense Fund, et al., questioned the exclusion of fabrication operations from the promulgated standard. In response to these questions, the Agency conducted further investigations of the various fabrication operations involving asbestos products. These investigations showed that asbestos products other than insulating products are field-fabricated to only a limited extent and that the Agency's previous reliance on OSHA regulations to cover field fabrication is unnecessary. However, the investigation showed that fabrication of some asbestos products in central shops is a major source of asbestos emissions.

It is the judgment of the Administrator that the only field-fabricating operation for asbestos products which is a major source is the installation of molded asbestos insulating materials. The amendment proposed herein prohibits the installation of the following materials that contain commercial asbestos: Molded insulating materials which are friable and wet-applied insulating materials which are friable after drying.

A wide variety of asbestos insulation products has been used for thermal insulation. Many, though not all, of the products are friable and produce significant quantities of asbestos-containing dust during cutting to fit contours of specific equipment and during installation. One common type of friable insulation is molded, asbestos-reinforced blocks, sheets, and semi-irregular sections for pipe insulation. Some powdered asbestos cement products which are mixed into a slurry and wet to insulate extremely irregular shapes are also friable after drying.

Insulating products which contain no commercial asbestos have been developed for many applications, largely because of the known occupational hazards of installing products such as the common types of molded asbestos pipe insulation. Friable, molded thermal insulation which contains asbestos is no longer manufactured in the United States, and asbestos-free products are now available for the complete range of temperature requirements. Fiberglass is used at lower temperatures, and ceramic fibers are used for extremely high temperature requirements. Asbestos-free substitutes are also available for powdered asbestos cement insulation.

While control methods are available for the installation of friable asbestos insulating materials and for their removal during demolition and renovation, the methods permit some asbestos emissions during these operations and during the disposal of the accompanying waste materials. The availability of an economical and more effective control method, i.e., the use of asbestos-free insulating products, together with the uncertainty as to the nature of the dose-response curve of asbestos in man, indicates that it would be prudent to prohibit the use of friable asbestos insulating products. Even though the use of these asbestos products in the United States has been largely discontinued, a regulation is necessary to stop the use that still exists and to ensure that such products are not used again in the future.

Asbestos is used in numerous manufactured products, and many of the products undergo some type of fabrication prior to application in an end use. Some fabrication involves cutting operations which do not generate large quantities of asbestos emissions, for example, the cutting to size of vinyl-asbestos floor tile during installation. In other instances, processing which could be performed at fabrication sites is incorporated into manufacturing operations; this type of processing is already covered as part of the corresponding manufacturing operation by the standard promulgated on April 6, 1973. Examples of this practice are the grinding of molded asbestos brake linings when it is done at the site of manufacture, and the cutting and sizing of asbestos cement sheets for construction of individual facilities performed as part of the manufacturing process before the product has received a hardened condition.

On the basis of information obtained during investigation of the various fabrication operations involving asbestos products, the Administrator has determined that fabrication of the following materials in central locations [illegible] a major source of asbestos emissions: [illegible] asbestos cement building products, asbestos cement pipe, asbestos cement sheet, friction materials, and certain gaskets. The amendment to the definition of asbestos mill proposed herein is to limit the coverage of asbestos from central fabrication shops which process these types of manufactured products. The proposed amend-

ASARCO ELP 0000712

ment prohibits visible emissions to the outside air but provides an option for using specified air-cleaning methods, which is the same emission limit that is specified for asbestos manufacturing sources. Asbestos cement building products include flat sheets, corrugated sheets, shingles, and laminated panels which are used for walls and roofs of industrial buildings, canal bulkheads, cooling tower construction, and other applications. The major applications of asbestos cement or asbestos silicate board which involve fabrication have been identified as ventilation hoods; ovens; electrical panels; laboratory furniture; bulkheads; partitions, and ceilings for marine construction; and flow control devices for the molten metal industry. Fabrication of friction materials include brake lining and clutch facings for motor vehicles. Enforcement of the asbestos standard revealed the existence of facilities which fabricate automotive brake shoe linings but do not manufacture the linings as that term is defined in the promulgated regulations, and therefore are not covered by the standard. The fabrication operations performed at these facilities are similar to those at asbestos friction product manufacturing plants, which are covered by the standard. The proposed amendment extends coverage of the asbestos standard to these fabrication operations, but does not apply to brake shoe radius-grinding which is sometimes performed during brake shoe replacement on automobiles to ensure good braking immediately after installation. Relatively small quantities of asbestos-containing dust are generated by individual installers, and even these small quantities were being controlled at facilities inspected by the Agency. Combination brake drum grinding and brake shoe radius-grinding machines are in general use which are equipped with a local dust pick-up and fabric-type filter for collection of the brake lining dust. Also, the emissions are generally vented into the room where the operation takes place rather than into the outside air.

Demolition and Renovation. Amendments to the demolition provisions of the asbestos standard are proposed herein. A definition of "friable asbestos material" is proposed, and an exemption from certain wetting requirements under subfreezing conditions is proposed. It is also proposed that the standard cover renovation operations and stripping of insulating other than pipes, boilers, and load supporting structural members.

The demolition provisions, 40 CFR 61.21, require a report to the Administrator of intention to demolish. It has been questioned whether friable asbestos materials may be removed from a building, structure, facility, or installation prior to submitting the report, and without following the work practices of the standard. The intent of the standard is to control emissions of asbestos from the disposal and removal of the friable asbestos material as well as from the actual wrecking operations. Consequently, it is proposed to revise the definition of "demolition" (39 FR 15396) to clarify that demolition includes the removal or stripping of friable asbestos materials or specified items insulated or fireproofed with friable asbestos materials prior to the wrecking and removal of load-supporting structural members.

The current demolition provisions of the asbestos standard apply only to "friable asbestos materials." Enforcing the standard led to questions about which materials are "friable" and which materials are not "friable." It is not possible to specify friability in a quantifiable way because there is no standardized test method for friability; however, the provisions proposed herein include a definition for "friable asbestos material." The definition is "any material that contains more than 1 percent asbestos by weight and that can be crumbled, pulverized, or reduced to powder, when dry, by hand pressure." The use of the term "friable asbestos material" in the standard is intended to distinguish between materials such as vinyl-asbestos floor tile and molded asbestos pipe insulation. The asbestos fibers in floor tile are tightly bound and cannot escape easily; however, asbestos fibers in molded materials are readily released.

The Agency has received comments from demolition trade associations concerning the friability of corrugated asbestos paper insulation. The determination of whether this type of insulation is friable is complicated. Friability of such paper after installation appears to depend on the degree of deterioration of the paper binders. New paper insulation does not seem to be friable, but insulation which has been installed for a long period of time is more likely to have undergone some deterioration and become friable. Therefore, the determination of whether corrugated asbestos paper insulation is friable will be made on a case-by-case basis.

The proposed definition of "friable asbestos material" excludes those materials that contain less than 1 percent asbestos by weight. This exclusion is intended to make the demolition provisions consistent with the spraying provisions which permit the use of spray-applied asbestos insulation or fireproofing that contains less than 1 percent asbestos by weight. Asbestos insulation or fireproofing materials have in the past generally contained between 10 and 90 percent asbestos by weight. No materials are known that contain below 1 percent asbestos by weight, with the exception of recently developed spray-on insulation or fireproofing products and materials that contain asbestos as a natural contaminant.

The promulgated asbestos regulation does not apply to renovation operations where load-supporting structural members are not wrecked; or to stripping and removal in sections of insulation other than pipes, boilers and load-supporting structural members covered with friable asbestos materials. Investigations conducted by the Agency indicate that the following operations can potentially generate asbestos emissions similar in magnitude to operations covered by the promulgated standard, and these operations are therefore major sources of asbestos emissions:

1. During renovation of buildings or structures, the stripping of significant amounts of friable asbestos material from pipes, boilers, tanks, reactors, turbines, furnaces, or structural members; or the removing of such pipes and apparatus in sections.

2. During demolition of buildings or structures, the stripping of friable asbestos materials from tanks, reactors, turbines, furnaces, and non-load-supporting structural members; or the removing of such apparatus in sections.

3. During demolition of buildings or structures, the stripping of friable asbestos material from previously removed units or sections of pipes, boilers, reactors, turbines, furnaces, and structural members covered with friable asbestos materials.

The Administrator has determined that a four-unit apartment building, the maximum size apartment building that is excluded from the asbestos standard, typically contains 80 meters of insulated pipe and 15 square meters of insulation on a steam boiler. Renovation operations involving such quantities of friable asbestos materials could therefore generate asbestos emissions of the same magnitude as the demolition operations presently covered by the standard. Therefore, the Administrator proposes to extend the asbestos standard to cover renovation operations with emission potential of a magnitude similar to that of demolition operations covered by the standard.

It is recognized that in some renovations, such as the replacement of a boiler in an apartment building, it may not be feasible to provide 10 days' notice as required by the asbestos standard. Accordingly, the amendments proposed herein specify that notice of any renovation operation must be provided "as early as possible" prior to the commencement of renovation. When 10 days' notice is possible, the notice should be postmarked that early.

It is proposed that the demolition provisions be amended to allow load-supporting structural members to be wrecked before friable asbestos material is removed from the entire building or structure, provided that: (a) The friable asbestos material in the area that is being actively wrecked is previously removed according to the procedures required by the standard, and (b) the friable asbestos material in areas not being wrecked still can be stripped or removed prior to subsequent active wrecking in those areas. The proposed provision does not alter the stringency of the asbestos standard but does provide some flexibility to the contractor carrying out a demolition operation.

The demolition industry commented that the promulgated asbestos standard should permit pipes or apparatus to be taken out of buildings or structures in units or in sections without first stripping the asbestos insulation or fireproofing.

Demolition & Renovation

ASARCO ELP 0000713

The promulgated standard does not prohibit this practice; but since such questions had been raised, amendments were promulgated (39 FR 15396) to clarify that this practice is permitted. The units or sections can be stripped at the demolition site or other unenclosed area after removal, or possibly in an enclosed building. The stripping operations for units or sections are considered by the Administrator to be major asbestos emission sources similar to stripping performed in place in buildings or structures. Therefore, it is proposed herein that the requirement for wetting friable asbestos insulating and fireproofing materials during stripping in buildings and structures be extended to cover the stripping of pipes or apparatus removed in sections or units from the buildings or structures with the asbestos materials in place. No exception is also included for use of certified air-cleaning equipment if the stripping is carried out in an enclosed area.

It is proposed herein that the requirement of the promulgated standard for wetting of asbestos insulation and fireproofing during stripping from a building, structure, facility or installation be suspended when the temperature is below 0°C (32°F) at the place of wetting the friable asbestos materials. Demolition contractors have commented that wetting at temperatures below this level produces freezing of oversprayed water and hazardous footing for workers. On the basis of observations by the Agency of demolition sites during freezing weather, the Administrator has determined that the spraying of water in those areas where workers will be walking presents a serious hazard. A narrow exemption from the wetting requirement during freezing weather is therefore proposed. However, friable asbestos materials must still be removed from the building or structure prior to wrecking, and procedures have been specified in the proposed amendment which will minimize asbestos emissions when the wetting requirements are suspended because of freezing weather. Pipes and specified apparatus with friable asbestos materials intact must be removed in sections prior to wrecking whenever possible. Once these sections are removed from buildings, subsequent stripping of friable asbestos materials is not exempted from the wetting requirements, regardless of outside temperature. Additionally, friable asbestos material wastes must be wetted under all circumstances. It is the Administrator's judgment that, when the above measures are taken, the suspension of the wetting requirements during periods of freezing weather will continue to protect human health with an ample margin of safety.

A revision is proposed herein which makes the reporting requirements for emergency demolition operations more explicit and requires wetting during such operations. Only buildings, structures, facilities, and installations which have been ordered to be demolished because they are structurally unsound and in danger of imminent collapse would be exempted from the requirement of stripping or removing of friable asbestos materials before demolition. The order for emergency demolition must be made by an authorized representative of the appropriate State or local governmental agency. The proposed amendments require that the report of intention to demolish be postmarked as early as possible prior to the commencement of demolition. In such emergency operations, the portions of the structure containing friable asbestos material must be wetted during the wrecking operation. This requirement applies even in freezing weather, since such spraying will not endanger workmen within the building.

Waste Disposal. The petition of the Environmental Defense Fund, et al., questioned the exclusion of asbestos waste disposal operations and some portions of asbestos mill-tailings disposal operations from the promulgated standard. In response to the questions raised, the Agency initiated a more extensive study of emissions from the disposal of asbestos-containing waste materials. Asbestos ambient air monitoring studies were conducted at an asbestos mill-tailings disposal site, and at a waste disposal site for asbestos manufacturing and fabricating operations. In addition, seven asbestos waste disposal or landfill operations, and six asbestos mill-tailings disposal sites were inspected. Discussions were held with asbestos manufacturing plant operators, asbestos fabricating plant operators, and demolition contractors. The results of this investigation indicated that asbestos waste disposal should be regulated by the national emission standard for asbestos. Amendments are proposed herein for the disposal of asbestos wastes generated by asbestos mills; and for asbestos manufacturing, fabricating, demolition, and spraying operations which are covered by either the promulgated standard or provisions proposed herein. The proposed standard controls the waste disposal operations of packaging, transporting, and deposition at a waste disposal site, and operation of the asbestos waste disposal site.

The proposed provisions for the disposal of asbestos waste require that there be no visible emissions to the outside air during any phase of the disposal process, extending from collection of the waste through deposition of the waste at an ultimate disposal site. The use of specified disposal practices is proposed as an alternative to complying with the no-visible-emission requirement of the regulations.

The method proposed as an alternative to the no-visible-emission requirement for asbestos mill waste disposal requires that the waste be adequately wetted with a specified dust suppression agent, without creating visible emissions to the outside air, and subsequently deposited at a disposal site.

Two methods are proposed as alternatives to the no-visible-emission requirement for the asbestos waste generated at asbestos manufacturing, fabricating, demolition, and spraying operations. One method allows wetting the waste with water without creating visible emissions to the atmosphere, then sealing the wetted waste into impermeable containers, labeling the containers to provide notice that a hazardous material is contained within, and depositing the filled containers at a disposal site. The second method allows for the asbestos waste to be formed into non-friable pellets without creating visible emissions to the outside air and then depositing the pelletized waste at a disposal site.

The Agency investigation revealed that in some cases empty paper and plastic bags that previously contained asbestos were contaminated with asbestos fibers and were incinerated. There is no known control device available that allows most solid waste incinerators to control particulate emissions to the level demonstrable for such sources as asbestos mill and manufacturing operations covered by the promulgated regulation. There are environmentally acceptable alternative disposal methods for disposing of such waste, such as landfilling. Accordingly, it is proposed herein to prohibit the incineration of containers such as paper or plastic bags that previously contained commercial asbestos.

The proposed provisions for waste disposal sites require that there be no visible emissions to the outside air from the operations performed at the site and from the deposited waste. In addition, it is proposed that warning signs be installed to alert the general public of the potential asbestos hazard, and that fences be installed to restrict access of the general public to the disposal site. The intent of the fencing requirement is to provide a positive deterrent to the general public, especially children, in gaining entrance to the disposal site, creating asbestos dust by disturbing the surface of the waste site, and becoming exposed to asbestos emissions. If the asbestos waste is disposed of in a landfill operation that is covered by at least 60 centimeters of non-asbestos containing material or 15 centimeters of [illegible] asbestos-containing material on [illegible] adequate vegetative cover is established minor disturbances of the surface such as walking will not cause the generation of asbestos emissions. Therefore, [illegible] sections of a disposal site are exempt from the fencing requirement.

The proposed alternatives for complying with the no-visible-emission requirement for waste disposal [illegible] divided into two groups. Those [illegible] must comply with at least one of [illegible] specified disposal methods for [illegible] sections of the site and those [illegible] fied management methods for [illegible] sections of a site. The proposed [illegible] distinguish between [illegible] active sections of a site [illegible] to completion [illegible] from such operation either

For an active disposal site [illegible] of the waste with a [illegible] layer of compacted [illegible] covering the waste with [illegible] material of non-asbestos material at the

ASARCO ELP 0000714

end of each operating day, will reduce emissions.

The Agency's guidelines for Land Disposal of Solid Waste which were promulgated on August 14, 1974 (39 FR 29333), recommend that the thickness of compacted final cover for waste disposal sites should not be less than 60 centimeters (ca. 2 feet). However, these guidelines do not apply to mining wastes. Since asbestos tailings piles are generally large in area, over 400,000 square meters (ca. 100 acres) in some cases, the requirement for a final non-asbestos-containing material cover of 60 centimeters (2 feet) be applied to such large, largely stored piles is usually not practical. Accordingly, the proposed alternatives for inactive sections of asbestos mill tailings disposal do include the use of dust suppression agents, which is not included for other asbestos waste disposal sites that are regulated. Emissions from inactive asbestos mill tailings disposal sites, or inactive sections of such sites, are regulated by the following alternative methods that reduce asbestos emissions:

1. Spraying the surface of the site with a resinous or petroleum-based dust suppression agent according to the manufacturer's recommended application rate, or

2. Covering the disposal site with 15 centimeters of non-asbestos-containing material, and establishing and maintaining a cover of vegetation on the disposal site adequate to control wind and water erosion.

3. Covering the disposal site with 60 centimeters of non-asbestos-containing material and maintaining such a cover in an erosion-free condition.

Emissions from inactive asbestos waste disposal sites, or inactive sections of such sites, other than asbestos mill tailings piles, are regulated by the following alternative methods that reduce asbestos emissions:

1. Covering the inactive asbestos-containing section of the disposal site with 15 centimeters of non-asbestos-containing material, and establishing and maintaining a cover of vegetation on this area adequate to control wind and water erosion, or

2. Covering the inactive section of the asbestos-containing section of the disposal site with 60 centimeters of non-asbestos-containing material and maintaining such cover in an erosion-free condition.

Mercury

An amendment to the mercury standard is proposed herein to limit mercury emissions from the incineration and drying of wastewater treatment plant sludges to a maximum of 3,200 grams per day. The emission limit was calculated from dispersion estimates to ensure that such sources would not cause the ambient mercury concentration to exceed 1 microgram per cubic meter averaged over a 30-day period. The meteorological calculation procedure is the same as that used to develop standards for mercury ore processing facilities and mercury chlor-alkali plants (38 FR 8820), except that emission release conditions representative of sludge incineration sites have been used. The assumptions and equations used to make the dispersion estimates are discussed in the background information report.

At the time of proposal (36 FR 23239) and promulgation (38 FR 8820) of the national emission standard for mercury, the Agency had no information which indicated that sewage sludge incineration plants emit mercury in quantities that could cause the ambient concentration to exceed 1 microgram per cubic meter averaged over a 30-day period. The information available to the Administrator included stack tests for mercury emissions at five sewage sludge incineration plants. The maximum emission rate was 125 grams of mercury per day based on one of the tests which was later judged to be invalid on the basis of mass balance calculations. Emissions for the remaining four tests ranged from 1 to 40 grams of mercury per day.

After promulgation of the national emission standard for mercury, questions concerning the impact on public health of mercury emissions from sewage sludge incinerators were raised by the Environmental Defense Fund in their Petition for Review of the national emission standards for hazardous air pollutants. Similar questions were raised in connection with proposals to construct several large sludge incineration facilities. In response, the Agency initiated a study to more completely characterize emissions of mercury from sewage sludge incinerators.

Results from one emission test conducted during the more recent investigation gave an emission factor of 1.65 grams of mercury per metric ton of sludge incinerated, dry solids basis. The mercury stack sampling method described in Method 101 (38 FR 8835) was used during the most recent test. The results of all tests suggest that a significant quantity of mercury is collected by water scrubbers.

Mercury is emitted from the drying of municipal sludges and the incineration of industrial wastewater sludges, as well as from the incineration of municipal sludges. The pretreatment of industrial wastewater streams to remove mercury before discharge into municipal wastewater treatment streams may be required in the future. This could produce sludges, which might be incinerated, with higher concentrations of mercury than municipal or combined municipal-industrial wastewater treatment plant sludges. Mercury concentrations of sewage sludges nationally average approximately 5 ppm on a dry solids basis; however, approximately 10 percent of the sludge samples have mercury concentrations in excess of 15 ppm. Very large sludge incineration facilities are being contemplated for the future; for example, one existing facility will in the near future incinerate 900,000 kg (ca. 2,000,000 pounds) of dry solids per day. If that plant burned sludge with the highest reasonably expected mercury content of 15 ppm, and if only 60 percent of the mercury in the sludge were emitted into the atmosphere, the plant would emit 6,800 grams of mercury per day. This amount is over twice the maximum allowable mercury emission necessary to protect public health with an adequate margin of safety. Sludge incineration facilities with capacities of 1,800,000 kg (ca. 4,000,000 pounds) per day are being planned for operation in 2005.

In view of the potentially large mercury emissions from sludge incineration plants, the Administrator has determined it is prudent to limit mercury emissions from this source. While not all incineration facilities are known to be exceeding the proposed mercury emission limitation of 3,200 grams per day, the proposed limitation will prevent a significant proportion of potential mercury emissions from occurring in the future by ensuring that new facilities investigate and provide control of potential mercury emissions prior to construction.

Compliance with the proposed standard can be demonstrated either by determining the mercury content and charging rate of sludge and showing that the mercury input into the incineration plant is less than the maximum allowable emission, or by mercury stack sampling. Most affected facilities are expected to choose the less expensive sludge sampling option; relatively few, if any, will find it necessary to sample stack emissions.

Both the original national emission standard for mercury and the proposed amendments are designed to control the concentration of mercury in the ambient air adjacent to the point source. Thus the standard is concerned primarily with the threat posed by inhalation of mercury in air immediately proximate to the point source. It does not deal with the long-range hazard posed by the addition of mercury from these point sources to the total environmental burden. This is addressed, for example, in the mercury discharged from chlor-alkali [illegible] and methylated and transported [illegible]. The Agency has become increasingly concerned about the total contribution of mercury, however, and is evaluating studies [illegible] the problem can not be alleviated by control under the [illegible] and other [illegible]

Environmental Impact

The proposed [illegible] will be significant beneficial [illegible] mercury emissions to the [illegible] outside and may even have significant adverse effects on land and water sources. In the judgment of the Administrator, however, the [illegible] of the proposed [illegible] The following [illegible] that were [illegible]

1. Mercury [illegible] will be [illegible] to control [illegible] will prevent [illegible]

2. The [illegible] to prevent [illegible] may cause water pollution.

ASARCO ELP 0000715

3. Other possibly harmful fibers such as fiberglass and mineral wool are substituted for asbestos in friable insulating materials.

4. Alternative disposal methods to the incineration of wastewater treatment plant sludges may cause mercury pollution of land and water.

The proposed amendments will force more efficient cleaning of gases now being emitted to the outside air from some asbestos manufacturing and fabrication [illegible]; this action in turn will result in the production of more asbestos-containing material for disposal. However, the total quantity of such waste will be reduced by the proposed standard, which will improve the protection against emissions [illegible] air during all steps of the [illegible]. Further, potential asbestos pollution problems at disposal [illegible] can be prevented by proper selection, design and operation of the [illegible]. All landfill sites where asbestos wastes are deposited should be selected so as to prevent horizontal and vertical movement of asbestos fibers to ground or surface waters. In cases where geologic conditions may not reasonably ensure this, adequate precautions, such as the installation of impervious liners for the waste disposal site, should be taken to ensure long-term protection of the environment. Further, the intrusion of moisture into land disposal sites for asbestos should be minimized. To assist in the appropriate future use of asbestos waste disposal sites, the location of such sites should be permanently recorded in the appropriate office of the legal jurisdiction where the site is located. The asbestos waste disposal standard will be beneficial in reducing the amount of asbestos wastes that are disposed of, since it will stimulate some manufacturers who produce large quantities of potential wastes to reuse more of these wastes in their processes. The proposed standard will not increase the total quantity of asbestos waste to be disposed of from demolition and renovation operations, but will result in the segregation of the asbestos waste from large quantities of other demolition and renovation debris. Because the asbestos waste will then be more concentrated, the strict control of the disposal operations under the proposed standard will be more convenient and manageable.

The use of dust suppression agents as an additional methods to control wind erosion on all portions of asbestos mill tailings piles and on active sections of other asbestos waste disposal sites should reduce the total amount of asbestos entering surface waters from such sites. Such methods have been used successfully to prevent wind erosion of dust from various sources such as dirt roads, mine tailings, coal piles, farm lands and airports. While these agents could possibly cause land and water pollution problems, the half-life of these over a period of more than 10 years has not prevented their successful control problems. These agents are not toxic in the dilute form in which they are applied. After the agents have cured for a few hours, they will erode away only with long-term weathering.

Although asbestos is no longer used in manufacturing friable insulating materials in the United States, the proposed standard bans the use of asbestos and therefore allows the use of substitute fibers such as ceramic wool, mineral wool, and fiberglass. In contrast with asbestos, there is no evidence that these materials cause adverse health effects in the concentrations found in occupational or ambient environments.

The proposed amendment to the mercury standard will force sludge incineration and drying plants to use alternative sludge disposal methods in only a few cases. While the use of land disposal could potentially cause mercury pollution of land and water, the amount of sludge that would have to be disposed of by this method will be very small compared to the quantity of sludge already being disposed of by methods other than incineration. Adverse environmental effects to land and water can be minimized by proper selection, design, and operation of a land disposal method.

ECONOMIC IMPACT

Although the proposed amendments are not based on economic considerations, the Agency has evaluated the economic impact and considers it to be reasonable. Estimated costs for compliance for the several sources covered by the amendments, and the resulting economic impact, are discussed in the background information document.

Compliance with the proposed amendments to the asbestos standard will be achieved by the installation of small gas-cleaning devices, the use of asbestos-free materials, wetting during wrecking or renovation operations, the application of dust suppression agents to asbestos waste disposal piles, and other methods. Costs will vary greatly among the categories of asbestos sources because a wide variety of sources of both fugitive and process emissions are covered. Costs will also vary greatly among individual asbestos sources within a category, since the degree of control practiced now is variable; some sources can comply without additional expenditures. The proposed amendments may adversely affect some individual marginal operations, but the impact to the asbestos industries as a whole should not be large.

The economic impact of the proposed mercury standard on existing sludge incineration and drying plants is expected to be minimal. No known existing plants will exceed the standard, and the cost of demonstrating compliance will be only about $200 for most individual sources. Only those new sludge incineration and drying plants that process high-mercury-content sludge, or extremely large quantities of sludge, will be affected by the proposed standard. The size of such new sludge incinerators will be limited, with the result that a portion of the sludge will have to be disposed of by alternative methods. While the alternative methods may increase disposal costs for a few facilities, the impact of the proposed standard on new sludge incinerators is also estimated to be small.

This notice of proposed rulemaking is issued under the authority of sections 112 and 114 of the Clean Air Act as amended (42 U.S.C. 1857c-6 and 9).

Dated: October 10, 1974.

JOHN QUARLES,
Acting Administrator.

It is proposed to amend Part 61 of Chapter I, Title 40 of the Code of Federal Regulations by revising subparts A, B, and E and by adding Method 105 to Appendix B as follows:

Subpart A—General Provisions

1. Section 61.14 is amended by revising paragraph (c) and adding paragraph (d). The revised and added paragraphs read as follows:

§ 61.14 Source test and analytical methods.

* * * * *

(c) The Administrator may, after notice to the owner or operator, withdraw approval of an alternative method granted under paragraphs (a), (b), or (d) of this section. Where the test results using an alternative method do not adequately indicate whether a source is in compliance with a standard, the Administrator may require the use of the reference method or its equivalent.

(d) Method 105 in Appendix B to this part is hereby approved by the Administrator as an alternative method for sources subject to § 61.52(b).

Subpart B—National Emission Standard for Asbestos

2. Section 61.21 is amended by revising paragraph (j) and adding paragraphs (k), (l), (m), (n), (o), (p), (q), and (r). The revised and added paragraphs read as follows:

§ 61.21 Definitions.

* * * * *

(j) "Demolition" means the wrecking or taking out of any load-supporting structural member and any related removing or stripping of friable asbestos materials.

(k) "Friable asbestos material" means any material that contains more than 1 percent asbestos by weight and that can be crumbled, pulverized, or reduced to powder, when dry, by hand pressure.

(l) "Control device" means any asbestos-containing waste material that is collected in a control device.

(m) "Renovating" means the removing or stripping of friable asbestos material used to insulate more than 80 linear feet, 260 feet of pipe or 15 square meters, 160 square feet of surface area of friable asbestos material used to insulate or fireproof any boiler, tank, reactor, turbine, furnace or structural member. Operations in which load-supporting structural members are wrecked or taken out are excluded.

ASARCO ELP 0000716

(n) "Removing" means taking out friable asbestos materials used to insulate or fireproof any pipe, boiler, tank, reactor, turbine, furnace, or structural member from any building, structure, facility, or installation.

(o) "Stripping" means taking off friable asbestos materials used for insulation or fireproofing from any pipe, boiler, tank, reactor, turbine, furnace, or structural member.

(p) "[illegible] cleaning" means any process of a manufactured product containing commercial asbestos, with the exception of processes at temporary sites for the construction or restoration of buildings, structures, facilities, or installations.

(q) "Inactive section of disposal site" means any section of a disposal site [illegible] additional asbestos waste material will not be deposited and where the surface is not disturbed by vehicular traffic.

(r) "Active section of disposal site" means any section of a disposal site other than an inactive section.

3. Section 61.22 is amended by revising paragraphs (c)(10) and (c)(11), (d), (f), and (g) and adding paragraphs (h), (i), (j), (k), and (l). The revised and added paragraphs read as follows:

§ 61.22 Emission standard.

* * * * *

(c) * * *

(10) The manufacture of shotgun shells.

(11) The manufacture of asphalt concrete.

(d) Demolition and renovation: The requirements of this paragraph shall apply to any owner or operator of a demolition or renovation operation who intends to demolish any institutional, commercial, or industrial building (including apartment buildings having more than four dwelling units), structure, facility, installation, or portion thereof which contains any pipe, boiler, tank, reactor, turbine, furnace, or structural member that is insulated or fireproofed with friable asbestos material; or who intends to renovate any institutional, commercial, or industrial building, structure, facility, installation, or portion thereof.

(1) Written notice of intention to demolish or renovate shall be provided to the Administrator by the owner or operator of the demolition or renovation operation. Each notice shall be postmarked at least 10 days prior to commencement of demolition, or as early as possible prior to commencement of emergency demolition subject to paragraph (d)(4) of this section, and as early as possible prior to commencement of renovation. Each notice shall include the following information:

(i) Name of owner or operator.

(ii) Address of owner or operator.

(iii) Description of the building, structure, facility, or installation to be demolished or renovated, including the age, size, and prior use of the structure; and the approximate amount of friable asbestos material used for insulation or fireproofing.

(iv) Address or location of the building, structure, facility, or installation.

(v) Scheduled starting and completion dates of demolition or renovation.

(vi) Nature of planned demolition or renovation and method(s) to be employed.

(vii) Procedures to be employed to meet the requirements of this paragraph and paragraph (j) of this section.

(viii) Name, title, and authority of the State or local governmental representative who has ordered a demolition subject to paragraph (d) (4) of this section.

(2) The following procedures shall be used to prevent emissions of particulate asbestos material to outside air:

(i) Friable asbestos materials, used to insulate or fireproof any pipe, boiler, tank, reactor, turbine, furnace, or structural member, shall be removed from any building, structure, facility, or installation subject to this paragraph. Such removal shall occur before wrecking or dismantling of any portion of such building, structure, facility, or installation that would break up the friable asbestos materials or that would preclude access to such materials in another portion for subsequent removal.

(ii) All stripping shall be accomplished while the friable asbestos material is adequately wetted, except as provided in paragraph (d) (2) (vii) of this section.

(iii) Pipes, boilers, tanks, reactors, turbines, furnaces, or structural members that are insulated or fireproofed with friable asbestos materials may be taken out of any building, structure, facility, or installation subject to this paragraph as units or in sections provided the friable asbestos materials exposed during cutting or disjointing are adequately wetted during the cutting or disjointing operation and subsequent removal. Such units shall not be dropped or thrown to the ground from any building, structure, facility or installation subject to this paragraph but shall be carefully lowered to ground level.

(iv) The stripping of friable asbestos materials used to insulate or fireproof any pipe, boiler, tank, reactor, turbine, furnace, or structural member that has been removed as a unit or in sections as provided in paragraph (d) (2) (iii) of this section shall be performed in accordance with paragraph (d) (2) (ii) of this section. Rather than comply with the wetting requirement, an owner or operator may elect to use the methods specified in § 61.23 to clean emissions containing particulate asbestos material before such emissions escape to, or are vented to, the outside air.

(v) Friable asbestos materials used for insulation or fireproofing which are encased in concrete or other similar structural material do not have to be removed prior to wrecking, but shall be thoroughly wetted when exposed throughout the wrecking of such materials.

(vi) All friable asbestos materials that have been removed or stripped shall be wetted adequately to ensure that such materials remain wet during all stages of demolition, renovation and related handling operations. Such materials shall not be dropped or thrown to the ground from any building, structure, facility or installation subject to this paragraph or from any floor to a floor below. For buildings, structures, facilities, or installations 50 feet or greater in height, such materials shall be transported to the ground via dust-tight chutes or containers.

(vii) Except as specified below, the wetting requirements of this paragraph are suspended when the temperature at the point of wetting of friable asbestos materials is below 0°C 32 F). Whenever friable asbestos materials are not wetted due to freezing temperatures, such materials on pipes, boilers, tanks, reactors, turbines, furnaces, or structural members shall, to the maximum extent possible, be removed in sections prior to wrecking. In no case shall the requirements of paragraphs (d) (2) (iv) or (d) (2) (vi) be suspended due to freezing temperatures.

(3) Sources subject to this paragraph are exempt from the requirements of §§ 61.05(a), 61.07, and 61.09.

(4) Any owner or operator of a demolition operation who intends to demolish a building, structure, facility, or installation, or portion thereof, to which the provisions of this paragraph would apply but which has been ordered to be wrecked by an authorized representative of the appropriate State or local governmental agency because that building is structurally unsound and in danger of imminent collapse is exempt from all but the following requirements of paragraph (d) of this section:

(i) The report requirements specified by paragraph (d) (1) of this section;

(ii) The requirements on stripping of friable asbestos materials from previously removed units or sections as specified in paragraph (d) (2) (iv) of this section;

(iii) The wetting, as specified by paragraph (d) (2) (vi) of this section, of friable asbestos materials that have been removed or stripped;

(iv) The portion of the structure being demolished that contains friable asbestos materials shall be adequately wetted during the wrecking operation.

* * * * *

(f) Rather than meet the no-visible-emission requirements of [illegible] paragraphs (a), (c), (e), (j), (k), and (l) of this section, an owner or operator may elect to use the methods specified by § 61.23 to clean emissions containing particulate asbestos material before such emissions escape to, or are vented to, the outside air.

(g) Where the presence of uncombined water is the sole reason for failure to meet the no-visible-emission requirement of paragraphs (a), (c), (e), (h), (i), or (k) of this section, such failure shall not be a violation of such emission requirements.

(h) Fabricating: There shall be no visible emissions to the outside air, except

ASARCO ELP 0000717

as provided in paragraph (f) of this section, from any building or structure in which the following operations are conducted or directly from any of the following operations if they are conducted outside of buildings or structures:

(1) The fabrication of cement building products.

(2) The fabrication of friction products, except those operations that primarily install asbestos friction materials on motor vehicles

(3) The [illegible] of cement or silicate-bonded [illegible] ventilation hoods; ovens; electrical panels; laboratory furnaces; bushings, partitions and ceilings for [illegible] construction; and flow control devices for the molten metal industry.

(4) Insulating: Molded insulating [illegible] which are friable and wet-[illegible] insulating materials which are [illegible] after drying, installed after the effective date of these regulations, shall contain no commercial asbestos. The provisions of this paragraph do not apply to insulating materials which are spray applied; such materials are regulated under § 61.22(e).

(j) Waste disposal for manufacturing, fabricating, demolition, renovation, and spraying operations:

(1) There shall be no visible emissions to the outside air, except as provided in paragraph (j)(3) of this section, from the collection, processing, packaging, transporting, or deposition of asbestos-containing waste which is generated by the sources covered by paragraphs (c), (e), and (h) of this section, and of the friable asbestos waste and control device asbestos waste which is generated by the sources covered by paragraph (d) of this section. The owners or operators of such sources shall take all necessary actions to ensure that all steps, from collection through deposition at a waste disposal site, in the disposal process of asbestos-containing wastes generated by the sources comply with the provisions of this paragraph.

(2) The incineration of containers which previously contained commercial asbestos is prohibited.

(3) Rather than meet the requirements of paragraph (j)(1) of this section, an owner or operator may elect to use either of the disposal methods specified under (i) and (ii), or an alternative disposal method approved by the Administrator:

(i) Wetting of asbestos-containing waste with water:

(A) Control device asbestos waste shall be thoroughly mixed with water into a slurry and other wastes specified by paragraph (j)(1) of this section shall be thoroughly wetted. There shall be no visible emissions to the outside air from the wetting operation, except as provided in paragraph (f) of this section.

(B) All waste specified in paragraph (j)(1) of this section shall be sealed into impermeable containers while wet, and shall be deposited while wet in such containers at a waste disposal site.

(C) The containers specified in paragraph (j)(3)(i)(B) of this section shall be labeled with a warning label, that states:

CAUTION

CONTAINS ASBESTOS

AVOID OPENING OR BREAKING CONTAINER

BREATHING ASBESTOS IS HAZARDOUS TO YOUR HEALTH

(ii) Pelletizing of asbestos-containing waste into non-friable pellets:

(A) All wastes specified in paragraph (j)(1) of this section shall be pelletized into non-friable pellets and deposited at a waste disposal site.

(B) The collection of all wastes specified in paragraph (j)(1) of this section and the pelletizing operation shall not result in the discharge of visible emissions to the outside air except as specified in paragraph (f) of this section.

(k) Waste disposal for asbestos mills:

(1) There shall be no visible emissions to the outside air, except as provided in paragraph (k)(2) of this section, from the collection, processing, packaging, transporting, or deposition of asbestos ore tailings or control device asbestos waste which is generated by an asbestos mill.

(2) Rather than meet the requirement of paragraph (k)(1) of this section, an owner or operator may elect to use the following methods, or an alternative disposal method approved by the Administrator:

(i) Control device asbestos waste shall be transferred to the tailings conveyor in a manner that results in the discharge of no visible emissions to the outside air, except as provided in paragraph (f) of this section. Such waste shall be subsequently processed as specified in paragraph (k)(2)(ii) of this section. Alternatively, such waste may be disposed of as specified in paragraph (j)(3) of this section.

(ii) All ore tailings and control device asbestos waste shall be adequately wetted, with a resinous or petroleum-based dust suppression agent recommended by the manufacturer of the agent to effectively bind dust and control wind erosion, prior to deposition in the tailings disposal area. Such agent shall be mixed in the concentration recommended for the particular dust by the manufacturer of the agent. Other equally effective dust suppression agents may be used upon approval by the Administrator. There shall be no discharge of visible emissions to the outside air from the wetting operation except as specified in paragraph (f) of this section.

(l) Waste disposal sites:

(1) There shall be no visible emissions to the outside air from any active or inactive section of a waste disposal site where asbestos-containing waste has been deposited, except as provided in paragraph (l)(4) of this section.

(2) Warning signs shall be displayed at all entrances and along the property line at intervals of 100 m (ca. 330 ft.) or less of all active or inactive asbestos waste disposal sites. Signs shall be posted in such a manner and location that a person may easily read the legend. The warning signs required by this paragraph shall conform to the requirements of 20" x 14" upright format signs specified in 29 CFR 1910.145(d)(4) (37 FR [illegible]) and this paragraph. The signs shall display the following legend in the lower panel, with letter sizes and styles of a visibility at least equal to those specified in this paragraph.

Legend

ASBESTOS WASTE DISPOSAL SITE

Do Not Create Dust
Breathing Asbestos
Is Hazardous to Your Health

Option

1" Sans Serif, Gothic or Block
"1" Sans Serif, Gothic or Block
14 Point Gothic

Spacing between lines shall be at least equal to the height of the upper of the two lines.

(3) Asbestos-containing sections of the disposal site shall be fenced in order to deter access by unauthorized individuals, unless the requirements of paragraphs (l)(4)(i)(B) and (l)(4)(ii) are met.

(4) Rather than meet the requirement of paragraph (l)(1) of this section for emissions after the deposition of asbestos-containing waste at a disposal site, an owner or operator may elect to use one of the methods of paragraph (l)(4)(i) of this section and one or more of the methods of paragraph (l)(4)(ii) or (l)(4)(iii) of this section, or alternative control methods approved by the Administrator to control emissions from waste disposal sites.

(i) Active sections of disposal sites:

(A) A resinous or petroleum-based dust suppression agent which effectively binds dust and controls wind erosion shall be applied at the end of each operating day, or at least once every 24-hour period while the site is in continuous operation, to all asbestos-containing active portions of a disposal site. Such agent shall be mixed in the concentration recommended for the particular dust by the manufacturer of the agent to effectively bind dust and control wind erosion. Other equally effective dust suppression agents may be used upon approval by the Administrator; or

(B) A cover of at least 15 cm (6 in.) of compacted nonasbestos-containing material shall be applied at the end of each operating day or at least once every 24-hour period while the site is in continuous operation to all asbestos-containing active portions of the disposal site. Such cover material shall be free of visible asbestos emissions to the outside air.

(ii) Inactive Sections of Disposal Sites Other Than Active Sections of Disposal Sites:

(A) Active sections of disposal sites, or sections of disposal sites that have been covered with at least 15 cm (6 in.) of nonasbestos-containing material, and on which vegetation shall be established and maintained to the extent necessary to prevent exposure of the asbestos-containing material; or

(B) Active asbestos-containing waste disposal sites, or sections of such sites, that

ASARCO ELP 0000718

be covered with at least 60 centimeters (ca. 2 feet) of compacted non-asbestos-containing material and maintained to prevent exposure of the asbestos-containing waste.

(iii) Inactive Sections of Asbestos Mill Tailings Disposal Sites:

(A) A resinous or petroleum-based dust suppression agent which effectively binds dust and controls wind erosion shall be applied to all inactive asbestos mill tailings disposal sites, or sections of such sites. Such agents shall be mixed in the concentration and applied at the rate recommended for the particular asbestos mill tailings by the dust suppressant manufacturer. Other equally effective dust suppressant agents may be used upon approval by the Administrator; or

(B) Covering as provided in paragraphs (d)(3)(ii)(A) or (d)(4)(ii)(A) of this section shall be applied to all inactive asbestos mill tailings disposal sites or sections of such sites.

4. The first sentence in § 61.23 is revised as follows:

§ 61.23 Air-Cleaning.

If air-cleaning is elected, as permitted by §§ 61.22(f) and 61.22(d)(2)(iv), the requirements of this section must be met.

* * * * *

Subpart E—National Emission Standard for Mercury

5. Section 61.50 is revised to read as follows:

§ 61.50 Applicability.

The provisions of this subpart are applicable to those stationary sources which process mercury ore to recover mercury, use mercury chlor-alkali cells to produce chlorine gas and alkali metal hydroxide, and incinerate or dry wastewater treatment plant sludge.

6. Section 61.51 is amended by adding paragraphs (l) and (m) as follows:

§ 61.51 Definitions.

* * * * *

(l) "Sludge" means sludge produced by a treatment plant that processes municipal or industrial wastewaters.

(m) "Sludge dryer" means a device used to reduce the moisture content of sludge by heating to temperatures above 65°C (ca. 150°F) with combustion gases.

7. Section 61.52 is revised to read as follows:

§ 61.52 Emission standard.

(a) Emissions to the atmosphere from mercury ore processing facilities and mercury cell chlor-alkali plants shall not exceed 2,300 grams of mercury per 24-hour period.

(b) Emissions to the atmosphere from sludge incineration plants, sludge drying plants, or a combination of these that process wastewater treatment plant sludges shall not exceed 3,200 grams of mercury per 24-hour period.

8. Section 61.53 is amended by adding paragraph (d) as follows:

§ 61.53 Stack sampling.

* * * * *

(d) Sludge incineration and drying plants.

(1) Unless a waiver of emission testing is obtained under § 61.13, each owner or operator required to comply with § 61.52(b) shall test emissions from his source. Such tests shall be conducted either in accordance with the procedures set forth in paragraph (d) of this section or § 61.54.

(2) Method 101 in Appendix B to this part shall be used to test emissions as follows:

(i) The test shall be performed within 90 days of the effective date in the case of an existing source or a new source which has an initial startup date preceding the effective date;

(ii) The test shall be performed within 90 days of startup in the case of a new source which did not have an initial startup date preceding the effective date.

(3) The Administrator shall be notified at least 30 days prior to an emission test, so that he may at his option observe the test.

(4) Samples shall be taken over such a period or periods as are necessary to accurately determine the maximum emissions which will occur in a 24-hour period. No changes shall be made in the operation which would potentially increase emissions above the level determined by the most recent stack test, until the new emission level has been estimated by calculation and the results reported to the Administrator.

(5) All samples shall be analyzed, and mercury emissions shall be determined within 30 days after the stack test. Each determination shall be reported to the Administrator by a registered letter dispatched before the close of the next business day following such determination.

(6) Records of emission test results and other data needed to determine total emissions shall be retained at the source and made available, for inspection by the Administrator, for a minimum of 2 years.

9. Section 61.54 is added as follows:

§ 61.54 Sludge sampling.

(a) As an alternate means for demonstrating compliance with § 61.52(b), an owner or operator may use Method 105 of Appendix B and the procedures specified in this section.

(1) A sludge test shall be conducted within 90 days of the effective date in the case of an existing source or a new source which has an initial startup date preceding the effective date; or

(2) A sludge test shall be conducted within 90 days of startup in the case of a new source which did not have an initial startup date preceding the effective date.

(b) The Administrator shall be notified at least 30 days prior to a sludge sampling test, so that he may at his option observe the test.

(c) Sludge shall be sampled according to paragraph (c)(1) of this section. Sludge charging rate for the plant shall be determined according to paragraph (c)(2) of this section, and the sludge analysis shall be performed according to paragraph (c)(3) of this section.

(1) The sludge shall be sampled after dewatering and before incineration or drying, at a location that provides representative sample of the sludge that is normally charged to the incinerator or dryer. Eight consecutive grab samples shall be obtained at intervals of between 45 and 60 minutes and thoroughly mixed into one sample. Each of the grab samples shall have a volume of at least 200 ml but shall not exceed 400 ml. A total of three composite samples shall be obtained within an operating period of 24 hours. When the 24-hour operating period is not continuous, the total sampling period shall not exceed 72 hours after the first grab sample is taken. Samples shall not be exposed to any condition that may result in mercury contamination or loss.

(2) The maximum 24-hour sludge incineration or drying rate shall be determined by the use of a device that measures the mass rate of sludge entering the incinerator or dryer with an accuracy of ±5 percent over its operating range. Other methods of measuring sludge mass charging rates, approved by the Administrator, may be used.

(3) The handling, preparation, and analysis of sludge samples shall be accomplished according to Method 105 in Appendix B of this part.

(d) The mercury emissions shall be determined by use of the following equation:

$E_{Hg} = 1 \times 10^{-6} c Q$

where E_{Hg} = mercury emissions, g/day
c = mercury concentration of sludge on a dry solids basis, µg/g (ppm)
Q = sludge charging rate, kg/day

(e) No changes in the operation of a plant shall be made after a sludge test has been conducted which would potentially increase emissions above the level determined by the most recent stack test, until the new emission level has been estimated by calculation and the results reported to the Administrator.

(f) All sludge samples shall be analyzed for mercury content within 30 days after the sludge test has been completed. The Administrator shall be notified by registered letter dispatched before the close of the next business day following such determination.

(g) Records of emission test results and other data needed to determine total emissions shall be retained at the source and made available for inspection by the Administrator for a minimum of 2 years.

* * * * *

Appendix B [Amended]

10. Method 105 is added to Appendix B of [illegible]

METHOD 105—DETERMINATION OF MERCURY IN SLUDGE FROM WASTEWATER TREATMENT PLANTS

1. Principle and applicability. [illegible] sludge samples by the [illegible] for 2 minutes at 55°C, followed by digestion with potassium permanganate [illegible]

ASARCO ELP 0000719

cury in the digested sample is then measured by the conventional spectrophotometer cold vapor technique. An alternative digestion involving the use of an autoclave is described in paragraph 4.5.2 of this method.

1.2 Applicability—This method is applicable for the determination of total organic and inorganic mercury content in sewage, sludges, soils, sediments, and bottom-type materials. The normal range of this method is 0.2 to 5 μ g/g. The range may be extended above or below the normal range by increasing or decreasing the sample size and thereby increasing or decreasing the recorder response.

2. Summary. 2.1 Analysis. The procedure for this analysis (technique (5)) is [illegible] the sample.

2.1.1 Atomic Absorption Spectrophotometer—Single beam, single absorption unit [illegible] The sample preconcentration area [illegible] around the absorption cell is [illegible] Instrument settings recommended by the particular manufacturer should be followed.

2.1.2 Mercury Hollow Cathode Lamp—Westinghouse WL–22847, argon filled, or equivalent.

2.1.3 Recorder—Any multirange, variable-speed recorder that is compatible with the UV detection system is suitable.

2.1.4 Absorption Cell—Standard spectrophotometer cells 10 cm long, having quartz end windows may be used. Suitable cells may be constructed from plexiglass tubing, 2.5 cm O.D. x 11.4 cm (ca. 1" O.D. x 4½"). The ends are ground perpendicular to the longitudinal axis, and quartz windows [2.5 cm diameter x 0.16 cm thickness (ca. 1" diameter x ⅛" thickness)] are cemented in place. Gas inlet and outlet ports (also of plexiglass but 0.6 cm O.D. (ca. ¼" O.D.)] are attached approximately 1.3 cm (½") from each end. The cell is strapped to a burner for support and aligned in the light beam to give the maximum transmittance. [illegible]: Two 5.1 cm x 5.1 cm (ca. 2" x 2") [illegible] with 2.5 cm (ca. 1") diameter [illegible] may be placed over each end of the cell to assist in positioning the cell for maximum transmittance.

2.1.5 Air Pump—Any peristaltic pump capable of delivering 1 liter of air per minute may be used. A Masterflex pump with electronic speed control has been found to be satisfactory. (Regulated compressed air can be used in an open [illegible] system.)

2.1.6 Flowmeter—Capable of measuring an air flow of 1 liter per minute.

2.1.7 Aeration Tubing—Tygon tubing used for passage of the mercury vapor from the sample bottle to the absorption cell and return. Straight glass tubing terminating in a coarse porous frit is used for sparging air into the sample.

2.1.8 Drying Tube—15 cm long x 1.9 cm diameter (ca. 6" long x ¾" diameter) tube containing 20 grams of the desiccant magnesium perchlorate. The apparatus is assembled as shown in Figure 105–1. In place of the magnesium perchlorate drying tube, a small reading lamp with 60W bulb may be used to prevent condensation of moisture inside the cell. The lamp is positioned so as not to interfere with the measurement and to shine on the absorption cell maintaining the air temperature about 5°C above ambient.

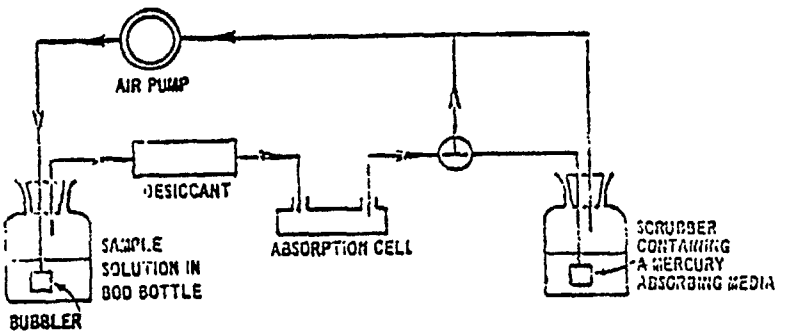

Figure 105-1. Apparatus for flameless mercury determination.

3. *Reagents.* 3.1 Analysis

3.1.1 Aqua Regia—Prepare immediately before use by carefully adding three volumes of concentrated HCl to one volume of concentrated HNO_3.

3.1.2 Sulfuric Acid, 0.5N—Dilute 14.0 ml of concentrated sulfuric acid to 1.0 liter.

3.1.3 Stannous Sulfate—Add 25 g stannous sulfate to 250 ml of 0.5N sulfuric acid. This mixture is a suspension and should be stirred continuously during use. A 10% solution of stannous chloride may be used in place of the stannous sulfate.

3.1.4 Sodium Chloride-Hydroxylamine Sulfate Solution—Dissolve 12 grams of sodium chloride and 12 grams of hydroxylamine sulfate in distilled water and dilute to 100 ml. Hydroxylamine hydrochloride may be used in place of the hydroxylamine sulfate.

3.1.5 Potassium Permanganate—5% solution, w/v. Dissolve 5 grams of potassium permanganate in 100 ml of distilled water.

3.1.6 Stock Mercury Solution—Dissolve 0.1354 grams of Bureau of Standards certified purity mercuric chloride in 75 ml of distilled water. Add 10 ml of concentrated nitric acid and adjust the volume to 100.0 ml. 1 ml = 1 mg. Hg.

3.1.7 Working Mercury Solution—Make successive dilutions of the stock mercury solution to obtain a working standard containing 0.1 μg per ml. This working standard and the dilutions of the stock mercury solution should be prepared fresh daily. Acidity of the working standard should be maintained at 0.15% nitric acid. This acid should be added to the flask as needed before the addition of the aliquot.

4. *Procedures.* Samples for mercury analysis are subject to contamination from a variety of sources. Extreme care must be taken to prevent contamination. Certain interferences may occur during the analysis procedures. Extreme caution must be taken to avoid inhalation of mercury.

4.1 Sample Handling and Preservation

4.1.1 Because of the extreme sensitivity of the analytical procedure and the omnipresence of mercury, care must be taken to avoid extraneous contamination. Sampling devices, sample containers, and reagents should be ascertained to be free of significant amounts of mercury; the sample should not be exposed to any condition in the laboratory that may result in contact or airborne mercury contamination.

4.1.2 While the sample may be analyzed without drying, it has been found to be more convenient to analyze a dry sample. Moisture may be driven off in a drying oven at a temperature of 60 C. No significant mercury losses have been observed by using this drying step. The dry sample should be pulverized and thoroughly mixed before the aliquot is weighed.

4.2 Interferences

4.2.1 Interferences that may occur in sludge samples are sulfides, high copper, high chlorides, etc.

4.2.2 Volatile materials which absorb at the 253.7 nm will cause a positive interference. In order to remove any interfering volatile materials, the dead air space in the BOD bottle should be purged with nitrogen before the addition of stannous sulfate.

4.3 Handling Sample Mercury Vapors After Analysis

4.3.1 Because of the toxic nature of mercury vapor, precaution must be taken to avoid its inhalation. Therefore, a bypass should be included in the analysis system to either vent the mercury vapor into an exhaust hood or pass the vapor through some absorbing media, such as:

[illegible] designed specifically for the measurement of mercury using the cold vapor technique are commercially available and may be substituted for the atomic absorption spectrophotometer.

ASARCO ELP 0000720

(a) Equal volumes of 0.1N $KMnO_4$ and 10% H_2SO_4

(b) 0.25% Iodine in a 3% KI solution

A specially treated charcoal that will absorb mercury vapor is also available from Barneby and Cheney, E. 8th Ave. and North Cassidy St., Columbus, Ohio 43219, Catalog No. 580–13 or No. 580–22.[2]

4.4 Calibration

4.4.1 Transfer 0, 0.5, 1.0, 2.0, 5.0 and 10 ml aliquots of the working mercury solution containing 0 to 1.0 μg of mercury to a series of 300-ml BOD bottles. Add enough distilled water to each bottle to make a total volume of 10 ml. Add 5 ml of sulfuric acid and heat 2 minutes in a water bath at 95°C. Allow the samples to cool and add 50 ml distilled water and 15 ml of $KMnO_4$ solution to each bottle. Return to the water bath for 30 minutes. Cool and add 6 ml of sodium chloride-hydroxylamine sulfate solution to reduce the excess permanganate. Add 50 ml of distilled water. Treating each bottle individually, add 5 ml of stannous sulfate solution and immediately attach the bottle to the aeration apparatus. At this point, the sample is allowed to stand quietly without manual agitation. The circulating pump, which has previously been adjusted to a rate of 1 liter per minute, is allowed to run continuously. The absorbance, as exhibited either on the spectrophotometer or the recorder, will increase and reach maximum within 30 seconds. As soon as the recorder pen levels off, approximately 1 minute, open the bypass valve and continue the aeration until the absorbance returns to its minimum value. Close the bypass valve, remove the fritted tubing from the BOD bottle and continue the aeration. Proceed with the standards and construct a standard curve by plotting peak height versus micrograms of mercury.

4.5 Analysis

4.5.1 Weigh triplicate 0.2 g ±0.001 g portions of dry sample and place in bottom of a BOD bottle. Add 5 ml of distilled water and 5 ml of aqua regia. Heat 2 minutes in a water bath at 95°C. Cool and add 50 ml distilled water and 15 ml potassium permanganate solution to each sample bottle. Mix thoroughly and place in the water bath for 30 minutes at 95°C. Cool and add 6 ml of sodium chloride-hydroxylamine sulfate to reduce the excess permanganate. Add 55 ml of distilled water. Treating each bottle individually, add 5 ml of stannous sulfate and immediately attach the bottle to the aeration apparatus. With each sample, continue as described in paragraph 4.4.1 of this method.

4.5.2 An alternative digestion procedure using an autoclave may also be used. In this method of 5 ml of concentrated H_2SO_4 and 2 ml of concentrated HNO_3 are added to the 0.2 grams of sample. 5 ml of saturated $KMnO_4$ solution are added and the bottle is covered with a piece of aluminum foil. The samples are autoclaved at 121°C and 2.1 kg/cm² (ca. 15 psig) for 15 minutes. Cool, make up to a volume of 100 ml with distilled water, and add 6 ml of sodium chloride-hydroxylamine sulfate solution to reduce the excess permanganate. Purge the dead air space and continue as described in paragraph 4.4.1 of this method.

[2] Mention of trade names or specific products does not constitute endorsement by the Environmental Protection Agency.

5. *Calculation.* 5.1 Measure the peak height of the unknown from the chart and read the mercury value from the standard curve.

5.2 Calculate the mercury concentration in the sample by the formula:

$$\mu g\ Hg/gm = \frac{\mu g\ Hg \text{ in the aliquot}}{\text{wt. of the aliquot in g}}$$

5.3 Report mercury concentrations as follows: Below 0.1 μg/g; between 0.1 and 1 μg/g, to the nearest 0.01 μg/g; between 1 and 10 μg/g, to nearest 0.1 μg; above 10 μg/g, to nearest μg.

6. *Precision and accuracy.* 6.1 According to the provisional method in reference number 5, the following standard deviations on replicate sediment sample have been recorded at the indicated levels: 0.29 μg/g ±0.02 and 0.32 μg/g ±0.03. Recovery of mercury at these levels, added as methyl mercuric chloride, was 97 and 94 percent, respectively.

7. *References*

1. Bishop, J. N. "Mercury in Sediments," Ontario Water Resources Comm., Toronto, Ontario, Canada, 1971.

2. Salma, M. Private communication. EPA Cal/Nev Basin Office, Alameda, California.

3. Hatch, W. R., and Ott, W. L. "Determination of Sub-Microgram Quantities of Mercury by Atomic Absorption Spectrophotometry," Anal. Chem. 40, 2085 (1968).

4. Bradenberger, H. and Bader, H. "The Determination of Nanogram Levels of Mercury in Solution by a Flameless Atomic Absorption Technique," Atomic Absorption Newsletter 6, 101 (1967).

5. Analytical Quality Control Laboratory (AQCL), Environmental Protection Agency, Cincinnati, Ohio. "Mercury in Sediment (Cold Vapor Technique)," Provisional Method, April 1972.

[FR Doc.74-24252 Filed 10-24-74;8:45 am]

ASARCO ELP 0000721