Winslow Boiler & Engineering Co.

Builders of Oil Burners

CHICAGO	NEW YORK	GALESBURG
844 Rush St.	Show Room: 46 E. 41st St.	Illinois

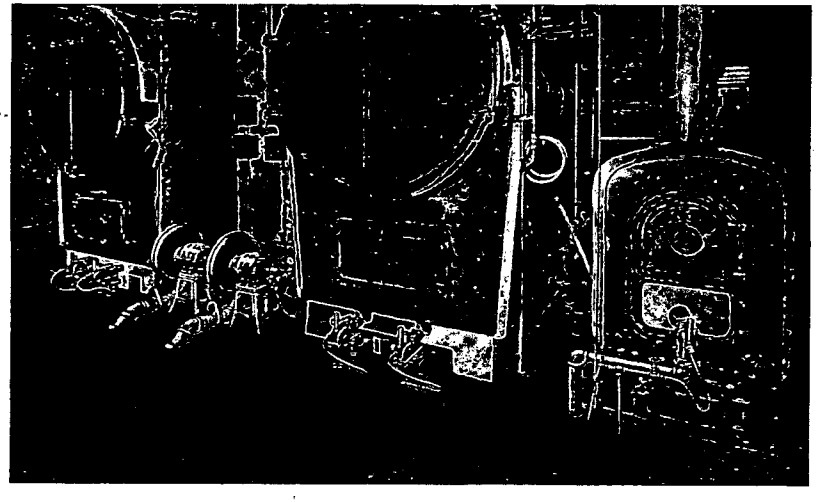

A WINSLOW INDUSTRIAL BURNER installation consists of a motor-blower unit and a burner nozzle assembly.

The motor blower unit may be located at any convenient point near the boilers and connected to the burner assembly, in front of the boilers, by oil and air piping of correctly proportioned sizes.

The pump pulls the oil from the storage tank and delivers it at from 7 to 10 lb. pressure to the burners. At the same time the blower is supplying the required air at low pressure, measured in ounces, to effect a thorough atomization of the oil. This burner is complete with a strainer, pressure gage, check valve, oil relief valve, motor, blower and pump unit.

Single motor blower units handle a variety of burner assemblies. Where dual units are twinned the capacities are not only doubled but the plant is insured against any shut down. There are several sizes of motor blower units and also of burners.

In specifying burners determine whether the boilers are to carry an overload. Ordinarily, steel boilers can be provided with burners rated at the boiler rating unless overloads are contemplated. On the other hand, cast iron boilers can usually be provided with burners rated at about 70 per cent of the boiler rating. This is due to the different methods of rating steel and cast iron boilers.

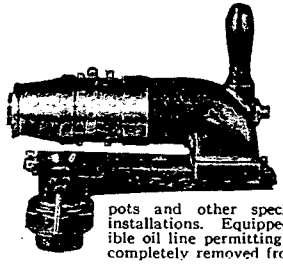

Sliding Type

The sliding type burner is particularly adapted to bake ovens, lead melting pots and other special industrial installations. Equipped with a flexible oil line permitting burner to be completely removed from slide base.

Wherever possible specify two smaller burner nozzles even though one large one will do the work, so as to assure an easier control of fuel consumption. Frequently both burner nozzles will be used to build up steam pressure and then one can be cut off entirely. Where loads are apt to be variable the double burner nozzle is ideal.

The cut to the right shows the efficient method of attaining atomization. The oil travels down the central tube and impinges onto the rotating disc. It whirls centrifugally and strikes the heel of the revolving cup in a thin film. It then travels along the inner wall of the cup to the rim where it is whirled off at tremendous speed, mixing with the air from the barrel and entering the boiler perfectly atomized.

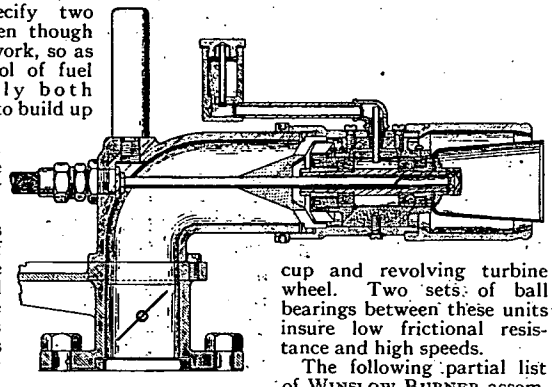

The cut also shows the balanced rotating cup and revolving turbine wheel. Two sets of ball bearings between these units insure low frictional resistance and high speeds.

The following partial list of WINSLOW BURNER assemblages will be of assistance in determining correct sizes for a large scope of work. The ratings in column five are based on 100 sq. ft. of steam radiation per horsepower and represent the total load the burner can handle.

Designation	Motor Blower Unit	No. and Size Burners	Maximum Steam Radiation	Approximate Motor Unit Floor Space	Approximate Shipping Weight	H. P.	Pump	Air
Alexander	B-60	1 T 10	3500	24″ x 24″	290 lbs.	½	⅜″	2″
Amos	B-60	2 T 10	5000	24″ x 24″	265 lbs.	½	⅜″	2″
Anthony	B-60	1 T 30	5000	24″ x 24″	280 lbs.	½	⅜″	2″
Austin	B-60	2 T 30	7500	24″ x 24″	285 lbs.	½	⅜″	2″
Barney	B-90	3 T 10	9500	24″ x 24″	300 lbs.	1	⅜″	2″
Benjamin	B-90	3 T 30	11,000	24″ x 24″	315 lbs.	1	⅜″	2″
Bernard	B-90	2 T 30	10,000	24″ x 24″	290 lbs.	1	⅜″	2″
Blaine	B-90	2 T 40	12,000	24″ x 24″	305 lbs.	1	⅜″	2″
Carl	B-120	1 T 70	10,000	24″ x 24″	310 lbs.	1½	⅜″	2½″
Charles	B-120	4 T 10	11,000	24″ x 24″	320 lbs.	1½	⅜″	2½″
Curtis	B-120	3 T 30	14,000	24″ x 24″	330 lbs.	1½	⅜″	2½″
Daniel	B-180	5 T 10	14,000	28″ x 28″	365 lbs.	2	½″	2½″
David	B-180	4 T 30	20,000	28″ x 28″	355 lbs.	2	½″	2½″
Dean	B-180	3 T 40	22,000	28″ x 28″	370 lbs.	2	½″	2½″
Delbert	B-180	2 T 70	22,000	28″ x 28″	365 lbs.	2	½″	2½″
Earl	B-300	8 T 10	20,000	28″ x 28″	400 lbs.	3	½″	3″
Edward	B-300	6 T 30	24,000	28″ x 28″	425 lbs.	3	½″	3″
Elmer	B-300	5 T 40	30,000	28″ x 28″	455 lbs.	3	½″	3″
Eugene	B-300	4 T 70	34,000	28″ x 28″	460 lbs.	3	½″	3″
Frank	B-500	1 T 250	25,000	28″ x 28″	550 lbs.	5	½″	3″
Fred	B-800	2 T 250	50,000	28″ x 28″	650 lbs.	5	½″	3″

In addition to the WINSLOW INDUSTRIAL burner described here the Winslow Boiler & Engineering Company manufacturers a complete line of fully automatic, residential and apartment house burners.

The electric ignition KLEEN-HEET burners, with the vacuum oil feed eliminating the usual basement auxiliary tank, are built in several sizes and are thus suitable for a great range of work.

The KLEEN-HEET GJ gas ignition burners, without the vacuum feed but completely automatic in operation, are in four sizes. The No. 10 is rated at one thousand feet hot water and is suitable for the average home. The No. 6 is especially adapted to Arcolas and small domestic water heaters.

Inquiries to the INDUSTRIAL DIVISION of the WINSLOW BOILER AND ENGINEERING COMPANY, 844 Rush Street, Chicago, Illinois, will be promptly answered.