POWER FACTOR CELL

Fig. 4

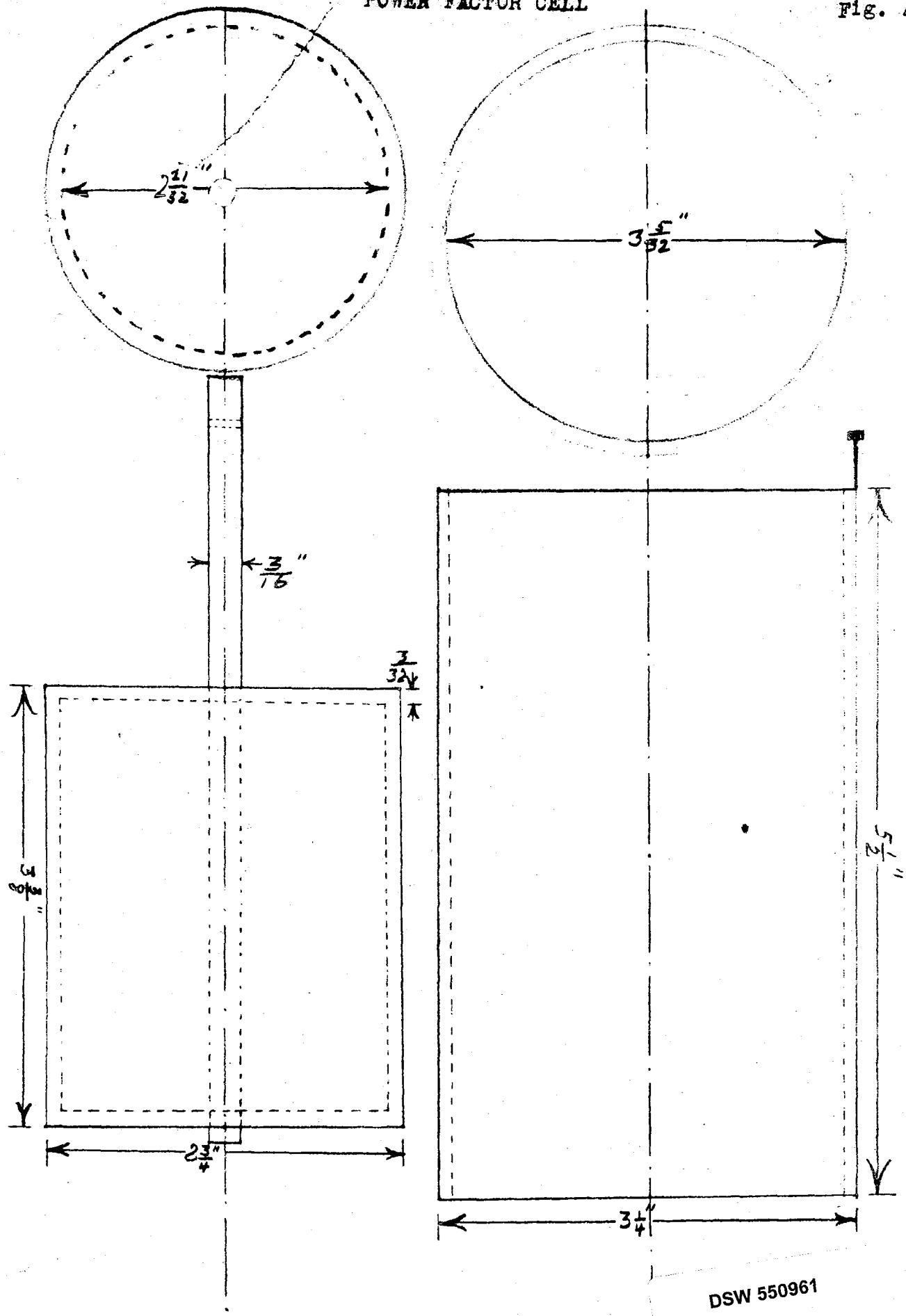

DSW 550961

STLCOPCB4089378