PLAINTIFF'S EXHIBIT

CT-377

TECHNICAL SPECIFICATIONS

CERTAIN-TEED PRODUCTS CORPORATION
PIPE DIVISION

CERTAIN

SPECIFICATIONS CLASSIFICATION
Standard Purchasing Specification

T. C. O. REF. NO.	SPECIFICATION NO.	PAGE NO.
2	525	1

SUPERSEDES: June 24, 1968

DATE OF ISSUE: OCT 10 1973

DESCRIPTION

Protective Caplugs for Threaded Brass Inserts

1.0 General

This purchasing specification states the requirements for material, dimensions, and workmanship requirements for caplugs used in threaded brass inserts.

2.0 Use

The caplugs prevent epoxy bonding agent from entering the inside threads of the inserts when the inserts are being fastened inside the holes drilled into the A/C. Caplugs also prevent dirt, grit etc. from entering the inserts during storage and shipment. A further aid is color coding to identify the inserts -- all AWWA inserts will have yellow caplugs and all NPT inserts will have red caplugs.

3.0 Material

Caplugs shall be made from a high density polyethylene and meet the requirements of Allied Chemicals molding grade SS 50-035, or equivalent.

4.0 Conformance

Caplugs for 3/4" and 1" AWWA and 1-1/2" NPT shall conform to the dimensions shown in Figures I and II of this specification. 3/4" and 1" NPT caplugs shall be standard commercial purchases.

5.0 Packaging

The caplugs shall be packaged such that each package will contain only one size and type. The package shall be clearly marked as to its contents.

CTD015045

PREPARED BY:	APPROVED BY:	R & D	MFG.	SALES	I.E.	OTHERS

CONFIDENTIAL DOCUMENT - NOT TO BE DISTRIBUTED TO UNAUTHORIZED PERSONNEL

FORM P927

TECHNICAL SPECIFICATIONS

CERTAIN-TEED PRODUCTS CORPORATION
PIPE DIVISION

CERTAIN

SPECIFICATIONS CLASSIFICATION: Standard Purchasing Specification

T.C.O. REF. NO.	SPECIFICATION NO:	PAGE NO.
?	525	2

SUPERSEDES: June 24, 1968

DATE OF ISSUE: OCT 10 1973

DESCRIPTION:

Protective Caplugs for Threaded Brass Inserts

6.0 Marking

Sizes 3/4" and 1" AWWA and 1-1/2" NPT shall be shown on the caplug along with CPC. Sizes 3/4" and 1" NPT are standard commercial items and as such are not marked.

7.0 Special

The 2" NPT inserts will use the present caplug and it is to be red in color. It shall be in accordance with the dimensions as shown in Table A and Figure III.

8.0 Inspection

The criteria for inspection is that the caplugs perform functionally in service. This is the only inspection necessary.

CTD015046

PREPARED BY:	APPROVED BY:	R & D	MFG.	SALES	I.E.	OTHERS

CONFIDENTIAL DOCUMENT - NOT TO BE DISTRIBUTED TO UNAUTHORIZED PERSONNEL

TECHNICAL SPECIFICATIONS

CERTAIN TEED PRODUCTS CORPORATION
PIPE DIVISION

CERTAIN

SPECIFICATIONS CLASSIFICATION:
Standard Purchasing Specification

T C O REF NO.	SPECIFICATION NO	PAGE NO
2	525	3

SUPERSEDES	DATE OF ISSUE
June 24, 1968	OCT 10 1973

DESCRIPTION

Protective Caplugs for Threaded Brass Inserts

FIGURE I $1\frac{1}{4}$" & $1\frac{1}{2}$" NPT

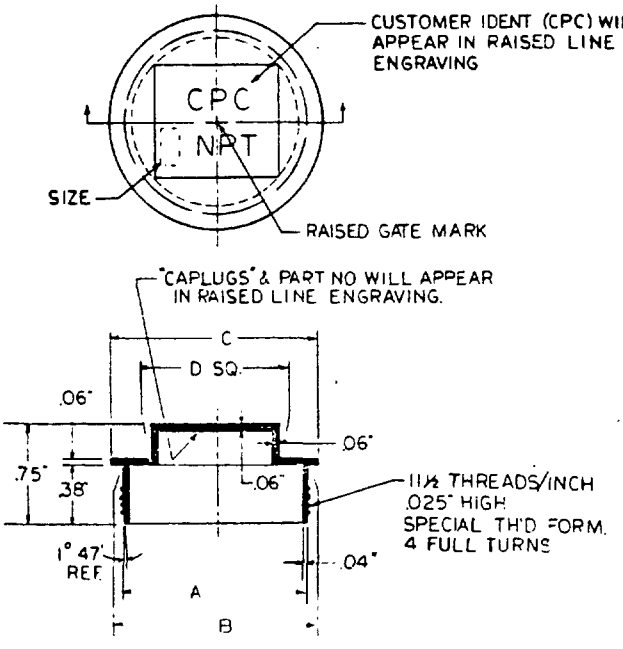

Recommended Vendor Caplugs Part No.	Insert Size & Thread Type	A" ± .010"	B" ± .010"	C" ± .020"	D" sq. +.000 -.030
P-68H	3/4"NPT				
P-88H	1" NPT				
B860/08	$1\frac{1}{4}$"NPT	1.486	1.510	1.63	1.00
B860/28	$1\frac{1}{2}$"NPT	1.725	1.749	1.87	1.25

CTD015047

To be Red in Color

PREPARED BY:

APPROVED BY:

R & D	MFG.	SALES	I.E.	OTHERS

CONFIDENTIAL DOCUMENT - NOT TO BE DISTRIBUTED TO UNAUTHORIZED PERSONNEL

TECHNICAL SPECIFICATIONS

FORM 1427

CERTAIN-TEED PRODUCTS CORPORATION
PIPE DIVISION

SPECIFICATIONS CLASSIFICATION:
Standard Purchasing Specification

T.C.O. REF. NO.	SPECIFICATION NO.	PAGE NO.
2	525	4

SUPERSEDES: June 24, 1968

DATE OF ISSUE: OCT 10 1973

DESCRIPTION:

Protective Caplugs for Threaded Brass Inserts

FIGURE II 3/4" & 1" AWWA

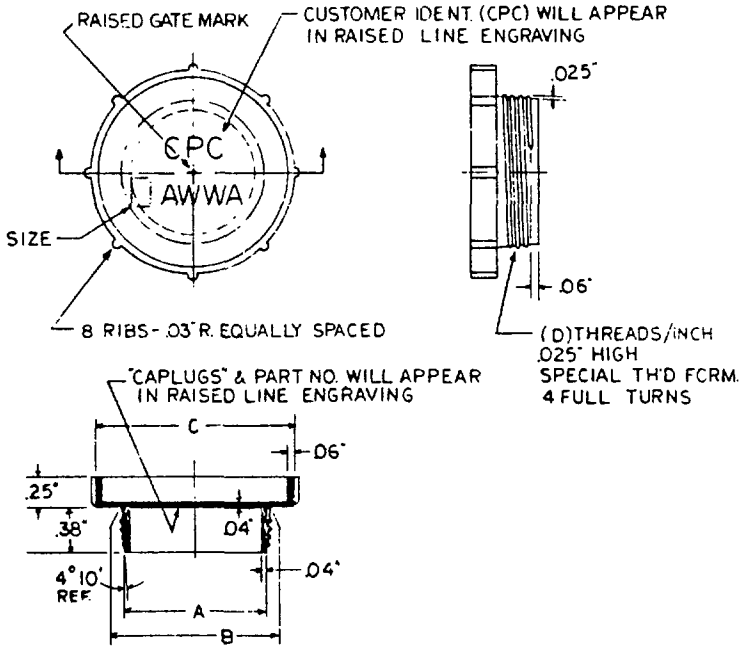

Recommended Vendor Caplugs Part No.	Insert Size & Thread Type	A" ±.010	B" ±.010	C" ±.020	D Number of threads per inch
B858-1	3/4"AWWA	1.087	1.142	1.50	14
3858-2	1" AWWA	1.305	1.360	1.75	12

To be Yellow in Color

CTD015048

PREPARED BY:	APPROVED BY:	R & D	MFG.	SALES	I.E.	OTHERS

CONFIDENTIAL DOCUMENT - NOT TO BE DISTRIBUTED TO UNAUTHORIZED PERSONNEL

TECHNICAL SPECIFICATIONS

FORM F527

CERTAINTEED

CERTAIN-TEED PRODUCTS CORPORATION
PIPE DIVISION

SPECIFICATIONS CLASSIFICATION:		
Standard Purchasing Specification		
T.C.O. REF. NO. 2	SPECIFICATION NO: 525	PAGE NO.: 5
SUPERSEDES: June 24, 1968		DATE OF ISSUE: OCT 10 1973

DESCRIPTION:

Protective Caplugs for Threaded Brass Inserts

FIGURE III 2" NPT

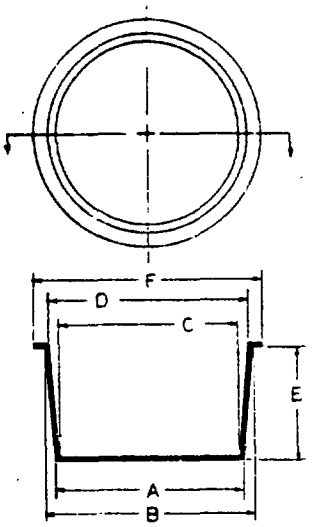

NOTE: 1. Wall thickness is 1/32"
2. "B" dimension must be at least .020" larger than hole to be plugged.

Recommended Vendor Caplugs Part No.	Insert Size & Thread Type	A" ±.03	B" ±.03	C" ±.03	D" +.03 -.00	E" ±.03	F" ±.03
24S	2"NPT	2.23	2.26	2.168	2.198	.50	2.50

CTD015049

To be Red in Color

PREPARED BY:	APPROVED BY:	R & D	MFG.	SALES	I.E.	OTHERS
[signature]	[signature]	[signature]	[signature]			[signature]

CONFIDENTIAL DOCUMENT - NOT TO BE DISTRIBUTED TO UNAUTHORIZED PERSONNEL

TECHNICAL SPECIFICATIONS

FORM 1927

CERTAINTEED PRODUCTS CORPORATION
PIPE DIVISION

CERTAINTEED

SPECIFICATIONS CLASSIFICATION: Standard Purchasing Specification		
T.C.O. REF. NO.	SPECIFICATION NO:	PAGE NO
2	525 Addendum	1
SUPERSEDES: June 24, 1968		DATE OF ISSUE: OCT 10 1973

DESCRIPTION:

Protective Caplugs for Threaded Brass Inserts

NOT TO BE DISTRIBUTED TO VENDORS

1.0 Recommended vendor and its address is as follows:

1.1 Protective Closures Co.
Caplugs Division
2166 Elmwood Avenue
Buffalo, NY 14207

CTD015050

PREPARED BY:	APPROVED BY:	R & D	MFG.	SALES	I.E.	OTHERS
CJC	JH					D.D.

CONFIDENTIAL DOCUMENT - NOT TO BE DISTRIBUTED TO UNAUTHORIZED PERSONNEL