DIRECTIONS FOR APPLYING

SIL-O-ETT* ASBESTOS CEMENT SIDING SHINGLES

PLAINTIFF'S EXHIBIT

USG-1469

No. 150 (punched—unshadowed)

No. 250 (punched for face nail application)

No. 350 (unpunched for use with SHADOW-LOCK* attachment system)

PREPARATION OF SIDE WALLS—The wall surfaces to be covered should be as smooth and even as possible. On new work shingles should be applied only over dry sheathing boards. Temporarily flash over uncompleted work so moisture cannot get behind shingles.

On re-siding work all old warped boards should be nailed into place. If applied over old wood shingles, it is necessary to apply bevel wood nailing strips to bring surface out in line with the vertical of the wall. These nailing strips should be on 11" centers for No. 150, 250, and 350. When applying Asbestos Shingles over brick or stone walls horizontal nailing strips should be similarly spaced. For applying over old stucco, best practice calls for removing old stucco and applying shingles directly to the wood sheathing. Before application of the siding shingles, we recommend walls be covered with a layer of USG Asphalt Felt, or similar breather type material before applying the shingles. As an alternative, such "breather" type under-layments as Silvercote may be used but we do not recommend the use of such absolute vapor barrier products as aluminum foil for this purpose. When such foil type product is used, we cannot assume responsibility for improper performance of the siding shingles.

READ CAREFULLY—IMPORTANT—It is important that Asbestos Cement Shingles be stored in a dry place. Bundles stored outside should be stacked on planks and provided with a waterproof covering to avoid any moisture reaching shingles in the bundle. Do not apply shingles over a wet surface. Improper storage resulting in wet shingles in bundles or applying shingles over wet sheathing may cause lime bloom to appear on the surface. Lime bloom will eventually disappear due to natural weathering. If desired, bloom may be washed away after it has reached maximum migration. See detailed instructions below. **Lime bloom is an inherent characteristic of Asbestos Cement Shingles under certain conditions and is beyond our control and we cannot be responsible should this condition occur.**

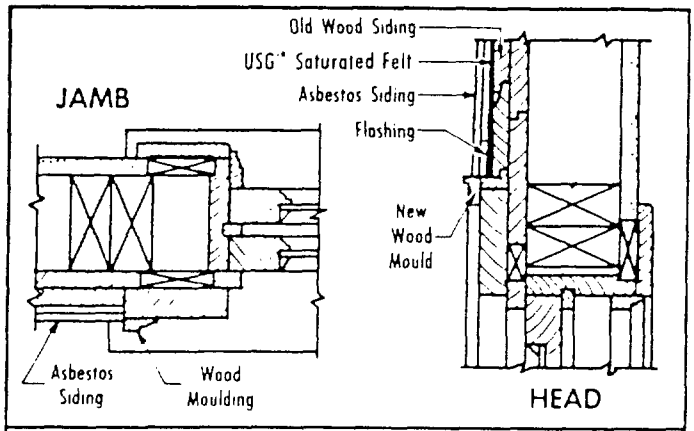

DETAIL No. 31

PROCEDURE FOR WASHING—Mix one pint of Commercial muriatic acid (obtainable at drug or hardware stores) with 19 pints of water. This is a relatively weak solution and similar to the concentration used to wash "bloom" off bricks. When handling the acid, however, protective eye goggles and rubber gloves should be worn. Mix the acid and water in a porcelain, wooden, or glass container.

Start at the bottom of the area from which the "bloom" is to be removed, thoroughly apply this acid solution with a soft bristle scrub brush, scrubbing with an up and down motion. By starting at the bottom, areas of bloom still to be washed will not be hidden by wetting the surface of the shingle. Scrub only an area about 5 ft. by 5 ft., then rinse thoroughly with a slow stream (avoid spattering, splashing, etc.) of water from the garden hose. Be sure to rinse off any painted areas, window, frames, walks, stoops, floors, etc. Shrubbery, flowers, etc. should be protected from the acid solution by coverings such as canvas or building paper. Window screens should also be removed before starting acid wash.

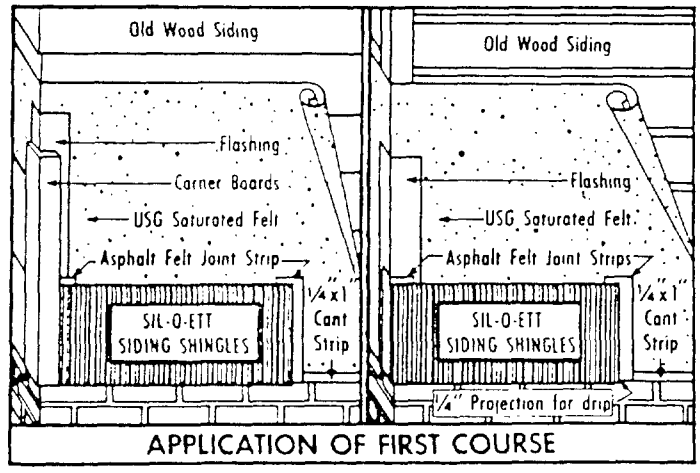

DETAIL No. 51

CAULKING—All door and window frames should be adequately caulked with USG Asbestos Caulking Cement applied with a pressure gun.

BB017 2219

*T.M. Reg. U.S. Pat. Off.

OUTSIDE AND INSIDE CORNERS—Several methods of finishing corner joints may be used. Shingles may be butted against existing corner boards or new corner boards installed. Bull Nose corner bead, or other metal corners are sometimes used. Many outside corners are formed by weaving or "lacing" alternate courses of shingles, lining up the edges of corner shingles at each course with the faces of the two walls alternately, so a single line will not be formed. When this is done, edges should be brought down to a close fit with a rasp. See detail No. 52.

Both inside and outside corners should be flashed with heavy asphalt felt or metal flashing strips to provide a true corner and additional weather protection. See details No. 51 and No. 52.

CUTTING AND PUNCHING—SIL-O-ETT Siding Shingles are furnished die cut, with clean, sharp edges. Where it is necessary to cut shingles on the job, both for the sake of a finished job, and because it is quicker, it is recommended that an asbestos shingle cutter be used. It is in fact almost indispensable. Such shingle cutters with a 27½" or 32" blade are regularly provided with a punch for punching holes for nails, and a notching device for cutting irregular shapes to fit around window sills. These cutters can be easily obtained from our dealers.

Where shingle cutters are not available, shingles may be scored with a sharp instrument, and snapped over a straight edge.

FIRST COURSE—Apply ¼" x 1" cant strip or wood furring strip along the bottom of the wall. Snap a level chalk line 11¾" above the bottom of this cant strip. Shingles in the first course should be laid with the top edge along this chalk line, thus insuring a straight level base line, and permitting the shingle to overhang the cant strip ¼", forming a proper drip edge. Apply a joint strip folded vertically at the corner. See detail No. 51. Start the application of the first course with a full size shingle, extending the butt ¼" below the cant strip to form a drip edge. Secure the shingle by nailing the first and middle special face nails at the butt edge of the shingle, being careful that the top of the shingle runs true to the chalk line. Drive the nails snugly, but do not drive them home. Before nailing at the opposite end insert a joint strip beneath the shingle so that the strip centers under the vertical joint of this shingle and the next shingle to be laid. Securely nail the third face nail in the shingle and continue application of subsequent shingles in a similar manner, placing an asphalt joint strip under each joint.

Butts of shingles are to be secured with special face nails, driven through the holes provided. These special face nails have small heads that will not show up prominently, and are made to the exact size of the holes.

It is important in nailing that you nail across the shingle—never nail both ends and then the center.

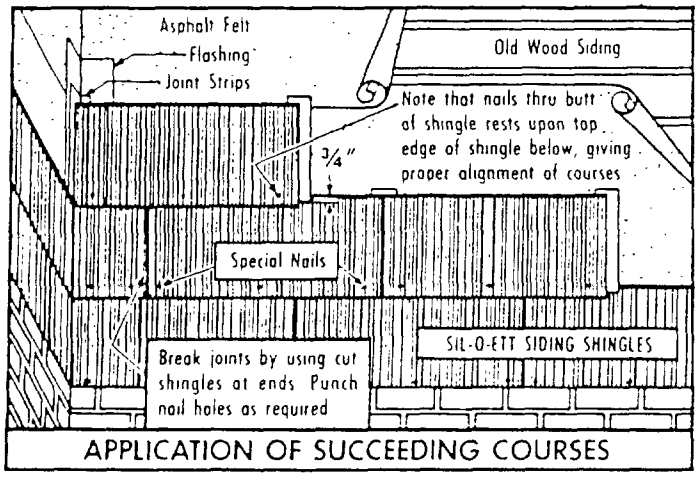

APPLICATION OF SUCCEEDING COURSES

DETAIL No. 52

SECOND AND SUCCEEDING COURSES—Apply a folded joint strip at the corner as in the first course, providing a one inch lap of the strip over the first course shingle. See detail No. 52. Cut a full size shingle to provide for staggered joint application. Always use two holes in the butt of any piece of shingle, punching new holes if necessary. Note: Shingles can be aligned for proper exposure by inserting two nails in the holes at the butt of the shingle allowing the inserted nails to rest upon the top of the under-lying shingle. Insert a joint strip at each vertical joint as before described with the end coming one inch down over the lower course. Continue application with full size shingles, being careful to make tight joints.

Complete succeeding courses as described, breaking vertical joints in alternating courses.

Where rust-proof nails are exposed as under windows, apply additional wood moulding to cover same.

OVER GYPSUM OR INSULATING SHEATHING—When applying SIL-O-ETT Asbestos Cement Shingles over this type of sheathing, the USG SHADOW-LOCK System is recommended using #350 unpunched shingles. See detail No. 4.

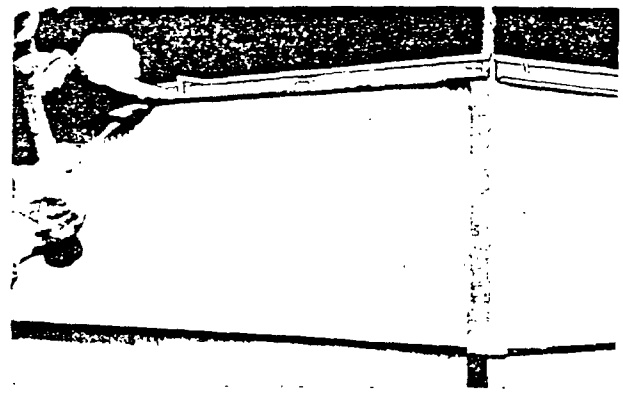

DETAIL No. 4—SHADOW-LOCK* SYSTEM

This method of attachment creates a deeper and more beautiful shadow line than obtainable with usual application. The top leg of the channel is placed over the top edge of the preceding course of siding and secured with the hook-head type SHADOW-LOCK* Nails driven into each stud. Succeeding courses of siding are inserted into the channels and the process repeated. Exterior corners are finished with SHADOW-LOCK Corners. Crimp Back SHADOW-LOCK Channels are 8' long and 1" wide, packaged 125 pieces (1,000 lin. ft.) per carton. Estimate 103 lin. ft. per square. SHADOW-LOCK Corners are 11½" long and packaged 50 corners per carton. One carton of corners is ample for the average one story house. SHADOW-LOCK Nails are 12 gauge galvanized 1¾" long, with a diamond point, and ⅝" hook-head. Packaged in 5 lb. cartons. Nail count approximately 178 per lb. Estimate ½ lb. nails per square of shingles.

OVER PLYWOOD SHEATHING—When applying USG Asbestos Cement Shingles over Plywood Sheathing, a 1¼" 0.114 Shank Screw Thread Aluminum Nail is recommended.

UNITED STATES GYPSUM

The Greatest Name in Building

BB017 2220

*T.M. Reg. U S. Pat. Off.