PLAINTIFF'S EXHIBIT

CT-444

TECHNICAL SPECIFICATIONS

CertainTeed

CertainTeed Corporation
Pipe and Plastics Group

SPECIFICATIONS CLASSIFICATION: A/C Standard Product Specification		
T.C.O. REF. NO. 3	SPECIFICATION NO: 16	PAGE NO.: 1
SUPERSEDES: March 1, 1978	DATE OF ISSUE: NOV 8 1979	

DESCRIPTION:

WELL CASING - Johnson Well Casing Company

1.0 General

Well casing pipe is manufactured in 12 and 16 inch sizes for the Johnson Well Casing Company, Hastings, Nebraska. The pipe has square cut ends. Circumferential grooves are cut on the B.O.D. of the pipe which are used as a means of anchoring a metal collar which joins the ends of the pipe as they are being lowered into the well. The pipe in the lower third (approx.) of the well have slots cut in the wall of the pipe to aid in collecting the underground water. Because of the way this pipe is used, the dimensional and physical properties specified in this specification are considered critical.

2.0 Composition

Well casing pipe shall be composed of an intimate mixture of portland cement, asbestos fibers and silica. The material shall be of laminar construction formed under pressure to a homogenous structure and cured to meet the physical and chemical requirements of this specification. The pipe shall be free of organic additives.

3.0 Type

The pipe shall be Type II where use in highly agressive water, or soil and water, of high sulfate content or both can be tolerated.

4.0 Physical Requirements

4.1 Appearance

4.1.1 The I.D. shall be free from dents or tears that result in a variation in diameter of more than 3/16 inch from the diameter of the adjacent unaffected portion. No water marks are allowed.

4.1.2 Some external denting is allowed on the outside (B.O.D.) of the pipe providing there are no cracks connected with the dents.

4.1.3 Pipe ends shall be cut clean. Some chipping is allowed providing they do not extend into the groove area. Also, the chips should not be deeper than 3/16 inch.

CTD015467

PREPARED BY:	APPROVED BY:	R & D	MFG.	SALES	I.E.	OTHERS

TECHNICAL SPECIFICATIONS

CertainTeed

CertainTeed Corporation
Pipe and Plastics Group

SPECIFICATIONS CLASSIFICATION: A/C Standard Product Specification		
T.C.O. REF. NO. 3	SPECIFICATION NO: 16	PAGE NO.: 2
SUPERSEDES: March 1, 1978	DATE OF ISSUE: NOV 8 1978	

DESCRIPTION:

WELL CASING - Johnson Well Casing Company

4.2 Crushing Strength

Each pipe shall be capable of withstanding a crushing strength of 1500 lbs./ft. min.

Standard Test - One crush test every 300 pipe.

5.0 Chemical Requirements

Uncombined Calcium Hydroxide shall be 1.0 max. when tested in accordance with ASTM C-500.

6.0 Dimensions

6.1 I.D. - Standard Lengths

The ovality of the I.D. is to be measured as a control on the ovality of the O.D. (There is a very close correlation) The ovality is the total ovality allowed and cannot exceed .250 inches. The ovality is to be measured by using an inside dial micrometer, accurate to .001 inch. The ovality is measured one inch from the ends of the pipe. The micrometer is to pass through the center axis of the pipe, the maximum and minimum points are to be found. (See Figure #3)

The ovality is calculated by:

I.D. Max - I.D. Min.

6.1.1 When the ovality, as measured in Paragraph 6.1, exceeds .250 inches but not more than .375 inches the manufacturing plant shall have the option of machining full and random length pipe ends to bring the pipe within the ovality tolerances allowed, providing the machining does not exceed .125 inches from the B.O.D. The pipe ends shall be machined as shown in Figure No. 2 and must meet the B.O.D. requirements. Machined pipe ends shall be measured for ovality by using flat face Calipers, as shown in Figure #4. Both ends must be machined.

Ovality is calculated by

Machined B.O.D. max. - Machined B.O.D. min.

CTD015468

PREPARED BY:	APPROVED BY:	R & D	MFG.	SALES	I.E.	OTHERS

TECHNICAL SPECIFICATIONS

CertainTeed

CertainTeed Corporation
Pipe and Plastics Group

SPECIFICATIONS CLASSIFICATION: A/C Standard Product Specification		
T.C.O. REF. NO. 3	SPECIFICATION NO: 16	PAGE NO.: 3
SUPERSEDES: March 1, 1978	DATE OF ISSUE: NOV 8 1978	

DESCRIPTION:

WELL CASING - Johnson Well Casing Company

6.1.2 The total footage of random lengths and machined full lengths shall not exceed 10% of the total footage shipped against one order. (Machined pipe ends are limited to full lengths only.)

6.2 B.O.D. - Unmachined Pipe

The B.O.D. is to be measured on one end of each pipe using an O.D. tape. The measurement shall be made 1-½ to 2 inches from end of pipe. Each measurement taken shall be marked on the pipe.

6.3 Squareness - All Pipe

Each end of the pipe shall be cut square. The maximum allowed on the pipe wall is 1/32 inch total.
The maximum allowed across the entire pipe is 1/16 inch.
Squareness shall be measured by using a 90° square with one portion placed on the pipe B.O.D. (See Figure #5 a, b, and c)

6.4 Pipe Lengths

Pipe lengths shall be:

Standard Length	13' + 0" - 1"	
Randoms	12' + 0" - 1"	8' + 0" - 1"
	11' + 0" - 1"	7' + 0" - 1"
	10' + 0" - 1"	6'6" + 0" - 1"
	9' + 0" - 1"	

The length of each random pipe shall be marked on the pipe.

7.0 Marking

Each pipe shall be stencilled in black ink at the center of the pipe.

CERTAIN-TEED (size)
JOHNSON WELL CASING CO.
HASTINGS, NEBRASKA

CTD015469

Production Code to be located 10" from end of pipe on Standard Length.
May or may not appear on Random lengths.

PREPARED BY:	APPROVED BY:	R & D	MFG.	SALES	I.E.	OTHERS

TECHNICAL SPECIFICATIONS

CertainTeed CertainTeed Corporation Pipe and Plastics Group	SPECIFICATIONS CLASSIFICATION: A/C Standard Product Specification		
	T.C.O. REF. NO.: 3	SPECIFICATION NO: 16	PAGE NO.: 4
	SUPERSEDES: March 1, 1978		DATE OF ISSUE: NOV 8 1978

DESCRIPTION:

WELL CASING - Johnson Well Casing Company

Figure #1

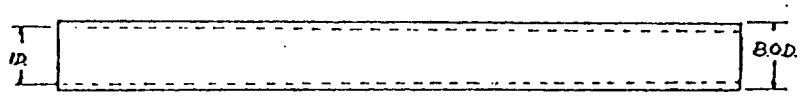

Pipe Size, Inches	I.D." ±.125"	B.O.D." Min.	B.O.D." Max.
12"	12.00	13.26	13.42
16"	16.00	17.48	17.70

Ovality - .250" max.

Figure #2

Ovality 0.250"-0.375" max

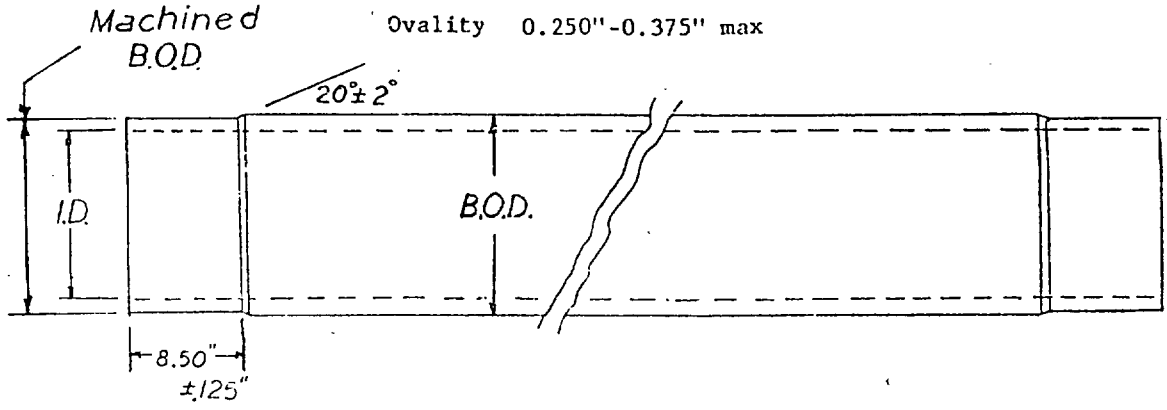

Dimensions of the Machined B.O.D. same as Figure I.

CTD015470

I.D. same as in Figure #1

PREPARED BY:	APPROVED BY:	R & D	MFG.	SALES	I.E.	OTHERS

TECHNICAL SPECIFICATIONS

CertainTeed

CertainTeed Corporation
Pipe and Plastics Group

SPECIFICATIONS CLASSIFICATION: A/C Standard Product Specification		
T.C.O. REF. NO. 3	SPECIFICATION NO: 16	PAGE NO.: 5
SUPERSEDES: March 1, 1978		DATE OF ISSUE: NOV 8 1978

DESCRIPTION:

WELL CASING - Johnson Well Casing Company

Figure #3

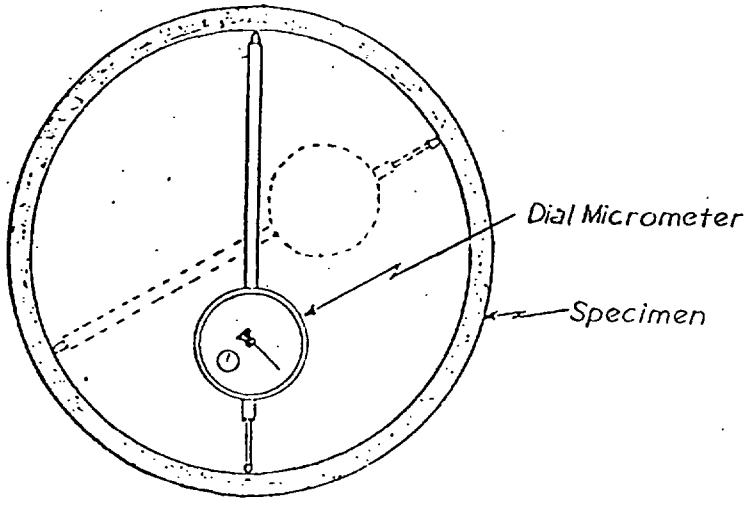

Find I.D. max. and I.D. min. using a dial micrometer described in 6.1. Measurement shall be taken one inch from the pipe ends.

Figure #4

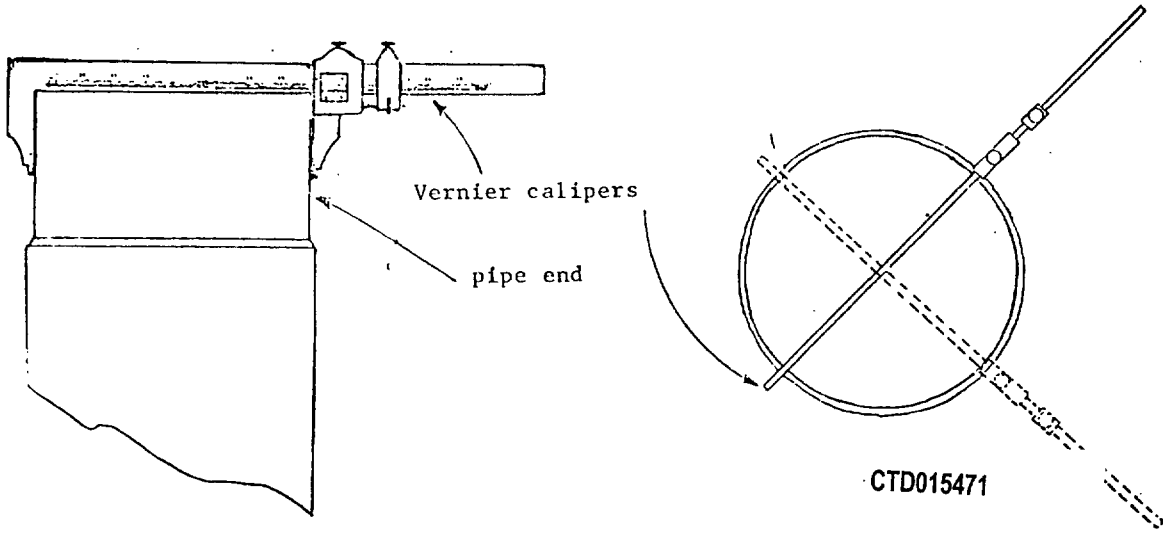

CTD015471

PREPARED BY:	APPROVED BY:	R & D	MFG.	SALES	I.E.	OTHERS
ABV						

TECHNICAL SPECIFICATIONS

CertainTeed

CertainTeed Corporation
Pipe and Plastics Group

SPECIFICATIONS CLASSIFICATION: A/C Standard Product Specification

T.C.O. REF. NO.	SPECIFICATION NO:	PAGE NO.:
3	16	6

SUPERSEDES: March 1, 1978

DATE OF ISSUE: NOV 3 1978

DESCRIPTION:

WELL CASING - Johnson Well Casing Company

Figure #5

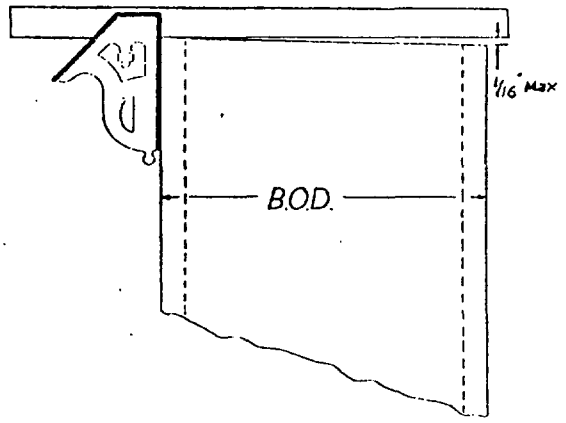

(a)

(a) Squareness shall be 1/16" or less when measured across entire pipe as shown.

(b)(c) Squareness across the pipe wall shall be 1/32" or less when measured as shown.

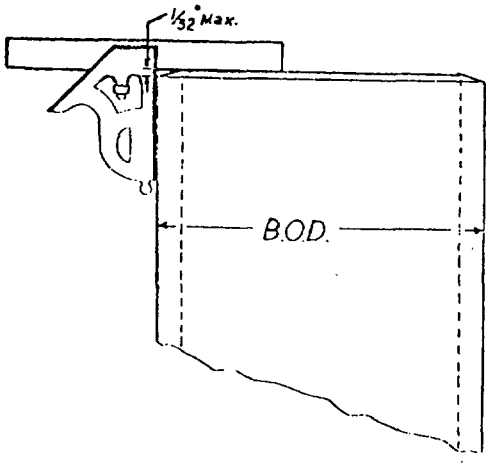

(b)

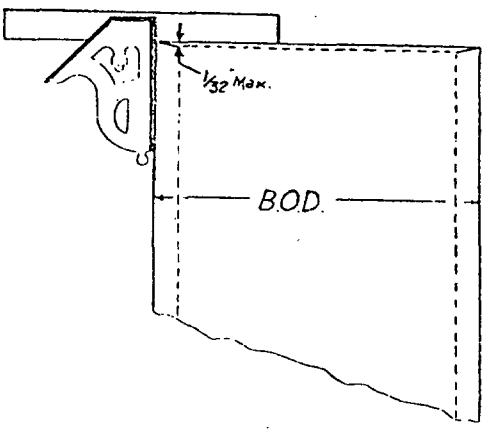

(c)

CTD015472

PREPARED BY:	APPROVED BY:	R & D	MFG.	SALES	I.E.	OTHERS
LBH	MWS					