A

VCM TANK FARM COMPRESSOR UPGRADE

ABERDEEN PLANT

CLASS "A" DESIGN

JANUARY 09, 1992

WORK BY: H. T. Harris
Coop Process Engineer

WORK BY: Berlin Genetti
W. B. Genetti
Coop Process Engineer

REVIEWED BY: Ray H. Sneed
R. H. Sneed
Lead Process Engineer

A

VCM TANK FARM COMPRESSOR UPGRADE
ABERDEEN PLANT
JANUARY 09, 1992

TABLE OF CONTENTS

I.	PROBLEM DEFINITION
II.	PROJECT DESCRIPTION
III.	JUSTIFICATION
VI.	PROCESS DESCRIPTION
V.	ECONOMIC EVALUATION
VI.	SAFETY AND ENVIRONMENTAL EVALUATION
VII.	EQUIPMENT AND INSTRUMENTATION LIST
VIII.	SPECIFICATION SHEETS
IX.	PIPING SCHEDULE
X.	WORK LIST
XI.	DCS TIE-IN LIST
XII.	DCS INTERLOCKS LIST
XII.	DIAGRAMS

A

VCM TANK FARM COMPRESSOR UPGRADE
ABERDEEN PLANT
JANUARY 09, 1992

I. PROBLEM DEFINITION

On several occasions the rail car unloading system has shut down. There has been a catastrophic failure of the compressors causing damage to compressor housing and internals. Most failures have caused some emission of VCM. These failures have been caused by liquid entering the compression chamber or the compressor running above its design conditions.

A

VCM TANK FARM COMPRESSOR UPGRADE
ABERDEEN PLANT
JANUARY 09, 1992

II. PROJECT DESCRIPTION

This project will install instrumentation for safer operation of the Corken compressors in the VCM tank farm. The instrumentation installed will shut down the rail car unloading system should one of the switches be triggered.

The tank farm instrumentation will include the following:

1. INDIVIDUAL COMPRESSOR SHUT DOWN

   A. Low oil pressure switch on each compressor crank case.

   B. Low pressure switch on the compressor inlet.

   C. High temperature switch on each compressor discharge line.

   D. High liquid level switch on each compressor knock-out pot discharge line.

2. ALL COMPRESSOR SHUTDOWN

   A. High pressure switch on each compressor discharge line.

   B. High high level switch on VCM storage sphere knock out pot.

   C. Interlocks with existing instrumentation:
      1. Sphere isolation valve.
      2. Sphere deluge system.
      3. Rail car deluge.

Each of the above switches will provide an input to the DCS. The DCS will also be responsible for providing the output for energizing the compressors. Software can be easily implemented for interlocking the above compressor shut downs.

VCM TANK FARM COMPRESSOR UPGRADE
ABERDEEN PLANT
JANUARY 09, 1992

III. JUSTIFICATION

Installing supplementary instrumentation and alarms in the tank farm will decrease the hazards associated with the unloading of liquid VCM rail cars. The end result of every malfunction of the unloading system is a VCM leak. It is necessary to know where the source of the malfunction came from and that the system will be shut down once a malfunction has occurred.

This safety and health project will reduce the possibility of a compressor shutting down and the system continuing to run and cause a VCM leak.

VCM TANK FARM COMPRESSOR UPGRADE
ABERDEEN PLANT
JANUARY 09, 1992

VI. PROCESS DESCRIPTION

The existing high temperature switches, TSH-(105-110), will be tied into the DCS (see P&I diagram). The individual compressors will be shut down at 340 degrees F.

Compressors CP-(102-105) have existing low pressure switches on their discharge line. These switches, PSL-(107-110), will be moved to the inlet line of the compressor. A low pressure switch, PSL-106, will be installed on CP-101. The switches will be tied into the DCS. The DCS will shut down the individual compressor at 8 pisg.

The existing high pressure switch, PSH-106, on the emissions recovery system (ERS) knock-out pot, will be tied into the DCS. All compressors will shut down when the ERS pressure reaches 75 psig.

High temperature switches, TSH-(101 and 105), will be installed on the discharge of compressors, CP-101 and CP-105. The other compressors have existing switches, TSH-(102-104). These switches will be tied into the DCS. The individual compressors will be shut down at 230 degrees F.

High liquid level switches, LSH-(101-105), will be installed on the discharge line of the compressor knock-out pots. These switches will be tied into the DCS. The DCS will shut down the individual compressor when a high level of liquid VCM is detected (see DCS interlocks list).

Low pressure switches, PSL-(101-105), will be installed on each compressor crank case. These switches will be tied into the DCS. The individual compressors will be shut down at 12 psig.

VCM TANK FARM COMPRESSOR UPGRADE
ABERDEEN PLANT
JANUARY 09, 1992

VI. PROCESS DESCRIPTION (Continued...)

High pressure switches, PSH-(101-105), will be installed on the discharge line of each compressor. These switches will be tied into the DCS. All compressors will be shut down if any of the discharge lines reach 125 psig. A HAZOP of the VCM tank farm determined the flex hoses the weak link in the unloading system. All compressors will be shut down before the flex hoses reach a hazardous pressure.

A high-high level switch, LSHH-101, will be installed on an existing nozzle on the sphere knock-out pot. This switch will be tied into the DCS. All compressors will be shut down if high liquid VCM level is detected. This will keep the sphere knock-out pot from overflowing into the compressor inlet.

All switches, both new and existing will be tied into DCS (see DCS tie-in list). A DCS controller card and three additional TRIO blocks will be purchased, as part of this project, to handle the 32 additional discreet inputs and 5 additional decreet outputs that must be tied into the DCS. A VCM unloading graphic will be created. The switches will generate alarms on the DCS when engaged. These alarms will be included in the ladder logic for energizing the compressors. This will provide compressor shut downs when the given alarm condition occurs (see DCS interlocks list).

Interlocks with other equipment will be created to shut down the compressors in the following instances:

1. The sphere isolation valve is closed (DCS NUMBER: 00X120).

2. The sphere deluge system is activated (DCS NUMBER: 00HA001).

3. The rail car deluge system is activated (DCS NUMBER: 00HA105).

VI. PROCESS DESCRIPTION (Continued...)

The vinyl operator will use two-way radios to communicate with the yard operator. Although the compressors will be energized from the DCS, the yard operator will be required to start the compressors from a local hand switch. The compressors' hand switches will be located at the shed.

A drain line, 1-HX-101-N-A2-1, will be run from the vapor header of the sphere to the ERS knock-out pot. This line will be used to drain any liquid out of the vapor line before the compressors are started. This line will be tied into the vapor header at the existing bleeder valve west of compressor CP-103. A check valve will be installed in this line.

All lines down stream of the new drain line, 1-HX-101-N-A2-1, including the compressor knock-out pots and inlets to the compressors, will be heat traced and insulated.

This design will keep the compressors operating within there designed parameters. The compressors will be shut down before serious problems occur.

VCM TANK FARM COMPRESSOR UPGRADE
ABERDEEN PLANT
JANUARY 09, 1992

V. ECONOMIC EVALUATION

This project has a projected cost of $50M - $100M.

VI. SAFETY AND ENVIRONMENTAL EVALUATION

This project will provide a safer operation of the compressors during the rail car unloading procedure. The ultimate result of the project will be a reduced chance for a VCM emission. This provides an added security to plant workers and the community.

EQUIPMENT AND INSTRUMENTATION LIST

LEVEL SWITCHES

ITEM	NEW EXISTING RELOCATED	SPEC. SHEET NUMBER	DESCRIPTION
LSH-101	NEW	1	ULTRA SONIC LEVEL SWITCHES. INDICATE HIGH LIQUID LEVEL IN DISCHARGE LINE OF THE COMPRESSOR KNOCK-OUT POTS.
LSH-102	NEW	1	
LSH-103	NEW	1	
LSH-104	NEW	1	
LSH-105	NEW		
LSHH-101	NEW	1	CAPACITANCE PROBE LEVEL SWITCH. LOCATED IN SPHERE KNOCK-OUT POT.

TEMPERATURE SWITCHES

TSH-101	NEW	3	HIGH TEMPERATURE SWITCH FOR COMPRESSOR DISCHARGE LINES. SET POINT IS 230 DEGREES F.
TSH-102	EXISTING		
TSH-103	EXISTING		
TSH-104	EXISTING		
TSH-105	NEW	3	
TSH-106	EXISTING		HIGH TEMPERATURE FOR COMPRESSOR HEADS. SET POINT IS 340 DEGREES F.
TSH-107	EXISTING		
TSH-108	EXISTING		
TSH-109	EXISTING		
TSH-110	EXISTING		

PRESSURE SWITCHES

PSL-101	NEW	2	LOW PRESSURE SWITCH FOR COMPRESSOR CRANK CASE. SET POINT IS 12 PSIG.
PSL-102	NEW	2	
PSL-103	NEW	2	
PSL-104	NEW	2	
PSL-105	NEW	2	
PSL-106	NEW	2	LOW PRESSURE SWITCHES FOR DISCHARGE OF COMPRESSOR KNOCK-OUT POT. SET POINT IS 8 PSIG.
PSL-107	RELOCATED	2	
PSL-108	RELOCATED	2	
PSL-109	RELOCATED	2	
PSL-110	RELOCATED	2	
PSH-101	NEW	2	HIGH PRESSURE SWITCHES FOR COMPRESSOR DISCHARGE LINES. SET POINT IS 125 PSIG.
PSH-102	NEW	2	
PSH-103	NEW	2	
PSH-104	NEW	2	
PSH-105	NEW	2	
PSH-106	EXISTING		PRESSURE SWITCH FOR THE ERS. SET POINT IS 75 PSIG.

DCS HARDWARE

A DCS CONTROLLER CARD WILL BE PURCHASED FOR THIS PROJECT.
THREE ADDITIONAL TRIO BLOCKS MUST BE PURCHASED FOR THIS PROJECT.

VISTA

VISTA CHEMICAL COMPANY
GENERAL ENGINEERING
HOUSTON, TEXAS

SPECIFICATION SHEET

LIQUID LEVEL DEVICES

A.F.E. NO. _____
DATE 4/29/91 W. O. NO. _____
MADE BY HTH INQ. NO. _____
APP'D BY _____ REQ. NO. _____
B. M. NO. _____ P. O. NO. _____

PLANT ABERDEEN PROJECT: VCM TANKFARM COMPRESSOR UPGRADE

1	ITEM NUMBER	LSHH - 101		LSH-101,102,103,104,105				
2	SERVICE	HIGH LEVEL SWITCH		HIGH LEVEL SWITCH				
3	LOCATION	DM-061		COMP. K.O. POT				
4	FUNCTION LIQ. LEVEL, SP. GR. INTERFACE LEVEL	LIQUID LEVEL		LIQUID LEVEL				
5	OPERATING CONDITIONS	2-70 psi	40-100°F	100 psi	200°F			
6	UPPER FLUID	VCM VAPOR		VCM VAPOR				
7	LOWER FLUID	VCM LIQUID		VCM LIQUID				
8	DENSITY @ T. & P. UPPER / LOWER							
9	TEMP., °F / PRESSURE, psig							
10	DIELECTRIC CONSTANT							
11								
12	SENSOR							
13	TYPE DISPLACER (INT OR EXT) FLOAT, d/p CELL, PROBE	CAPACITOR PROBE		ULTRA SONIC				
14	RANGE							
15	DIMENSIONS							
16	MATERIAL							
17	EXTENSION LENGTH							
18	BODY MATERIAL							
19	CONNECTIONS SIZE							
20	LOCATION							
21								
22	MODEL NUMBER							
23	TRANSMITTER							
24	PNEU – ELEC	ELECTRICAL		ELECTRICAL				
25	OUTPUT SIGNAL							
26	ELECTRICAL POWER SUPPLY							
27	CLASSIFICATION							
28								
29	MODEL NUMBER							
30	SWITCH							
31	TYPE: MERC OR SNAP ACTING							
32	QUANTITY / FORM (SPDT, ETC.)							
33	CONDUIT CONN SIZE / TYPE							
34	RATING VOLTS / CY or DC							
35	AMPS / WATTS							
36	LOAD TYPE (INDUCTIVE YES, NO)							
37	DIFFERENTIAL FIXED / ADJUST							
38	ADJUSTMENT INT / EXT							
39	CONTACTS OPEN CLOSE / ON LEVEL / INC DEC	CLOSE	ON LEVEL INC	CLOSE	ON LEVEL INC		ON LEVEL		ON LEVEL
40	MODEL NUMBER							
41	CONTROLLER							
42	PNEU – ELEC							
43	PROP % / RESET							
44	INPUT / OUTPUT							
45	ON LEVEL INC: OUTPUT INC DEC							
46	ELECTRICAL POWER SUPPLY							
47	CLASSIFICATION	CLASS I DIV II		CLASS I DIV II				
48								
49	MODEL NUMBER							
50	ACCESSORIES							
51	FILTER REGULATOR							
52								
53	MANUFACTURER	ROBERT SHAW		SENSALL				

NOTES

LSHH-101 WILL SHUT DOWN ALL THE COMPRESSORS AND WILL HAVE AN ALARM ON AP-101

LSH-101 WILL SHUT DOWN THE COMPRESSOR IT IS SERVING AND WILL HAVE AN ALARM ON AP-101

MAKE SURE INST. ON A90'S WORK ON 610'S

SHEET 1 OF 3 REV

4-434-S

1-85

VAP.0001106437

VISTA

Vista Chemical Company
GENERAL ENGINEERING
HOUSTON, TEXAS

Pressure Instruments

SPECIFICATION DATA SHEET
PROJECT NO. ____
A.F.E. NO. ____
P.O. NO. ____
MADE BY H.T. HARRIS
DATE 4/29/91 APP'D BY ____

PLANT ABERDEEN PROJECT VCM TANK FARM COMPRESSOR UPGRADE

GENERAL	1	TAG NO.	PSH-101,102,103,104,105		PSL-101,102,103,104,105		PSL-106,107,108,109,110	
	2	SERVICE	HIGH PRESSURE SWITCH		LOW PRESSURE SWITCH		LOW PRESSURE SWITCH	
	3	LOCATION	CP-101,102,103,104,105		CP-101,102,103,104,105		CP-101,102,103,104,105	
	4	INSTRUMENT TYPE	SWITCH		SWITCH		SWITCH	
	5	LOCATION	COMPRESSOR OUTLET		COMPRESSOR CRANK CASE		COMPRESSOR INLET	
	6		VAPOR PRESSURE		OIL PRESSURE		VAPOR PRESSURE	
ELEMENT	7	TYPE						
	8	LOCATION	CP-101,102,103,104,105		CP-101,102,103,104,105		CP-101,102,103,104,105	
	9							
	10	TEMPERATURE, °F NORMAL / DESIGN		350		350		350
	11	PRESSURE, PSIG NORMAL / DESIGN	65-95	280	65-95	280	65-95	280
	12	MATERIAL	STAINLESS STEEL		STAINLESS STEEL		STAINLESS STEEL	
	13	TRANSMITTER: PNEU OR ELECT.	ELECTRICAL		ELECTRICAL		ELECTRICAL	
	14	RANGE, PSIG	50-150		0-50		0-150	
	15	ALARM SET POINT / INC. OR DEC.	125	INC.	10	DEC.	8	DEC
	16							
VALVE	17	MFR / MODEL (1)						
	18	LOCATION						
	19	SIZE: BODY / PORT						
	20	MATERIAL: BODY / TRIM						
	21	TRIM FORM						
	22	C_V (C_g) FULL OPEN / C_1						
	23	END CONN AND ANSI CLASS						
	24	LEAKAGE CLASS REQ'D						
	25	FAILURE POSITION						
	26							
VALVE SERVICE CONDITIONS	27	FLUID (NOTE: LIQ/VAP)	VAPOR		VAPOR		VAPOR	
	28	TEMPERATURE, °F NORMAL / DESIGN						
	29	PRESSURE, PSIG NORMAL / DESIGN						
	30	ΔP, PSI / MIN. RATE / NORM. RATE / MAX. RATE						
	31	MAX. SHUTOFF ΔP, PSI						
	32	RATE, MIN. / C_V (C_g)						
	33	RATE, NORMAL / C_V (C_g)						
	34	RATE, MAX. / C_V (C_g)						
	35	ΔP ALLOW. PSI / K_M						
	36	°API (MW)						
	37	SP. GR. (LB/CU FT) AT T&P						
	38	VAPOR PRES. AT TEMP. / CRIT. PRES.						
	39	OPER. VISC., cp / VOL. % VAPOR						
	40	SUPERHEAT, °F / WT % SOLID						
	41	WT % VAPOR: IN / OUT						
	42	MAX. PRED. SND LEVEL, dBA / AT RATE						
	43							

NOTES

44 (1) OR CONOCO APPROVED EQUAL
45 PSL-107 -> 110 IS AN EXISTING SWITCH ON THE COMPRESSOR
46 DISCHARGE LINE. THIS WILL BE MOVED TO THE OUTLET OF THE
47 COMPRESSOR KNOCK OUT POT.
48
49 MAKE SURE INSTRUMENTS PUT ON THE 490'S CAN BE USED ON A 690.
50
51

(X) INDICATES MANUFACTURER TO GIVE INFORMATION IN HIS QUOTATION.

SPEC NO. ____ REV. ____
SHEET 2 OF 3

VAB.0001106438

4-450 S

11-85

A

VISTA

VISTA CHEMICAL COMPANY
GENERAL ENGINEERING
HOUSTON, TEXAS

SPECIFICATION SHEET
Temperature Instruments

A.F.E. NO. ____
DATE 4-29-91 W. O. NO. ____
MADE BY HTH INQ. NO. ____
APP'D BY ____ REQ. NO. ____
B. M. NO. ____ P. O. NO. ____

PLANT ABERDEEN PROJECT VCM TANK FARM COMPRESSOR UPGRADE

GENERAL	1	TAG NO.	TSH-101, 105					
	2	SERVICE	HIGH TEMP. SWITCH					
	3	LOCATION	CP-101+105.					
	4	INSTRUMENT TYPE						
	5	LOCATION	COMPRESSOR OUTLET					
	6							
ELEMENT	7	TYPE						
	8							
	9	LOCATION	CP-101+105					
	10	TEMPERATURE, °F	-350 MAX					
	11	PRESSURE, PSIG	280 MAX					
	12	MATERIAL	STAINLESS STEEL.					
	13	TRANSMITTER: PNEU OR ELECT	ELECTRICAL					
	14	RANGE, °F	100 - 400					
	15	ALARM SET POINT	230°F INC.					
VALVE	16	TYPE	X					
	17		X					
	18	LOCATION	X					
	19	MATERIAL: BODY / TRIM	X	X				
	20	SIZE: BODY / PORT	X	X				
	21	NUMBER OF PORTS	X					
	22	PLUG FORM	X					
	23	ΔP: MIN. / NORM. / MAX.	X	X	X			
	24	CALC. CV — NORMAL FLOW / MAX. FLOW	X	X				
	25	VALVE CV — FULL OPEN	X					
	26	FAILURE POSITION	X					
	27	MAX. SHUT OFF ΔP	X					
	28	DESIGN PRESSURE	X					
	29		X					
VALVE SERVICE CONDITIONS	30	FLUID (NOTE LIQ/VAP)						
	31	TEMP, °F: NORM. / MAX.						
	32	PRESSURE, PSIG						
	33	°API (MW)						
	34	SP GR AT STD. COND.						
	35	SP GR AT T&P						
	36	VAPOR PRESS. AT T, PSI						
	37	WEIGHT % VAPOR IN-OUT						
	38	VISCOSITY AT T&P						
	39	% LIQ., IN / OUT						
	40	RATE: NORMAL						
	41	RATE: MAX. / MIN.						
	42							
NOTES	43	MAKE SURE INSTRUMENTS PUT ON A 490 ARE COMPATABLE W/ 690'S						
	44							
	45							
	46							
	47							
	48							
	49							
	50							
	51							

(X) INDICATES MANUFACTURER TO GIVE INFORMATION IN HIS QUOTATION.

SPEC NO ____ REV. ____
SHEET 3 OF 3

VAB.0001106439

4-530-S

VCM TANK FARM COMPRESSOR UPGRADE
ABERDEEN PLANT
JANUARY 09, 1992

X. WORK LIST

NO VCM UNLOADING SHUT DOWN REQUIRED:

1. Install the controller card and TRIO blocks on the DCS.

2. Create a DCS graphic for VCM unloading.
   A. Create Alarms for all switches (see DCS tie-in list).
   B. Create ladder logic for energizing the compressors (see DCS interlocks list).

3. Install wiring between the DCS (vinyl control room) and the compressors and switches.

VCM UNLOADING SHUT DOWN REQUIRED:

1. Install LSH-(101-105) on compressor knock-out pot.
   A. Connect to the DCS (00LAXX1-5).

2. Install PSL-(106-110) to compressor knock-out pot discharge line.
   A. Connect to the DCS (00PAX17-21).

3. Connect TSH-(106-110) to the DCS (00TAXX7-11).

4. Install PSL-(101-105) to compressor crankcase.
   A. Connect to the DCS (00PAX22-26).

5. Install TSH-101 and TSH-105 to CP-101 and CP-105 discharge lines.
   A. Connect TSH-(101-105) to the DCS (00TAX12-16).

6. Install PSH-(101-105) to the compressor discharge line.
   A. Connect to the DCS (00PAX27-31).

7. Connect PSH-106 to the DCS (00PAX32).

8. Install LSHH-101 to the sphere knock-out pot (in existing nozzle).
   A. Connect to the DCS (00LAXX6).

VCM TANK FARM COMPRESSOR UPGRADE
ABERDEEN PLANT
JANUARY 09, 1992

X. WORK LIST (Continued...)

9. Install 1-HX-101-N-A2-1 from the bleeder valve west of CP-103 to the ERS knock-out pot.

14. Heat trace and insulate all lines from the drain line 1-HX-101-N-A2-1 to the compressor inlet.

DCS TIE – IN LIST

INPUT

DSC NUMBER	SOURCE
00LAXX1	LSH-101
00LAXX2	LSH-102
00LAXX3	LSH-103
00LAXX4	LSH-104
00LAXX5	LSH-105
00LAXX6	LSHH-101
00TAXX7	TSH-106
00TAXX8	TSH-107
00TAXX9	TSH-108
00TAX10	TSH-109
00TAX11	TSH-110
00TAX12	TSH-101
00TAX13	TSH-102
00TAX14	TSH-103
00TAX15	TSH-104
00TAX16	TSH-105
00PAX17	PSL-106
00PAX18	PSL-107
00PAX19	PSL-108
00PAX20	PSL-109
00PAX21	PSL-110
00PAX22	PSL-101
00PAX23	PSL-102
00PAX24	PSL-103
00PAX25	PSL-104
00PAX26	PSL-105
00PAX27	PSH-101
00PAX28	PSH-102
00PAX29	PSH-103
00PAX30	PSH-104
00PAX31	PSH-105
00PAX32	PSH-106

OUTPUT

DSC NUMBER	TO
00HMX33	CP-101
00HMX34	CP-102
00HMX35	CP-103
00HMX36	CP-104
00HMX37	CP-105

A

DCS INTERLOCKS LIST

ALL COMPRESSOR SHUT DOWN INTERLOCK

ALARM	DESCRIPTION	SOURCE
00PAX27	HIGH DISCHARGE PRESSURE ON CP-101	PSH-101
00PAX28	HIGH DISCHARGE PRESSURE ON CP-102	PSH-102
00PAX29	HIGH DISCHARGE PRESSURE ON CP-103	PSH-103
00PAX30	HIGH DISCHARGE PRESSURE ON CP-104	PSH-104
00PAX31	HIGH DISCHARGE PRESSURE ON CP-105	PSH-105
00LAXX6	HIGH LEVEL IN THE VCM SPHERE KNOCK-OUT POT	LSHH-101
00PAX32	HIGH PRESSURE IN THE ERS KNOCK-OUT POT	PSH-106
OOX120	SPHERE ISOLATION VALVE CLOSED	
00HA001	SPHERE DELUGE SYSTEM ACTIVATED	
00HA105	RAIL CAR DELUGE SYSTEM ACTIVATED	

CP-101 SHUT DOWN

ALARM	DESCRIPTION	SOURCE
00LAXX1	HIGH COMPRESSOR KNOCK-OUT LIQUID LEVEL	LSH-101
00PAX17	LOW COMPRESSOR KNOCK-OUT POT DISCHARGE PRESSURE	PSL-106
00TAXX7	HIGH COMPRESSOR HEAD TEMPERATURE	TSH-106
00TAX12	HIGH COMPRESSOR DISCHARGE TEMPERATURE	TSH-101
00PAX22	LOW COMPRESSOR OIL PRESSURE	PSL-101
ALL COMPRESSOR SHUT DOWN ACTIVATED		

WHEN ALL ALARMS ARE OFF, DCS WILL ENERGIZE 00HMX33.
AN OPERATOR WILL BE REQUIRED TO START CP-101 THROUGH
A LOCAL HAND SWITCH.

CP-102 SHUT DOWN

ALARM	DESCRIPTION	SOURCE
00LAXX2	HIGH COMPRESSOR KNOCK-OUT LIQUID LEVEL	LSH-102
00PAX18	LOW COMPRESSOR KNOCK-OUT POT DISCHARGE PRESSURE	PSL-107
00TAXX8	HIGH COMPRESSOR HEAD TEMPERATURE	TSH-107
00TAX13	HIGH COMPRESSOR DISCHARGE TEMPERATURE	TSH-102
00PAX23	LOW COMPRESSOR OIL PRESSURE	PSL-102
ALL COMPRESSOR SHUT DOWN ACTIVATED		

WHEN ALL ALARMS ARE OFF, DCS WILL ENERGIZE 00HMX34.
AN OPERATOR WILL BE REQUIRED TO START CP-102 THROUGH
A LOCAL HAND SWITCH.

A

DCS INTERLOCKS LIST

(CONTINUED...)

CP-103 SHUT DOWN

ALARM	DESCRIPTION	SOURCE
00LAXX3	HIGH COMPRESSOR KNOCK-OUT LIQUID LEVEL	LSH-103
00PAX19	LOW COMPRESSOR KNOCK-OUT POT DISCHARGE PRESSURE	PSL-108
00TAXX9	HIGH COMPRESSOR HEAD TEMPERATURE	TSH-108
00TAX14	HIGH COMPRESSOR DISCHARGE TEMPERATURE	TSH-103
00PAX24	LOW COMPRESSOR OIL PRESSURE	PSL-103
ALL COMPRESSOR SHUT DOWN ACTIVATED		

WHEN ALL ALARMS ARE OFF, DCS WILL ENERGIZE 00HMX35.
AN OPERATOR WILL BE REQUIRED TO START CP-103 THROUGH
A LOCAL HAND SWITCH.

CP-104 SHUT DOWN

ALARM	DESCRIPTION	SOURCE
00LAXX4	HIGH COMPRESSOR KNOCK-OUT LIQUID LEVEL	LSH-104
00PAX20	LOW COMPRESSOR KNOCK-OUT POT DISCHARGE PRESSURE	PSL-109
00TAX10	HIGH COMPRESSOR HEAD TEMPERATURE	TSH-109
00TAX15	HIGH COMPRESSOR DISCHARGE TEMPERATURE	TSH-104
00PAX25	LOW COMPRESSOR OIL PRESSURE	PSL-104
ALL COMPRESSOR SHUT DOWN ACTIVATED		

WHEN ALL ALARMS ARE OFF, DCS WILL ENERGIZE 00HMX36.
AN OPERATOR WILL BE REQUIRED TO START CP-104 THROUGH
A LOCAL HAND SWITCH.

CP-105 SHUT DOWN

ALARM	DESCRIPTION	SOURCE
00LAXX5	HIGH COMPRESSOR KNOCK-OUT LIQUID LEVEL	LSH-105
00PAX21	LOW COMPRESSOR KNOCK-OUT POT DISCHARGE PRESSURE	PSL-110
00TAX11	HIGH COMPRESSOR HEAD TEMPERATURE	TSH-110
00TAX16	HIGH COMPRESSOR DISCHARGE TEMPERATURE	TSH-105
00PAX26	LOW COMPRESSOR OIL PRESSURE	PSL-105
ALL COMPRESSOR SHUT DOWN ACTIVATED		

WHEN ALL ALARMS ARE OFF, DCS WILL ENERGIZE 00HMX37.
AN OPERATOR WILL BE REQUIRED TO START CP-105 THROUGH
A LOCAL HAND SWITCH.

A

VCM TANK FARM COMPRESSOR UPGRADE
ABERDEEN PLANT
JANUARY 09, 1992

LEGEND

	NEW
	EXISTING
	4 WAY VALVE
	VALVE
	CHECK VALVE
	DCS INPUT/OUTPUT
A	ALARM
CP	COMPRESSOR
HM	OUTPUT TO MOTOR
HS	LOCAL HAND SWITCH
L	LEVEL DCS SIGNAL
LSH	HIGH LEVEL SWITCH
LSHH	HIGH-HIGH LEVEL SWITCH
PG	PRESSURE GAUGE
P	PRESSURE DCS SIGNAL
PSH	HIGH PRESSURE SWITCH
LSH	LOW PRESSURE SWITCH
T	TEMPERATURE DCS SIGNAL
TSH	HIGH TEMPERATURE SWITCH

A

VCM TANK FARM COMPRESSOR UPGRADE
ABERDEEN PLANT
JANUARY 09, 1992

NOTES

N1 PSL-(107-110) are existing pressure switches. The switches will be relocated from the compressor discharge line to the compressor knock-out pot discharge line of compressors CP-(102-105). A pressure switch, PSL-101, will be installed on the compressor knock-out pot discharge line for CP-101. 00PAX17-21 will indicate a pressure of 8 psig or below. When the alarm activated, the individual compressor will be shut down.

N2 LSH-(101-110) (00LAXX5-10) will shut down the individual compressors when liquid is detected in the discharge line from the knock-out pot.

N3 TSH-(106-110) (00TAXX7-11) are existing temperature switches located on top of the compressor head. All lines are connected to a control box with a set point of 340 degrees F. The control box will be tied into DCS. This will shut down the individual compressor.

N4 TSH-(101 and 105) (00TAX12-16) are new temperature switches. TSH-(102-104) are existing temperature switches located on the discharge line of the compressors. An individual compressor shut down will occur at 230 degrees F.

N5 PSL-(101-105) (00PAX22-26) are low pressure switches located on the compressor crankcase. An individual compressor shut down will occur at 12 psig.

N6 PSH-(101-105) (00PAX27-31) are high pressure switches located on the discharge of the compressor. All compressors will be shut down at 125 psig.

N7 PSH-106 (00PAX32) will shut down all compressors when the Emission Recovery System knock-out pot builds up pressure to 75 psig.

N8 LSHH-101 (00PAXX6) will shut down all compressors before the sphere knock-out pot overflows.

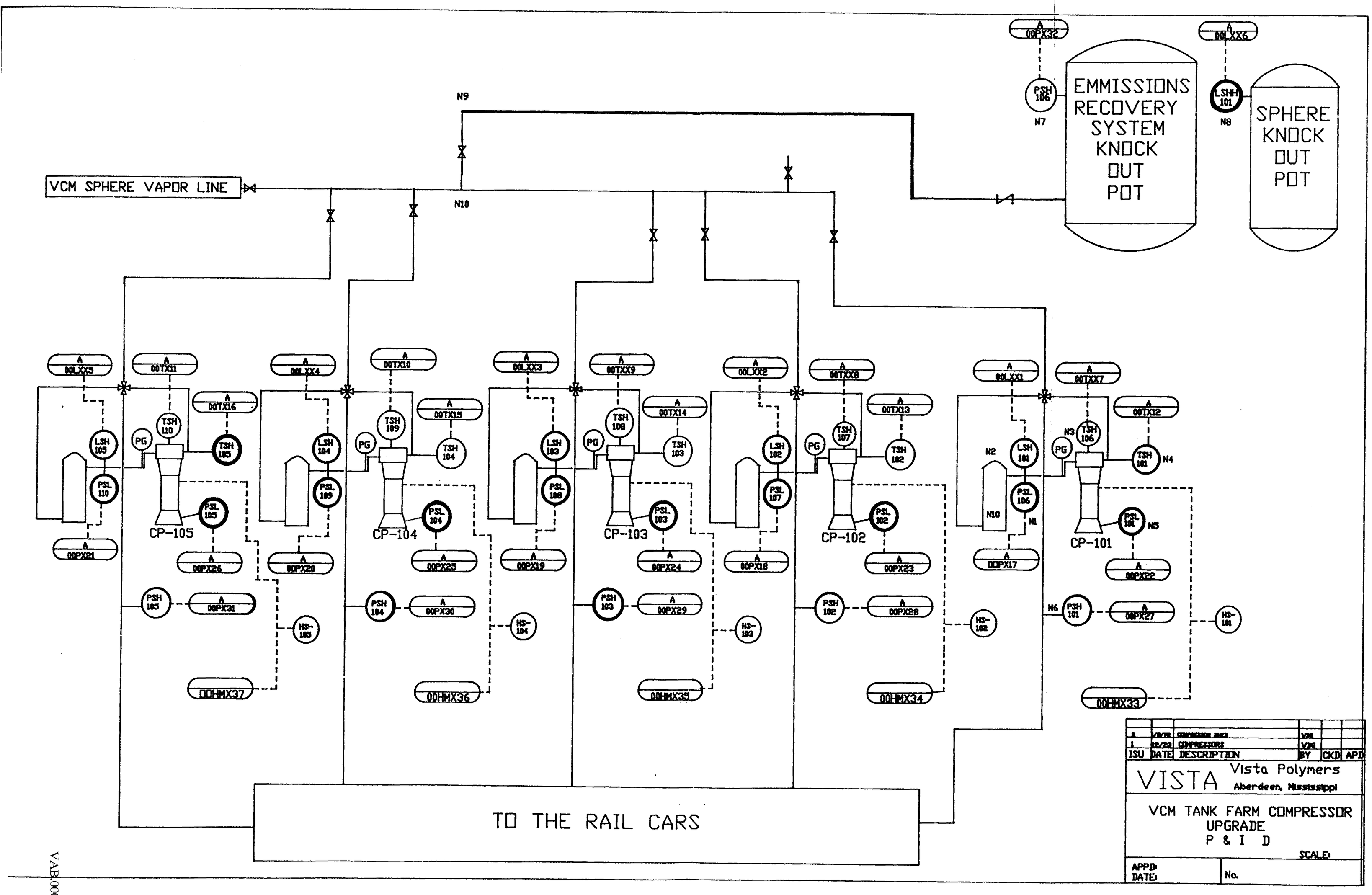

VAB.0001106447