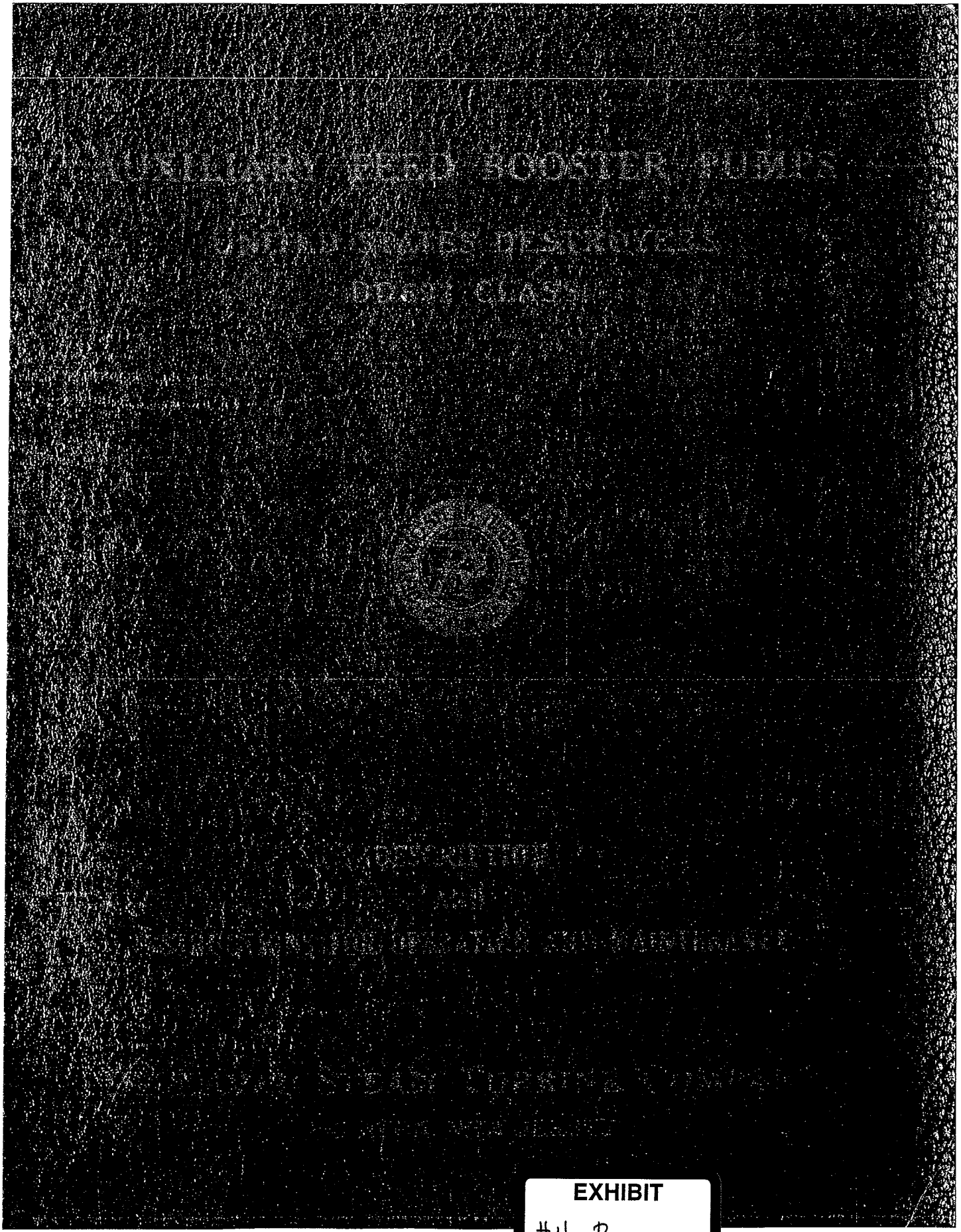

EXHIBIT
#4 Boness
04-22-09 Takaki

INSTRUCTIONS 488

AUXILIARY FEED BOOSTER PUMPS

UNITED STATES DESTROYERS
DD692 CLASS

BUILT IN 1943-'45

DE LAVAL STEAM TURBINE COMPANY
TRENTON, NEW JERSEY

September, 1944

BPI-07.08-Hawaii 003689

Pumps Furnished by

DE LAVAL STEAM TURBINE COMPANY, Trenton, N. J.

BUFFALO PUMPS, INC., Buffalo, N. Y.

The pumps furnished by Buffalo Pumps, Inc. conform in all respects to the design illustrated herein, and it should be understood that this instruction manual covers the equipment of both pump manufacturers.

BPI-07.08-Hawaii 003690

ILLUSTRATIONS

Fig.	1	Shop Photograph of Unit	Page 6
"	2	Outline of Unit	" 8
"	3	Test Performance Curves - De Laval Units.	" 9
"	4	Test Performance Curves - Buffalo Units	" 10
"	5	General Assembly of Pump.	" 12
"	6	Coupling.	" 14
"	7	Pump Bearing and Impeller Puller.	" 16
"	8	General Assembly of Motor	" 18
"	9	Typical Motor Characteristic Curves	" 21
"	10	Motor Type Test Report.	" 22
"	11	Outline and General Assembly of Motor Controller.	" 24
"	12	Motor Controller Wiring Diagram	" 26
"	13	Controller Certification Data	" 27

BPI-07.08-Hawaii 003691

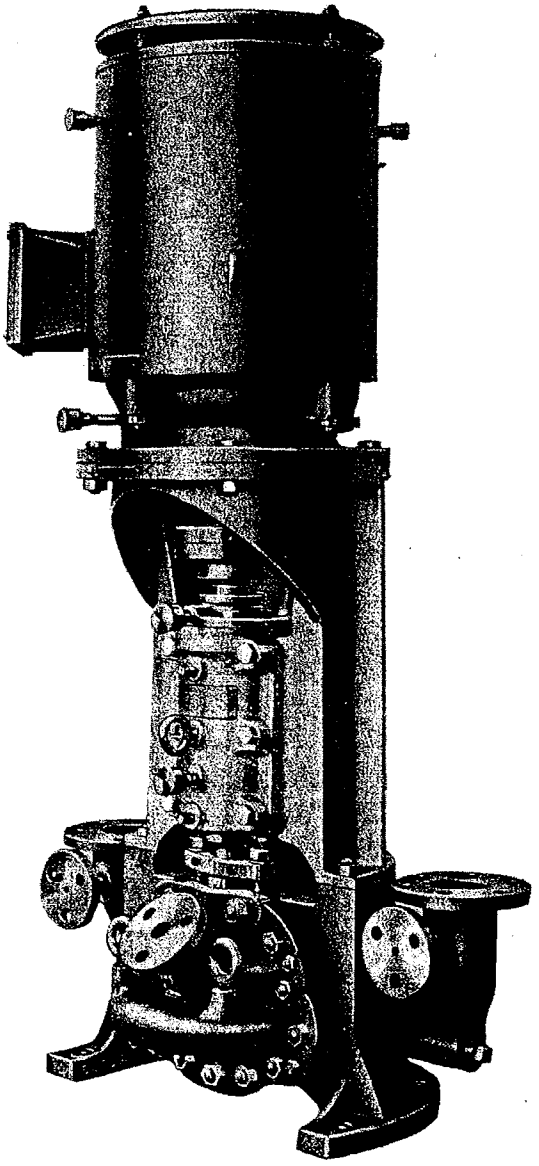

Fig. 1. Shop Photograph of Unit

BPI-07.08-Hawaii 003692

GENERAL

Composition and General Design

Two units were furnished for each ship. Each consists essentially of a size 2 1/2"/1 1/2", vertical, single stage, single suction, centrifugal pump and a vertical, squirrel cage induction motor with a magnetic, across-the-line type controller. The motor is mounted on the upper end of the pump frame, and the pump and motor shafts are connected by an all-metal flexible coupling. Figs. 1 and 2 show the general assembly.

Ratings and Operating Data

	Condition A (Rated)	*Condition B*
Delivery, gpm	25	75
Suction Pressure, psig.	17.9	17.9
Minimum Submergence, ft	7	7
Maximum Submergence, ft	12	12
Discharge Pressure, psig.	57.9	32.9
Net Pressure, psi	40	15
Water Temperature, F.	250	250
Speed, rpm.	3500	3500
Brake Horsepower.	1.94	2.36
Voltage	440	440
Cycles.	60	60
Phases.	3	3

Guarantee and Acceptance Tests

The power consumption of each unit is guaranteed not to exceed 1.8 kw when the unit is operated under the rated conditions. Acceptance test performances are shown by the characteristic curves in Figs. 3 and 4.

Drawings Supplied

Subject	*Factory No.*		*BuShips No.*
Outline, Assembly, and List of Spare Parts and Tools	DeL.	G-10188	DD692-S4700-1
Test Performance Data	"	G-10193	DD692-S4700-245414
Pump Casing Details	"	G-10189	DD692-S4700-2
Shaft, Packing Box, and Miscellaneous Details	"	G-10190	DD692-S4700-3
Impeller, Coupling, and Miscellaneous Details	"	G-10191	DD692-S4700-4
Motor Bracket Details and Tools	"	G-10192	DD692-S4700-5
Motor Plan.	E.D.	D-38207	DD692-S4700-300
Controller Plan	C.H.	922-1-1M1	94104-S6307-1657
Controller Certification Data (DD692-791, 805-808)	"	12, Sheets 1, 2, & 4	DD692-S4602-283369
Controller Certification Data (DD809-898) List of Spare Parts and Tools	"	922-14, Sheets 1 & 2	DD829-S4692-280395

BPI-07.08-Hawaii 003693

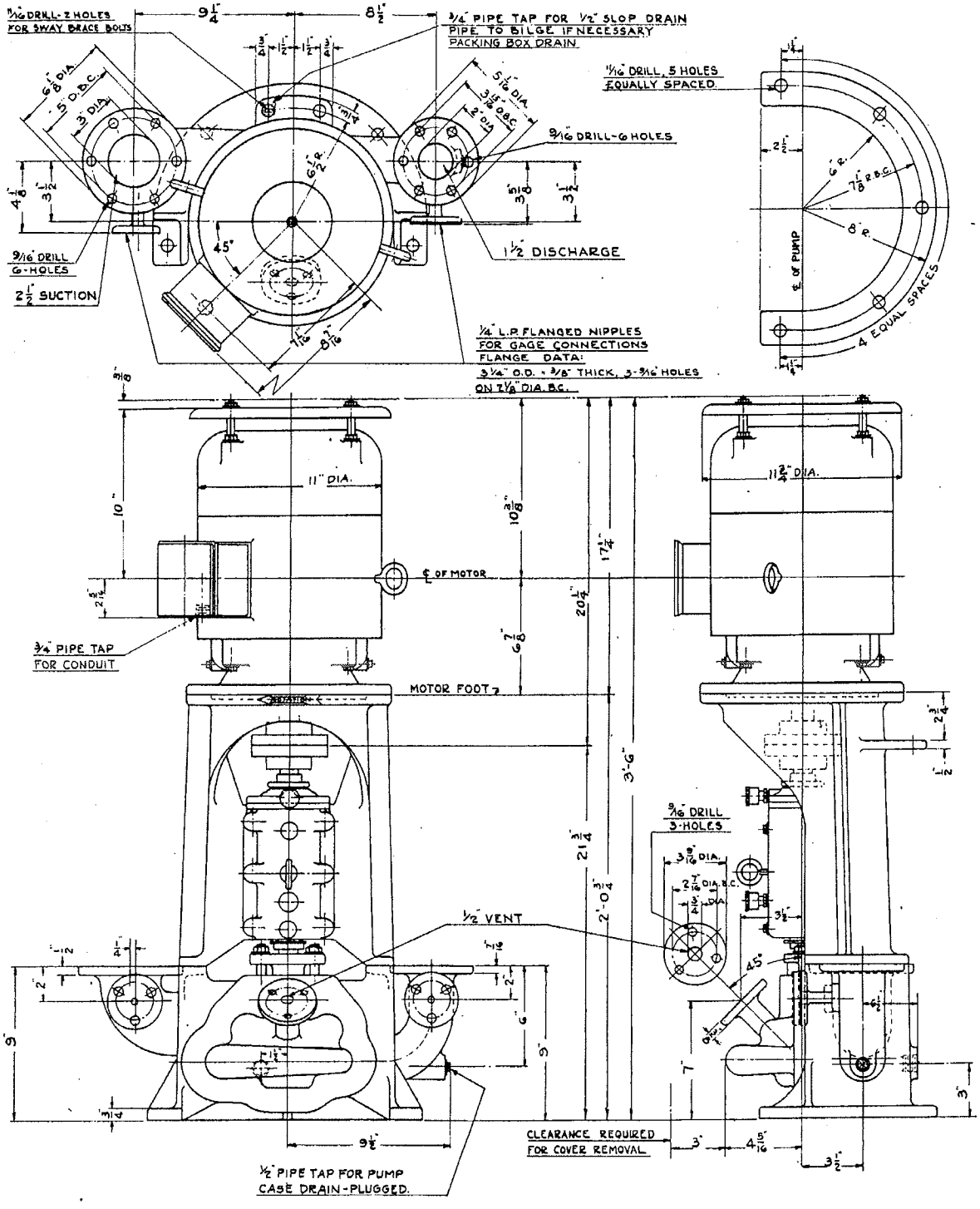

Fig. 2. Outline of Unit

BPI-07.08-Hawaii 003694

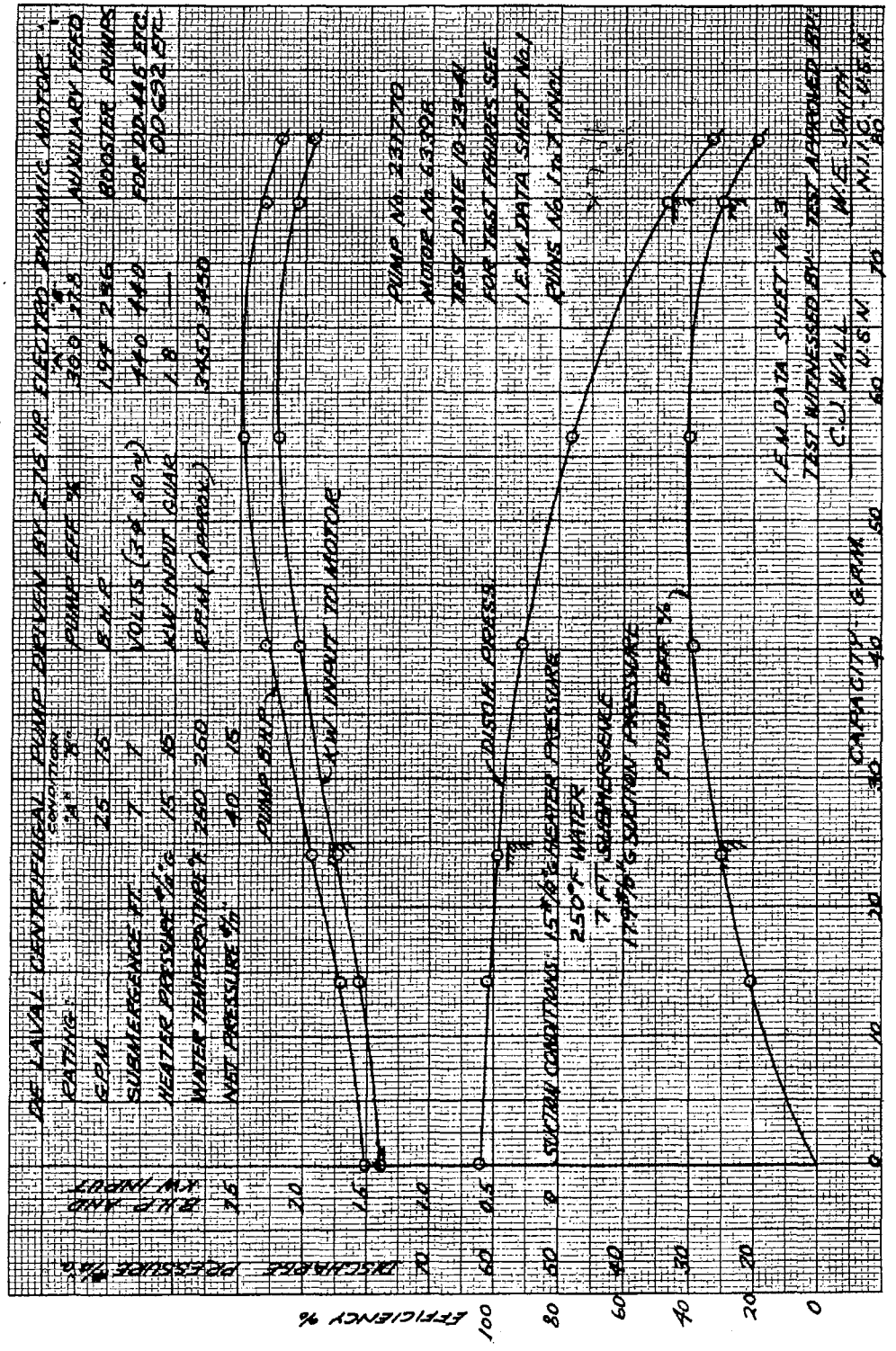

Fig. 3. Test Performance Curves - De Laval Units

BPI-07.08-Hawaii 003695

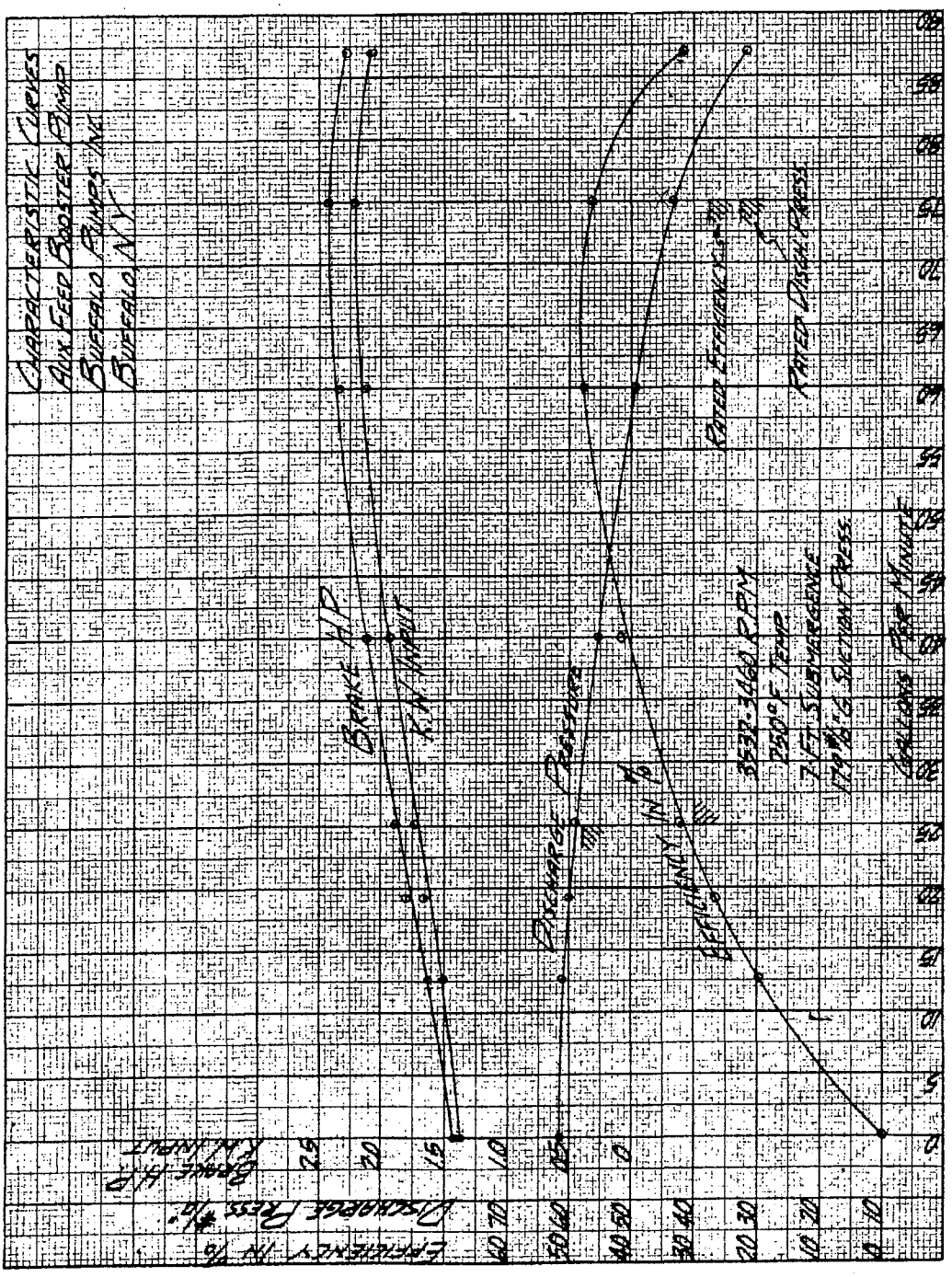

Fig. 4. Test Performance Curves - Buffalo Units

BPI-07.08-Hawaii 003696

Principal Weights

Element	*Weight*
Unit Complete	451 lbs.
Pump	225 "
Pump Casing	112 "
Pump Rotor	18 "
Motor Mounting Bracket	58 "
Motor	226 "
Motor Rotor	23 "
Motor Controller	9 "

PUMPS

General Description

The pumps are of overhung impeller construction with casings, bearing supports, and rotating elements specially designed to minimize deflection. Fig. 5 shows the pump assembly.

The pump casing is split vertically along the center line, the two sections thus formed being designated cover and case. Both the suction and discharge nozzles are located in the case section which makes it possible to remove the rotating element without the necessity for disturbing the main pipe connections.

The rotor is carried in two ball bearings which are housed in the bracket which forms the mounting for the motor.

Impeller Mounting

The impeller is bored for a light shrink fit on the shaft. It is keyed to the shaft and held against the shaft protecting sleeve by a lock nut which in turn is secured by a set screw.

A spanner wrench for the impeller lock nut was included among the special tools supplied. The threading of the nut is opposite to the direction in which the impeller normally rotates.

Internal Seal

A labyrinth type seal ring is used to prevent excessive leakage from discharge to suction passages around the impeller inlet. The seal ring is secured in the casing by a tongue and groove construction as illustrated in Fig. 5.

The seal ring clearance given in Fig. 5 is the normal or design clearance. This clearance will increase as the ring wears in service with consequent loss of pump efficiency, and the best practice is to renew the ring when the wear progresses to the point where the normal radial clearance is doubled.

Shaft Packing

Plastic metallic cotton case packing conforming to Navy Specification 33P25, Symbol 1433 is used to seal the casing at the point where the shaft

BPI-07.08-Hawaii 003697

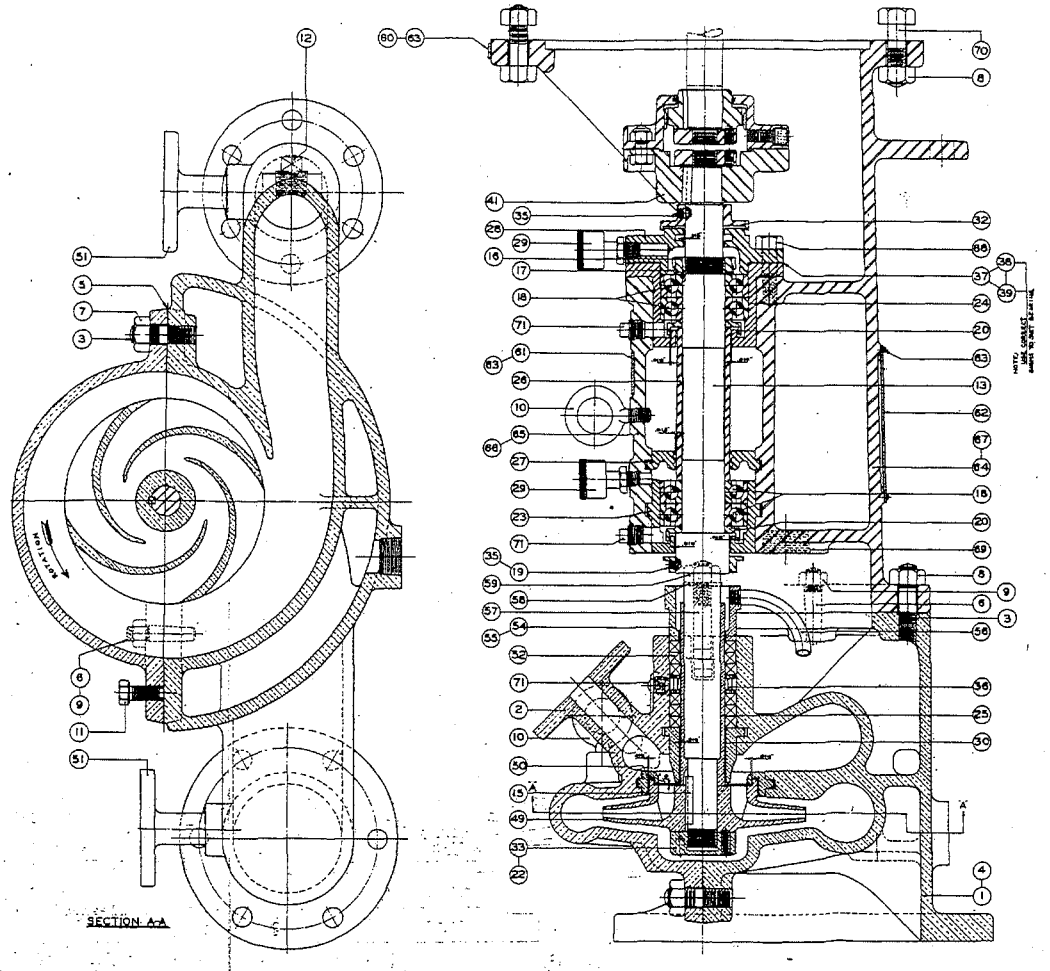

1 Case
2 Cover
3 Stud
4 Stud
5 Gasket
6 Dowel Pin
7 Nut
8 Nut
9 Nut
10 Eyebolt
11 Jack Screw
12 Pipe Plug
13 Shaft
15 Key
18 Lock-nut
17 Lock Washer
18 Ball Bearing
19 Deflector
20 Grease Guard
21 Set-screw
22 Set-screw
23 Bearing Housing
24 Bearing Housing
25 Shaft Sleeve
26 Spacer
27 Grease Guard
28 End Cover
29 Grease Cup
30 Throat Bushing
32 Deflector
33 Lock-nut
35 Set-screw
36 Lantern Ring
37 Shim
38 Shim
39 Shim
41 Coupling
49 Impeller
50 Wearing Ring
51 Flanged Nipple
52 Packing
54 Packing Gland
55 Screw
56 Drain Pipe
57 Gland Stud
58 Washer
59 Nut
60 Rotation Arrow
61 Instruction Plate
62 Name Plate
63 Screw
64 Bracket
65 Bearing Cap
66 Dowel Pin
67 Bolt
68 Bolt
69 Pipe Plug
70 Bolt
71 Pipe Plug

Fig. 5. General Assembly of Pump

BPI-07.08-Hawaii 003698

emerges. The stuffing box contains six rings of packing and a lantern ring arranged as shown in Fig. 5 so that the lantern ring registers with a 1/4" pipe tapped opening in the side of the stuffing box. The packing is 5/16" square in cross section, cut to fit a 1 1/4" shaft.

The packing gland is split vertically along the center line to facilitate removal, and the gland studs are so attached to the casing that they can be swung clear of the gland when the nuts are backed off slightly. The two sections of the gland are bolted together in accordance with Navy Specifications to form in effect a solid ring for setting up the packing.

Packing should be installed so that the joints of abutting rings are staggered, and care should be taken not to set the gland up too tight. Excessive gland pressure on the packing causes scoring of the shaft protecting sleeve and rapid deterioration of the packing itself. Proper adjustment is indicated by a slight leakage of water from the gland.

Bearings

Each of the bearings consists of two single row, duplex mounted, angular type ball bearings installed with the wide faces of their outer races abutting as shown in Fig. 5. The upper bearing is mounted with the outer races secured so that it locates the rotor axially, while the other bearing is free to float axially in its housing.

Light press fits as defined in Appendix One, Navy Specification 42B5 are employed for mounting the bearings on the shaft. The bearings are secured by a lock-nut which in turn is secured by a pronged lock washer all as illustrated in Fig. 5.

Grease which conforms to Navy Department Specification 14L3, Grade B, should be used as the bearing lubricant. Each bearing compartment is provided with a grease cup and a drain outlet which is fitted with a pipe plug. When the grease is renewed, the drain plugs should be removed and fresh grease should be injected through the grease cup until all of the old grease has been forced out through the drains. Then, before the drain plugs are replaced, the pump should be operated for a few minutes so that excess grease can work its way out of the housing. In this connection, it should be noted that too much grease causes overheating.

Coupling

The pump rotor is connected to the motor shaft by an all-metal flexible coupling of the single engagement, gear type which is a product of the John Waldron Corporation, New Brunswick, N. J.

Fig. 6 shows the coupling details. Taper fits are used for mounting the driving and driven members on their respective shafts, and the parts are secured by keys and lock-nuts. The latter in turn are secured by set-screws.

A high grade oil having the characteristics indicated by Navy Symbol 5190 should be used as the coupling lubricant. The coupling should be completely filled with oil before the unit is started for the first time, and fresh oil should be added at regular intervals to insure an ample supply at all times. The oil hole plugs should always be replaced and tightened securely after oil has been added.

At least twice a year, the coupling should be opened, cleaned, and refilled with fresh oil.

BPI-07.08-Hawaii 003699

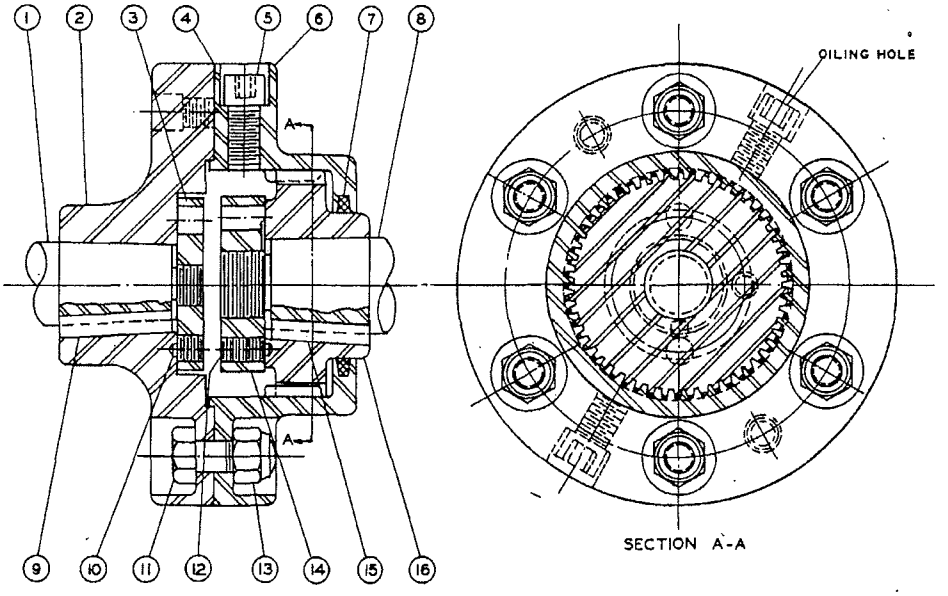

1	Pump Shaft	5	Plug	9	Key	13	Elastic Stop Nut
2	Hub	6	Ring Gear	10	Set-screw	14	Lock-nut
3	Lock-nut	7	Oil Seal	11	Bolt	15	Key
4	Gasket	8	Drive Shaft	12	Set-screw	16	Hub Gear

Fig. 6. Coupling

Pump Case Vent

The suction compartment is provided with a 1/2" flanged vent opening (see Fig. 2) which should be connected to the deaerating feed tank through a constantly rising pipe not less than 1/2" in size. The connection should be fitted with a stop valve.

Pump Case Drains

The stuffing box drip well has a 3/4" pipe tapped opening which should be piped without a valve to the bilge or some other point of atmospheric pressure.

A 1/2" drain outlet fitted with a pipe plug is provided at the lowest point in the casing for draining the pump.

Both of these drains are shown in Fig. 2.

Operation

Before the unit is started for the first time, it should be ascertained that the motor is wired for rotation in the direction indicated by the arrow on the bracket between the pump and the motor. Also, it should be ascertained that the ball bearings are adequately supplied with grease and

BPI-07.08-Hawaii 003700

that the coupling contains sufficient oil.

The pump suction and vent valves should be opened before the unit is started. Never run the pump dry.

Starting involves (1) starting the motor and (2) opening the pump discharge valve.

In service, the pump requires little attention other than an occasional packing gland adjustment which should be made according to the directions given under SHAFT PACKING.

Securing the unit is simply a matter of closing the pump discharge valve, stopping the motor, and then closing the suction and vent valves.

To insure proper lubrication of the ball bearings, the bearing lubricant should be completely renewed at least once every three months.

The unit should be kept clean at all times.

Disassembling and Assembling

The pump can be completely dismantled without the necessity for disturbing the unit mounting, the main pipe connections, or the drive element. It is necessary, however, to break the vent connection before the cover can be taken off.

With the cover off, removal of the rotor involves simply taking off the ball bearing cap, unbolting the bearing housing end cover, taking out the coupling bolts, and withdrawing the rotor from the case.

The procedure to be followed in disassembling the rotor will be clearly apparent from a study of Fig. 5 and the foregoing descriptions of the parts which enter into the assembly.

In the reassembling process, the dismantling operations are reversed.

The ball bearings should be shrunk rather than pressed on the shaft. In this connection, the best practice is to heat a bearing in a mineral oil bath to a temperature approximating but not exceeding 200°F., slip it over the journal, and set it up by means of the lock-nut, tightening the latter as the bearing cools. A new lock washer should always be used to secure the lock-nut.

The shims (37-39, Fig. 5) between the bearing housing end cover and the housing proper should not be overlooked in the reassembling process. The total thickness of the shims should be such that a tight joint is formed between the end cover and the housing when the thrust bearing is clamped securely against the locating shoulder in the bottom of the housing.

A .016" asbestos gasket is used for the joint between the case and the cover.

Tools

Ball Bearing and Impeller Puller - This tool and its applications are shown in Fig. 7. One puller with two adapters (H-215K and H-215L) was furnished with each ship group of units for the earlier ships of the class. On the later ships, only the adapter H-215L was provided by the pump manufacturer. Standard pulling tools furnished by the Navy Department for these

BPI-07.08-Hawaii 003701

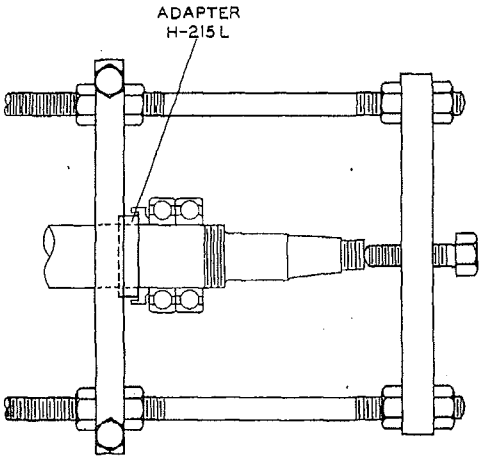

TYPICAL BEARING APPLICATION

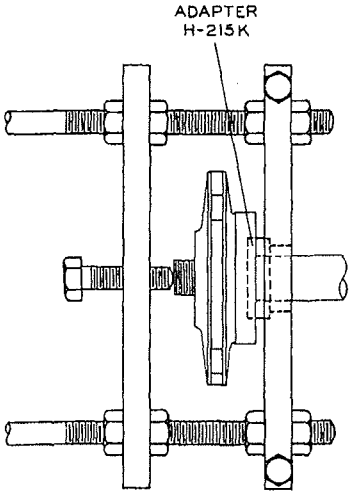

IMPELLER APPLICATION

Fig. 7. Pump Bearing and Impeller Puller

ships are to be used as directed on De Laval plan G-10192, Buships No. DD692-84700-5 in the removal of the bearings and impeller.

Miscellaneous Wrenches - This equipment is listed below.

Make and Type	*Application*	*Quantity/Ship*
De Laval #H-364B Spanner	Bearing Lock-nut (16, Fig. 5)	2
De Laval #K-364 Spanner	Impeller Lock-nut (33, Fig. 5) Coupling Lock-nuts (3 & 14, Fig. 5)	2
1/8" Allen Set Screw Wrench	Lock-nut Set Screws (22 & 35, Fig. 5; 10 & 12, Fig. 5)	2
7/32" Allen Set Screw Wrench	Coupling Oil Hole Plug (5, Fig. 6)	2

Grease Gun Fitting - A standard type grease gun fitting threaded to fit the oiling holes in the motor-pump coupling and suitable for use with any gun having a push type nozzle was also furnished.

Spare Parts

Name or Description	*Part No.*	*Reference*	*Quantity/Ship*
Rotor with Coupling	13-39, 41, 48-50	Fig. 5	1
Bearings	18	" 5	4
Wearing Rings	50	" 5	1
Throat Bushing	30	" 5	1
Lantern Ring	36	" 5	1
Coupling Bolts and Nuts	11, 13	" 6	2 sets
Coupling Oil Seal	7	" 6	2

Repair and Replacement Orders

The handling of repair and replacement orders at the factory will be greatly facilitated if the following directions are carefully observed.

Address orders to the manufacturer whose name appears on the nameplate of the unit for which parts are desired.

Give the serial number of the unit.

Designate the parts required by the part numbers appearing in the instruction book illustrations or the drawings supplied.

Identify the reference. If the instruction book is used, give the number of the book and the number of the illustration from which each part number is obtained. If a drawing is the reference, give the factory number of the drawing.

Specify plainly the number of parts desired.

Give complete shipping directions.

In returning parts to the factory, be sure that each part is tagged with all information necessary to complete identification.

BPI-07.08-Hawaii 003703

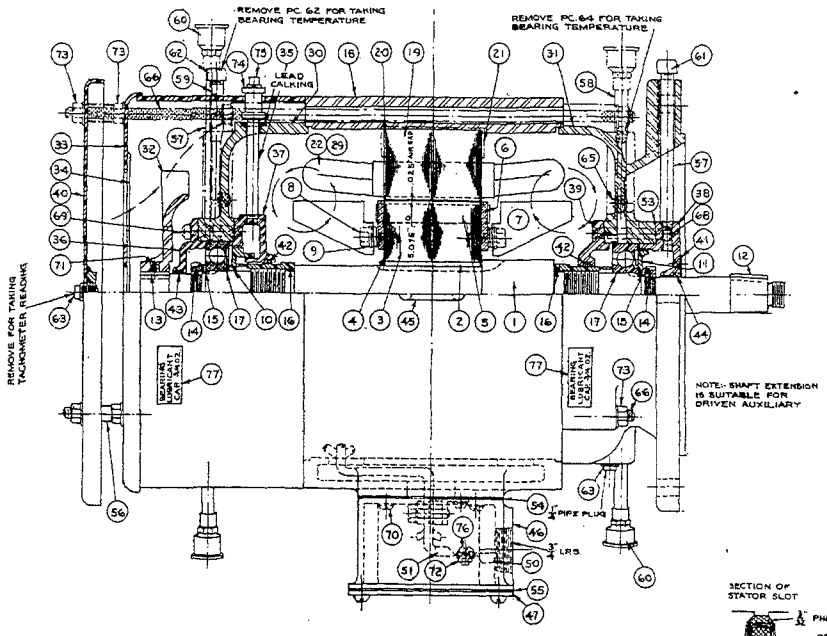

NOTE:
END PLAY ON SHAFT AND/OR OTHER FITS CHECKED BY GAUGE
MAX. END PLAY .005"
MIN. END PLAY .000"

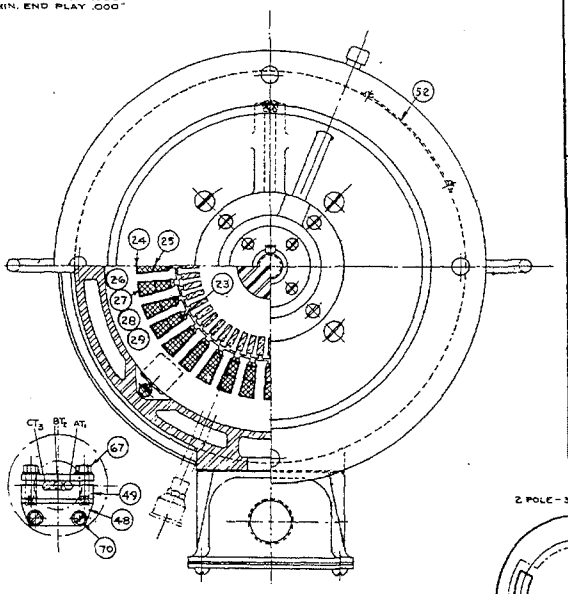

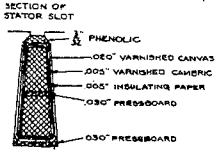

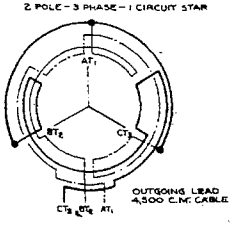

STATOR WINDING DATA		
NUMBER OF POLES	2	
TYPE OF CONNECTION	SEE CONNECTION DIAGRAM BELOW	
NUMBER OF SLOTS	36	
NUMBER OF COILS	36	
GROUPING OF COILS	6	
WINDING PITCH IN SLOTS	1 TO 10	
TURNS IN SERIES PER COIL	26	
CONDUCTOR DIAMETER	1 #16 B.D.	
CONDUCTOR INSULATION	S.C.C. ENAMELED COPPER WIRE	
RES. BETWEEN TERM. OHMS	4.23	
WEIGHT OF COPPER LBS.	12 3/4 LBS.	

TREATMENT OF COMPLETE STATOR

THE GROUP CONNECTIONS ARE INSULATED WITH TWO LAYERS OF 3/4" FRICTION TAPE HALF LAPPED. THE OUTGOING LEAD CONNECTIONS ARE TAPED WITH ONE LAYER OF VARNISHED CAMBRIC TAPE, HALF LAPPED AND TWO LAYERS OF 3/4" FRICTION TAPE HALF LAPPED. STATOR IS THEN DRIED OUT BY BAKING, AND WHILE HOT IT IS DIPPED IN BAKING VARNISH, THEN BAKED. THIS DIPPING AND BAKING IS REPEATED FOUR TIMES.

INSULATION MATERIAL		
	MATERIAL	NAVY SPEC.
SLOT CELL	VARNISHED CANVAS VARNISHED CAMBRIC INSULATING PAPER	NO. SPEC. 17-C-9 17-I-11
TOP WEDGE	PHENOLIC	17-P-5
BOTTOM FILLER MIDDLE FILLER	PRESSBOARD PRESSBOARD	17-I-10 17-I-10
INS. BETWEEN PHASES	VARNISHED CAMBRIC	17-C-8
INS. ON COIL EXT.	LINEN FINISH COTTON TAPE	17-T-15
INS. ON COIL LEADS	VARNISHED CAMBRIC FRICTION TAPE	17-C-8 COMM.
COMPLETED STATOR	BAKING VARNISH	52-V-13

1	Rotor Shaft	12	Key	23	Wedge	34	Screen	45	Eyebolt	56	Spacer	68	Cap Screw
2	Rotor Key	13	Fan Key	24	Bottom Filler	35	Pipe	46	Conduit Box	57	Pipe	69	Cap Screw
3	Rotor Core Plate	14	Lock-nut	25	Middle Filler	36	Upper Outside Cap	47	Cover	58	Pipe	70	Screw
4	Rotor Core Support Plate	15	Lock Washer	26	Slot Cell	37	Upper Inside Cap	48	Lead Clamp Support	59	Pipe	71	Set-screw
5	Rotor Bar	16	Bearing Removal Nut	27	Slot Cell	38	Lower Outside Cap	49	Lead Clamp	60	Grease Cup	72	Nut
6	Rotor End Ring	17	Ball Bearing	28	Slot Cell	39	Lower Inside Cap	50	Solderless Lug	61	Pipe Cap	73	Nut
7	Internal Fan Blade	18	Stator Frame	29	Phase Strip	40	Dripproof Hood	51	Solderless Lug	62	Pipe Cap	74	Pipe Coupling
8	Cap Screw	19	Stator Core Plate	30	Upper Housing	41	Seal Plate	52	Name Plate	63	Pipe Plug	75	Pipe Plug
9	Spacing Washer	20	Stator Core Support Plate	31	Lower Housing	42	Felt Seal	53	Gasket	65	Vent Plug	76	Screw
10	Upper Grease Retainer	21	Stator Core Clamp	32	External Fan	43	Felt Seal	54	Gasket	66	Stud	77	Capacity Plate
11	Lower Grease Retainer	22	Stator Coil	33	Fan Cover	44	Felt Seal	55	Gasket	67	Cap Screw		

Fig. 8. General Assembly of Motor

BPI-07.08-Hawaii 003704

MOTORS

General Design

The assembly details of the motor and the stator winding diagram are shown in Fig. 8, along with stator coil winding data and data on insulation materials and treatments. The manufacturer's specifications follow.

(A) Identification

Manufacturer - Electro-Dynamic works of the Electric Boat Company
Manufacturer's Type and Class - Totally Enclosed, AT-224
Navy Contract or Shipbuilder's Orders - See Electro-Dynamic Drawing D-38207
Installed on - See Electro-Dynamic Drawing D-38207
Driven Auxiliary - Auxiliary Feed Booster Pump
Manufacturer of Driven Auxiliary - De Laval Steam Turbine Company, Buffalo Pumps, Inc.
Reference Specifications - The motors described hereunder will conform strictly with Navy Specifications 17M10 (INT) of the issue in effect Sept. 1, 1940 including Amendment #4 thereto.

Reference Drawings

Title of Drawing	*Manufacturer's No.*	*BuShips No.*
Motor Assembly, Outline, and Specifications	D-38207	DD692-S4700-300
Driven Auxiliary	G-10188	DD692-S4700-1
Controller	922-1-1M1	94104-S6307-1657

(B) Manufacturer's Descriptive Data

Motor Classification

Degree of Enclosure - Totally Enclosed
Method of Cooling - Fan Cooled
Speed Class - Constant Duty Classification - Continuous
Voltage - 440 Frequency - 60 Cycles
Number of Phases - 3
Type - KNQ - Squirrel Cage Ind.
RPM (Syn) 3600 (FL) 3500
Torque Classification - Normal No. of Poles - 2
Current Classification - Normal Starting Current
Ambient Temp. - 50C Class of Insulation - A
Temperature Rise - Table IV, Method #1 & #2 concurrently
Mounting - Vertical
Type of Electric Brake and Torque Rating - None

Motor Rating

Horsepower - 2.75

Formula HP = $\dfrac{0.95 \times \left(1.05 + \dfrac{1.35}{0.95 + 3}\right)}{0.38} = 3.48$ HP (not used)

Load Limit HP - 2.75 (used)

Note: Above formula is based on characteristic curves of driven auxiliary shown on De Laval plan G-10193

BPI-07.08-Hawaii 003705

Performance (See Fig. 9)

Loads	Amperes	Efficiency	Power Factor
(A) Locked Rotor (Starting Cond)	30	—	47%
(B) Guaranteed 4/4	3.9	80%	87%
(C) Guaranteed 3/4	3.21	77%	82%
(D) Guaranteed 1/2	2.57	72%	73%

(E) Starting Torque - Not less than 175% full load torque
(F) Pullout Torque - Not less than 300% full load torque

Weights

(A) Motor Complete - 226 lbs
(B) Rotor Complete - 23 lbs
(C) All Spares Boxed, including control spares - 88 lbs

Shaft, Bearings and Lubrication

(A) Shaft Material - Forged Steel 49-S-2
(B) Type of Bearings - Ball
(C) Ball Bearing Identification - Navy Type G, Class B, Grade 11 Manufacturer #7606
(D) Type of Lubrication - Grease, Navy Symbol 14-L-3b, Grade B
(E) Bearings are approved by ball bearing manufacturer as required by Par. 7(C), Appendix 1 of Navy Specification 42-B-5

Stator Core

(A) Inside Diameter - 5.125"
(B) Core Length - 2 3/4"
(C) Air Gap - .025"

Rotor Core

(A) Outside Diameter - 5.075"
(B) Number of Bars - 49
(C) Material of Bars - Copper
(D) Size of End Ring - 3/16" x 1 3/8"
(E) Material of End Ring - Copper
(F) Construction - Brazed

Exceptions to Navy Specifications - None

(C) The type test report is reproduced in Fig. 10.

Preparation for the Initial Start

1. Before starting the motor, measure the insulation resistance. The insulation resistance at normal operating temperatures should not be less than that given by the following formula:

$$\textit{Insulation Resistance (megohms)} = \frac{3 \times \textit{Rated Voltage}}{\textit{Rating in KVA} + 1000}$$

2. If the insulation resistance is low, dry out the motor. Place the motor in an oven and bake at a temperature of approximately 80°C to 90°C until the insulation resistance becomes nearly constant. During this operation, remove the drain plug from motor bearing bracket. If motor cannot be removed, it should be covered with tarpaulin and dried by use of lamp bulbs or heating units.

BPI-07.08-Hawaii 003706

3. Make sure that the line voltage and frequency are correct (440 volts, 60 cycles).

4. Check all connections with wiring diagram. Also check all connections to controller with connection diagram shown inside controller cabinet.

5. See that rotor turns freely.

6. Operate motor for one hour before putting on load.

Troubles

Motor Fails to Start

Check the voltage at motor terminals. If there is no voltage at motor terminals, check the connections to the controller and the fuses in the controller cabinet.

Check the motor insulation resistance for ground.

Check the resistance between phases for short circuited coil.

The motor may be overloaded. Disconnect the motor from the pump and then start motor. Also see that rotor turns freely.

Heating

Check by thermometer the motor temperature and then check the temperature rise with that shown on the nameplate.

Measure the current in the three phases and compare with the nameplate data. If the current exceeds that shown on the nameplate, the motor is overloaded.

The current in each of the three phases should be approximately the same value. Unequal currents will cause heating. If current in any one of the three phases exceeds the nameplate value, check the terminal voltage. If the voltage in each phase is the same as is on the nameplate, check the stator resistance in each phase for short circuited coil.

See that there is nothing obstructing the entrance or exit of motor cooling air.

Check the room temperature.

Check the amount of grease in the bearings. Too much grease

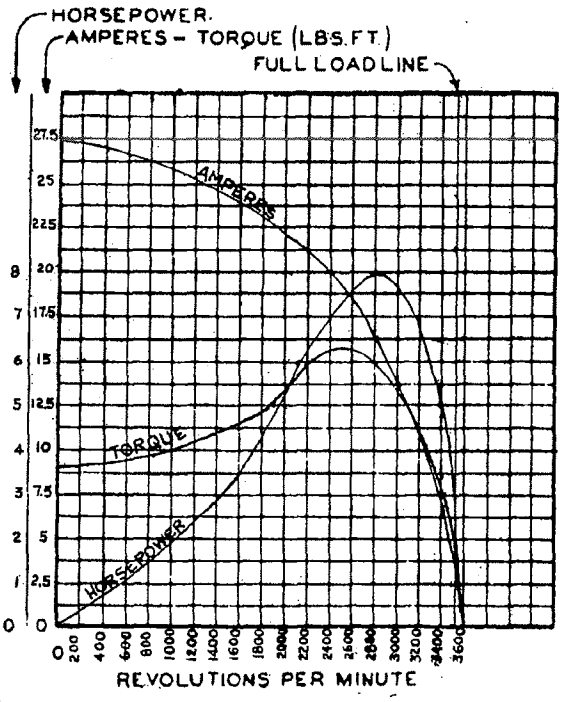

Fig. 9. Typical Motor Characteristic Curves

BPI-07.08-Hawaii 003707

will cause heating of the bearings. Also make sure that the proper type of grease is being used (Navy Symbol 14-L-3b, Grade B).

Check the alignment and air gap.

Operation at Wrong Speed

Check the line voltage and frequency.

Check the load on motor. Overload will cause the motor to operate at a speed lower than that shown on the nameplate.

Check the rotor for loose connections or open circuit.

(C) TYPE TESTS

TO BE MADE ONLY ON SELECTED MOTORS REFER TO SPECIFICATION 17-M-10

EFFECTIVENESS OF ENCLOSURE SATISFACTORY

EFFICIENCY

I SQUARED R LOSSES IN WINDINGS	121
BEARING FRICTION AND WINDAGE	60
CORE LOSSES	181
CALCULATED EFFICIENCY AT 1/2 LOAD	77.0%
3/4 LOAD	82.0%
4/4 LOAD	84.0%

MOTOR TORQUE

STATIONARY VOLTS	STATIONARY AMPS.	STATIONARY FT. LB.	PULL OUT VOLTS	PULL OUT AMPS	PULL OUT FT. LBS.
440	27.2	9	440	19.7	15.7
400	24.2	7 1/2			
360	22.0	5 7/8			
320	19.6	4 7/8			
280	16.0	3 3/8			
240	13.7	2 1/2			
200	11.6	1 3/4			
160	9.6	1 1/8			
120	6.8	5/8			

HEATING

NORMAL LOAD HEAT RUN

TIME	LINE VOLTS	STATOR AMPERES A	STATOR AMPERES B	STATOR AMPERES C	TEMPERATURE BY THERMOMETERS * NO. 1	NO. 2	NO. 3	NO. 4	NO. 5	NO. 6	ROOM
3:00	440	3.61	3.60	3.61							
"	"	"	"	"							
"	"	"	"	"							
"	"	"	"	"							
"	"	"	"	"							
"	"	"	"	"							
"	"	"	"	"							
6:00	440	3.61	3.60	3.61							
TEMP. RISE DEGREES C WHILE RUNNING											
TEMP. RISE DEGREES C AFTER SHUT-DOWN					14	15	12	29	13.5	10	29

* LOCATION OF THE NUMBERED THERMOMETERS IN THE TABLE (NORMAL LOAD HEAT RUN) ABOVE SHOULD BE INDICATED

NO. 1 CORE NO. 2 F.E. COIL NO. 3 F.E. COIL NO. 4 ROTOR NO. 5 P.E. BRG. NO. 6 F.E. BRG.

POWER FACTOR

% LOAD	FIELD AMPS (SYN. MOTOR)	STATOR AMPERES A	STATOR AMPERES B	STATOR AMPERES C	FREQUENCY	WATTS	POWER FACTOR %	R.P.M.	
1/2		2.33	2.31	2.32	60	1338	75.5	3560	
3/4		2.87	2.85	2.86	60	1882	83.8	3540	
4/4		3.61	3.60	3.61	60	2442	89.0	3520	
5/4		4.24	4.23	4.24	60	3020	93.5	3500	

(INSPECTOR'S SIGNATURE) Louis Guanz - Asst Inspector

(OFFICE) Inspector of Naval Material, New York DATE 9/7/43

Fig. 10. Motor Type Test Report

BPI-07.08-Hawaii 003708

Vibration

Vibration may be caused by misalignment, worn bearings, sprung shaft, short circuited coil, unbalanced current, or vibrating foundation.

All causes for vibration should be checked before rotor balance weights are moved.

Insulation Failure

Insulation failure may be caused by oil or water soaked windings, excessive vibration, wrong voltage, or mechanical abrasion.

The high potential test for a repaired motor should be one half that of a new machine. (See paragraph 1 under "Preparation for the Initial Start".)

Maintenance

General

If the motor is not to be put in operation immediately, it should be stored in a clean and dry location. In order to give additional protection, the motor should be covered to prevent damage. It should be protected from low temperatures and sudden changes in temperature or humidity. If it is in a cold or damp location for any period of storage, the shaft should be revolved at least every two weeks so that the bearings will be protected during the period of storage.

The interior and exterior of the machine should be kept clean. Dirt and grease must not be allowed to accumulate either inside or outside of the machine.

The drain plug in the bottom of the motor should be removed at least once a month. Also, the motor should be protected against sudden changes in temperature which might cause condensation.

The insulation resistance should be checked at regular intervals in accordance with the Engineering Manual.

Care of Windings

The windings must be kept clean. Dirt and grease must not be allowed to accumulate.

If dirt and grease do accumulate, the windings should be cleaned with carbon tetrachloride.

If the insulation resistance is low, clean the windings and connections thoroughly. Then dry for several hours until the insulation resistance becomes constant. Coat the windings and adjacent parts with high grade, air drying varnish. Never apply varnish over damp or dirty parts. Do not depend on insulating varnish alone to increase the insulation resistance. Clean the parts and repair any defects first.

Disassembling and Assembling

To Disassemble the motor:

(1) Take out all grease pipes and bearing temperature pipes.

(2) Remove the nuts from the stator frame studs on the fan end.

BPI-07.08-Hawaii 003709

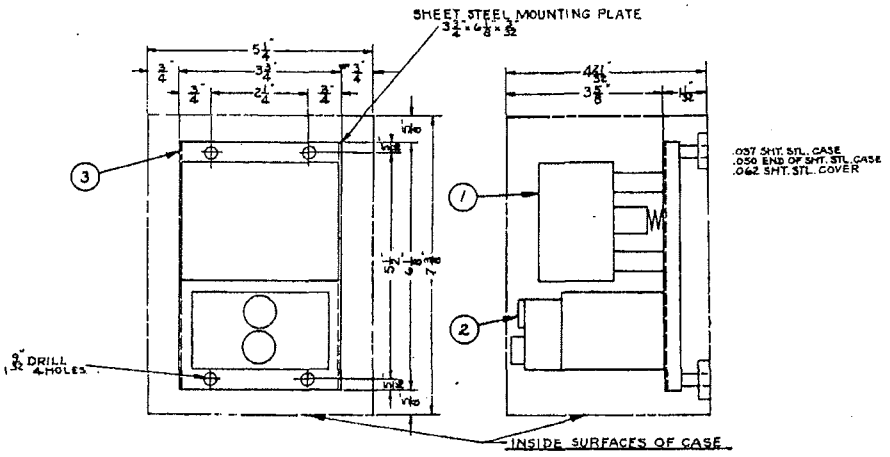

PANEL OUTLINE

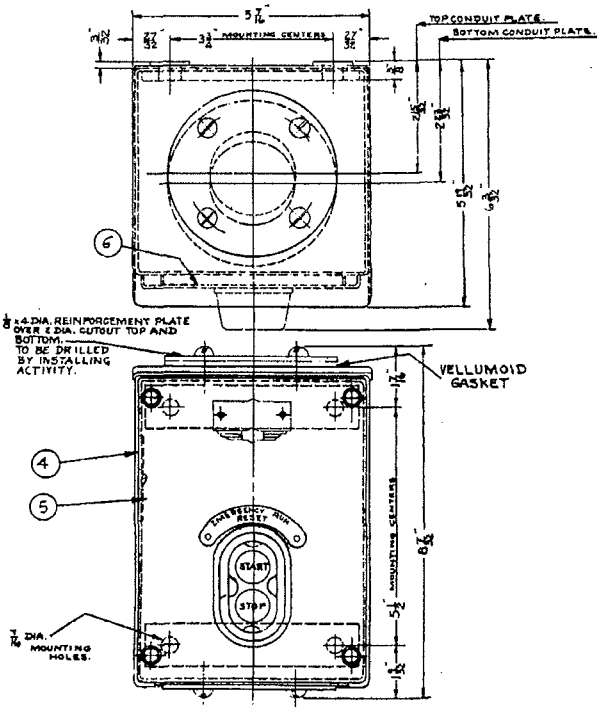

ENCLOSURE OUTLINE

1 Manual Contacts
2 Operating and Overload Trip Mechanism
3 Mounting Plate
4 Enclosure
5 Name Plate
6 Controller Diagram

Fig. 11. Outline and General Assembly of Motor Controller

BPI-07.08-Hawaii 003710

(3) Draw off the fan cover and splash proof hood.

(4) Loosen socket head set-screw in fan hub and remove fan.

(5) Take out cap screws around bearing hub in both bearing housings. This frees both inside bearing cartridges.

(6) Remove fan end bearing housing.

(7) Draw rotor out.

(8) Draw out stator studs.

(9) Remove drive end bearing housing.

To reassemble the motor, reverse the above procedure.

Spare Parts

Name or Description	*Part No.*	*Reference*	*Quantity/Ship*
Ball Bearing	17	Fig. 8	2
Felt Seals	42-44	" 8	12
Stator Coil	22	" 8	36
Slot and Winding Insulation	23-29	" 8	1 set

Note: All parts listed are classified "aboard spares".

Repair Orders

Repair parts should be ordered according to the directions given on page 17.

CONTROLLERS

General Design

The general design of the control equipment is shown in Fig. 11. Fig. 12 is the wiring diagram. Manufacturer's descriptive data and specifications are given below.

A. Manufacturer - Cutler-Hammer, Inc.

B. The equipment is in accordance with Navy Department Specification 17C10.

C. Exceptions to Navy Department Specification 17C10 and referenced specifications - 60 second max. reset time for overload mechanism in lieu of that specified in 17R6.

D. Descriptive Data of Controller

1. Enclosure - Dripproof
2. Rating - 440 volt, 7.5 HP, 3 phase, 60 cycles, size 1
3. Operation - Manual
4. Type - Across-the-line
5. Function - Motor Starting

BPI-07.08-Hawaii 003711

6. Duty - Continuous
7. Protection - Low Voltage Release Effect
   Overload Protection - Emergency Run
8. Performanced - Non-automatic
9. Service - A
10. Ambient - 40 C or 50C
11. Insulation - Class A

E. Descriptive Data of Associated Equipment - None

F. Descriptive Data of Overload Mechanism

1. Type - Thermal (Solder Pot)
2. Compensation - Change in Rating does not exceed 5% for each 10°C change in ambient between 20°C and 70°C
3. Adjustability - Adjustable from 90% to 110% of relay rating
4. Type of Reset - Hand (from START button)
5. Resetting Time - 60 seconds or less when tripped at 150% rating (40 C ambient)
6. Operating - Melting of metal in solder pot causes latch to release contacts
7. Enclosed Rating of Coil - 6.21 amps.
8. Motor Rating - Minimum 5.17 amps, maximum 5.55 amps.

G. Weights - Controller 9 lbs.
Spares (Unboxed) 1/4 lb.

Preparation for the Initial Start

Before the equipment is put in service for the first time, the cover of the controller should be removed and the wiring carefully checked to see that it is in agreement with the wiring diagram on the back of the cover. Also, the heater coils should be checked to make sure that they are properly centered about the thermal element.

When it has been definitely ascertained that the above details are correct, the cover can be replaced and the controller is ready for operation.

Operation

To start the motor, press the START button. This operates through a toggle mechanism to cause the contacts to close and connect the motor across the line. Pressing the STOP button reverses the toggle mechanism action and stops the motor.

When an overload occurs, the overload mechanism will trip and cause the contacts to open. Resetting of the mechanism is inherent with pressing of the START button to restart the motor.

For EMERGENCY RUN, hold down START button. This will maintain contacts closed regardless of overload conditions.

In the event of a voltage failure, the contacts will not drop out, and a return of power will cause the motor to start automatically.

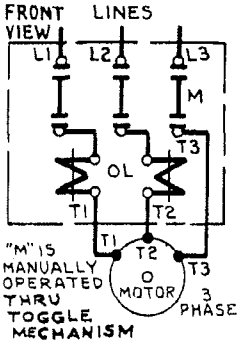

Fig. 12. Motor Controller Wiring Diagram

BPI-07.08-Hawaii 003712

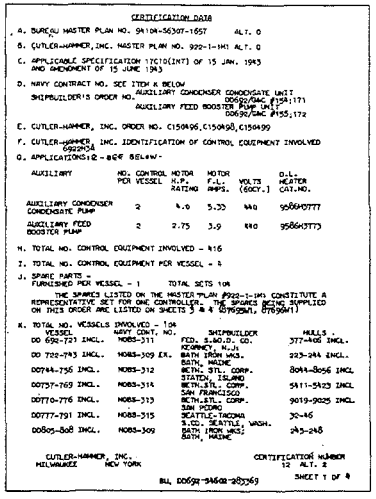

CERTIFICATION DATA

A. BUREAU MASTER PLAN NO. 9A10A-56307-1657 ALT. 0

B. CUTLER-HAMMER, INC. MASTER PLAN NO. 922-1-1M1 ALT. 0

C. APPLICABLE SPECIFICATION 17C10(INT) OF 15 JAN. 1943 AND AMENDMENT OF 15 JUNE 1943

D. NAVY CONTRACT NO. SEE ITEM K BELOW
SHIPBUILDER'S ORDER NO. AUXILIARY CONDENSER CONDENSATE UNIT D0692/DAC #155;171
AUXILIARY FEED BOOSTER PUMP UNIT D0692/DAC #155;172

E. CUTLER-HAMMER, INC. ORDER NO. C150498,C150498,C150499

F. CUTLER-HAMMER, INC. IDENTIFICATION OF CONTROL EQUIPMENT INVOLVED 6922M54

G. APPLICATIONS(2 - SEE BELOW)-

AUXILIARY	NO. CONTROL PER VESSEL	MOTOR H.P. RATING	MOTOR F.L. AMPS.	VOLTS (60CY.)	D.L. HEATER CAT.NO.
AUXILIARY CONDENSER CONDENSATE PUMP	2	4.0	5.32	440	9586H3777
AUXILIARY FEED BOOSTER PUMP	2	2.75	3.9	440	9586H3773

H. TOTAL NO. CONTROL EQUIPMENT INVOLVED - 416

I. TOTAL NO. CONTROL EQUIPMENT PER VESSEL - 8

J. SPARE PARTS -
FURNISHED PER VESSEL - 1 TOTAL SETS 104
THE SPARES LISTED ON THE MASTER PLAN 922-1-1M1 CONSTITUTE A REPRESENTATIVE SET FOR ONE CONTROLLER. THE SPARES BEING SUPPLIED ON THIS ORDER ARE LISTED ON SHEETS 3 & 4 (87690M1, 87690M1)

K. TOTAL NO. VESSELS INVOLVED - 104

VESSEL	NAVY CONT. NO.	SHIPBUILDER	HULLS
DD 692-721 INCL.	NOBS-311	FED. S.AND D. CO. KEARNEY, N.J.	377-406 INCL.
DD 722-743 INCL.	NOBS-309 EX.	BATH IRON WKS. BATH, MAINE	223-244 INCL.
DD744-756 INCL.	NOBS-312	BETH. STL. CORP. STATEN ISLAND	8044-8056 INCL
DD757-769 INCL.	NOBS-314	BETH.STL. CORP. SAN FRANCISCO	5411-5423 INCL
DD770-776 INCL.	NOBS-313	BETH.STL. CORP. SAN PEDRO	9019-9025 INCL.
DD777-791 INCL.	NOBS-315	SEATTLE-TACOMA S.CO. SEATTLE, WASH.	32-46
DD805-808 INCL.	NOBS-309	BATH IRON WKS. BATH, MAINE	243-248

CUTLER-HAMMER, INC.
MILWAUKEE NEW YORK

CERTIFICATION NUMBER
12 ALT. 2
BU. DO692-54602-283369
SHEET 1 OF 4

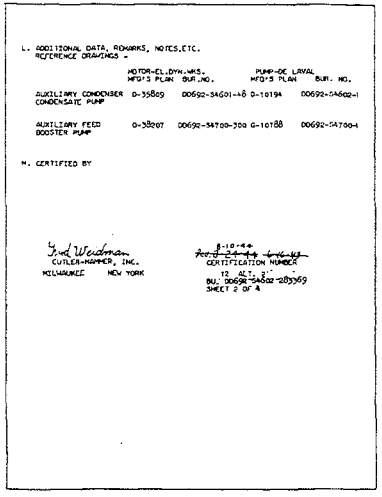

L. ADDITIONAL DATA, REMARKS, NOTES, ETC.
REFERENCE DRAWINGS -

	MOTOR-FLDYN.-WKS. MFG'S PLAN	BUR.NO.	PUMP-DE LAVAL MFG'S PLAN	BUR. NO.
AUXILIARY CONDENSER CONDENSATE PUMP	0-35809	D0692-54G01-A8	0-10194	D0692-54602-1
AUXILIARY FEED BOOSTER PUMP	0-38207	D0692-54T00-300	G-10188	D0692-54T00-1

M. CERTIFIED BY

CUTLER-HAMMER, INC.
MILWAUKEE NEW YORK

8-10-44
CERTIFICATION NUMBER
12 ALT. 2
BU. D0692-54602-283369
SHEET 2 OF 4

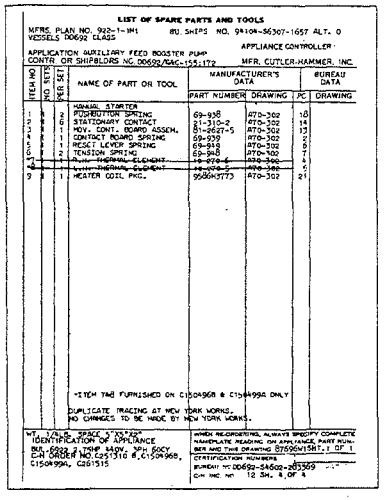

LIST OF SPARE PARTS AND TOOLS

MFRS. PLAN NO. 922-1-1M1 BU. SHIPS NO. 9A10A-56307-1657 ALT. 0
VESSELS DD692 CLASS
APPLIANCE CONTROLLER
APPLICATION AUXILIARY FEED BOOSTER PUMP
CONTR. OR SHIPBLDRS NO. DD692/DAC-155;172 MFR. CUTLER-HAMMER, INC.

ITEM NO	NO SETS PER VESSEL	NO SETS FOR SHIP	NAME OF PART OR TOOL	MANUFACTURER'S DATA PART NUMBER	DRAWING	PC	BUREAU DATA DRAWING
1	1	2	MANUAL STARTER POSITION SPRING	69-938	A70-302	10	
2	1	6	STATIONARY CONTACT	81-310-2	A70-302	14	
3	1	1	MOV. CONT. BOARD ASSEM.	81-2627-5	A70-302	13	
4	1	1	CONTACT BOARD SPRING	69-939	A70-302	2	
5	1	1	RESET LEVER SPRING	69-949	A70-302	6	
6	1	2	TENSION SPRING	69-948	A70-302	7	
7*	1	1	H.O. THERMAL ELEMENT	15-870-6	A70-302	4	
8*	1	1	L.O. THERMAL ELEMENT	15-870-5	A70-302	5	
9	1	1	HEATER COIL PKG.	9586H3773	A70-302	21	

*ITEM 7&8 FURNISHED ON C150498B & C150499A ONLY

DUPLICATE TRACING AT NEW YORK WORKS.
NO CHANGES TO BE MADE BY NEW YORK WORKS.

WT. 1/4LB. SPACE 5"X5"FOR IDENTIFICATION OF APPLIANCE
BUR. ORDER NO. D0692-54602-283369 ALT. 0
C-H ORDER NO. C251310 & C150498B, C150499B, C150499A, C261515

WHEN REORDERING, ALWAYS SPECIFY COMPLETE NAMEPLATE READING ON APPLIANCE, PART NUMBER AND THIS DRAWING 87690M1SHT.1 OF 1
CERTIFICATION NUMBERS
BUREAU NO. D0692-54602-283369 ALT 0
C-H INC. NO. 922-1-1M1 SHT. 1 OF 2

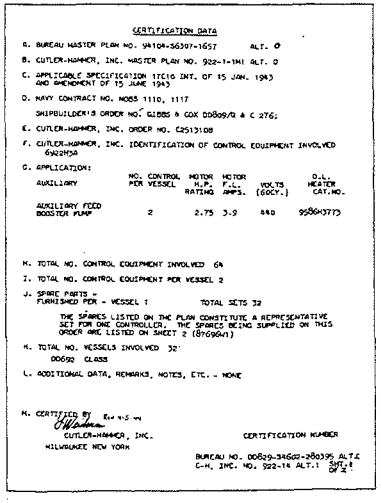

CERTIFICATION DATA

A. BUREAU MASTER PLAN NO. 9A10A-56307-1657 ALT. 0

B. CUTLER-HAMMER, INC. MASTER PLAN NO. 922-1-1M1 ALT. 0

C. APPLICABLE SPECIFICATION 17C10 INT. OF 15 JAN. 1943 AND AMENDMENT OF 15 JUNE 1943

D. NAVY CONTRACT NO. NOBS 1110, 1117
SHIPBUILDER'S ORDER NO. GIBBS & COX D0809/2 & C 276;

E. CUTLER-HAMMER, INC. ORDER NO. C251308

F. CUTLER-HAMMER, INC. IDENTIFICATION OF CONTROL EQUIPMENT INVOLVED 6922M54

G. APPLICATION:

AUXILIARY	NO. CONTROL PER VESSEL	MOTOR H.P. RATING	MOTOR F.L. AMPS.	VOLTS (60CY.)	D.L. HEATER CAT.NO.
AUXILIARY FEED BOOSTER PUMP	2	2.75	3.9	440	9586H3773

H. TOTAL NO. CONTROL EQUIPMENT INVOLVED 64

I. TOTAL NO. CONTROL EQUIPMENT PER VESSEL 2

J. SPARE PARTS -
FURNISHED PER - VESSEL 1 TOTAL SETS 32
THE SPARES LISTED ON THE PLAN CONSTITUTE A REPRESENTATIVE SET FOR ONE CONTROLLER. THE SPARES BEING SUPPLIED ON THIS ORDER ARE LISTED ON SHEET 2 (87690M1)

K. TOTAL NO. VESSELS INVOLVED 32
DD692 CLASS

L. ADDITIONAL DATA, REMARKS, NOTES, ETC. - NONE

M. CERTIFIED BY

CUTLER-HAMMER, INC.
MILWAUKEE NEW YORK

CERTIFICATION NUMBER
BUREAU NO. D0809-54602-280395 ALT.0
C-H, INC. NO. 922-1A ALT.1 SHT.1 OF 2

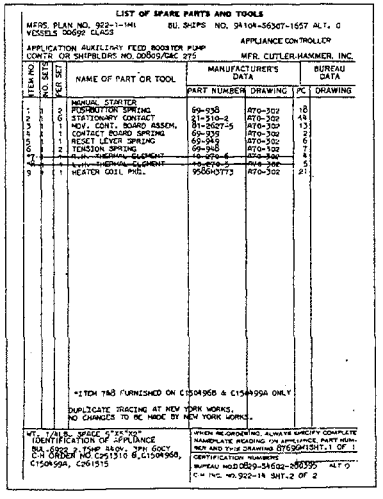

LIST OF SPARE PARTS AND TOOLS

MFRS. PLAN NO. 922-1-1M1 BU. SHIPS NO. 9A10A-56307-1657 ALT. 0
VESSELS DD692 CLASS
APPLIANCE CONTROLLER
APPLICATION AUXILIARY FEED BOOSTER PUMP
CONTR. OR SHIPBLDRS NO. D0809/DAC 275 MFR. CUTLER-HAMMER, INC.

ITEM NO	NO SETS PER VESSEL	NO SETS FOR SHIP	NAME OF PART OR TOOL	MANUFACTURER'S DATA PART NUMBER	DRAWING	PC	BUREAU DATA DRAWING
1	1	2	MANUAL STARTER POSITION SPRING	69-938	A70-302	10	
2	1	6	STATIONARY CONTACT	81-310-2	A70-302	14	
3	1	1	MOV. CONT. BOARD ASSEM.	81-2627-5	A70-302	13	
4	1	1	CONTACT BOARD SPRING	69-939	A70-302	2	
5	1	1	RESET LEVER SPRING	69-949	A70-302	6	
6	1	2	TENSION SPRING	69-948	A70-302	7	
7*	1	1	H.O. THERMAL ELEMENT	15-870-6	A70-302	4	
8*	1	1	L.O. THERMAL ELEMENT	15-870-5	A70-302	5	
9	1	1	HEATER COIL PKG.	9586H3773	A70-302	21	

*ITEM 7&8 FURNISHED ON C150498B & C150499A ONLY

DUPLICATE TRACING AT NEW YORK WORKS.
NO CHANGES TO BE MADE BY NEW YORK WORKS.

WT. 1/4LB. SPACE 5"X5"FOR IDENTIFICATION OF APPLIANCE
BUR. ORDER NO. D0809-54602-280395 ALT 0
C-H ORDER NO. C251310 & C150498B, C150499A, C261515

WHEN REORDERING, ALWAYS SPECIFY COMPLETE NAMEPLATE READING ON APPLIANCE, PART NUMBER AND THIS DRAWING 87690M1SHT.1 OF 1
CERTIFICATION NUMBERS
BUREAU NO. D0809-54602-280395 ALT 0
C-H INC. NO. 922-1A SHT. 2 OF 2

Fig. 13. Controller Certification Data

BPI-07.08-Hawaii 003713

Troubles

Contact Trouble

1. *Overload* - This results in excessive contact heating and short contact life. An overload condition can quickly be determined by placing an ammeter in the circuit.

2. *Low Contact Pressure* - This will result in excessive contact heating. To correct the condition, it is usually necessary to replace springs which have lost their life due to overheating or flashing.

3. *Loose Connections* - This results in excessive heating of the connection.

4. *Insulating Coating on Contact Surface* - Dust, grease, or oxide will insulate contact surfaces. This insulation is usually sufficient only to make the contacts overheat but not enough to prevent the device from closing the circuit. Dust and grease are easily wiped from contact surfaces; whereas operating the device a few times will clean up copper oxide which forms on the face of the contacts. Oxide will form regularly on contacts that are operated too infrequently. Where such trouble occurs, it is usually best to replace copper contacts with silver contacts.

5. *Contact Welding* - This condition can usually be traced to overheating, the common causes of which are enumerated in paragraphs 1-4.

Mechanical Trouble

1. *Vibration* - A rapid wear of parts will result from excessive vibration unless the controller is specifically designed to operate under such conditions. If it is not feasible to remove the controller from the area of vibration, vibration proof mountings should be provided for it.

2. *Abrasive Dust* - Abrasive dust in the controller will cause excessive wear of the moving parts, and frequent inspections should be made to guard against accumulations of this type. When found, they should be removed immediately.

3. *Over-Voltage* - The life of a magnetic controller may be shortened considerably by overvoltage. The magnet of the controller will slam in with great force under this condition thus causing more rapid deterioration of the equipment.

Electrical Trouble

If there is voltage at the motor terminals, and the motor fails to start, look for trouble in the motor. But if there is no voltage at the motor, check the controller to see that all contacts are making. Be sure the distribution line is energized when checking voltage.

If contacts are burned or do not make properly, replace with new ones. Contacts will sometimes become burned from excessive currents on starting.

If overload relay trips only infrequently, the cause is probably due to an overload on the motor and the installation should be checked. If overload relay trips frequently, it can be due to one of the following causes and each one should be investigated:

1. *Faulty or Overloaded Motor*- This can be ascertained by placing an ammeter in the circuit.

BPI-07.08-Hawaii 003714

2. *Incorrect Size of Heater Coil* - First inspect the heater coil; if found all right, compare the current rating of coil with that of the motor. The full load current of the motor should fall within the range of the heater coil.

The overload relay has an adjustment for percentage of full load current. The overload will trip sooner at 90% full load than it will at 100% or 110%. Some adjustment of the heater coil according to the percent of full load current will often eliminate trouble due to tripping. The relay is compensated for change in ambient temperature and there is no necessity for taking that into account when setting the overload in respect to tripping time.

Maintenance

Inspection

Regularly scheduled inspections should be made of all control equipment. These inspections will familiarize the operating personnel with the equipment and may prevent breakdown and serious shutdowns. The frequency of inspection depends upon a number of factors, but a trial will soon indicate the best schedule.

Cleaning

Dust that collects on the working parts of a controller should be removed, preferably with a stream of compressed air. Dust, if allowed to remain on a controller, particularly if it is of an abrasive variety, may cause excessive wear of the moving parts.

Care of Contacts

Contacts should be renewed before their "Wear Allowance" is completely gone. In case copper contacts become badly roughened or burned, they should be smoothed off with a fine file taking care to remove as little copper as necessary. Silver contacts should not be filed except in extreme cases of roughness. A silver contact, even though badly oxidized, will still make good contact.

Care of Insulation

The insulation on wires and coils will sometimes be damaged because of vibration or by rubbing against other parts. Parts with damaged insulation should be reinsulated as soon as the cause is discovered and, wherever possible the cause of the damage should be removed.

Disassembling and Assembling

To disassemble the controller, remove the cover and disconnect the power and motor leads after deenergizing the circuit. Then remove the screws holding the base to back of the enclosing case. When this is done, the complete assembly can be taken out. The assembly is made easily accesible for further maintenance. It is not necessary to remove the assembly to change or adjust the heater coils.

The dismantling procedure is reversed in the reassembling of the controller.

BPI-07.08-Hawaii 003715

Spare Parts

The spare parts furnished for the controller are listed in Fig. 11.

Repair Orders

Repair parts should be ordered according to the directions given on page 17.

BPI-07.08-Hawaii 003716

MEMORANDA

MEMORANDA

MEMORANDA

MEMORANDA

CONTENTS

GENERAL

Composition and General Design . . . . . Page 7
Ratings and Operating Data . . . . . " 7
Guarantee and Acceptance Tests . . . . . " 7
Drawings Supplied. . . . . " 7
Principal Weights. . . . . " 11

PUMPS

General Description. . . . . Page 11
Impeller Mounting. . . . . " 11
Internal Seal. . . . . " 11
Shaft Packing. . . . . " 11
Bearings . . . . . " 13
Coupling . . . . . " 13
Pump Case Vent . . . . . " 14
Pump Case Drains . . . . . " 14
Operation. . . . . " 14
Disassembling and Assembling . . . . . " 15
Tools. . . . . " 15
Spare Parts. . . . . " 17
Repair and Replacement Orders. . . . . " 17

MOTORS

General Design . . . . . Page 19
Preparation for the Initial Start. . . . . " 20
Troubles . . . . . " 21
Maintenance. . . . . " 23

CONTROLLERS

General Design . . . . . Page 25
Preparation for the Initial Start. . . . . " 26
Operation. . . . . " 26
Troubles . . . . . " 27
Maintenance. . . . . " 28

BPI-07.08-Hawaii 003721

MEMORANDA





Instructions 488

Brownell Photo Lithograph Co.
Printers

BPI-07.08-Hawaii 003723