brine circuit may be dictated by the head available from a given size of pump and pump motor. As the fan and pump motor inputs represent a refrigerating load on cooling installations, it is economical to keep them low.

Proper performance of a surface heating or cooling coil depends upon correct choice of the original equipment, and upon certain other factors. The usual coil ratings are based on a uniform face velocity of air. If the air is brought in at odd angles, or if the fan is located so as to block part of the air flow, the performance as given in the manufacturer's ratings cannot usually be obtained. To obtain rated performance it is necessary that the air quantity be adjusted on the job to that used in determining the coil selection, and that it be kept at this value. The most common causes of a reduction of air quantity are the fouling of the filters and collection of dirt in the coils. These difficulties can be avoided by proper design and

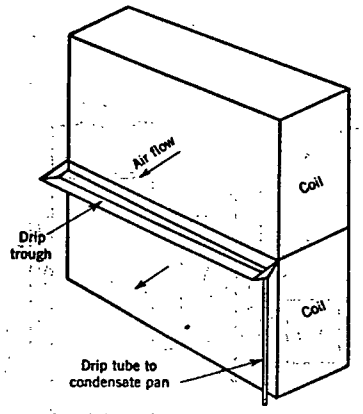

FIG. 10. COIL ARRANGED WITH DRIP TROUGH

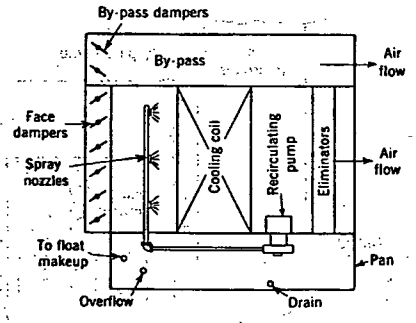

FIG. 11. RECIRCULATING SPRAY SYSTEM FOR CLEANING COILS

proper servicing. There are a number of ways in which coils may be cleaned. A common method is to wash them off with water. They can sometimes be brushed and cleaned with a vacuum cleaner. In bad cases of neglect, especially on restaurant jobs where grease and dirt have accumulated, it is sometimes necessary to remove the coils and wash off the accumulation with steam, compressed air and water, or hot water. The most satisfactory solution, however, is to keep the filters serviced, and thus make the cleaning of the coils unnecessary.

The proper selection of coils requires an understanding of the requirements of each case, and should be based on an economic analysis of the plant design as a whole. No general rule can, therefore, be laid down for the selection of heating or cooling coils. It is possible, however, to point out the limits of usual practice and to indicate the influence of the variables involved in the coil selection.

Heating Coils

Steam and *hot water heating coils* are usually *rated* within these limits:

Air Face Velocity—200 to 1200 fpm, sometimes up to 1500 fpm.
Steam Pressure—2 to 200 psig, sometimes up to 350 psig.

Hot Water Temperature—150 to 225 F.
Water Velocity—2 to 6 fps.

Individual cases may deviate widely, but the tabulation given herewith will serve as a guide to usual *heating installation practice:*

Air Face Velocity—500 to 800 fpm face, 500 being a common figure.
Delivered Air Temperature—varies from about 72 F for ventilation only, to about 150 F for complete heating.
Steam Pressure—2 to 10 psig, 5 psig being common.
Hot Water Temperature—150 to 225 F.
Water Velocity—2 to 6 fps.
Water Quantity—Based on about 20 deg temperature drop through a hot-water coil.
Air Resistance—The total resistance through heating coils is usually limited to from $\frac{3}{8}$ to $\frac{5}{8}$ in. of water gage for public buildings, to about 1 in. for factories.

The selection of heating coils is relatively simple as it involves dry-bulb temperatures and sensible heat only, without the complication of simultaneous latent heat loads, as in cooling coils. For a given duty, entering air temperature, and steam pressure, it is possible to select several arrangements of the same design of coil depending upon the relative importance of space, cross-sectional area, and air resistance.

Cooling Coils

Cooling and *dehumidifying coils* are usually *rated* within these limits:

Entering Air Dry-Bulb—60 to 100 F.
Entering Air Wet-Bulb—50 to 80 F.
Air Face Velocities—300 to 800 fpm (sometimes as low as 200 and as high as 1200).
Volatile Refrigerant Temperatures—25 to 55 F, at coil suction outlet.
Water Temperatures—40 to 65 F.
Water Quantities—2 to 6 gpm per ton, or equivalent to a water temperature rise of from 4 to 12 deg.
Water Velocity—2 to 6 fps.

The ratio of total to sensible heat removed varies in practice from 1.00 to about 1.65, *i.e.*, sensible heat is from 60 to 100 percent of total, depending on the application. (See Chapter 30.) Since required ratios may demand wide variations in air velocities, refrigerant temperatures, and coil depth, general rules as to their values may be misleading. On usual comfort installations air face velocities between 400 and 600 fpm are frequent, 500 being a common value. Refrigerant temperatures ordinarily vary between 40 and 50 F where cooling is accompanied by dehumidification. Water velocities range from 2 to about 6 fps.

When no dehumidification is desired, for which condition the dew-point of the entering air is equal to or lower than the cooling coil surface temperature, the coil selection is made on the basis of dry-bulb temperatures and sensible heat transfer only, the same as with heating coils. It is possible also to choose various arrangements of face area, depth, air velocity, etc., for the same duty.

Dehumidifying Coils

The selection of coils for combined cooling and dehumidifying duty is more involved than for heating or sensible cooling, and requires consideration of both dry- and wet-bulb air temperatures. It is further complicated by the fact that the proportional amount of dehumidification required is also highly variable. The methods outlined in the section, Heat Transfer and Resistance, may be used to determine whether it is possible for a coil to perform the duty required. If entering and leaving air conditions are